Solutia Inc.
702 Clydesdale Avenue
Anniston, Alabama 36201
256.231.8400 phone
256.231.8451 fax

January 22, 2018

SENT VIA FEDERAL EXPRESS

Ms. Pamela Langston Scully
USEPA Region 4
Atlanta Federal Center
61 Forsyth St., SW
Atlanta, GA 30303

Re: Operable Unit-3 Construction Completion Report
Anniston PCB Site (docket No. 1:02-cv-0749-KOB)
Anniston, Alabama

Dear Ms. Langston Scully:

Pharmacia LLC (formerly Pharmacia Corporation) and Solutia Inc. ([Solutia], collectively, P/S) have substantially completed Remedial Action (RA) construction activities in accordance with the Interim Record of Decision (IROD) for Operable Unit-3 (OU-3), dated September 29, 2011, and the Statement of Work (SOW) attached to the Consent Decree (CD) (Docket No. 1:02-cv-0749-KOB). The Prefinal Construction Inspection Report was submitted on May 4, 2017.

The attached Construction Completion Report documents the construction activities and quality assurance performed. Construction Record Drawings documenting the final as-built condition are included in the report.

An anticipated date for the Final Inspection cannot be set at this time as construction activities are not yet complete. The seep interceptor trench and Carbon Treatment System No. 3 (CTS No. 3) are currently being installed. Additionally, the connection (and associated pipe rerouting) to the Anniston Water Works and Sewer Board system for the discharge of treated groundwater from all three new carbon treatment systems will be completed upon the Alabama Department of Environmental Managment's approval of P/S's State Indirect Discharge (SID) permit.

An addendum to this report will be forthcoming upon completion of these remaining items. P/S will notify EPA when these final items have been addressed so that the Final Inspection can be scheduled.

P/S are continuing to work with the EPA to identify the probable source of the seep. On December 5, 2017, P/S and the EPA held a teleconference to discuss a revised path forward for the seep investigation study. P/S are currently preparing a new work plan for this investigation.

Please do not hesitate to contact me at 256-231-8404 if you have any questions or need additional information.

Sincerely,

E. Gayle Macolly Harris
Manager, Remedial Projects

cc: Mr. Chip Crockett (ADEM)
Mr. Thomas Dahl

REPORT

CONSTRUCTION COMPLETION REPORT - REV 0

OU-3 Remedial Action – Anniston PCB Site



Submitted To: Solutia Inc.
702 Clydesdale Avenue
Anniston, AL 36201

Submitted By: Golder Associates Inc.
3730 Chamblee Tucker Road
Atlanta, GA 30341 USA

December 2017 **1302962CQA**

Golder Associates

Golder, Golder Associates and the GA globe design are trademarks of Golder Associates Corporation

ENGINEERING CERTIFICATION

Golder Associates Inc. (Golder) was retained by Pharmacia LLC and Solutia Inc. (collectively, P/S) to provide Construction Quality Assurance (CQA) services during the implementation of the remedial action (RA) construction activities for Operable Unit 3 (OU-3) of the Anniston PCB Site in Anniston, Alabama. These services included the quality assurance monitoring, documentation, and/or testing of the items listed below:

- Subgrade preparation and placement of subgrade grading layer;
- Installation of the 40 thousandths of an inch (mil) (nominal) thick textured high density polyethylene (HDPE) geomembrane;
- Installation of the geocomposite drainage layer;
- Placement of the cover soils and topsoil;
- Placement of the dense graded aggregate (DGA) geocell-reinforced cover system;
- Installation of the concrete cover systems;
- Installation of the stormwater management features;
- Modifications to the groundwater extraction system; and
- Installation of Security Fences.

Based on the field observations, submittal information from the contractor, field testing results, and the data presented herein, it is the professional opinion of Golder that the RA construction activities for OU-3 of the Anniston PCB Site were performed in substantial conformance with the Remedial Design as referenced herein. Modifications that were made during the RA to the Final Remedial Design and the RA Work Plan are discussed in Section 7 of the Construction Completion Report along with why each of these changes was made.

GOLDER ASSOCIATES INC.

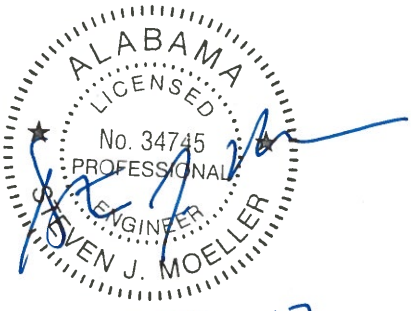

Steven J. Moeller, PE
Principal

12-22-17

Table of Contents

ENGINEERING CERTIFICATION EC-1
LIST OF ABBREVIATIONS 1
1.0 INTRODUCTION 1
1.1 Overview 1
1.2 Organization of the Final Construction Report 2
2.0 SUMMARY OF REMEDIAL DESIGN AND SELECTED ALTERNATIVES 4
2.1 Cover System Components (Alternative S-D, Option 2) 5
2.1.1 Area A 5
2.1.2 Areas C and D 5
2.1.3 Area E 6
2.1.4 South Landfill PCB Cells 6
2.1.5 Autoclave Unit Area 6
2.2 Groundwater System Components (Alternative GW-C) 7
3.0 PROJECT ORGANIZATION AND PRECONSTRUCTION ACTIVITIES 8
3.1 RA Project Organizational Structure 8
3.2 Preconstruction Conference 9
3.3 Initial RA Activities 10
4.0 CONSTRUCTION COMPLETION – ALTERNATIVE S-D (SOIL CAPPING OPTION 2) 11
4.1 Waste Excavation and Disposal 11
4.2 Subgrade Construction Quality Assurance 11
4.2.1 Geomembrane Cover Systems 12
4.2.2 DGA Geocell-Reinforced Cover 13
4.2.3 Concrete Cover System 13
4.3 Geosynthetic Construction Quality Assurance 14
4.3.1 CQA Services 14
4.3.2 Conformance Testing 14
4.3.2.1 Geomembrane Conformance Testing 15
4.3.2.2 Geocomposite Conformance Testing 16
4.3.3 Manufacturers' Quality Control Certification Review 17
4.3.4 Geomembrane Installation 17
4.3.4.1 Overview 17
4.3.4.2 Geomembrane Deployment and Seaming 17
4.3.4.3 Trial Welds 18
4.3.4.4 Geomembrane Non-Destructive Seam Testing 19
4.3.4.5 Geomembrane Destructive Seam Testing 20
4.3.4.6 Defects and Repairs 21
4.3.4.7 Penetration Boots 21

4.3.5 Geocomposite Drainage Layer Installation 22
4.3.6 Anchor Trench 22
4.4 Soil Cover Construction Quality Assurance 22
4.4.1 CQA Services 22
4.4.2 Sourcing And Conformance Testing 23
4.4.3 Soil Cover Installation 24
4.4.4 Perimeter Drainage System 25
4.4.5 Grassing 25
4.5 DGA Geocell-Reinforced Cover Construction Quality Assurance 25
4.5.1 CQA Services 25
4.5.2 Conformance Testing 25
4.5.3 DGA and Geocell Installation 25
4.5.4 Perimeter Toe Protection 26
4.6 Construction Aggregate Quality Assurance 26
4.7 Concrete Construction Quality Assurance 26
4.7.1 Autoclave Unit Area 27
4.7.2 Area A and Area E 28
5.0 CONSTRUCTION COMPLETION - ALTERNATIVE GW-C (EXPANDED GROUNDWATER EXTRACTION WITH MNA) 29
5.1 Waste Excavation and Disposal 29
5.2 CQA Services 29
5.2.1 Well Installation 29
5.2.2 Conveyance Piping 30
5.3 Carbon Treatment Systems (CTSs) 30
6.0 SUMMARY OF RA CONSTRUCTION ACTIVITIES 32
6.1 June 2015 32
6.2 July 2015 32
6.3 August 2015 32
6.4 September 2015 32
6.5 October 2015 32
6.6 November 2015 33
6.7 December 2015 33
6.8 January 2016 33
6.9 February 2016 34
6.10 March 2016 34
6.11 April 2016 35
6.12 May 2016 35
6.13 June 2016 35
6.14 July 2016 36

6.15 August 2016 36
6.16 September 2016 36
6.17 October 2016 36
6.18 November 2016 36
6.19 December 2016 36
6.20 January 2017 36
6.21 February 2017 36
7.0 CHANGES TO THE FINAL RD AND RA WORK PLAN 38
7.1 Cover System Components 38
7.1.1 Area A 38
7.1.2 Areas C and D 38
7.1.3 Area E 38
7.1.4 PCB Cells 39
7.1.5 Autoclave Unit Area 39
7.1.6 Fencing 40
7.2 Groundwater Components 40
7.2.1 IW-26 and IW-27 System 40
7.2.2 IW-28 and IW-29 System 40
7.2.3 Carbon Treatment Systems 41
8.0 REMEDIAL ACTION CONSTRUCTION DOCUMENTATION 42
8.1 Daily Reports 42
8.2 Weekly Progress Meetings 42
8.3 Stormwater Inspection and Maintenance Report Forms 42
8.4 Air Monitoring Data 42
8.5 Construction Material Quantity and Cost Summary 43
9.0 DEFICIENCIES AND WORK REMAINING 44
9.1 Deficiencies from the Prefinal Inspection 44
9.2 Work Remaining 44
10.0 ADDITIONAL CONSIDERATIONS 46
10.1 Health and Safety 46
10.2 Operations and Maintenance 46
11.0 REFERENCES 48

List of Tables

Table 1 Summary of Key Material Quantities
Table 2 Field Density Test Summary of Subgrade
Table 3 Field Density Test Summary of DGA
Table 4 Concrete Break Report Summary
Table 5 Hydrostatic Pressure Test Result Summary

List of Figures

Figure 2.1	OU-3 Site Plan
Figure 2.2	OU-3 Caps and Covers
Figure 2.3	OU-3 Groundwater Extraction System
Figure 3.1	Organizational Structure
Figure 4.1	Area A Panel Layout, Destructive Test Sample Locations, and Repair Locations
Figure 4.2	Area E Panel Layout, Destructive Test Sample Locations, and Repair Locations
Figure 4.3	PCB Cells Panel Layout, Destructive Test Sample Locations, and Repair Locations

List of Appendices

Appendix A	Pre-Final Construction Inspection and Preconstruction Conference Notes
Appendix B	Construction Record Drawings
Appendix C	Monthly Photo Log
Appendix D	Waste Manifests
Appendix E	Subgrade Field Density Tests and Certificates of Subgrade Acceptance
Appendix F	Geomembrane Material Inventory and Conformance Testing
Appendix G	Geocomposite Material Inventory and Conformance Testing
Appendix H	Geomembrane CQA Testing
Appendix I	Geomembrane Destructive Seam Testing
Appendix J	Geomembrane Defect and Repair Logs
Appendix K	Coldwater Mountain Borrow Area Conformance Testing
Appendix L	Topsoil Conformance Test Results
Appendix M	DGA Conformance Test Results
Appendix N	Riprap and Crushed Aggregate Conformance Testing
Appendix O	Soil Cover Thickness Verification
Appendix P	DGA Field Density Testing
Appendix Q	DGA Cover Thickness Verification
Appendix R	Concrete Break Reports
Appendix S	Well Installation Logs and Control Details
Appendix T	Groundwater Treatment System Equipment Information
Appendix U	EPA Correspondence
Appendix V	Contractor Daily Reports and Weekly Meeting Minutes
Appendix W	Stormwater Inspection and Maintenance Report Forms
Appendix X	Air Monitoring Data Reports
Appendix Y	Construction Material Quantity Summary
Appendix Z	Health, Safety, and Environmental Issues

List of Abbreviations

ADEM	Alabama Department of Environmental Management
ALDOT	Alabama Department of Transportation
APCO	Alabama Power Company
AWWSB	Anniston Water Works & Sewer Board
BMP	Best Management Practice
CBMPP	Construction Best Management Practice Plan
CD	Consent Decree
CERCLA	Comprehensive Environmental Response, Compensation and Liability Act
CERCLIS	Comprehensive Environmental Response, Compensation and Liability Information System
CQA	Construction Quality Assurance
CQAP	Construction Quality Assurance Plan
DGA	Dense Graded Aggregate
CTS	Carbon Treatment System
E&S	Erosion and Sediment
EPA or USEPA	United States Environmental Protection Agency
FHWA	Federal Highway Administration
ft	Feet or Foot
ft-msl	Feet Mean Sea Level
GAC	Granular Activated Carbon
Golder	Golder Associates Inc.
HDPE	High Density Polyethylene
ICIAP	Institutional Controls Implementation and Assurance Plan
ICs	Institutional Controls
ICMs	Interim Corrective Measures
IRA	Interim Remedial Action
IROD	Interim Record of Decision
IW	Intercept Well
MUTCD	Manual on Uniform Traffic Control Devices
NPL	National Priorities List
O&M	Operation and Maintenance
OSHA	Occupational Safety and Health Administration
OU	Operable Unit
OU-3	Operable Unit 3
P/S	Pharmacia LLC and Solutia Inc.
PCB	Polychlorinated Biphenyl
Pharmacia	Pharmacia LLC
PNP	4-Nitrophenol, Para-Nitrophenol
POTW	Publicly Owned Treatment Works
PVC	Polyvinyl Chloride

List of Abbreviations

QAPP	Quality Assurance Project Plan
RA	Remedial Action
RAO	Remedial Action Objective
RAWP	Remedial Action Work Plan
RCRA	Resource Conservation and Recovery Act
RD	Remedial Design
RD/RA	Remedial Design/Remedial Action
RDWP	Remedial Design Work Plan
SAS	Superfund Alternative Site
SCS	Soil Conservation Service
Site	Anniston PCB Site
Solutia	Solutia Inc.
SOW	Statement of Work
SWMU	Solid Waste Management Unit
Taylor	Taylor Corporation

1.0 INTRODUCTION

1.1 Overview

Golder Associates Inc. (Golder) prepared this Final Construction Completion Report (Construction Report) on behalf of Pharmacia LLC (formerly Pharmacia Corporation) and Solutia Inc. (Solutia) (collectively, P/S) in accordance with the Consent Decree ([CD] Docket No. 1:02-cv-0749-KOB) between the U.S. Environmental Protection Agency (EPA) and P/S, entered into the U.S. District Court for the Northern District of Alabama (the Court) on April 17, 2013. The CD and the attached Statement of Work (SOW) required P/S to implement a remedial action (RA) for Operable Unit-3 (OU-3) of the Anniston Polychlorinated Biphenyl (PCB) Site (Site) in accordance with the Interim Record of Decision (IROD), dated September 29, 2011 (USEPA, 2011). In addition to the CD and SOW, the RA was implemented in accordance with the Design Criteria and Final Remedial Design (RD) Report submitted to the EPA on January 28, 2015 (Golder, 2015a). The Final RD includes the final design drawings and Technical Specifications that were used to implement the RA. A Draft Remedial Action Workplan (RAWP) was developed to provide for the safe and efficient completion of the RA for OU-3. This report was submitted to the EPA on March 27, 2015, and the EPA approved the work plan with minor comments on April 30, 2015. The Final RAWP was submitted on June 5, 2015 and addressed the comments from the EPA (Golder, 2015b).

This Construction Report was developed in accordance with Task 3 – Remedial Action, Section 7.0 of the SOW, which states that a Final Construction Report shall be submitted to the EPA within 60 days following conclusion of the Final Construction Inspection. According to the SOW, the Final Construction Report shall include, at a minimum, the following:

- Brief description of how outstanding items noted in the Prefinal Inspection were resolved;
- Explanation of modifications made during the RA to the original RD and RA Work Plans and why these changes were made;
- As-built drawings; and
- Synopsis of the construction work defined in the SOW and certification that the construction work has been completed.

The Prefinal Construction Inspection was conducted on February 14, 2017 and included representatives from the EPA, EPA Oversight Contractor, RD and RA Supervising Contractors, Construction Management Team, and the Certifying Engineer. A copy of the prefinal construction inspection report is included as Appendix A. As part of this inspection, the only deficiency in completed work noted by the EPA and P/S was the presence of a few shallow ruts in the soil cover in the northeast corner of Area A as a result of vehicular movement immediately following a period of rainfall. This was addressed by filling in the ruts with soil, lightly compacting the area, and reseeding.

In addition, it was acknowledged that work remaining to be completed includes remedial measures to fully address the seep area located at the PCB cells on the South Landfill and routing of treated water to final permitted Anniston Water Works & Sewer Board (AWWSB) discharge location(s). A summary of how these items have been addressed or are being addressed is included in Section 9.0.

1.2 Organization of the Final Construction Report

This Construction Report is organized and presented as follows:

Section 1.0 – Introduction

Introductory section with an overview of the Construction Completion Report.

Section 2.0 – Summary of Remedial Design and Selected Alternatives

Describes the selected remedy as presented in the Proposed Plan and IROD for the cover system and groundwater system components.

Section 3.0 – Project Organization and Preconstruction Activities

Provides a description of the project organizational chart and individuals involved with construction and a summary of preconstruction activities.

Section 4.0 – Construction Completion – Alternative S-D (Soil Capping Option 2)

Provides a description of the construction activities that were performed to complete the cover systems portion of the RA, and the CQA activities that were conducted to properly document these activities and demonstrate that the work was completed in compliance with the Final RD.

Section 5.0 – Construction Completion - Alternative GW-C (Expanded Groundwater Extraction with MNA)

Provides a description of the construction activities that were performed to complete the groundwater systems portion of the RA, and the CQA activities that were conducted to properly document these activities and demonstrate that the work was completed in compliance with the Final RD.

Section 6.0 – Summary of RA Construction Activities

Provides a monthly timeline of the RA activities and a bulleted description of the construction activities completed.

Section 7.0 – Changes to the Final RD and RA Work Plan

This section describes modifications that were made during the RA to the Final Remedial Design and the RA Work Plan and discusses why each of these changes was made.

Section 8.0 – Remedial Action Construction Documentation

This section includes introductions to the various construction documents and records that were kept as part of routine construction management tasks.

Section 9.0 – Deficiencies and Work Remaining

This section includes a summary of the deficiencies that were noted during the prefinal inspection and describes how these deficiencies have been addressed. This section also describes remaining work.

Section 10.0 – Additional Considerations

This section provides a summary of Health and Safety related issues relevant to the construction effort, as well as an overview of the Operations and Maintenance Plan for OU-3 once the RA is complete.

Section 11.0 – References

A list of references mentioned in this report.

2.0 SUMMARY OF REMEDIAL DESIGN AND SELECTED ALTERNATIVES

OU-3 includes Solutia's manufacturing facility (Facility) and two former landfills (the West End Landfill and the South Landfill) as shown in Figure 2.1. The OU-3 selected remedy, as presented in the IROD, is illustrated in Figures 2.2 and 2.3 and includes the construction of a soil cap and additional impermeable covers in select areas, an expanded groundwater extraction system around the eastern and northern portions of the Facility, the installation of additional perimeter fencing, and implementation of additional institutional controls (ICs). Alternative S-D (Soil Capping Option 2) and Alternative GW-C (Expanded Groundwater Extraction with MNA) were proposed as the preferred alternatives in the Proposed Plan, and, together, they constitute the selected remedy to address contamination at OU-3 of the Anniston PCB Site. The IROD lists the following components as the selected remedy:

1. Installation of a Resource Conservation and Recovery Act (RCRA) Subtitle C cover system over Cells 1E, 2E, and 3E of the South Landfill;
2. Installation of impermeable caps over impacted soils in Areas A and E to eliminate dermal contact, minimize the potential for contaminants in soil leaching to groundwater, prevent erosion, and direct stormwater away from the impacted areas;
3. Installation of a soil cap over impacted soils in Areas C and D to eliminate dermal contact, prevent erosion, and direct stormwater away from the impacted areas (during the RD, this cover was modified to a dense graded aggregate [DGA] cover);
4. Installation of perimeter fencing in the northeast portion of the Facility and along the southern portion of the employee parking lot adjacent to Area H. Additional fencing along the south and west of the diversion berm was also included, although not required by the IROD;
5. Optimization and expansion of the existing groundwater corrective action system to provide further containment of groundwater near OW-21A and Area A (OW-10);
6. Pre-treatment of the extracted groundwater using a carbon filtration system and discharge of flow to the Anniston Publicly Owned Treatment Works (POTW);
7. Operation, monitoring, and maintenance of existing closures, groundwater corrective action systems, interim corrective measures (ICMs), final RA components, and ICs to ensure continued long-term effectiveness of the remedy;
8. Continued enforcement of the Excavation Permit Policy restricting excavations within OU-3; and
9. Implementation of additional ICs, including:
    - Execution of an OU-3 Environmental Covenant with the Alabama Department of Environmental Management (ADEM) to restrict land and groundwater use within OU-3 and the Northside and Eastside Areas (in the vicinity of monitoring wells OW-21A and OW-10).

Following issuance of the IROD, P/S identified elevated levels of PCBs adjacent to the recently constructed Autoclave Unit located within the Facility. Under EPA oversight, P/S developed a sampling plan and conducted delineation sampling. Results of the sampling indicated that soils to the north, south and east of the Autoclave Unit exceeded the Remedial Goal (RG) for PCBs (Golder, 2014). As a result, a RA was required in the area surrounding the Autoclave Unit to address these exceedances. A workplan

describing the proposed remedial action was submitted to the EPA on November 8, 2013, and it was approved by the EPA on November 18, 2013. Although this area was not identified in the IROD as requiring a remedy component, P/S have addressed this area as part of the RA activities.

2.1 Cover System Components (Alternative S-D, Option 2)

2.1.1 Area A

The selected remedy for Area A consists of an impermeable cap to eliminate dermal contact, minimize potential soil leaching to groundwater, prevent erosion, and to direct storm water away from the impacted area. The preferred capping option for the majority of Area A (northern grassy area) was a multi-layer cover system resulting in a grassed final surface, similar to the current existing conditions. The cover consists of the following layers (bottom to top):

- 40 thousandths of an inch (mil) double-sided textured high density polyethylene (HDPE) geomembrane on a prepared subgrade,
- Geosynthetic drainage layer consisting of a 200-mil HDPE geonet heat bonded on both sides to an 8 ounce polyester geotextile, and
- At least 18 inches of cover soil over the drainage layer. The upper 6 inches of cover soil is topsoil capable of sustaining short-rooted vegetation (grass).

The geocomposite drainage layer was installed to route water from the top of the geomembrane to a continuous rip rap outlet located along the northern, southern, and eastern edges of the capped area.

The gravel in the narrow strip west of the parking lot (southern portion of Area A) and much of the perimeter around Area A were covered with a 6-inch concrete cap. The concrete cap was constructed on the existing subgrade and the curb in this area was raised to match the top of grade for the new cap.

2.1.2 Areas C and D

The selected remedy for Areas C and D consists of installing a cover to eliminate dermal contact, prevent erosion, and to direct storm water away from the impacted area. P/S capped this area using 12 inches of DGA material reinforced with geocells. This cover system was selected over a traditional geotextile and soil cover, as proposed by the EPA, due to potential challenges with installing a traditional soil cover over the existing clean coarse gravel surface. This modification was approved by the EPA as part of the RD process. Prior to installing the 12-inch DGA cover, the existing coarse gravel was mixed with imported DGA material to infill the void spaces in the gravel and the blended material was compacted.

This DGA cover system will function similar to a traditional soil cover as the void space between particles in the DGA is small as a percentage of the total volume of material, similar to soil. This DGA cover reinforced with geocells will eliminate dermal contact and prevent erosion of the underlying soil.

Additionally, this type of cover system will reduce maintenance requirements following construction as periodic mowing of the area will not be required.

2.1.3 Area E

The selected remedy for Area E consists of an impermeable cap to eliminate dermal contact, minimize potential soil leaching to groundwater, prevent erosion, and to direct storm water away from the impacted area.

The cover for Area E consists of a multi-layer cap with a grassed final surface, similar to that constructed for Area A. In order to accommodate the cover system within the limited space requirements, a retaining wall extending approximately 24 to 48 inches above the current grades was constructed around the perimeter of Area E to maintain the cover thickness and to capture and control drainage from the cap. Water collected on top of the geomembrane is directed laterally to a perimeter drainage collection system installed along the concrete retaining wall. Water collected within this collection system is routed to an outlet located on the western side of Area E where it drains into the existing Facility stormwater system.

In addition to the geosynthetic cover system constructed within Area E, P/S constructed the foundation for a proposed control building that will occupy the southwest portion of Area E. As part of the control building construction activities, an 8-inch thick concrete foundation was constructed and a minimum 6-inch thick concrete cover was placed over the remaining portion of Area E adjacent to the control building foundation.

2.1.4 South Landfill PCB Cells

As part of the selected remedy for OU-3, a RCRA Subtitle C-compliant cap was constructed in the area occupied by the former PCB cells (1E, 2E, and 3E). The cover system included a 40 mil HDPE geomembrane overlain by a geosynthetic drainage layer (geocomposite) and at least 18 inches of soil, similar to the cover system constructed for Area A. The upper 6 inches of the cover soil consists of topsoil capable of sustaining short-rooted vegetation (grass). The geocomposite drainage layer routes water from the top of the geomembrane laterally to a continuous rip rap outlet around the perimeter of the cover system.

2.1.5 Autoclave Unit Area

Following issuance of the IROD, P/S identified elevated levels of PCBs adjacent to the recently constructed Autoclave Unit. The RA for the Autoclave Unit Area consisted of the removal of approximately 12 inches of impacted soil at the surface and replacement with DGA to provide a stable base, and the construction of a 6-inch thick concrete cover (Golder, 2014).

The surrounding grades of the existing concrete infrastructure were matched with the new cover to maintain drainage patterns and prevent trip hazards in this heavily trafficked part of the Facility. Although this area was not identified in the IROD as requiring a remedy component, P/S constructed a concrete cover over this area as part of the RA activities.

2.2 Groundwater System Components (Alternative GW-C)

The groundwater remedy builds upon the existing groundwater extraction system active at the Site by extending the system in the vicinity of two groundwater impact areas identified near wells OW-21A and OW-10. Two extraction wells were installed in each of the groundwater impact areas (IW-26 through IW-29). The location and spacing of these wells was determined as part of the PDI effort using newly obtained and existing hydrogeologic data.

Pumping systems were installed within each well. The pumping cycle (on/off) for each pump is controlled automatically based on the actual water level in the wells. The wells were equipped with dedicated level sensors and pump controllers. The level sensors for each well were individually set to maintain hydraulic control at and down gradient of OW-10 and OW-21A. The flows from wells IW-26 and IW-27 (adjacent to OW-21A) are measured with a new totalizing flow meter dedicated to these two new wells. While the flows from wells IW-28 and IW-29 (adjacent to OW-10) are combined with the flow from existing well IW-14A and measured with a new totalizing flow meter dedicated for these three wells.

Extracted groundwater undergoes pretreatment using activated carbon, which was designed based on the measured groundwater concentrations from the PDI and the baseline groundwater monitoring event. Separate carbon treatment systems, CTS #1 and CTS #2, were installed for the two groundwater impact areas identified near wells OW-21A and OW-10, respectively.

Treated groundwater from wells IW-26 and IW-27 will be pumped to an existing sanitary sewer manhole located north of the Facility. From the existing manhole, the accumulated groundwater will then be discharged to the City of Anniston POTW[1]. Treated groundwater from wells IW-28 and IW-29 is pumped to an existing lift-station and then discharged to the City of Anniston POTW via Basin 5/6. P/S have an existing State Indirect Discharge (SID) permit for the discharge of effluent from this outfall (Basin 5/6) that allows for the discharge of extracted groundwater.

[1] Due to permitting issues with the Anniston Water Works and Sewer Board, water from CTS #1 is currently stored in a temporary frac tank and hauled to the Facility's permitted sanitary sewer discharge for disposal of the treated water.

3.0 PROJECT ORGANIZATION AND PRECONSTRUCTION ACTIVITIES

3.1 RA Project Organizational Structure

Figure 3.1 below shows the organizational structure for the RA project.

Figure 3.1: RA Project Organizational Structure

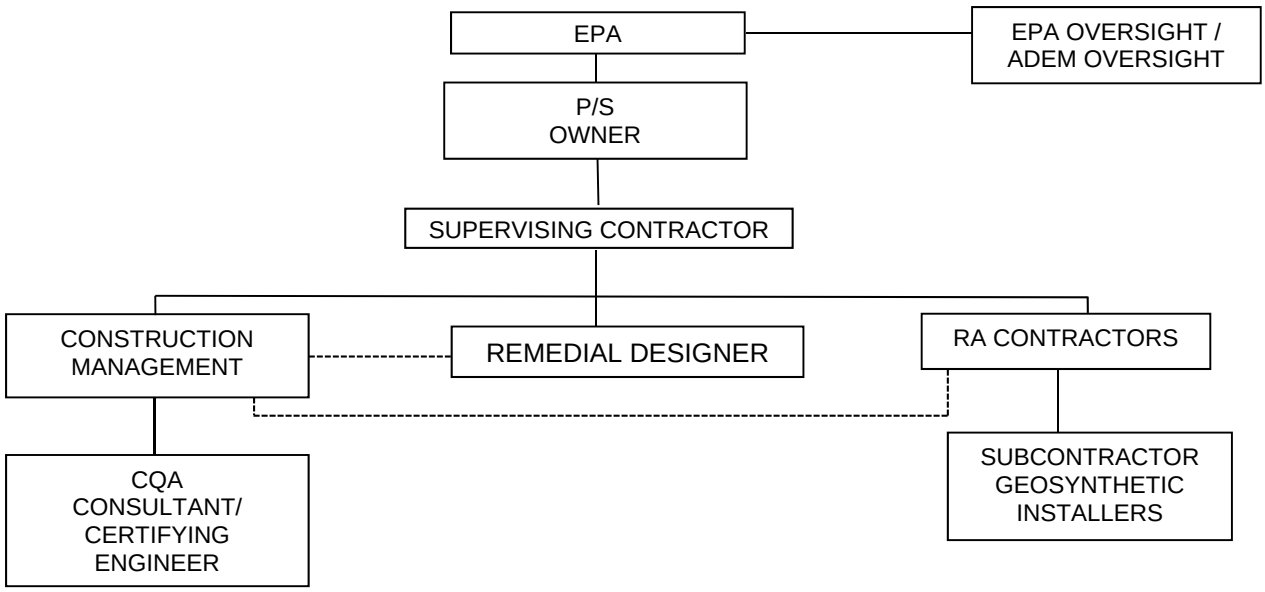

The parties involved in the design, construction and oversight of the cover systems and groundwater systems components, included:

- EPA Oversight
  - Ms. Pamela Langston Scully, P.E., Remedial Project Manager
  - Mr. Tim Turner, Lead Oversight Contractor (J.M. Waller / Versar)
  - Mr. Terence Chuhay, Oversight Contractor (J.M. Waller / Versar)
- ADEM Oversight
  - Mr. Metz Duites
  - Mr. Austin Pierce
- P/S, as the Owner
  - Ms. E. Gayle Macolly Harris, Remedial Project Manager
  - Mr. Johnnie Pearson, Engineering
  - Mr. Michael Price, appointed by P/S as the Supervising Contractor for RA Work (Genesis Project Inc.)
  - Mr. John Loper, P.E., appointed by P/S as Supervising Contractor for RD Work (Loper Group Inc.)

- P/S Construction Management
  - Mr. Donn Williams (Williams Service, Inc.)
  - Mr. Joshua Threadgill (Genesis Project, Inc.)
- Golder Associates Inc., Design Engineer, Certifying Engineer, and CQA Consultant
  - Mr. Steven Moeller, P.E., Lead Design Engineer and Certifying Engineer
  - Mr. Patrick Callahan, P.E., Design Engineer and CQA Field Leader
  - Mr. Andrew Fuggle, Design Engineer and CQA Field Member
  - Mr. Nortey Yeboah, CQA Field Member
  - Mr. Shawn Casey, Geosynthetics and Soils CQA Technician
- Taylor Corporation, RA Contractor for the Cover Systems Project
  - Mr. Lance Taylor, Owner
  - Mr. Ellis Bennett, Project Manager
  - Mr. Jason Joiner, H&S Representative
  - Mr. Mile' Lilio, H&S Representative
  - Plastic Fusion, Geosynthetics Installer (as subcontractor to Taylor Corporation)
- Golder Associates Inc., RA Contractor for the Groundwater Systems Project
  - Taylor Corporation, Lead Subcontractor to Golder
  - Cascade Drilling LP

3.2 Preconstruction Conference

P/S conducted a preconstruction conference on June 8, 2015 before initiation of construction that included the EPA, the EPA Oversight Contractor, ADEM, P/S, P/S construction management team, Golder, and Taylor Corporation. The following topics were addressed at the meeting:

- Define the roles, relationships, and responsibilities of all parties;
- Review methods for documenting and reporting inspection data;
- Review methods for distributing and storing documents and reports;
- Review work area security and safety protocols;
- Review the construction schedule; and
- Conduct a Site reconnaissance to verify that the design criteria and the plans and Technical Specifications are understood and to review material and equipment storage locations.

The preconstruction conference was documented, including the names of people in attendance, issues discussed, clarifications made, and special instructions issued. The meeting notes from the preconstruction conference are included in Appendix A.

3.3 Initial RA Activities

The RA Contractors (Taylor and Golder) prepared and submitted a Contractor Health and Safety Plan/Contingency Plan, Air Monitoring Plan, and Spill Control and Countermeasures Plan. These documents were prepared and submitted to the EPA prior to the RA Contractor mobilizing to the Site. The EPA reviewed the plans to ensure that all necessary elements were included, and that the plans provided for the protection of human health and the environment.

Following the preconstruction conference and submittal of the initial planning documents, the RA Contractor mobilized to the Site and began the installation of temporary facilities such as construction trailers, staging areas, security fencing, equipment decontamination facilities; and the installation of erosion and sediment controls around the areas to be disturbed. Detailed requirements for erosion and sediment control and construction best management practices (BMPs) were presented in the Construction Best Management Practices Plan (CBMPP) included in Appendix A of the RA Workplan. Implementation of the RA within any given work area was not authorized until erosion and sediment controls and BMPs were in place in accordance with the CBMPP.

The RA activities were conducted within Solutia's active facility, and all work was coordinated with P/S plant personnel and conducted in accordance with the facility's Environmental, Health and Safety policies.

4.0 CONSTRUCTION COMPLETION – ALTERNATIVE S-D (SOIL CAPPING OPTION 2)

The following provides a description of the construction activities that were performed to complete the cover systems portion of the RA and the CQA activities that were conducted to properly document these activities and demonstrate that the work was completed in compliance with the Final RD (Golder, 2015a).

The Final RD includes the final design drawings, Technical Specifications, and the Construction Quality Assurance Plan that were used to implement the RA. Details of the completed construction are documented in the Construction Record Drawings (Appendix B) and are referenced below. Additionally, construction photographs depicting the various stages of construction described below are included in Appendix C.

4.1 Waste Excavation and Disposal

Limited excavation of impacted soil was required prior to constructing the cover systems as part of the RA since the caps and covers were constructed above ground with clean imported fill material. However, excavation was required at the Autoclave Unit to remove the upper one foot of soil as required for the selected remedy and excavation was required around the perimeter of Area E for construction of the foundation for the retaining wall. The quantity of material removed from each of these areas was 461 and 67 tons of impacted soil, respectively.

In other portions of the Site, only incidental excavation was required as needed to construct the RA components. A listing of the waste manifests and the location of where the material was generated is included in Appendix D along with a copy of each manifest.

Characterization data were available to determine the proper disposal requirements for the soil excavated. The existing data and generator knowledge was used to determine the disposal procedures for the excavated materials. All soils excavated were contained (lined roll-off containers), staged, and transported to the Chemical Waste Management Facility in Emelle, Alabama, which is a Toxic Substances Control Act (TSCA) and an EPA-approved facility.

P/S notified the EPA prior to transporting soil generated from within OU-3 to an off-Site disposal facility so that the EPA could confirm that the disposal facility was in compliance with applicable federal and state landfill regulations.

4.2 Subgrade Construction Quality Assurance

The activities associated with construction of the subgrade for the different cover systems were monitored by Golder for compliance with the project specifications. This monitoring was required for the following areas:

- Geomembrane Cover Systems
  - Area A
  - Area E
  - PCB Cells
- DGA Geocell-Reinforced Cover
  - Areas C&D
- Concrete Cover System
  - Area A
  - Area E
  - Area H
  - Autoclave Unit

4.2.1 Geomembrane Cover Systems

For Area A, Area E, and the PCB cells, subgrade work included mowing the existing grass flush with the ground surface, applying herbicide to the area, and scarifying the remaining surface with a disc harrow. Soft or unstable areas identified as part of the subgrade preparation activities were addressed by placing a geotextile/gravel bridging layer over the area prior to placing compacted subgrade fill material. In accordance with Section 31 00 01, 2.2 of the Specifications, a 10 ounce per square yard (oz./yd^2) non-woven geotextile overlain by 8 inches of ALDOT No. 24 stone and 4 inches of DGA was used for the bridging layer. The location of the areas that required subgrade improvement/bridging are shown on Sheets 06 (Area A) and 08 (PCB Cells).

An approximate 6-inch thick layer of compacted soil was placed over the existing ground surface at Area A, Area E and the PCB cells. The volume of soil placed as subgrade material within each area is included in Table 1. The subgrade fill material was obtained from the on-Site Coldwater Mountain Borrow Area and the sampling/testing of this material is described in Section 4.4.2. During the placement of this soil layer, Golder personnel observed the soil for consistency and maximum particle size, and periodically measured the depth of the subgrade material.

Compaction of the subgrade layer was performed with a Sakai Pad Foot Roller and a Dynapac smooth drum roller. Field density tests were performed by Golder as required by the project specifications. A total of 27 compaction tests were performed during subgrade placement, which is approximately 2.25 tests per acre.

Table 2 includes a summary of the results of the density testing. As shown in the summary table, nine tests failed to meet the compaction or moisture requirements, but were re-tested once the areas were re-worked or re-compacted. The final subgrade surface was compacted and rolled with a smooth-drum roller such that the final surface was free of irregularities resulting from equipment traffic, rocks and

stones, or desiccation cracks. Appendix E documents the soil density testing for Area A, Area E, and the PCB cells.

Golder observed the subgrade preparation and final surface prior to the installation of the HDPE geomembrane for compliance with the surface preparation requirements of the project specifications. Golder and Plastic Fusion provided written approval of the subgrade prior to geomembrane installation by the liner crew. Subgrade Acceptance Forms for Area A, Area E and the PCB cells are included in Appendix E.

4.2.2 DGA Geocell-Reinforced Cover

Prior to placing the DGA Geocell-Reinforced Cover over Areas C & D, imported DGA material was blended with the existing loose gravel and compacted to provide a firm subgrade for construction of the 12-inch cap. Approximately 4,791 tons of DGA were used to prepare the subgrade as shown in Table 1. During the placement and compaction of this layer, Golder personnel observed the blending of this material into the existing subgrade gravel for consistency. Compaction of this subgrade layer was performed with a sheepsfoot roller and a smooth drum roller. Compaction testing of this layer was not required by the Specifications as the gradation of the material varied significantly based upon how well the material was blended. This layer was blended and compacted to provide a firm base for the overlying DGA cover system.

A reinforcing geotextile (Mirafi HP360 geotextile) was placed in the eastern portion of the Areas C & D (over an approximate 2,050 square foot area) to stabilize a soft subgrade area prior to construction of the cover system and placement of the geocells. The location of the area that required subgrade improvement/bridging is shown on Sheet 07(Area C/D).

4.2.3 Concrete Cover System

Prior to capping the Autoclave Unit with a 6-inch concrete cap, the existing gravel in the area was excavated down to 12 inches in depth and replaced with six inches of compacted DGA. Due to certain obstructions encountered during excavation, some isolated areas were only excavated 6 inches and the concrete cover was placed directly on the excavated surface. As shown on Table 1, approximately 461 tons of material was excavated and hauled off Site for disposal.

The DGA was compacted prior to pouring the concrete cap; however, since this area is located where the use of large construction equipment was not practical, smaller vibrating plate compactors were used to compact this 6-inch lift. Golder personnel observed the excavation activities and the compaction of the DGA layer. Compaction tests are included in Appendix P.

4.3 Geosynthetic Construction Quality Assurance

4.3.1 CQA Services

The CQA monitoring services for geosynthetic material testing and placement provided by Golder included:

- Sample procurement and conformance testing of the geosynthetic materials, including HDPE geomembrane, geosynthetic drainage layer (geocomposite), and geotextile material
- Review of the geosynthetic manufacturers' quality control (QC) certificates
- Visual examination and documentation of geomembrane panels during deployment
- Observation and documentation of geomembrane trial seams and evaluation of the test results
- Observation and documentation of both the fusion and extrusion welded geomembrane seams and seaming procedures
- Observation and documentation of geomembrane seam non-destructive continuity testing
- Performance of geomembrane destructive seam strength laboratory testing and evaluation of test results
- Observation and documentation of geomembrane, geocomposite and geotextile installation
- Observation and documentation of the protective cover, drainage system construction, including installation of the drainage pipes, associated geosynthetics, and rip rap/stone placed above the geomembrane material.

Detailed descriptions of each of the above monitoring duties are presented in the following sections. Copies of the geosynthetic materials inventory spreadsheet, geosynthetic manufacturers' QC certificates, laboratory conformance test results, field CQA data spreadsheets, logs, and geomembrane seam laboratory destructive test results for the geosynthetic components of the cover system are included in Appendices F through J as specified in the following sections.

4.3.2 Conformance Testing

Conformance samples of the geosynthetic materials utilized for the cover system were obtained from the manufacturing plants prior to delivery of the material to the Site. The material roll lists were provided to Golder prior to conformance sampling so that representative samples of the produced materials could be selected in accordance with the sampling frequency requirements of the project specifications. Golder also conducted an inventory of the geosynthetic materials upon arrival at the Site. Lists of the roll numbers of the delivered materials are presented in Appendix F (geomembrane) and Appendix G (geocomposite).

The following geosynthetic materials were delivered to the Site:

- 38 rolls of textured HDPE geomembrane (total of 598,500 square feet)
- 179 rolls of geocomposite drainage material (total of 596,965 square feet)

Details of the conformance testing for the geomembrane and the geocomposite drainage material are included in the sections below.

One roll of geomembrane delivered to Site, roll #108183107, was not previously included in a certification list. This roll replaced roll #108183102 which was not delivered. After review of the certification test data to ensure it met the requirement of the project specifications, Golder approved the use of geomembrane roll #108183107. The conformance testing performed for the Site is representative for this roll, as the roll number is sequential to the rolls tested.

Based on the specified testing frequency for conformance sampling, a total of seven samples of geomembrane and six samples of geocomposite were collected for conformance testing. The conformance sampling was carried out consistent with the requirements outlined in the project specifications. Additionally, samples from the subgrade layer and the soil cover layer were utilized with the geosynthetic materials for stability friction angle testing.

All samples were delivered to the Golder Laboratory for quality assurance testing to determine compliance with project and manufacturer's minimum specifications. The tests were performed in accordance with the standard test procedures defined by the American Society for Testing and Materials (ASTM) and/or as required by the project specifications. Conformance test results and the manufacturer's quality control test results demonstrated that the geomembrane and geocomposite drainage materials met the project specifications.

4.3.2.1 Geomembrane Conformance Testing

GSE Environmental, LLC (GSE) 40-mil double-sided textured HDPE geomembrane installed for the multi-layer cover systems was manufactured and supplied by GSE. The textured geomembrane rolls were generally 700 feet long by 22.5 feet wide.

Quality control testing was performed by GSE in accordance with project specifications, and GSE provided quality control certificates for the geomembrane rolls delivered to the Site. The quality control test results demonstrated that the material met the project specifications. The product data sheets and quality control certificates are included in Appendix F.

Quality assurance samples of the geomembrane were collected at the factory and shipped to Golder's laboratory to be tested for thickness, puncture strength, carbon black dispersion, density, carbon black content, tensile strength at break, tensile strength at yield, elongation at yield, and elongation at break. Additionally, the interface shear strength of the geomembrane material with adjacent materials in the

cover system were tested at a rate of one test per 10 acres of material delivered (2 tests total). The results of the interface shear strength tests indicated a friction angle for the cover system that was greater than required by the project specifications.

One test (on sample 10818-3086) was re-tested due to a failed initial test for elongation at yield. The corresponding re-test passed and met the project specifications. The quality assurance results for this material demonstrated that the geomembrane met the project specifications. Geomembrane laboratory testing results are presented in Appendix F.

4.3.2.2 Geocomposite Conformance Testing

The geocomposite drainage material (TN-240-2-8) was manufactured and supplied by Skaps Industries (Skaps). The geocomposite consists of a 200-mil HDPE geonet heat bonded to an 8 oz/sy nonwoven polypropylene geotextile on both sides of the geonet. Geocomposite roll dimensions were generally 230 feet long by 14.5 feet wide.

Quality control testing was performed by Skaps in accordance with the project specifications, and Skaps provided quality control certificates for the geocomposite rolls delivered to the Site. The quality control test results demonstrated that the material met the project specifications. Quality control certificates are included in Appendix G.

Quality assurance samples of the geocomposite were collected at the factory and shipped to the Golder Laboratory for testing. The following conformance testing was performed on selected rolls of the geonet and geotextile materials:

- Geonet Component:
  - Thickness
  - Adhesion Strength
  - Transmissivity
- Geotextile Component:
  - Mass/Unit Area
  - Puncture Strength
  - Grab Strength
  - Grab Elongation

The quality assurance test results demonstrated that the geocomposite samples met the project specifications. Geotextile conformance testing results are presented in Appendix G.

4.3.3 Manufacturers' Quality Control Certification Review

The manufacturers' QC Certificates for the geosynthetic materials delivered to the Site were submitted to Golder for review to check adherence to the project specifications. The review indicated that the QC test results shown on the final QC certificates met or exceeded the minimum physical/mechanical property requirements listed in the project specifications. Copies of the manufacturers' certificates and QC test results for the geomembrane rolls and geocomposite rolls are presented in Appendix F (geomembrane) and Appendix G (geocomposite).

4.3.4 Geomembrane Installation

4.3.4.1 Overview

The textured geomembrane and the geocomposite drainage layer were installed within the limits of Area A, Area E, and the PCB cells as shown on Sheets 06 and 08 of the Construction Record Drawings. The approximate quantities of each material installed are as follows:

- Textured 40-mil geomembrane – 504,627 square feet
- Geocomposite drainage material – 504,627 square feet

Table 1 provides a summary of material quantities including the approximate quantities utilized within each area of OU-3. Plastic Fusion installed both the geomembrane and the geocomposite drainage layer in general accordance with the project specifications and both installation processes are described in detail in the following sections.

Golder completed CQA forms to document deployment, trial welds, destructive tests, non-destructive tests, seaming information, and repairs for both the geomembrane and the geocomposite drainage layer installations, as appropriate. Field forms documenting the installation of the geomembrane are provided in Appendix H.

4.3.4.2 Geomembrane Deployment and Seaming

The geomembrane rolls were transported to the cover area for deployment using a JCB 300T skid steer with a brace and roller. The geomembrane was placed on top of the prepared subgrade by manually deploying the rolls. The geomembrane was deployed in panels generally running up and down the side-slopes across the entire cover area. The geomembrane panels were overlapped approximately 6 inches and welded.

During and immediately after deployment of each geomembrane panel, the sheet was visually examined by Golder personnel to ensure that the method of deployment did not cause damage to the geomembrane. Defects resulting from manufacturing, shipping, or deployment were repaired in accordance with Section 02 56 13, 3.1 of the Specifications. This process included observation of

geomembrane panel placement, panel alignment, panel overlap with adjacent panels, panel surface quality, and panel identification (roll and panel number assignment).

Golder assigned each geomembrane panel a unique panel number corresponding to the order in which it was deployed. Geomembrane liner panel deployment logs and panel layout drawings, documenting the rolls placed, are provided in Appendix H.

Generally, upon deployment of two adjacent panels, the panels were seamed together using the fusion welder (see seaming discussion below). Sand bags were used to temporarily anchor the outermost edge of the last geomembrane panel(s) installed each day until adjacent panels were installed and permanently seamed.

The principal seaming method employed by Plastic Fusion was the dual hot wedge fusion process. Plastic Fusion also used hand-held extrusion welders to weld cross-seams, make repairs, to reconstruct failed fusion seams, and to weld seams that were too short or irregular for the fusion welder, or areas that were difficult for the fusion welder to access.

Golder field personnel observed and documented seaming operations on a full-time basis. Monitoring during seaming included the observation of the seam area for cleanliness and absence of moisture and the monitoring of welding machine temperatures. All seams were observed for visual quality and seam completion. Observed imperfections were marked by either a Plastic Fusion technician or by Golder and were subsequently repaired. Seaming information recorded by Golder included seam number, seam section, ambient temperature, approximate start time, seaming device, seaming technician, pre-heat set or machine speed, digital set and indicator temperatures of the wedge or barrel nozzle, approximate welding length, and destructive sample number (if applicable). Monitoring of the seaming procedures also included observation and testing of trial welds and non-destructive and destructive seam testing; these procedures are discussed in the following sections. Seam monitoring data are also presented in Appendix H.

4.3.4.3 Trial Welds

Geomembrane trial seams were prepared by Plastic Fusion technicians prior to each seaming period for each technician and each machine. Trial seams were prepared for every type of material weld that would be encountered within that seaming period (i.e. fusion weld, extrusion weld). The following procedure was used to field evaluate trial seams:

- At least six test specimens were cut across the trial seam sample, each approximately 1-inch wide by 6 inches long;
- At least three specimens were tested in peel and three for shear strength using a field tensiometer;

- Hot wedge (fusion) seams were tested in peel on each track (inside/outside);
- The passing criteria for the peel test was a visual observation of a proper break and a tensile strength greater than or equal to the specified strength;
- If any of the specimens failed, adjustments were made to the welding equipment and a new trial seam was fabricated, and the test procedure was repeated; and
- Once a trial seam passed, the technician could proceed with the field seaming operations.

Golder personnel observed the trial seam testing, and no failures in the trial seam testing occurred during this project. The criteria for shear strength stipulated by the project specifications is that specimens shall yield at a strength equal to or greater than 80 pounds per inch (ppi) for fusion and extrusion seams. The strength criteria for peel adhesion stipulated by the project specifications is that specimens shall yield at a strength equal to or greater than 60 ppi for fusion welds and 52 ppi for extrusion welds. The geomembrane trial seam results are presented on the Geomembrane Trial Seams Logs provided in Appendix H. Figures depicting the codes used to classify the failure modes for both fusion and extrusion seam test specimens are also included in Appendix H.

4.3.4.4 Geomembrane Non-Destructive Seam Testing

Field geomembrane seams, patches, and repairs were tested by Plastic Fusion for continuity using air pressure (on double hot wedge seams) or vacuum (on extrusion seams) test procedures. Golder personnel observed and documented the non-destructive seam testing. The procedure for the air pressure test was as follows:

- Visually observe the integrity of the channel of the section of seam being tested;
- Seal both ends of the channel section to be tested;
- Insert the needle of the pressure gauge into the channel at one end of the seam;
- Inflate the channel to between 25 and 30 psi gauge pressure with an air compressor and stabilize air pressure for 5 minutes;
- Record the beginning and ending time and beginning and ending pressures;
- Maintain the gauge pressure for at least 5 minutes; if the pressure loss exceeded 2 psi, or if the pressure did not stabilize, the area was repaired and retested;
- Upon completion of the test, continuity in the channel was confirmed by releasing the air from the end of seam opposite the gauge; and
- Repair the ends of the seam by extrusion welding a patch over the affected area.

The vacuum test was used to nondestructively test extrusion-welded seams. The procedure was as follows:

- Connect the hose and vacuum box assembly to the vacuum pump;
- Wet a strip of seam approximately 4 inches wide by 2 feet long with soapy solution;
- Place the box over the wetted area;

- Close the bleed valve/open the vacuum valve;
- Force the box onto the sheet until a vacuum is established, as evidenced by a negative box pressure of approximately 5 psi;
- Examine the seam through the viewing window for a period of approximately 15 seconds for the occurrence of air bubbles;
- Record and mark the location of any leaks to be repaired;
- Close the vacuum valve/open the bleed valve; and
- Remove the box and continue the process.

Whenever non-destructive testing indicated repairs were necessary, the procedure was generally to make the repairs and repeat the test at the time of testing. A summary of the completed repairs is included in Appendix J. Seaming Logs documenting the welding of the geomembrane panels are provided in Appendix H, along with seam Testing Logs that document non-destructive seam testing.

4.3.4.5 Geomembrane Destructive Seam Testing

The project specifications required destructive testing at a frequency of one destructive test for every 500 linear feet of seam. A summary of the number of destructive field seams that were collected for the various areas is as follows:

- A total of 17 geomembrane seam samples were collected for destructive testing from approximately 7,254 linear feet of seam for Area A.
- A total of 2 geomembrane seam samples were collected for destructive testing from approximately 1,014 linear feet of seam for Area E.
- A total of 33 geomembrane seam samples were collected for destructive testing from approximately 15,777 linear feet of seam for the PCB cells.

Locations where destructive test samples were taken are shown on the Panel Layout Drawings included in Appendix H. At each destructive test sample location, two specimens were removed from each end of the sample and tested in the field by Plastic Fusion for failure mode and strength (same criteria as trial seams).

If one or more of the specimens failed testing in the field, the entire sample was considered a failure and no laboratory testing of the failed field sample was conducted. Retesting and repair procedures outlined in the project specifications were then followed. If all specimens passed field testing, the entire sample was cut out by Plastic Fusion. Each destructive sample was divided into three sections: one 12-inch section was retained by Golder for archiving, a second section (18 inches) was utilized for laboratory testing by Golder and the third (12 inches) was retained by Plastic Fusion. Laboratory samples were transported to Golder's Atlanta, Georgia laboratory for testing in accordance with the project specifications. Each destructive sample submitted to the laboratory was divided into ten 1-inch wide specimens, five for bonded seam strength (shear) testing and five for peel adhesion (peel) testing. For double track fusion

samples, both tracks were tested for peel adhesion, resulting in ten peel specimen test results for each fusion sample. The specified acceptance criteria for shear tests was that four of the five specimens must have yield strengths greater than or equal to 80 ppi, with failure not extending more than 10 percent into the weld. The criteria for peel tests was that four of the five specimens must have peel strengths greater than 60 ppi for fusion welds and 52 ppi for extrusion welds, with failure not extending more than 10 percent into the weld. In the event of failure of either of these criteria, the destructive sample was considered a failure in accordance with the project specifications. Of the (52) samples collected, all passed the strength and seam criteria required in the project specifications.

Seam destructive samples were designation “DSF” and “DX” for fusion and extrusion seaming methods, respectively. Summaries of the destructive test results are presented in Appendix I. Figures depicting the codes used to classify the failure modes for test specimens are included in Appendix I. The approximate locations of the destructive test samples are shown on the Panel Layout Drawings.

4.3.4.6 Defects and Repairs

The seams and non-seam areas of the geomembrane were examined for identification of defects, holes, blisters, undispersed raw materials, and any sign of contamination by foreign matter. When a defect was observed or detected, the following repair procedures were conducted:

- The seaming equipment used in the repair procedure had field trial seams approved prior to use;
- The surfaces were clean and dry at the time of the repair;
- Patches and caps extended at least 6 inches beyond the edge of the defect and the corners were rounded; and
- The repairs were vacuum tested and visually observed for continuity.

Defects in the geomembrane were repaired by Plastic Fusion in accordance with the project specifications. Golder personnel observed the repairs either during the repair procedure or after the repairs were made. Golder assigned each observed defect a unique alphanumeric code to ensure tracking of both the repair and the subsequent non-destructive test performed by Plastic Fusion. The alphanumeric codes are used throughout the CQA logs to reference defect or seam locations. The defect/repair logs prepared by Golder field personnel are included in Appendix J.

4.3.4.7 Penetration Boots

Any location that required a penetration of the geomembrane required a boot to be installed (e.g., power poles, wells, etc.). The boots were installed in a two part system. The first part consisted of a bottom sleeve of 40-mil HDPE geomembrane that was customized to fit around the diameter of the penetration. The bottom of the sleeve (apron) was then extrusion welded to the geomembrane surrounding the

penetration. Then the second part of the system included an HDPE sleeve inserted within the annulus of the apron and then secured with a fernco fitting to provide a flexible, water-tight seal.

4.3.5 Geocomposite Drainage Layer Installation

The geocomposite rolls were transported to the cover area for deployment using a JCB 300T skid steer with a brace and roller. The geocomposite rolls were placed directly on top of the geomembrane after seaming and testing of the geomembrane were complete. The geocomposite was deployed in panels generally running up and down the side-slopes across the entire cover area.

During deployment of the geocomposite rolls, the material was visually examined by Golder personnel to ensure that the method of deployment did not cause damage to the geocomposite. Defects resulting from manufacturing, shipping, or deployment were repaired in accordance with the project specifications. A summary of the completed repairs is included in Appendix J. Sand bags were used to temporarily anchor the geocomposite material installed each day until adjacent panels were installed and permanently seamed.

The geotextile component of the geocomposite panels were overlapped approximately 6 inches and continuously sewn together. The cross seams were also sewn together. Golder field personnel observed and documented sewing operations on a full-time basis.

4.3.6 Anchor Trench

An anchor trench was excavated at the upslope origination of the geosynthetics installed at the PCB cells to hold the newly installed geosynthetics in place. After the textured geomembrane and geocomposite were placed in the anchor trench and seaming was completed, the trench was backfilled with soil cover material.

4.4 Soil Cover Construction Quality Assurance

4.4.1 CQA Services

The CQA monitoring services for soil cover material testing and placement provided by Golder included:

- Sample collection and conformance testing of the subgrade material, cover soil, topsoil, and DGA material
- Observation and documentation of the placement of this material as cover system components
- Testing of the soil as the material was placed in the cover system including performing in-place density tests as required by the Technical Specifications
- Confirming the thickness of in-place material

- Observation and documentation of the protective cover, drainage system construction, including installation of the drainage pipes, associated geosynthetics, and rip rap/stone placed above the geomembrane material.

Detailed descriptions of each of the above monitoring duties are presented in the following sections. Copies of laboratory conformance test results, in-place density tests, and thickness verification measurements are included in Appendices K through Q, as specified in the following sections.

4.4.2 Sourcing And Conformance Testing

The Coldwater Mountain Trail (CMT) Borrow Area was used as the primary soil borrow source during the RA for the subgrade material and the cover soil. P/S conducted a borrow source investigation and determined that the materials available from this borrow area were suitable for use in the project; however, processing of the material (removing larger particles) was required in order to meet the maximum particle size requirements.

Prior to utilizing the borrow area, testing of the material for PCBs was conducted. Genesis Project Inc. collected two composite soil samples on April 25, 2011 from six test pits excavated from representative locations distributed across the CMT Borrow Area. The test results indicated low level PCB detections less than 1 milligram per kilogram. As previously discussed with the EPA, the use of soil from the CMT Borrow Area was determined to be acceptable for the implementation of the OU-3 RA. The approval letter from the EPA is included in Appendix U.

Conformance testing was performed on the fill material used for the subgrade layer and the soil cover layer above the geosynthetics. Bulk samples of soil were collected on July 22, 2015 from three test pits located within the CMT Borrow Area. Prior to testing, the material was screened to remove particles larger than 1-inch and uniformly mixed to create a representative sample. Testing was performed in accordance with project specifications by Golder's Atlanta geotechnical laboratory, and the data were reviewed for conformance with the project specifications. Conformance test results for the materials collected from the CMT Borrow Area are included in Appendix K along with the laboratory data sheets. All material was screened on-Site by Taylor to remove particles greater than 1 inch prior to placement.

The RA contractor proposed using an off-Site borrow source located in Oxford, Alabama to supply topsoil for the project. Taylor submitted two bulk samples of proposed topsoil material collected from a stockpile at the Oxford Recreation Complex. The material was transported to Atlanta, GA on May 28, 2015 for geotechnical testing by ATC Associates. Samples were tested for grain size distribution, pH, plasticity, and organic content. Results and laboratory data sheets are included in Appendix L. The initial testing of the topsoil material did not meet the requirements for organic content, but Taylor collected additional samples from another portion of the borrow area and the material had sufficient organic material consistent with the project specifications.

Prior to utilizing the borrow material from this off-Site source, testing of the material for PCBs was performed by Genesis Project, Inc. and conducted at a frequency of 1 test per 5,000 cubic yards of material supplied to the Site. The results of the tests performed showed no detections of PCBs. On July 16, 2015, P/S submitted an evaluation report requesting approval from the EPA for utilizing the Oxford Recreation Complex borrow pit as an off-Site borrow source for topsoil material for the RA project. The EPA approved the use of the borrow source on July 31, 2015. The approval letter from the EPA is included in Appendix U.

4.4.3 Soil Cover Installation

CQA monitoring was performed during the construction of the soil cover layer and vegetative cover layer in accordance with the project specifications. Golder observed the placement of the 12-inch thick soil cover layer and 6-inch thick vegetative cover layer over the geosynthetic cap to ensure that the geosynthetic components were not damaged during placement of the soil material. The quantity of cover soil and topsoil placed within each area is summarized in Table 1. Care was taken to minimize wrinkles during fill placement. The cover soil layer placed on top of the geosynthetics was placed with low ground-pressure equipment and lightly compacted, as required for access and stability and to support vegetation. Golder performed periodic gradation checks of the cover soils to confirm that the maximum particle size did not exceed 1 inch. The uppermost zone of the soil cover (topsoil layer) was scarified to provide a base for seeding and treated with fertilizer, as necessary.

Field density testing was not performed on the soil cover layer since the soil material was placed directly above the geosynthetic liner system and the use of heavy compaction equipment was prohibited. Golder performed visual depth checks of the soil cover layer and vegetative cover layers over the entire cover system. A review of the in-place depth checks indicate that the required cover thickness of 18 inches was achieved at all locations. As-built contours of the soil cover layer and the final surface are depicted on Sheets 06 and 08 of Construction Record Drawings. Cover thickness verification is documented in Appendix O.

Golder extended the timeframe for placing cover soil over the geocomposite at both the PCB Cells and Area A. At the PCB Cells, the extension was granted from November 20, 2015 to January 20, 2016 as a result of inclement weather and difficulties encountered excavating and processing soil from the borrow area. This extension was discussed on an on-going basis with the EPA and ADEM, who attended as available, during the weekly progress meetings. The contractor ultimately covered the geocomposite with temporary poly sheeting until cover soils could be placed. At Area A, the extension was granted from April 19, 2016 to May 13, 2016 as a result of inclement weather.

4.4.4 Perimeter Drainage System

As per the design, a drain system was installed around the toe of the cover systems in Area A, Area E, and the PCB cells to promote drainage of water collected in the geocomposite drainage layer. For Area A and the PCB cells, the drainage system consisted of a geotextile filter fabric and rip rap material placed directly above the geocomposite drainage system around the perimeter of the cover system. For Area E, the drainage system consisted of 4-inch perforated ADS piping, surrounded by No.57 crushed aggregate and a geotextile filter fabric. This drainage system was installed to discharge through an outlet pipe on the western side of Area E into the Facility's stormwater collection system.

4.4.5 Grassing

The surface of the final cover systems was grassed by Taylor using various ALDOT seed mixtures and fertilizers based upon the time of the year that the seed was applied. Prior to the placement of the seed, the topsoil was fertilized in accordance with the project specifications. Due to the drought conditions encountered upon completion of the project, Taylor was required to re-seed the areas multiple times before sufficient grass was established. For Area E, sod was used instead of seeding.

4.5 DGA Geocell-Reinforced Cover Construction Quality Assurance

4.5.1 CQA Services

CQA monitoring was performed during the construction of the DGA geocell-reinforced cover system in accordance with the project specifications.

4.5.2 Conformance Testing

The RA Contractor requested to utilize ALDOT "Type B" DGA in lieu of Type A as listed in the Technical Specifications due to the availability of the material. As the gradation requirements were not significantly different, the request was approved. Two bulk samples of DGA were supplied from Vulcan Material Company (14081-ALDOT 825 B) and tested for conformance with the project requirements. The particle size distribution was found to be slightly coarser than required and did not contain sufficient fines. The RA Contractor worked with the quarry to improve the mix and the material was re-tested. Although the fines content of the material sampled by Golder contained 0.7% less fines than specified by ALDOT (6.3% in comparison to a minimum requirement of 7.0%), the material was approved as this slight difference will not impact the performance of the cover system. The particle size distribution of this material in relation to the requirements of ALDOT Type B DGA is included in Appendix M along with the laboratory data sheets.

4.5.3 DGA and Geocell Installation

An approximate 6-inch thick layer of DGA was placed and compacted over the improved subgrade for Areas C & D. Approximately 7,560 tons of DGA material was imported to construct this lift of the DGA

cover system. During the placement of this DGA layer, Golder personnel observed the material for consistency and particle size distribution. Compaction of the DGA material was performed with a sheepsfoot roller and a smooth drum roller and field density tests were performed by Golder as required by the project specifications. A total of 11 compaction tests were performed, which is approximately three tests per acre. Table 3 includes a summary of the results of the density testing. As shown in the summary table, two tests failed to meet the compaction requirements, but were re-tested once the areas were re-worked or re-compacted. Appendix P documents the field density testing of the DGA in Areas C & D.

After the initial 6-inch layer of DGA material was placed, the RA Contractor installed the 6-inch geocells and filled the geocells with compacted DGA material. Golder personnel observed the placement and compaction of this material to ensure that the geocells were installed in accordance with the project specifications and were not damaged during installation. Additionally, Golder personnel observed the DGA material for consistency and that the material was adequately compacted.

The CQA representative monitored the placement and compaction of the DGA material and geocells to ensure that the material was properly compacted, but no compaction testing was performed due to the geocell material included within the layer that precluded testing of the layer.

The overall thickness of the DGA geocell-reinforced cover was measured by survey and a map showing the thickness of the layer is included in Appendix Q. The cover was measured to be a minimum of 12 inches thick.

4.5.4 Perimeter Toe Protection

As per the design, a rip rap protection layer was installed around the perimeter of Areas C&D to protect the cover system from erosion. The rip rap protection consisted of a geotextile filter fabric and rip rap material placed directly above the DGA cover around the perimeter of the cover system. During construction, it was noted that surface flow around the eastern side of Areas C&D was eroding the existing gravel surface outside the limits of Areas C&D. As a result, drainage improvements outside the limits of the cover system were made to include a rip rap lined channel along this edge of the cover system to convey surface water flow directed around Areas C & D.

4.6 Construction Aggregate Quality Assurance

Rip rap and #57 crushed aggregate were used in multiple areas as specified in the design. Conformance and quarry certifications are provided in Appendix N.

4.7 Concrete Construction Quality Assurance

Concrete work was required in the following areas:

- Autoclave Unit Area
  - Concrete cover
- Area A
  - Around vaults
  - Sidewalk in the northern and southern portions of the area
  - Curbing on the western side of the area
- Area E
  - Retaining walls and footings
  - Concrete cover in the northeast and northwest corners outside of the retaining wall
  - Control room building foundation and surrounding concrete cover

The concrete caps were a minimum of 6 inches thick and were constructed per Section 450 of the Alabama Department of Transportation Specifications. The caps were also constructed to meet plant requirements with regards to matching the existing grades for surrounding structures or adjacent improvements.

The concrete mix design originally called for 3,000 psi strength concrete reinforced with #4 rebar, which was used for the concrete to construct the cover system for the Autoclave Unit. However, following construction of the Autoclave Unit, 4,000 psi strength concrete was used for the remainder of the project. The mix design strength was increased to 4,000 psi based upon a low break reported in the Autoclave area that didn't achieve 3,000 psi at 28 days and to ensure that the design strength would be met sooner in order to expedite construction activities.

Table 4 provides a summary of the concrete break results. Laboratory break reports are included in Appendix R.

4.7.1 Autoclave Unit Area

The Autoclave Unit Area was capped with a 6-inch thick concrete cover. This area was previously covered with gravel. The gravel was removed down to 12 inches in depth (where possible) and replaced with 6 inches of DGA and 6 inches of concrete. However, concrete obstructions were exposed along the north side of the autoclave area during subgrade excavation. For this area, Taylor was directed to chip and demolish the obstructions to reach a minimum depth of 6 inches for construction of the concrete cover. The cover area is approximately 6,800 sf.

The DGA subgrade was compacted prior to pouring the concrete cap. As this area is located in a part of the Facility with limited access for heavy equipment, hand work, rammers and plate compactors were used to compact the DGA.

Prior to the RA Contractor completing the concrete pours in the Autoclave Area, the CQA Consultant reviewed the subgrade, forms, reinforcement, embedded items, and joints. Additionally, the CQA Consultant reviewed the CQC testing results from the concrete cylinders and determined whether the results met the requirements of the project specifications. The concrete strength tests are included in Appendix R.

One of the concrete break results from the Autoclave Unit Area indicated a value less than the project specifications required. The CQA consultant evaluated the potential impact to the cover system. Given the location and anticipated traffic loadings in the affected part of the concrete cover, the lower strength concrete is not expected to lead to any significant performance reduction of the cover in either the short- or long-term.

4.7.2 Area A and Area E

As shown on the Record Drawings, 6-inch thick concrete caps and concrete retaining walls were constructed in portions of Area A and Area E. The caps were typically poured in place on a prepared subgrade and the retaining wall sections were poured on top of an approximate 4-inch thick DGA subbase.

Prior to the RA Contractor completing the concrete pours in Area A and Area E, the CQA Consultant reviewed the subgrade, forms, reinforcement, embedded items, and joints. Additionally, the CQA Consultant reviewed the CQC testing results from the concrete cylinders and determined whether the results met the requirements of the project specifications. The concrete strength tests are included in Appendix R.

5.0 CONSTRUCTION COMPLETION - ALTERNATIVE GW-C (EXPANDED GROUNDWATER EXTRACTION WITH MNA)

The following provides a description of the construction activities that were performed to complete the groundwater systems portion of the RA and the CQA activities that were conducted to properly document these activities and demonstrate that the work was completed in compliance with the Final RD (Golder 2015a). The Final RD includes the final design drawings, Technical Specifications, and the Construction Quality Assurance Plan that were used to implement the RA. Details of the completed construction are documented in the Construction Record Drawings and are referenced below.

5.1 Waste Excavation and Disposal

Limited excavation of impacted soil was required as part of installing the groundwater portions of the RA. A total of 232 tons of impacted soil related to the groundwater portions of the work was removed and hauled off the Site (see Table 1). Excavation was mostly related to the installation of below ground piping. A listing of the waste manifests and the location of where the material was generated is included in Appendix D along with a copy of each manifest. Characterization data were available to determine the proper disposal requirements for the soil excavated. Existing data and generator knowledge were used to determine the disposal procedures for the excavated materials. All soils excavated were contained in lined roll-off containers, staged, and transported to the Chemical Waste Management Facility in Emelle, Alabama, which is a TSCA and an EPA-approved facility.

P/S notified the EPA prior to transporting soil generated from within OU-3 to an off-Site disposal facility so that the EPA could confirm that the disposal facility was in compliance with applicable federal and state landfill regulations. These notifications are included in Appendix U.

5.2 CQA Services

The activities associated with construction of the groundwater systems were monitored by Golder for compliance with the project specifications. This monitoring was required for the following:

- Interceptor well installation,
- Conveyance piping installation, and
- CTS installation.

5.2.1 Well Installation

Golder observed and monitored the installation of the four new interceptor wells that were installed as part of the RA. The wells were installed by Cascade Drilling LP, a licensed driller in the State of Alabama. Each interceptor well was constructed with a nominal 4-inch diameter PVC well casing and screening material. The screens extended from approximately 10 feet to 35 feet bgs for the two wells adjacent to OW-21A (IW-26 and IW-27) and 8 feet to 38 feet bgs for the two wells adjacent to OW-10 (IW-28 and IW-

29). The well screens were 6-slot screen to minimize the amount of fine material (silts and clays) that would enter into the well during pumping. The sand pack consisted of a 20/40 graded sand. The wells were fitted with a submersible pump and completed with flush-mount well vaults. Refer to Appendix S for the well installation logs for the four new interceptor wells and for details regarding the well development, pumps, controls and level switches.

5.2.2 Conveyance Piping

The conveyance piping between the interceptor wells, carbon systems, and discharge points was primarily constructed from single-wall HDPE piping and HDPE fittings. The discharge piping from the pumps within the interceptor wells to the HDPE conveyance lines was constructed of single-wall PVC pipe. Metal components, such as pit-less adapters and hose barbs, were utilized as required to complete the construction of the conveyance system. Golder monitored the installation of the conveyance piping system and hydrostatic pressure testing of the conveyance lines between the interceptor wells, carbon systems, and discharge points. Table 5 provides a summary of the hydrostatic pressure testing of the conveyance lines.

5.3 Carbon Treatment Systems (CTSs)

Extracted groundwater from the four interceptor wells is routed to pretreatment systems using activated carbon. Separate pretreatment systems were constructed for the two groundwater impact areas identified near wells OW-21A and OW-10. Schematics of the pretreatment systems are shown on Sheet 18 of the Construction Record Drawings. It is planned for treated groundwater from wells IW-26 and IW-27 to be pumped to an existing sanitary sewer manhole located north of the Facility. From that existing manhole the accumulated groundwater will be discharged to the City of Anniston POTW. The AWWSB and P/S are finalizing negotiations related to the Site's SID permit and alternative manhole discharge locations. Consequently, the treated groundwater is currently being stored in a temporary frac tank and hauled to the Facility's sewer connection with the AWWSB (permitted discharge point DSN-002).

Treated groundwater from wells IW-28 and IW-29 is pumped to an existing lift-station and then routed to the City of Anniston POTW via SID discharge location DSN-002. The current discharge configuration for CTS #1 represents an interim discharge configuration while permitting for the planned AWWSB manholes is completed. Upon approval of the final discharge locations and completion of remaining construction activities, an addendum to this report will provide documentation of the final piping and discharge details.

The carbon systems were installed using a lead-lag configuration for the two granulated activated carbon (GAC) vessels in each system. An analysis was performed to size the GAC vessels and Carbonair Model PC-3F pressurized vessels were selected. Each vessel has a carbon capacity of 250 pounds. Each carbon treatment system includes two GAC vessels, which are installed in series in a lead-lag configuration. Breakthrough of the carbon systems will be monitored as indicated in the O&M manual to

manage the discharge of contaminants from the systems. Refer to Appendix T for details regarding the GAC vessels and associated equipment included in each carbon treatment system.

6.0 SUMMARY OF RA CONSTRUCTION ACTIVITIES

This section provides a monthly timeline of the RA activities and a bulleted description of the construction activities completed. A photographic log of each month's construction activities is included as Appendix C.

6.1 June 2015

- RA Contractor approval on June 5, 2015
- Preconstruction conference on June 8, 2015
- RA public meeting on June 8, 2015
- RA Contractor mobilized to Site on June 24, 2015

6.2 July 2015

- Prepared subgrade for PCB cells
- Cleared the CMT Borrow Area

6.3 August 2015

- Excavated impacted soil at the Autoclave Unit Area and partially backfilled the area with DGA
- Scarified and compacted the subgrade for the PCB cells
- Prepared the borrow area: installed erosion controls, cleared and chipped vegetation, and stockpiled topsoil

6.4 September 2015

- Constructed the 6-inch reinforced concrete cover over the Autoclave Unit Area
- Developed the borrow area further and screened borrow soils
- Hauled subgrade material to the PCB cells
- Placed subgrade soil in the southwest portion of the PCB cells and then progressed to the north and east
- Began grading Area A for the concrete cover system to be installed in the southeastern portion the area
- Began excavating for the retaining wall footing in Area E, placed DGA beneath the footing elevation, and installed formwork for the footing and wall

6.5 October 2015

- Developed the borrow area further and screened borrow soils
- Completed the subgrade preparation for the PCB cells including smooth drum rolling of the area
- Completed deployment and seaming of the HDPE geomembrane for the PCB cells and began installing the geocomposite drainage layer
- Began installing the Site fencing and pouring the concrete cover located around the perimeter of Area A
- Installed formwork and began pouring sections of the footing and retaining wall in Area E

- Began blending DGA into the underlying gravel material present on the existing subgrade in Areas C and D

6.6 November 2015

- Processed and stockpiled soil from the borrow area
- Completed deployment and installation of the geocomposite drainage layer for the PCB cells
- Began placing cover soils over the geocomposite drainage layer for the PCB cells
- Installed the Site fencing and completed pouring the concrete cover located around the perimeter of Area A
- Installed formwork and poured sections of the concrete footing and retaining wall in Area E
- Completed blending DGA into the underlying gravel material present on the existing subgrade in Areas C and D
- Began placing DGA and geocells for the 1-foot DGA cover in Areas C and D

6.7 December 2015

- Processed and stockpiled soil from the borrow area
- Placed cover soils and began placing topsoil over the geocomposite drainage layer for the PCB cells
- Completed installing the Site fencing around the perimeter of Area A and in the northeast corner of OU-3 (north of Area A)
- Installed formwork and poured sections of the concrete footing and retaining wall in Area E
- Placed DGA and geocells for the 1-foot DGA cover in Areas C and D, and installed rip rap armor around the perimeter

6.8 January 2016

- Processed and stockpiled soil from the borrow area
- Placed cover soils and topsoil over the geocomposite drainage layer for the PCB cells
- Installed rip rap around the perimeter of the PCB cells
- Placed grass seed and mulch over the southern portion of the PCB cells
- Began installation of the Site fencing along the southern boundary of the South Landfill (south of the PCB cells)
- Began excavating and placing DGA for the retaining wall footings located around the existing concrete vaults in Area A
- Began preparing Area A for construction of the cover system
- Completed installation of the rip rap armor around the perimeter of Areas C and D
- Installed formwork and poured sections of the concrete footing and retaining wall in Area E
- Installed CTS building enclosure and well vaults for wells IW-26 and IW-27 located north of the facility

- Began installing conveyance piping for wells IW-26 and IW-27

6.9 February 2016

- Processed and stockpiled soil from the borrow area
- Completed placing cover soils and topsoil over the geocomposite drainage layer for the PCB cells
- Installed rip rap around the perimeter of the PCB cells
- Constructed the permanent access road over the PCB cells
- Installed Site fencing south of Alabama Highway 202 (around perimeter of the borrow area)
- Formed and poured concrete for the footings and retaining walls located around the existing concrete vaults in the eastern portion of Area A
- Began placing DGA for the footing and concrete pad around the vaults in the southwest portion of Area A
- Formed and poured concrete for the footings for the retaining walls located around the existing concrete vaults in the southwest portion of Area A
- Continued preparing Area A for construction of the cover system
- Installed bollards and poured the concrete pad at the northwest corner of Area E
- Continued installing formwork and pouring sections of the concrete footing and retaining wall in Area E (completed the wall with the exception of a 45-foot section that will remain open for construction access)
- Installed internal piping within CTS enclosure and pumps for wells IW-26 and IW-27 located north of the facility
- Continued installing conveyance piping for wells IW-26 and IW-27

6.10 March 2016

- Processed and stockpiled soil from the borrow area
- Completed installation of rip rap around the perimeter of the PCB cells (with the exception of the northeast corner, which will remain incomplete until the seep area is addressed)
- Completed construction of the permanent access road over the PCB cells
- Completed vegetating the cover over the PCB cells
- Completed installation of the Site fencing south of Alabama Highway 202 (around perimeter of borrow area)
- Formed and poured concrete for the retaining wall and concrete cover around the existing concrete vaults in the southwest portion of Area A
- Continued preparing Area A for construction of cover system, placed and compacted subgrade soil in Area A
- Placed and compacted subgrade soil in Area E
- Deployed and installed the geomembrane cover for Area A and Area E
- Deployed and installed the geocomposite drainage layer for Area E
- Deployed and began installation of the geocomposite layer for Area A

- Began placing cover soils over the geocomposite drainage layer for Area E
- Completed installation of conveyance piping for wells IW-26 and IW-27
- Completed installation of the casings for the groundwater conveyance piping in the northeast and southeast corners of Area A

6.11 April 2016

- Processed and stockpiled soil from the borrow area
- Completed installation of the geocomposite drainage layer for Area A
- Began placing cover soils and topsoil over the geocomposite drainage layer for Area A
- Began installation of conveyance piping in Area A
- Completed placing cover soils and topsoil over the geocomposite drainage layer for Area E (with the exception of the southwest corner)
- Constructed the perimeter drain around Area E (with the exception of the southwest corner)
- Installed sod over the topsoil in Area E (with the exception of the southwest corner)
- Formed and poured concrete for the remaining portion of the retaining wall in the southwest portion of Area E

6.12 May 2016

- Processed and stockpiled soil from the borrow area
- Completed placing cover soils and topsoil over the geocomposite drainage layer for Area A
- Completed installation of conveyance piping and conduit in Area A
- Completed placing perimeter riprap and riprap check dams in Area A
- Placed grass seed, fertilizer and mulch over the soil cover in Area A
- Set junction boxes in the southeast and northeast corners of Area A
- Installed the vaults for the two interceptor wells in Area A
- Set CTS enclosure in Area A
- Completed placing cover soils and topsoil over the geocomposite drainage layer for Area E (including the southwest corner)
- Completed the perimeter drain around Area E (including the southwest corner)
- Completed installing sod over the topsoil in Area E (including the southwest corner)
- Constructed slab on grade and installed new fence in Area H
- Extended riprap in perimeter ditch on southeast side of Areas C and D

6.13 June 2016

- Began re-grading of the borrow pit to establish the final grades in accordance with the restoration plan
- Continued maintenance and watering of the vegetative cover layers in Areas A and E

6.14 July 2016

- Completed re-grading, placing topsoil, and hydroseeding of the borrow pit to establish final grades and vegetation in accordance with the restoration plan

6.15 August 2016

- Completed excavation for the additional curb on the western side of Area A
- Completed additional concrete curbs on the western side of Area A
- Completed minor surface water drainage improvements in Areas C and D

6.16 September 2016

- Completed soil backfill and sod installation behind the new concrete curb/slab additions in Area A
- Backfilled the sediment basin at the Coldwater Mountain borrow source
- Continued working to establish a healthy stand of grass in Area A and at the PCB cells
- Installed conveyance piping north of Area A for the RA groundwater system and the Solid Waste Management Unit 1 (SWMU 1) modifications

6.17 October 2016

- Continued working to establish a healthy stand of grass in Area A and at the PCB cells

6.18 November 2016

- Continued work to establish a healthy stand of grass in Area A and at the PCB cells
- Preparation and design for the control room building foundation slab in Area E

6.19 December 2016

- Continued installing mechanical, electrical and instrumentation components for CTS #1 and #2
- Connected CTS #1 to frac tanks in order to operate the system on a temporary basis until discharge permits are finalized
- Continued work to establish a healthy stand of grass in Area A and at the PCB cells
- Began pouring the foundation slab for the control room building in Area E

6.20 January 2017

- Completed installation of piping from CTS #2 to discharge piping located near IW-14A
- Installed mechanical, electrical and instrumentation components for CTS #2
- Completed startup and commissioning of CTS #1
- Completed pouring Area E cover/control room foundation slab and surrounding concrete cover
- Established a healthy stand of grass in Area A and at the PCB cells

6.21 February 2017

- Completed startup and commissioning of CTS #2

- Completed the pre-final construction inspection with the EPA on February 14, 2017 (see Appendix A)

7.0 CHANGES TO THE FINAL RD AND RA WORK PLAN

This section describes modifications that were made during the RA to the Final RD and the RA Work Plan and discusses why each of these changes was made. Appendix U provides the relevant correspondence with EPA related to these items.

7.1 Cover System Components

7.1.1 Area A

- An underground drainage pipe located on the northwest end of Area A was identified during construction and subsequently removed (excavated) prior to constructing the cover system. The pipe was removed as it posed a risk to damaging the overlying geosynthetic cap.
- The cover system around the vault/pump station located on the western portion of Area A was modified in order to accommodate construction of the cover system around existing Site features. The design modification replaced a portion of the geomembrane cover with a six-inch concrete cap. The concrete cover was constructed in accordance with the same requirements specified for the concrete pad around the perimeter of Area A. A short retaining wall was added to the design around a portion of the vault/pump station perimeter so that the geosynthetic cover system could be constructed up to the vault area. This modification was submitted to the EPA on 1/25/16 and approved on 2/2/16. A copy of the correspondence is included in Appendix U.
- A void in the existing subgrade was identified in Area A on 2/26/16 located east of the vault/pump station. The area was excavated and backfilled with geotextile filter fabric, riprap, and flowable fill material (7-sack grout mix). This area was addressed to provide a suitable subgrade for the cover system.
- The cover system along the western edge of Area A was modified to provide protection of the cover from truck traffic in this area. The cover system along the edge was changed from a geosynthetic cover to a 6-inch concrete cap. This modification was submitted to the EPA for approval on July 20, 2016, and was approved on July 25, 2016. A copy of the correspondence is included in Appendix U.

7.1.2 Areas C and D

- The alignment of the access road on top of the DGA geocell-reinforced cover was altered to better match the existing grades prior to installing the cover system.
- The culvert under the access road in the northern portion of Areas C & D outside the limits of the cover system was not installed as shown on the drawings. Golder determined conveyance of water under the road was not necessary based on the final grading of the area.
- A rip rap lined drainage swale was added to convey surface water flow along the southern and eastern portions of Areas C and D. The drainage swale was included as surface water flow was eroding the existing gravel surface located outside of Areas C&D.

7.1.3 Area E

- The retaining wall for Area E was re-aligned around the pump/sump unit in the northwest corner. The wall was modified such that a 6-inch concrete cover was constructed around the pump/sump area instead of using a geosynthetic cover. The 6-inch concrete cap and bollards was poured outside of the revised wall alignment around pump/sump unit. This

change was made to facilitate construction of the cover over this area. This modification was submitted to the EPA for approval on August 3, 2015 and was approved by EPA on September 2, 2015. A copy of the approval is included in Appendix U.

- The Area E Detailed Wall Layout was provided to the EPA on October 14, 2015. For constructability reasons, the layout included a minor re-alignment of the wall at a 45-degree angle in the northeast corner, which required placing a 6-inch concrete cap in a small area just outside the limits of the wall up to the existing curb to complete the cap in this area. Additionally, a weir was added on the western side of the retaining wall to control overflow rather than allowing flow to overtop the wall in a severe storm event. The Area E Detailed Wall Layout was provided to the EPA on October 14, 2015 and is included in Appendix U.
- New concrete foundations were poured for two existing light poles along the eastern side of Area E to accommodate the geomembrane/soil cover system rather than constructing HDPE boots around these poles.
- The keyway for the retaining wall around Area E was omitted and replaced with a butt faced joint. Due to the width of the wall and the use of water-stop material in the wall, it was impractical to construct this keyway. Sufficient reinforcement is included in the design of the wall to provide the necessary shear resistance.
- The footing along the northern portion of the retaining wall was modified to widen the foundation to 30 inches in order to provide additional resistance to overturning. All wall sections greater than 36 inches in height were modified.
- The height of the retaining wall for Area E was increased along the perimeter of the "Future Controls Building" area to Elevation 764.4 ft.-MSL. Modifications to the wall were made to match the proposed height of a future foundation wall that was to be constructed for the Control Building. This design modification was submitted to the EPA for approval on January 25, 2016 and was approved by the EPA on February 2, 2016. A copy of the correspondence is included in Appendix U.

7.1.4 PCB Cells

- The access road on top of the cover system was re-aligned to avoid the seep area. Also, the access road was constructed using a 10-oz geotextile fabric beneath the GAB surface rather than a 6-oz geotextile. This change was based upon the availability of the material.
- A rip rap swale ditch will be constructed along the PCB Cells access road entrance outside the limits of the cover system in order to minimize excavation in this area. The original design drawing called for a corrugated metal pipe (CMP) to be located under the entrance road at this location. The rip rap swale will provide the necessary hydraulic capacity to convey water across the road.
- After completing the cover system for the PCB cells, water from the pre-existing seep area was observed emanating from beneath the cover system. As a result, P/S submitted the SWMU 1 Modification design to install a collection system beneath the cover to collect and convey the water from the seep area (Solutia, 2016). P/S plans to implement the approved design in 2017.

7.1.5 Autoclave Unit Area

- PVC condensate lines from the Autoclave Unit were extended to collect and transport steam condensate off of the autoclave cover, and the new lines were constructed beneath the concrete cover.

- One set of concrete cylinders for the Autoclave Unit did not achieve the required 28-day break strength of 3,000 pounds per square inch (psi). Golder determined, as outlined in a memorandum to Solutia dated September 29, 2015 (included in Appendix R), that the lower break strength would not affect the long-term performance of the cover system.

7.1.6 Fencing

- The fence height around the Site perimeter was modified to match the existing fence height for the facility and South Landfill.
- The original Site fencing layout north of the facility's administration building was changed from the RD. The revised layout included removing an existing tree, locating the fencing as shown on Sheet 13 of the Construction Record Drawings, and pouring a concrete cover along the eastern side of the visitor parking area. The concrete cover was constructed in accordance with the same requirements specified for the concrete pad located around Area A. This design modification was submitted to the EPA for approval on January 25, 2016 and was approved by the EPA on February 2, 2016. A copy of the correspondence is included in Appendix U.
- The fence in Area A along the north side of the employee parking lot was offset from the edge of the payment in order accommodate truck traffic entering this portion of the facility.
- The fence along Monsanto Road to the west of the borrow area was set back from the road behind the existing power poles to allow access to the right-of-way along Monsanto Road.

7.2 Groundwater Components

7.2.1 IW-26 and IW-27 System

- The pretreated discharge for IW-26 and IW-27 currently is routed to a temporary frac tank and then hauled to the Facility and discharged to the City of Anniston POTW under the Facility's existing SID discharge permit. This change will be implemented until the AWWSB allow P/S to connect directly to the City of Anniston manhole located near the treatment system in this area or another long-term discharge alternative is implemented.

7.2.2 IW-28 and IW-29 System

- The effluent from the existing interceptor well IW-14A was routed to the new carbon treatment system located near IW-28 and IW-29 and is pretreated prior to discharging to the Facility's SID discharge point. This change was made to address potential future treatment needs. As part of this change, the flow meter vault that was to be located near IW-14A was removed and a flow meter was installed in the CTS to monitor flow from IW-14A, IW-28, and IW-29. The revised layout of the piping network is shown on Sheet 18 of the Construction Record Drawings.
- The precast enclosure for the new CTS was relocated north by approximately 150 ft. to accommodate field conditions and the installation of the new electrical service for this treatment system.
- The new effluent line from the carbon treatment system was increased to a 3" diameter pipe to provide the potential for additional flow and to be consistent with the planned groundwater system modifications that include combining the effluent discharge from CTS #2 and a new treatment system that will be located at the South Landfill prior to discharging all of the effluent to a common discharge location north of Area A. This work is currently on-going and will be documented in subsequent reports.

7.2.3 Carbon Treatment Systems

- 10-micron bag filters were installed in each new CTS upstream of the first GAC unit to collect sediment that might be present in the extracted groundwater.
- Pressure switches were installed in each CTS to monitor for potential over pressurization. The control design was modified to accept a high-pressure alarm signal and to shut down the groundwater extraction pumps.
- Wireless alarm transmitters were installed in each new CTS to relay a general alarm condition signal to the Plant's Control Room to indicate when a CTS unit is shut down due to a high system pressure or leak.

8.0 REMEDIAL ACTION CONSTRUCTION DOCUMENTATION

8.1 Daily Reports

Contractor daily reports are provided in Appendix V. Each report includes the safety topics discussed at the daily safety meetings, a summary of work completed, equipment and personnel on Site, materials delivered to the Site, and a notation about the weather.

8.2 Weekly Progress Meetings

Weekly progress meetings were held with the EPA, ADEM (as available), and P/S to discuss health and safety, work completed during the previous week, work in progress for the current week, and anticipated work to be completed over the upcoming two week period following the meeting. Problems encountered and opportunities to address these problems were discussed. An updated schedule was presented to the EPA and ADEM and discussed during each meeting. Minutes from weekly progress meetings are provided in Appendix V.

8.3 Stormwater Inspection and Maintenance Report Forms

Stormwater inspection and maintenance reports are provided in Appendix W. These reports provide a weekly summary of the weather conditions encountered at the Site, including rain events, and summaries of the findings of the BMP inspections and any maintenance or corrective actions that were conducted based upon the inspections. Additionally, this appendix includes the CBMPP Inspection Field Report Logs that provide further details of the BMP inspections and note when dust suppression was performed based upon the air monitoring that was performed during construction.

8.4 Air Monitoring Data

Up to three air monitors were used to monitor the level of airborne dust as a result of construction activities. If the dust levels exceeded allowable levels or if excessive visible dust was noted, then the need for dust control procedures was evaluated. If deemed appropriate, dust control measures were implemented and noted on the daily reports. Exceedances were typically addressed by temporarily halting work causing the dusty conditions and wetting the area with water from a hose or water truck.

The Contractor's Health and Safety Plan required the Contractor to implement dust suppression measures if visible dust was observed or the 15 minute time weighted average at the downwind property boundary was observed to be greater than 0.15 mg/m^3. However, in order to reduce the amount of dust within the Facility and landfill area, dust monitors were placed immediately adjacent to the work area rather than at the downwind property boundary and an action level of 0.5 mg/m^3 was used to determine whether dust suppression was necessary. These measures were used to determine the need for dust control in lieu of using the 15 minute time weighted average at the downwind property boundary.

The air monitoring data reports are provided in Appendix X.

8.5 Construction Material Quantity and Cost Summary

Appendix Y and Table 1 provide a summary of the final construction material quantities used to complete the RA construction. The RA work was initiated in 2013, and costs exceeded those anticipated due to increased scope of work and the extended construction duration. For the work completed to-date the capital cost of the RA construction has been approximately 6.69 million dollars.

9.0 DEFICIENCIES AND WORK REMAINING

9.1 Deficiencies from the Prefinal Inspection

The Prefinal Construction Inspection was conducted on February 14, 2017 and included representatives from the EPA, EPA Oversight Contractor, RD and RA Supervising Contractors, Construction Management Team, and the Certifying Engineer. A copy of the prefinal construction inspection report is included as Appendix A. The main deficiency noted in the work completed to date was a few shallow ruts in the soil cover in the northeast corner of Area A as a result of vehicular movement immediately following a period of rainfall. These ruts have been rectified by filling with soil, light compaction, and reseeding. The work was completed on April 21, 2017.

9.2 Work Remaining

As part of the Prefinal Construction Inspection, work yet to be completed was reviewed by the EPA and P/S, which included addressing the seep area located at the PCB cells on the South Landfill and connecting the discharge pipe for treated groundwater from CTS #1 located on the Northside Properties (adjacent to well OW-21A). Presently, treated water from CTS #1 is temporarily stored in a frac tank, and water is then transported by truck to the Site DSN-002 discharge location. Ultimately, the treated water will be discharged directly to a AWWSB manhole that is near CTS #1. The sewer connection will be completed upon receiving final approval from the AWWSB for discharging treated groundwater at this location.

During the RD, P/S proposed that the impermeable cover system required for the PCB cells to address impacts to groundwater would cut-off infiltration through the existing cover on top of these cells eliminating the source of water for the seep. However, following installation of the impermeable cover, water emanating from beneath the cover system near the seep area was noted. P/S notified both the EPA and the ADEM of this release in a correspondence letter dated March 23, 2016.

As a result, P/S designed and submitted proposed modifications to the SWMU 1 groundwater extraction and treatment system to address problems associated with the seep area at the South Landfill. These proposed modifications were submitted to the EPA on May 13, 2016. The proposed modifications related to the seep area included collecting water from the seep using collection drains installed beneath the HDPE cover system and conveying the water to a carbon treatment system (CTS #3) for treatment prior to discharging to a permitted AWWSB sewer connection.

P/S provided additional information regarding the design of the collection system for the seep area in a memorandum to the EPA on June 16, 2016 (Basis of Design Memorandum) to further support the design of the proposed system. The EPA approved the proposed design with comments on August 28, 2106 and requested that any additional changes proposed for the system be re-submitted to the EPA for approval.

P/S responded to the EPA's comments and provided updated design documents on September 23, 2016. The EPA approved the submitted changes and authorized P/S to proceed with construction of the proposed equipment and modifications, but indicated that the EPA would like to discuss conducting further investigations of the source of water for the seep area.

The current schedule includes completing construction by the end of 2017. P/S are issuing this Construction Report to document the RA construction activities completed to date, and will issue an addenda to this report as appropriate to document the remainder of RA construction activities that will be implemented.

P/S and the EPA conducted a meeting on October 30, 2016 to discuss the further investigations for the seep area recommended by the EPA, and P/S subsequently submitted a work plan on February 28, 2017 to install additional wells adjacent to the PCB cells at the South Landfill and monitor groundwater levels near the seep. However, prior to installing the wells, a second meeting between EPA and P/S representatives was convened on May 17, 2017 to discuss a more adaptive approach to the seep assessment. Following the meeting, P/S began to develop a revised approach that focuses first on evaluating the analytical chemistry of water from various portions of the aquifer that will be compared to water emanating from the seep. If the results from that approach are inconclusive, P/S will implement the second component of the assessment workplan that focuses on studying the groundwater hydrology to evaluate potential sources of water for the seep. The revised plan will be submitted to the EPA, and the plan will be implemented following approval from the EPA.

10.0 ADDITIONAL CONSIDERATIONS

This section describes health and safety items pertinent to the construction effort completed, and provides a brief overview of the Operations and Maintenance (O&M) activities to be performed after the RA is completed.

10.1 Health and Safety

The contractor completed the construction activities with a total of 41,665 safe work hours logged to date. The CQA consultant performed a Site safety audit on October 14 and 15, 2015. The goal of the audit was twofold; firstly, to observe the contractors performing their assigned tasks, and secondly, to review the implementation of Taylor's overall safety program. Along with field observations, the CQA consultant interviewed Mr. Jason Joiner, Taylor's safety manager. The audit was performed in a manner to foster technical exchange and promote improvement of the safety culture. The observations from the Site safety audit are summarized in Appendix Z.

One notable health and safety incident occurred during the construction activities. On November 16, 2015, an articulated dump truck overturned while being operated by the Contractor. There was no loss of life, significant injury or damage to property. Solutia performed an inspection on November 17, 2015 to assess whether there were any environmental impacts. No potential environmental impacts were noted. A summary of the inspection is included in Appendix Z.

On September 8, 2015, it was reported that wood chips, which had been stockpiled in the borrow area, had ignited and caught fire. The Anniston Fire Department was alerted and the Contractor worked with the fire department to ensure that the fire was contained and didn't cause any safety issues or property damage. The fire was allowed to burn out without incident. Documentation of the incident is included in Appendix Z.

10.2 Operations and Maintenance

Solutia has prepared an O&M Manual for internal adoption until the remaining work is complete. At such time, the manual will be submitted to EPA for approval. The O&M Manual is a stand-alone reference document to be used by those responsible for O&M activities for OU-3.

The OU-3 engineering controls that have been completed are described individually, and the specific O&M activities related to each of them are addressed in the respective sections of the O&M Manual. These engineering controls include the following:

- South Landfill;
- Waste Management Area (WMA) I;
- PCB Cells;

- South Surface Water Diversion Berm;
- West End Landfill and the Alabama Power Company (APCO) Switchyard;
- WMA II;
- Old Limestone Bed Surface Impoundment;
- MCC Warehouse;
- Lined Plant Storm Sewer;
- The Walking Trail;
- Former PCB Production Area;
- Area A;
- Areas C and D;
- Area E;
- Area H;
- Autoclave Unit Area;
- Solid Waste Management Unit (SWMU) 1 Corrective Action Interceptor Well System;
- WMA II Corrective Action Interceptor Well System;
- OW-10 and OW-21A Expansions to the Corrective Action Interceptor Well Systems;
- Groundwater Corrective Action Systems; and
- Carbon Treatment Systems.

The O&M manual also provides inspection frequencies, forms, and guidance on performing the on-going O&M activities.

11.0 REFERENCES

Notice of Lodging of Proposed Consent Decree for Remedial Design/Remedial Action for Operable Unit No. 3, Case 1:02-cv-00749-KOB (U.S. District Court forthe Northeastern District of Alabama, Eastern Division 12 6, 2012).

Golder Associates Inc. (2015a). Design Criteria Report and Final Remedial Design, Operable Unit 3 – Anniston PCB Site, 28 January 2015.

Golder Associates Inc. (2015b). OU-3 Remedial Action Work Plan, Anniston PCB Site, 5 June 2015.

USEPA. (1986). Technical Guidance Document: Construction Quality Assurance for Hazardous Waste Land Disposal Facilities. Washington, D.C.: Office of Solid Waste and Emergency Responses, U.S. Environmental Protection Agency.

USEPA. (2001). Administrative Order on Consent for Removal Action. Docket No. CER-04-2002-3752. United States Environmental Protection Agency.

USEPA. (2011, September 29). Interim Record of Decision: Summary of Remedial Alternative Selection Operable Unit 3, Anniston PCB Site, Calhoun County, Alabama. Atlanta, GA: U.S Environmental Protection Agency, Region 4.

USEPA. (2013, November 25). Letter from Pam Scully approving the Remedial Design Work Plan, Rev. 1.0, Operable Unit 3, Anniston PCB Site, Anniston, Alabama. U.S. Environmental Protection Agency, Region 4.

TABLES

Table 1 - Summary of Key Material Quantities

Item	Units	Area A	Area E	Areas C&D	PCB Cells	Autoclave Unit	Other	Total
Waste Disposal	tons	186	67	59	21	461	409	1203
Subgrade Material	cy	2835	401	0	7468	0	612	11316
Geomembrane Liner	sf	160833	22247	0	321547	0	0	504627
Geocomposite	sf	160833	22247	0	321547	0	0	504627
DGA Cover	tons	0	0	15120	0	0	0	15120
DGA Subgrade	tons	0	0	4791	0	0	0	4791
Geocells	sf	0	0	160000	0	0	0	160000
Cover Soil	cy	5866	758	0	13076	0		19700
Topsoil	cy	3063	376	0	6264	0	0	9703
Concrete Cover	sf	9328	0	0	0	6800	0	16128

sf - square feet

cy - cubic yards

DGA - Dense Graded Aggregate

DGA cover was 1-ft thick

TABLE 2 - SUMMARY OF FIELD QUALITY ASSURANCE TESTS ON SUBGRADE

DATE	TEST ID	AREA	PROBE DEPTH (IN)	TEST METHOD	IN SITU VALUE		REFERENCE VALUES			PERCENT COMPACT. (%)	COMPACT. PASS/ FAIL	Δ OPT. MOISTURE (%)	MOIST. PASS/ FAIL	FINAL	REMARKS
					DRY DENSITY (PCF)	MOIST. CONTENT (%)	CURVE NO.	MAX. DRY DENSITY (PCF)	MOIST. CONTENT (%)						
9/22/2015	1	PCB Cells	4	NG	112.6	7.9	CMT-01	116.6	12.3	96.6	P	-4.4	F	F	Re-test performed
9/22/2015	DC-1	PCB Cells	--	DC	112.2	10.3	CMT-01	116.6	12.3	96.2	P	-2.0	P	P	
9/22/2015	2	PCB Cells	4	NG	114.8	6.8	CMT-01	116.6	12.3	98.5	P	-5.5	F	F	Re-test performed
9/22/2015	DC-2	PCB Cells	--	DC	106.7	7.9	CMT-01	116.6	12.3	91.5	F	-4.4	F	F	Re-test performed
10/7/2015	DC-2.1	PCB Cells	--	DC	117.2	11.1	CMT-02	119.0	12.0	98.5	P	-0.9	P	P	Retest of Test DC-2
9/22/2015	3	PCB Cells	4	NG	107.4	9.1	CMT-01	116.6	12.3	92.1	F	-3.2	F	F	Re-test performed
9/22/2015	DC-3	PCB Cells	--	DC	100.1	10.5	CMT-01	116.6	12.3	85.8	F	-1.8	P	F	Re-test performed
10/15/2015	DC-3.1	PCB Cells	--	DC	112.3	12.0	CMT-01	116.6	12.3	96.3	P	-0.3	P	P	Retest of Test DC-3
9/23/2015	4	PCB Cells	4	NG	117.3	11.0	CMT-01	116.6	12.3	100.6	P	-1.3	P	P	
10/15/2015	DC-4	PCB Cells	--	DC	109.7	10.7	CMT-01	116.6	12.3	94.1	F	-1.6	P	F	Same location as PCB-4
10/1/2015	5	PCB Cells	4	NG	111.3	12.4	CMT-01	116.6	12.3	95.5	P	0.1	P	P	
10/1/2015	6	PCB Cells	4	NG	112.2	9.8	CMT-01	116.6		96.2	P	9.8	F	F	
10/1/2015	7	PCB Cells	4	NG	117.7	8.4	CMT-01	116.6	12.3	100.9	P	-3.9	F	F	Re-test performed
10/5/2015	8	PCB Cells	4	NG	111.6	9.7	CMT-01	116.6	12.3	95.7	P	-2.6	P	P	
10/6/2015	9	PCB Cells	4	NG	118.8	13.2	CMT-01	116.6	12.3	101.9	P	0.9	P	P	Re-test of PCB-1
10/6/2015	10	PCB Cells	4	NG	119.4	10.5	CMT-01	116.6	12.3	102.4	P	-1.8	P	P	Re-test of PCB-2 and PCB-7
10/6/2015	11	PCB Cells	4	NG	120.4	11.0	CMT-01	116.6	12.3	103.3	P	-1.3	P	P	
10/6/2015	12	PCB Cells	4	NG	114.7	10.7	CMT-01	116.6	12.3	98.4	P	-1.6	P	P	
10/7/2015	13	PCB Cells	4	NG	114.8	12.3	CMT-02	119.0	12.0	96.5	P	0.3	P	P	Retest of PCB-3
10/7/2015	14	PCB Cells	4	NG	112.3	12.1	CMT-03	117.5	13.0	95.6	P	-0.9	P	P	
10/7/2015	15	PCB Cells	4	NG	116.1	12.7	CMT-03	117.5	13.0	98.8	P	-0.3	P	P	
10/7/2015	16	PCB Cells	4	NG	114.3	12.4	CMT-02	119.0	12.0	96.1	P	0.4	P	P	
10/9/2015	17	PCB Cells	4	NG	112.8	12.1	CMT-03	117.5	13.0	96.0	P	-0.9	P	P	
10/9/2015	18	PCB Cells	4	NG	117.2	10.9	CMT-03	117.5	13.0	99.7	P	-2.1	P	P	
10/9/2015	19	PCB Cells	4	NG	119.0	8.4	CMT-03	117.5	13.0	101.3	P	-4.6	F	F	Re-test performed
10/9/2015	20	PCB Cells	4	NG	116.4	10.9	CMT-03	117.5	13.0	99.1	P	-2.1	P	P	Re-test of PCB-19

TABLE 2 - SUMMARY OF FIELD QUALITY ASSURANCE TESTS ON SUBGRADE

DATE	TEST ID	AREA	PROBE DEPTH (IN)	TEST METHOD	IN SITU VALUE		REFERENCE VALUES			PERCENT COMPACT. (%)	COMPACT. PASS/ FAIL	Δ OPT. MOISTURE (%)	MOIST. PASS/ FAIL	FINAL	REMARKS
					DRY DENSITY (PCF)	MOIST. CONTENT (%)	CURVE NO.	MAX. DRY DENSITY (PCF)	MOIST. CONTENT (%)						
3/8/2016	A-1	Area A	4	NG	111.8	15.0	CMT-04	110.8	16.9	100.9	P	-1.9	P	P	
3/8/2016	A-2	Area A	4	NG	109.2	16.6	CMT-04	110.8	16.9	98.6	P	-0.3	P	P	
3/8/2016	A-3	Area A	4	NG	113.2	15.5	CMT-04	110.8	16.9	102.2	P	-1.4	P	P	
3/9/2016	A-4	Area A	4	NG	108.7	15.1	CMT-04	110.8	16.9	98.1	P	-1.8	P	P	
3/9/2016	A-5	Area A	4	NG	107.2	14.8	CMT-04	110.8	16.9	96.8	P	-2.1	P	P	
3/9/2016	A-6	Area A	4	NG	115.0	14.2	CMT-04	110.8	16.9	103.8	P	-2.7	P	P	
3/8/2016	E-1	Area E	4	NG	108.7	15.3	CMT-04	110.8	16.9	98.1	P	-1.6	P	P	
3/8/2016	E-2	Area E	4	NG	108.6	15.6	CMT-04	110.8	16.9	98.0	P	-1.3	P	P	

NG: Nuclear Gauge
DC: Drive Cylinder

TABLE 3 - SUMMARY OF FIELD QUALITY ASSURANCE TESTS ON DGA

DATE	TEST ID	AREA	PROBE DEPTH (IN)	TEST METHOD	IN SITU VALUE		REFERENCE VALUES			PERCENT COMPACT. (%)	COMPACT. PASS/ FAIL	Δ OPT. MOISTURE (%)	MOIST. PASS/ FAIL	FINAL	REMARKS
					DRY DENSITY (PCF)	MOIST. CONTENT (%)	CURVE NO.	MAX. DRY DENSITY (PCF)	MOIST. CONTENT (%)						
11/6/2015	1	Areas C & D	4	NG	137.2	2.4	DGA	142.6	5.2	96.2	P	-2.8	P	P	
11/6/2015	2	Areas C & D	4	NG	135.8	3.1	DGA	142.6	5.2	95.2	P	-2.1	P	P	
11/6/2015	3	Areas C & D	4	NG	132.1	2.6	DGA	142.6	5.2	92.6	F	-2.6	P	F	
11/6/2015	4	Areas C & D	4	NG	135.7	2.3	DGA	142.6	5.2	95.2	P	-2.9	P	P	
11/6/2015	5	Areas C & D	4	NG	136.7	2.5	DGA	142.6	5.2	95.9	P	-2.7	P	P	Retest of Test 3
11/6/2015	6	Areas C & D	4	NG	135.8	2.5	DGA	142.6	5.2	95.2	P	-2.7	P	P	
11/6/2015	7	Areas C & D	4	NG	135.5	2.8	DGA	142.6	5.2	95.0	P	-2.4	P	P	
11/10/2015	8	Areas C & D	4	NG	135.5	3.3	DGA	142.6	5.2	95.0	P	-1.9	P	P	
11/11/2015	9	Areas C & D	4	NG	127.4	3.0	DGA	142.6	5.2	89.3	F	-2.2	P	F	
11/11/2015	10	Areas C & D	4	NG	135.5	3.3	DGA	142.6	5.2	95.0	P	-1.9	P	P	Retest of Test 9
11/11/2015	11	Areas C & D	4	NG	141.0	2.9	DGA	142.6	5.2	98.9	P	-2.3	P	P	

NG: Nuclear Gauge

Table 4 - Concrete Break Report Summary

Location of Pour	Set #	Spec. ID	Sampled By	Date of Concrete Pour	Batch ID (Ticket #)	Date Sample Received	Date of Sample Break	Days Since Pour	28 Day Design Strength	Compressive Strength (psi)	Strength as % of Design
Autoclave	1	A	Webb	8/21/2015	110891	8/22/2015	8/24/2015	3	3,000	2,819	94%
Autoclave	1	B	Webb	8/21/2015	110891	8/22/2015	8/28/2015	7	3,000	3,005	100%
Autoclave	1	C	Webb	8/21/2015	110891	8/22/2015	9/18/2015	28	3,000	3,853	128%
Autoclave	1	D	Webb	8/21/2015	110891	8/22/2015	HOLD		3,000		
Autoclave	2	A	Terracon	8/21/2015	110907	8/22/2015	8/24/2015	3	3,000	1,511	50%
Autoclave	2	B	Terracon	8/21/2015	110907	8/22/2015	8/28/2015	7	3,000	1,666	56%
Autoclave	2	C	Terracon	8/21/2015	110907	8/22/2015	9/18/2015	28	3,000	2,450	82%
Autoclave	2	D	Terracon	8/21/2015	110907	8/22/2015	9/18/2015	28	3,000	2,451	82%

Table 4 - Concrete Break Report Summary

Location of Pour	Set #	Spec. ID	Sampled By	Date of Concrete Pour	Batch ID (Ticket #)	Date Sample Received	Date of Sample Break	Days Since Pour	28 Day Design Strength	Compressive Strength (psi)	Strength as % of Design
Autoclave	3	A	Terracon	8/25/2015	111036	8/26/2015	8/28/2015	3	3,000	1,876	63%
Autoclave	3	B	Terracon	8/25/2015	111036	8/26/2015	9/1/2015	7	3,000	2,490	83%
Autoclave	3	C	Terracon	8/25/2015	111036	8/26/2015	9/22/2015	28	3,000	3,410	114%
Autoclave	3	D	Terracon	8/25/2015	111036	8/26/2015	9/22/2015	28	3,000	3,653	122%
Autoclave	4	A	Terracon	8/26/2015	111113	8/27/2015	8/31/2015	5	3,000	2,248	75%
Autoclave	4	B	Terracon	8/26/2015	111113	8/27/2015	9/2/2015	7	3,000	2,362	79%
Autoclave	4	C	Terracon	8/26/2015	111113	8/27/2015	9/23/2015	28	3,000	3,263	109%
Autoclave	4	D	Terracon	8/26/2015	111113	8/27/2015	9/23/2015	28	3,000	3,050	102%

Table 4 - Concrete Break Report Summary

Location of Pour	Set #	Spec. ID	Sampled By	Date of Concrete Pour	Batch ID (Ticket #)	Date Sample Received	Date of Sample Break	Days Since Pour	28 Day Design Strength	Compressive Strength (psi)	Strength as % of Design
Autoclave	5	A	Terracon	8/27/2015	111163	8/28/2015	8/31/2015	4	3,000	2,724	91%
Autoclave	5	B	Terracon	8/27/2015	111163	8/28/2015	9/3/2015	7	3,000	3,182	106%
Autoclave	5	C	Terracon	8/27/2015	111163	8/28/2015	9/24/2015	28	3,000	3,845	128%
Autoclave	5	D	Terracon	8/27/2015	111163	8/28/2015	9/24/2015	28	3,000	3,725	124%
Autoclave	6	A	Terracon	8/28/2015	111238	8/29/2015	8/31/2015	3	3,000	3,041	101%
Autoclave	6	B	Terracon	8/28/2015	111238	8/29/2015	9/4/2015	7	3,000	3,465	115%
Autoclave	6	C	Terracon	8/28/2015	111238	8/29/2015	9/25/2015	28	3,000	4,143	138%
Autoclave	6	D	Terracon	8/28/2015	111238	8/29/2015	9/25/2015	28	3,000	4,087	136%

Table 4 - Concrete Break Report Summary

Location of Pour	Set #	Spec. ID	Sampled By	Date of Concrete Pour	Batch ID (Ticket #)	Date Sample Received	Date of Sample Break	Days Since Pour	28 Day Design Strength	Compressive Strength (psi)	Strength as % of Design
Area E Wall Footing	7	A	Terracon	10/6/2015	112524	10/7/2015	10/9/2015	3	4,000	2,998	75%
Area E Wall Footing	7	B	Terracon	10/6/2015	112524	10/7/2015	10/13/2015	7	4,000	4,062	102%
Area E Wall Footing	7	C	Terracon	10/6/2015	112524	10/7/2015	11/3/2015	28	4,000	4,829	121%
Area E Wall Footing	7	D	Terracon	10/6/2015	112524	10/7/2015	11/3/2015	28	4,000	4,819	120%
Area E Wall Footing	8	A	Terracon	10/6/2015	112533	10/7/2015	10/9/2015	3	4,000	3,018	75%
Area E Wall Footing	8	B	Terracon	10/6/2015	112533	10/7/2015	10/13/2015	7	4,000	3,829	96%
Area E Wall Footing	8	C	Terracon	10/6/2015	112533	10/7/2015	11/3/2015	28	4,000	4,535	113%
Area E Wall Footing	8	D	Terracon	10/6/2015	112533	10/7/2015	11/3/2015	28	4,000	4,684	117%
Area A Slab	9	A	Terracon	10/9/2015	112678	10/9/2015	10/12/2015	3	4,000	3,161	79%
Area A Slab	9	B	Terracon	10/9/2015	112678	10/9/2015	10/16/2015	7	4,000	3,831	96%
Area A Slab	9	C	Terracon	10/9/2015	112678	10/9/2015	11/6/2015	28	4,000	4,392	110%
Area A Slab	9	D	Terracon	10/9/2015	112678	10/9/2015	11/6/2015	28	4,000	4,988	125%

Table 4 - Concrete Break Report Summary

Location of Pour	Set #	Spec. ID	Sampled By	Date of Concrete Pour	Batch ID (Ticket #)	Date Sample Received	Date of Sample Break	Days Since Pour	28 Day Design Strength	Compressive Strength (psi)	Strength as % of Design
Area A Slab	10	A	Terracon	10/12/2015	112731	10/12/2015	10/15/2015	3	4,000	3,347	84%
Area A Slab	10	B	Terracon	10/12/2015	112731	10/12/2015	10/19/2015	7	4,000	3,642	91%
Area A Slab	10	C	Terracon	10/12/2015	112731	10/12/2015	11/9/2015	28	4,000	5,227	131%
Area A Slab	10	D	Terracon	10/12/2015	112731	10/12/2015	11/9/2015	28	4,000	4,899	122%
Area A Slab	11	A	Terracon	10/12/2015	112735	10/12/2015	10/15/2015	3	4,000	2,973	74%
Area A Slab	11	B	Terracon	10/12/2015	112735	10/12/2015	10/19/2015	7	4,000	3,343	84%
Area A Slab	11	C	Terracon	10/12/2015	112735	10/12/2015	11/9/2015	28	4,000	4,645	116%
Area A Slab	11	D	Terracon	10/12/2015	112735	10/12/2015	11/9/2015	28	4,000	4,635	116%

Table 4 - Concrete Break Report Summary

Location of Pour	Set #	Spec. ID	Sampled By	Date of Concrete Pour	Batch ID (Ticket #)	Date Sample Received	Date of Sample Break	Days Since Pour	28 Day Design Strength	Compressive Strength (psi)	Strength as % of Design
Area A Slab	12	A	Terracon	10/13/2015	112764	10/14/2015	10/16/2015	3	4,000	2,979	74%
Area A Slab	12	B	Terracon	10/13/2015	112764	10/14/2015	10/20/2015	7	4,000	3,682	92%
Area A Slab	12	C	Terracon	10/13/2015	112764	10/14/2015	11/10/2015	28	4,000	4,844	121%
Area A Slab	12	D	Terracon	10/13/2015	112764	10/14/2015	11/10/2015	28	4,000	4,721	118%
Area A Slab	13	A	Terracon	10/14/2015	112791	10/15/2015	10/19/2015	5	4,000	3,683	92%
Area A Slab	13	B	Terracon	10/14/2015	112791	10/15/2015	10/21/2015	7	4,000	3,545	89%
Area A Slab	13	C	Terracon	10/14/2015	112791	10/15/2015	11/11/2015	28	4,000	5,068	127%
Area A Slab	13	D	Terracon	10/14/2015	112791	10/15/2015	11/11/2015	28	4,000	4,859	121%
Area E Wall	14	A	Terracon	10/21/2015	113040	10/22/2015	10/26/2015	5	4,000	2,737	68%
Area E Wall	14	B	Terracon	10/21/2015	113040	10/22/2015	10/28/2015	7	4,000	2,768	69%
Area E Wall	14	C	Terracon	10/21/2015	113040	10/22/2015	11/18/2015	28	4,000	4,029	101%
Area E Wall	14	D	Terracon	10/21/2015	113040	10/22/2015	11/18/2015	28	4,000	4,056	101%

Table 4 - Concrete Break Report Summary

Location of Pour	Set #	Spec. ID	Sampled By	Date of Concrete Pour	Batch ID (Ticket #)	Date Sample Received	Date of Sample Break	Days Since Pour	28 Day Design Strength	Compressive Strength (psi)	Strength as % of Design
Area E Wall	15	A	Terracon	10/23/2015	113149	10/24/2015	10/26/2015	3	4,000	2,814	70%
Area E Wall	15	B	Terracon	10/23/2015	113149	10/24/2015	10/30/2015	7	4,000	3,175	79%
Area E Wall	15	C	Terracon	10/23/2015	113149	10/24/2015	11/20/2015	28	4,000	4,592	115%
Area E Wall	15	D	Terracon	10/23/2015	113149	10/24/2015	11/20/2015	28	4,000	4,288	107%
Area A Slab	16	A	Terracon	10/29/2015	113189	10/29/2015	11/2/2015	4	4,000	3,134	78%
Area A Slab	16	B	Terracon	10/29/2015	113189	10/29/2015	11/5/2015	7	4,000	3,779	94%
Area A Slab	16	C	Terracon	10/29/2015	113189	10/29/2015	11/26/2015	28	4,000	5,114	128%
Area A Slab	17	A	Terracon	10/30/2015	113235	10/31/2015	11/2/2015	3	4,000	2,446	61%
Area A Slab	17	B	Terracon	10/30/2015	113235	10/31/2015	11/6/2015	7	4,000	3,648	91%
Area A Slab	17	C	Terracon	10/30/2015	113235	10/31/2015	11/27/2015	28	4,000	4,501	113%

Table 4 - Concrete Break Report Summary

Location of Pour	Set #	Spec. ID	Sampled By	Date of Concrete Pour	Batch ID (Ticket #)	Date Sample Received	Date of Sample Break	Days Since Pour	28 Day Design Strength	Compressive Strength (psi)	Strength as % of Design
Area A Slab	18	A	Terracon	11/4/2015	113317	11/5/2015	11/9/2015	5	4,000	3,632	91%
Area A Slab	18	B	Terracon	11/4/2015	113317	11/5/2015	11/11/2015	7	4,000	3,757	94%
Area A Slab	18	C	Terracon	11/4/2015	113317	11/5/2015	12/2/2015	28	4,000	5,128	128%
Area A Slab	19	A	Terracon	11/5/2015	113371	11/6/2015	11/9/2015	4	4,000	3,065	77%
Area A Slab	19	B	Terracon	11/5/2015	113371	11/6/2015	11/12/2015	7	4,000	3,683	92%
Area A Slab	19	C	Terracon	11/5/2015	113371	11/6/2015	12/3/2015	28	4,000	4,849	121%
Area A Slab	20	A	Terracon	11/10/2015	113434	11/11/2015	11/13/2015	3	4,000	3,411	85%
Area A Slab	20	B	Terracon	11/10/2015	113434	11/11/2015	11/17/2015	7	4,000	3,551	89%
Area A Slab	20	C	Terracon	11/10/2015	113434	11/11/2015	12/8/2015	28	4,000	4,753	119%
Area A Slab	21	A	Terracon	11/10/2015	113445	11/11/2015	11/13/2015	3	4,000	2,981	75%
Area A Slab	21	B	Terracon	11/10/2015	113445	11/11/2015	11/17/2015	7	4,000	3,237	81%
Area A Slab	21	C	Terracon	11/10/2015	113445	11/11/2015	12/8/2015	28	4,000	4,296	107%

Table 4 - Concrete Break Report Summary

Location of Pour	Set #	Spec. ID	Sampled By	Date of Concrete Pour	Batch ID (Ticket #)	Date Sample Received	Date of Sample Break	Days Since Pour	28 Day Design Strength	Compressive Strength (psi)	Strength as % of Design
Area A Slab	22	A	Terracon	11/11/2015	113464	11/12/2015	11/14/2015	3	4,000	2,816	70%
Area A Slab	22	B	Terracon	11/11/2015	113464	11/12/2015	11/18/2015	7	4,000	3,117	78%
Area A Slab	22	C	Terracon	11/11/2015	113464	11/12/2015	12/9/2015	28	4,000	4,542	114%
Area A Slab	23	A	Terracon	11/12/2015	113500	11/12/2015	11/15/2015	3	4,000	3,547	89%
Area A Slab	23	B	Terracon	11/12/2015	113500	11/12/2015	11/19/2015	7	4,000	3,785	95%
Area A Slab	23	C	Terracon	11/12/2015	113500	11/12/2015	12/10/2015	28	4,000	5,227	131%
Area A Slab	24	A	Terracon	11/13/2015	113532	11/13/2015	11/16/2015	3	4,000	3,429	86%
Area A Slab	24	B	Terracon	11/13/2015	113532	11/13/2015	11/20/2015	7	4,000	4,080	102%
Area A Slab	24	C	Terracon	11/13/2015	113532	11/13/2015	12/11/2015	28	4,000	4,725	118%
Area E Sign	25	A	Terracon	11/19/2015	113724	11/19/2015	11/22/2015	3	4,000	3,278	82%
Area E Sign	25	B	Terracon	11/19/2015	113724	11/19/2015	11/26/2015	7	4,000	4,470	112%
Area E Sign	25	C	Terracon	11/19/2015	113724	11/19/2015	12/17/2015	28	4,000	5,476	137%

Table 4 - Concrete Break Report Summary

Location of Pour	Set #	Spec. ID	Sampled By	Date of Concrete Pour	Batch ID (Ticket #)	Date Sample Received	Date of Sample Break	Days Since Pour	28 Day Design Strength	Compressive Strength (psi)	Strength as % of Design
Area E Footing	26	A	Terracon	11/23/2015	113799	11/24/2015	11/30/2015	7	4,000	3,976	99%
Area E Footing	26	B	Terracon	11/23/2015	113799	11/24/2015	12/21/2015	28	4,000	5,042	126%
Area E Footing	26	C	Terracon	11/23/2015	113799	11/24/2015	12/21/2015	28	4,000	4,979	124%
Area E Footing, NE Corner	27	A	Terracon	12/10/2015	114380	12/11/2015	12/13/2015	3	4,000	2,702	68%
Area E Footing, NE Corner	27	B	Terracon	12/10/2015	114380	12/11/2015	12/17/2015	7	4,000	3,549	89%
Area E Footing, NE Corner	27	C	Terracon	12/10/2015	114380	12/11/2015	1/7/2016	28	4,000	4,885	122%
Area E Footing, NE Corner	27	D	Terracon	12/10/2015	114380	12/11/2015	1/7/2016	28	4,000	4,683	117%

Table 4 - Concrete Break Report Summary

Location of Pour	Set #	Spec. ID	Sampled By	Date of Concrete Pour	Batch ID (Ticket #)	Date Sample Received	Date of Sample Break	Days Since Pour	28 Day Design Strength	Compressive Strength (psi)	Strength as % of Design
Area E Footing, E Side	28	A	Terracon	1/12/2016	115118	1/13/2016	1/18/2016	6	4,000	3,815	95%
Area E Footing, E Side	28	B	Terracon	1/12/2016	115118	1/13/2016	1/19/2016	7	4,000	4,043	101%
Area E Footing, E Side	28	C	Terracon	1/12/2016	115118	1/13/2016	2/9/2016	28	4,000	5,208	130%
Area E Footing, E Side	28	D	Terracon	1/12/2016	115118	1/13/2016	2/9/2016	28	4,000	5,444	136%
Area E Wall	29	A	Terracon	1/25/2016	115376	1/26/2016	2/1/2016	7	4,000	3,815	95%
Area E Wall	29	B	Terracon	1/25/2016	115376	1/26/2016	2/1/2016	7	4,000	3,840	96%
Area E Wall	29	C	Terracon	1/25/2016	115376	1/26/2016	2/22/2016	28	4,000	6,814	170%
Area E NW Corner	30	A	Terracon	2/2/2016	115666	2/3/2016	2/5/2016	3	4,000	3,628	91%
Area E NW Corner	30	B	Terracon	2/2/2016	115666	2/3/2016	2/9/2016	7	4,000	4,015	100%
Area E NW Corner	30	C	Terracon	2/2/2016	115666	2/3/2016	3/1/2016	28	4,000	4,838	121%

Table 4 - Concrete Break Report Summary

Location of Pour	Set #	Spec. ID	Sampled By	Date of Concrete Pour	Batch ID (Ticket #)	Date Sample Received	Date of Sample Break	Days Since Pour	28 Day Design Strength	Compressive Strength (psi)	Strength as % of Design
Area A, NE Vault Footings	31	A	Terracon	2/11/2016	115912	2/12/2016	2/14/2016	3	4,000	3,249	81%
Area A, NE Vault Footings	31	B	Terracon	2/11/2016	115912	2/12/2016	2/18/2016	7	4,000	3,591	90%
Area A, NE Vault Footings	31	C	Terracon	2/11/2016	115912	2/12/2016	3/10/2016	28	4,000	5,204	130%
Area E Wall, E side of control room	32	A	Terracon	2/18/2016	116149	2/19/2016	2/21/2016	3	4,000	3,089	77%
Area E Wall, E side of control room	32	B	Terracon	2/18/2016	116149	2/19/2016	2/25/2016	7	4,000	3,328	83%
Area E Wall, E side of control room	32	C	Terracon	2/18/2016	116149	2/19/2016	3/17/2016	28	4,000	4,469	112%
Area A, western vault footer	33	A	Terracon	2/25/2016		2/26/2016	3/24/2016	28	4,000	5,033	126%
Area A, western vault footer	33	B	Terracon	2/25/2016		2/26/2016	3/24/2016	28	4,000	5,003	125%
Area A, western vault footer	33	C	Terracon	2/25/2016		2/26/2016	3/24/2016	28	4,000	5,099	127%

Table 4 - Concrete Break Report Summary

Location of Pour	Set #	Spec. ID	Sampled By	Date of Concrete Pour	Batch ID (Ticket #)	Date Sample Received	Date of Sample Break	Days Since Pour	28 Day Design Strength	Compressive Strength (psi)	Strength as % of Design
Area A, western vault Wall	34	A	Terracon	3/2/2016	116461	3/3/2016	3/5/2016	3	4,000	3,501	88%
Area A, western vault Wall	34	B	Terracon	3/2/2016	116461	3/3/2016	3/9/2016	7	4,000	3,943	99%
Area A, western vault Wall	34	C	Terracon	3/2/2016	116461	3/3/2016	3/30/2016	28	4,000	5,076	127%
Area A. Upper valve vault	35	A	Terracon	3/8/2016	116613	3/8/2016	3/11/2016	3	4,000	2,597	65%
Area A. Upper valve vault	35	B	Terracon	3/8/2016	116613	3/8/2016	3/15/2016	7	4,000	2,956	74%
Area A. Upper valve vault	35	C	Terracon	3/8/2016	116613	3/8/2016	4/5/2016	28	4,000	4,550	114%
Area A. Upper valve vault	36	A	Terracon	3/9/2016	116669	3/10/2016	3/14/2016	5	4,000	3,137	78%
Area A. Upper valve vault	36	B	Terracon	3/9/2016	116669	3/10/2016	3/16/2016	7	4,000	3,643	91%
Area A. Upper valve vault	36	C	Terracon	3/9/2016	116669	3/10/2016	4/6/2016	28	4,000	4,340	109%

Table 4 - Concrete Break Report Summary

Location of Pour	Set #	Spec. ID	Sampled By	Date of Concrete Pour	Batch ID (Ticket #)	Date Sample Received	Date of Sample Break	Days Since Pour	28 Day Design Strength	Compressive Strength (psi)	Strength as % of Design
Area E SW Corner Footing	37	A	Terracon	4/26/2016	118183	4/26/2016	4/27/2016	1	6,000	3,138	52%
Area E SW Corner Footing	37	B	Terracon	4/26/2016	118183	4/26/2016	4/29/2016	3	6,000	3,606	60%
Area E SW Corner Footing	37	C	Terracon	4/26/2016	118183	4/26/2016	5/3/2016	7	6,000	4,194	70%
Area E SW Corner Footing	37	D	Terracon	4/26/2016	118183	4/26/2016	5/24/2016	28	6,000	5,500	92%
Area E SW Corner Wall	38	A	Terracon	4/29/2016	118352	4/29/2016	5/2/2016	3	4,000	2,787	70%
Area E SW Corner Wall	38	B	Terracon	4/29/2016	118352	4/29/2016	5/6/2016	7	4,000	3,094	77%
Area E SW Corner Wall	38	C	Terracon	4/29/2016	118352	4/29/2016	5/27/2016	28	4,000	4,170	104%
Sidewalk at visitor parking	39	A	Terracon	5/25/2016	119122	5/26/2016	5/27/2016	2	4,000	2,708	68%
Sidewalk at visitor parking	39	B	Terracon	5/25/2016	119122	5/26/2016	6/1/2016	7	4,000	3,413	85%

Table 5 - Hydrostatic Pressure Test Results

Carbon Treatment System	Pipe Segments Tested	Date of Test	Test Pressure	Test Result	Comment
CTS #1	Influent pipes from IW-26 & IW-27 vaults; Interior piping within CTS enclosure; Effluent pipe from CTS to manhole location	3/8/2016	83	Pass	Effluent pipe not connected to manhole. Pipe capped near manhole and terminated aboveground for future tie-in to manhole.
CTS #2	Influent pipes from IW-28, IW-29 & IW-14A vaults; Interior piping within CTS enclosure; Effluent pipe from CTS to IW-14A area	1/11/2017	83	Pass	New 3" effluent pipe installed up to IW-14A area and test valve installed.
CTS #2	Effluent pipe from IW-14A area to inlet of tank VE-200	1/16/2017	28	Pass	Test performed to verify tie-in connection between the new 3" effluent pipe and the existing 2" effluent pipe was sound. Test pressure of 28 PSIG selected based on expected operating pressure at this location with a 1.5 safety factor.

FIGURES

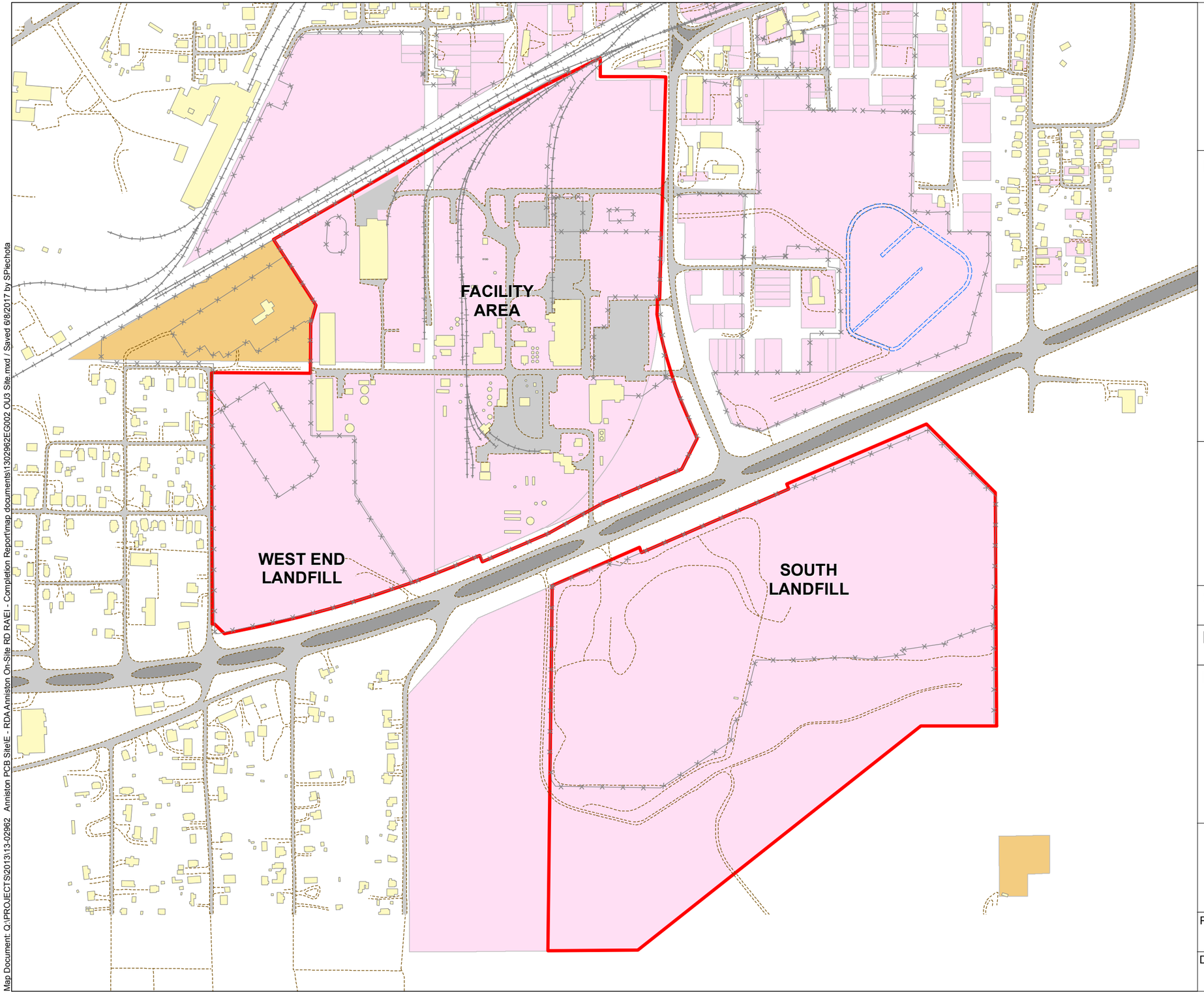

ANNISTON PCB SITE
OU-3 SITE PLAN

LEGEND

- FENCE
- DRAINAGE BASIN
- RAILROAD
- ROAD
- OU-3 BOUNDARY
- BUILDING FOOTPRINT
- ALABAMA POWER PROPERTY
- SOLUTIA INC. PROPERTY

NOTES

1.) OU - Operable Unit

REFERENCES

1.) Property Parcels: Calhoun County Tax Office
2.) Solutia Owned Property Parcels in South Landfill: "ALTA/ACSM LAND TITLE SURVEY OF: OPERABLE UNIT 3 OF THE ANNISTON PCB SITE" by Lowery & Associates Land Surveying, LLC; April 17, 2013.

SOURCE	ZONE
Golder Associates (on-site base map)	Alabama East 101
MAP PROJECTION	**DATUM**
US State Plane	NAD83

LOCATION MAP



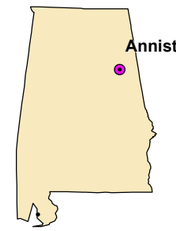

PRODUCED BY:	CHECKED BY:	REVIEWED BY:
SEP	ARF	SJM
DATE:	**PROJECT NO:**	**FIGURE NO.**
6/8/2017	130-2962CQA	2.1

Map Document: Q:\PROJECTS\2013\13-02962 Anniston PCB Site\E - RDA Anniston On-Site RD RAVEI - Completion Report\map documents\13029962EG002 OU3 Site.mxd / Saved 6/8/2017 by SPiechota

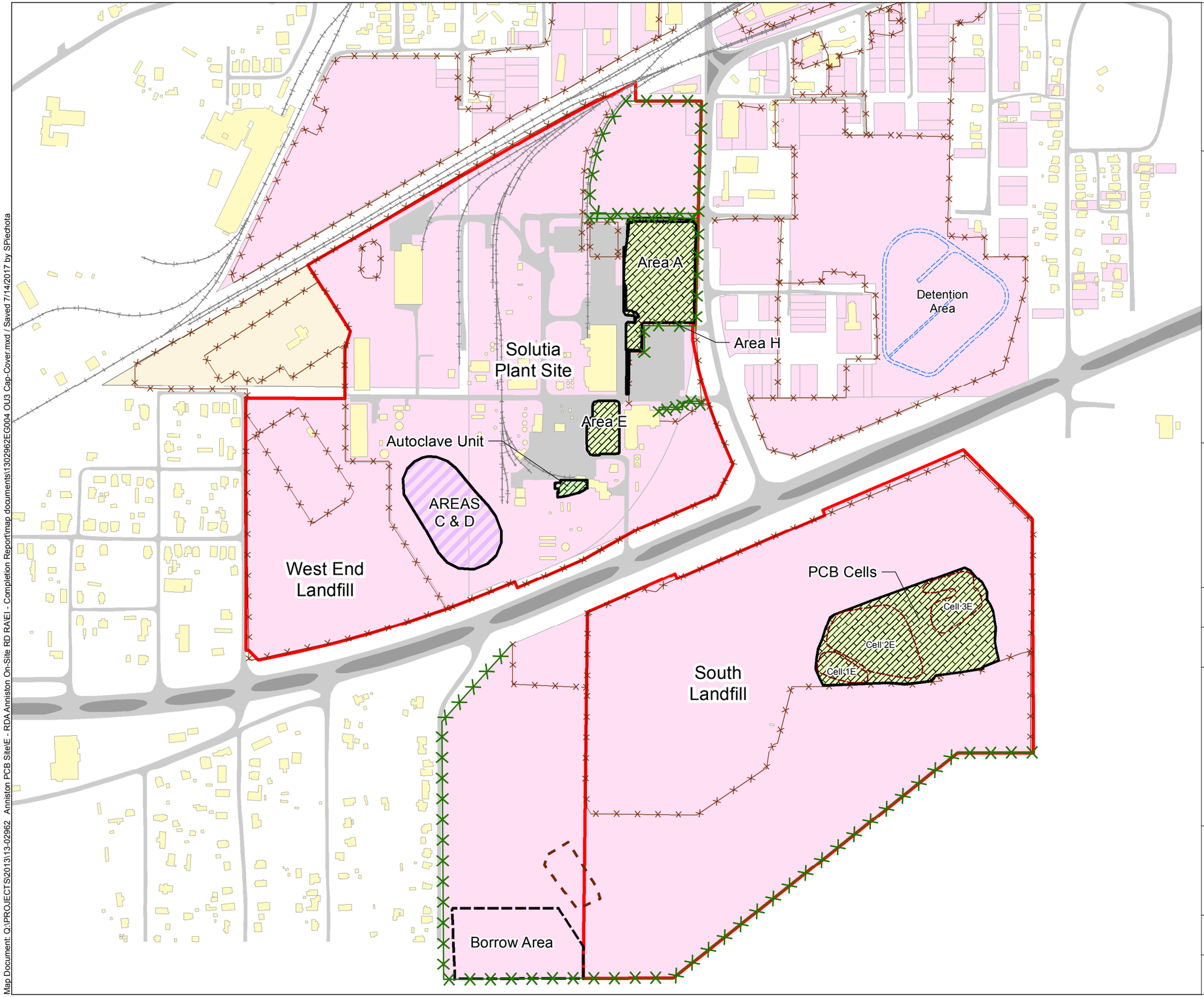

CAP & COVERS
OU-3 REMEDIAL COMPONENTS

LEGEND

- EXISTING FENCE
- NEW FENCE
- RAILROAD
- DRAINAGE BASIN
- BUILDING FOOTPRINT
- DENSE GRADED AGGREGATE (DGA)
- IMPERMEABLE COVER (GEOMEMBRANE OR PAVED)
- OU-3 BOUNDARY
- SOLUTIA INC. PROPERTY
- ALABAMA POWER CO

NOTES

1.) OU - Operable Unit

REFERENCES

1.) Property Parcels: Calhoun County Tax Office
2.) Solutia Owned Property Parcels in South Landfill: "ALTA/ACSM LAND TITLE SURVEY OF: OPERABLE UNIT 3 OF THE ANNISTON PCB SITE" by Lowery & Associates Land Surveying, LLC; April 17, 2013.

SOURCE	ZONE
Golder Associates (on-site base map)	Alabama East 101
MAP PROJECTION	**DATUM**
US State Plane	NAD83

LOCATION MAP



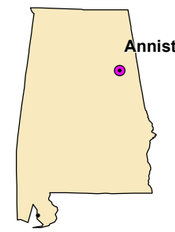

PRODUCED BY:	CHECKED BY:	REVIEWED BY:
SEP	ARF	SJM
DATE:	**PROJECT NO:**	**FIGURE NO.**
7/14/2017	130-2962CQA	2.2

Map Document: Q:\PROJECTS\2013\13-02962 Anniston PCB Site\E - RDA Anniston On-Site RD RAE\ - Completion Report\map documents\13029962EG004 OU3 Cap-Cover.mxd / Saved 7/14/2017 by SPiechota

GROUNDWATER EXTRACTION SYSTEM
OU-3 REMEDIAL COMPONENTS

CTS #1
IW-27
IW-26
OW-21A
STORAGE TANK AND ELECTRONIC CONTROLS
IW-22
IW-16
IW-19
IW-17
IW-20
IW-23
IW-21
DW-01
IW-18
IW-25
MW-20A
IW-24
OW-10
IW-28
IW-29
CTS #2
OWR-12
OW-08A
IW-14A
LIFT STATION
IW-15
OW-16A
IW-07
IW-08
IW-09
IW-10
IW-06
IW-11
IW-05
IW-12
IW-13
IW-04
IW-03
IW-02
IW-01
EXISTING CARBON TREATMENT
WEST END LANDFILL
SOUTH LANDFILL

LEGEND

- MONITORING WELL
- EXISTING INTERCEPTOR WELL
- EXISTING CARBON TREATMENT
- NEW CARBON TREATMENT
- FENCE
- DRAINAGE BASIN
- RAILROAD
- ROAD
- NEW PIPING (UNDERGROUND)
- SURFACE PIPING
- UNDERGROUND PIPING
- OU-3 BOUNDARY
- BUILDING FOOTPRINT

NOTES

1.) MNA - Monitored Natural Attenuation
2.) OU - Operable Unit
3.) CTS - Carbon Treatment System

SOURCE	ZONE
Golder Associates (on-site base map)	Alabama East 101
MAP PROJECTION	**DATUM**
US State Plane	NAD83

LOCATION MAP

N
W E
S

0 225 450
Feet

Anniston

Solutia

Golder Associates

PRODUCED BY:	CHECKED BY:	REVIEWED BY:
SEP	ARF	SJM
DATE:	PROJECT NO:	FIGURE NO.
6/8/2017	130-2962CQA	2.3

Map Document: Q:\PROJECTS\2013\13-02962_Anniston PCB Site\E - RDA Anniston On-Site RD RA\EI - Completion Report\map documents\130-2962E1005 OU3 GW Extract.mxd / Saved 6/8/2017 by SPiechota

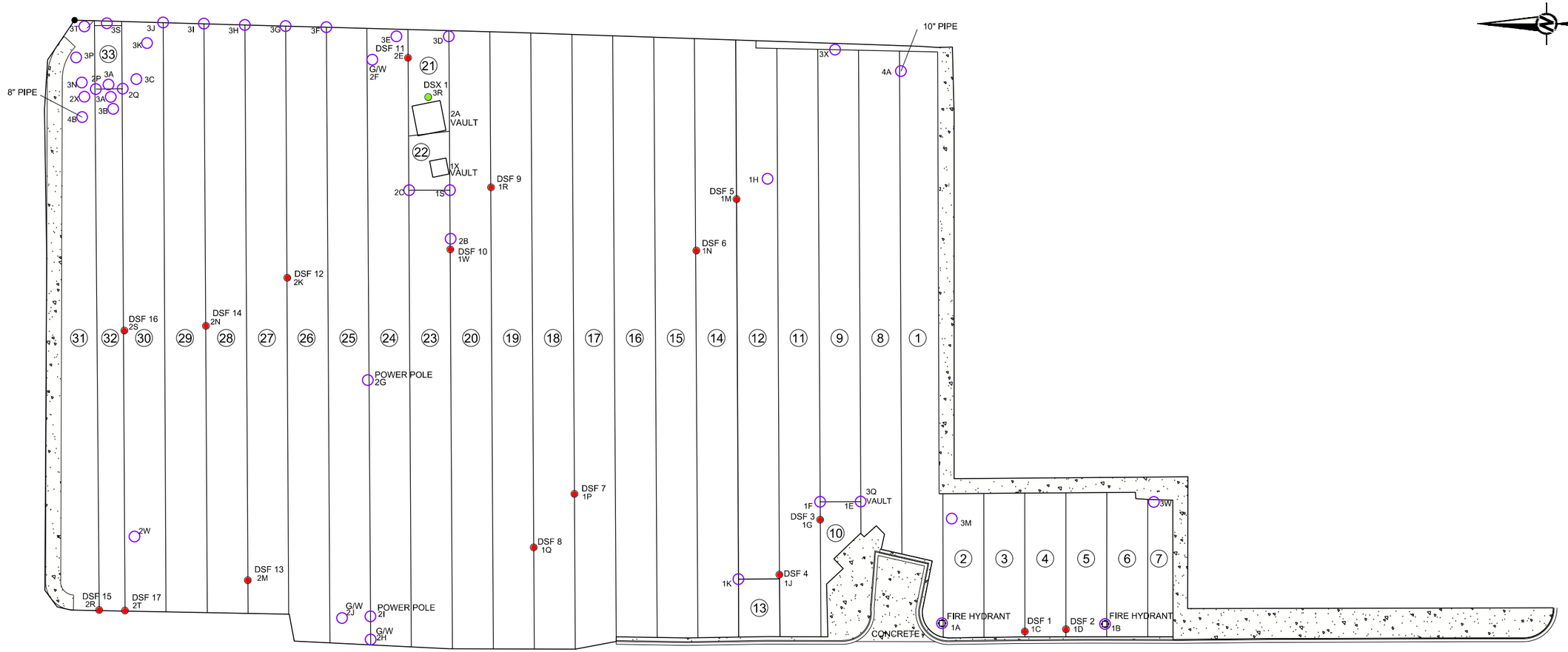

0 30 60 90
SCALE FEET

LEGEND

(5)	PANEL NUMBER
	DESTRUCTIVE SAMPLE FUSION (DSF)
	DESTRUCTIVE SAMPLE EXTRUSION (DSX)
	DEFECT REPAIR
	CONCRETE

NOTES

1.) LOCATIONS OF SAMPLES AND DEFECTS ARE APPROXIMATE.

2.) G/W - GRIND AND WELD.

REV	DATE	REVISION DESCRIPTION	DES	CADD	CHK	RVW
△	-	-	-	-	-	-

PROJECT

PHARMACIA LLC / SOLUTIA INC.
OU-3 PCB SITE, ALABAMA

TITLE

AREA A
PANEL LAYOUT, DESTRUCTIVE TEST SAMPLE LOCATIONS, AND REPAIR LOCATIONS

Golder Associates

PROJECT No.		1302962CQA	FILE No.	1302962CQA4.1
DESIGN	SC	06/07/17	SCALE	AS SHOWN
CADD	SEP	06/07/17	FIGURE	4.1
CHECK	ARF	06/07/17		
REVIEW	SJM	12/22/17		

G:\$Active H\9433680 - Solutia\OU-3 RA Construction\As-Built\Panel Layouts\1302962CQA4.1.dwg | Layout: ANSI_B_FIGURE_LANDSCAPE | Modified: SPiechota 06/08/2017 11:51 AM | Plotted: SPiechota 06/08/2017

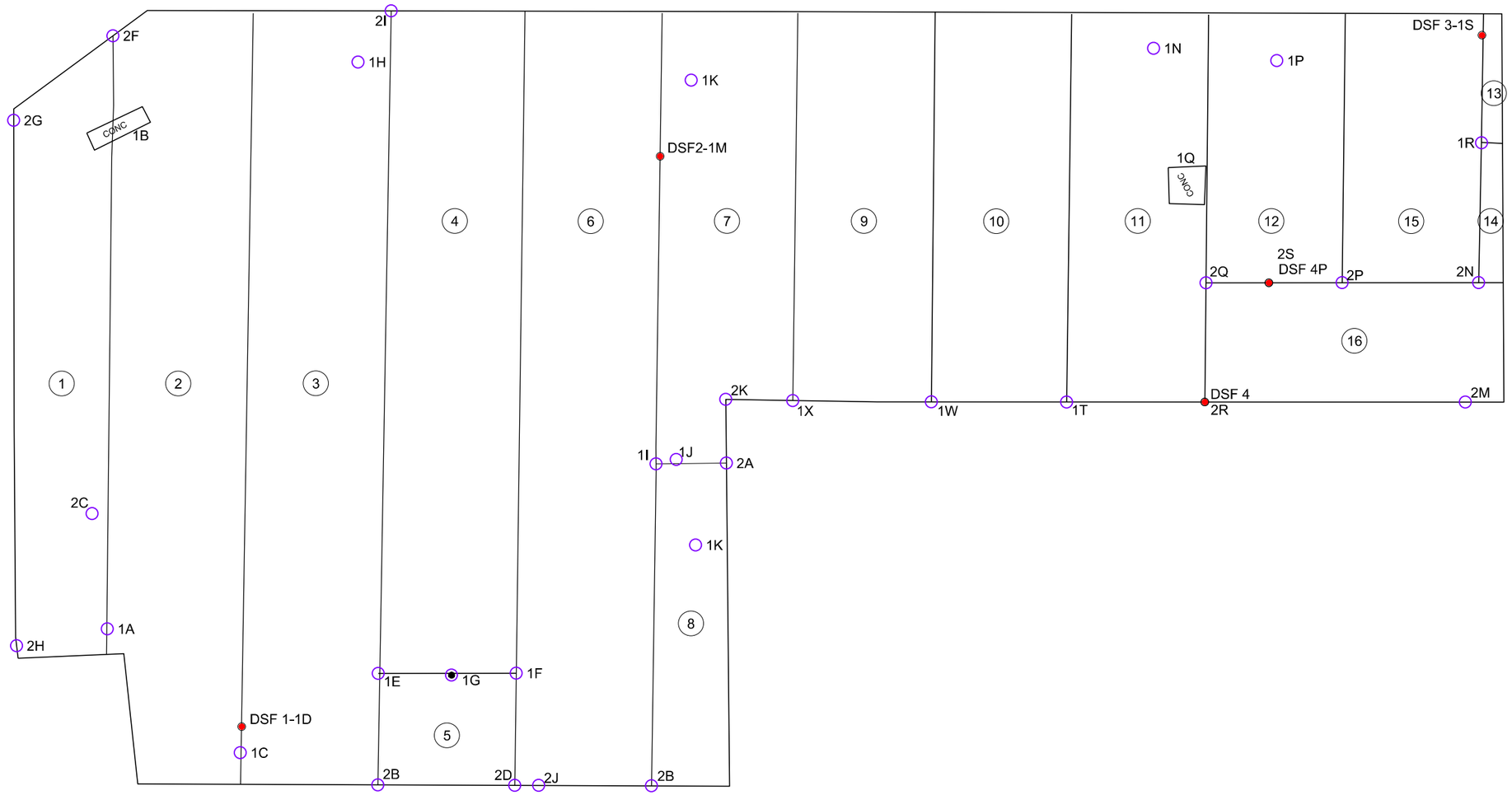

LEGEND

(5)	PANEL NUMBER
●	DESTRUCTIVE SAMPLE FUSION (DSF)
●	DESTRUCTIVE SAMPLE EXTRUSION (DSX)
○	DEFECT REPAIR

NOTES

1.) LOCATIONS OF SAMPLES AND DEFECTS ARE APPROXIMATE.

0 10 20 30
SCALE FEET

REV	DATE	REVISION DESCRIPTION	DES	CADD	CHK	RVW
△	-	-	-	-	-	-

PROJECT

PHARMACIA LLC / SOLUTIA INC.
OU-3 PCB SITE, ALABAMA

TITLE

AREA E
PANEL LAYOUT, DESTRUCTIVE TEST SAMPLE LOCATIONS, AND REPAIR LOCATIONS

Golder Associates

PROJECT No.		1302962CQA	FILE No.	1302962CQA4.2
DESIGN	SC	06/07/17	SCALE	AS SHOWN
CADD	SEP	06/07/17	FIGURE	
CHECK	ARF	06/07/17		4.2
REVIEW	SJM	12/22/17		

G:\$Archive H\943880 - Solutia\OU-3 RA Construction\AsBuiltPanel Layouts\1302962CQA4.2.dwg | Layout: ANSI_B_FIGURE_LANDSCAPE | Modified: SPiechota 06/07/2017 4:46 PM | Plotted: SPiechota 06/08/2017

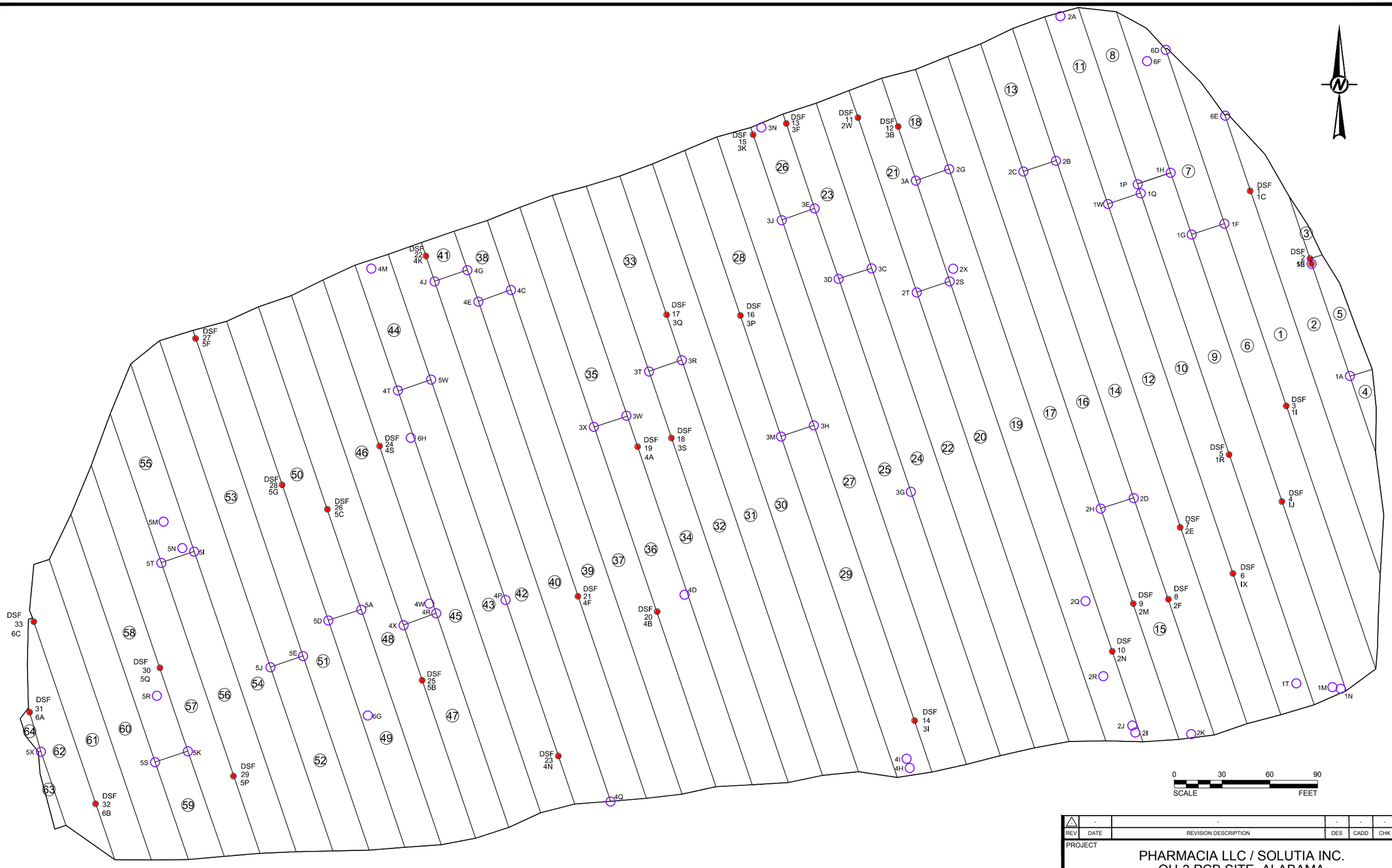

LEGEND

59	PANEL NUMBER
	DESTRUCTIVE SAMPLE FUSION (DSF)
	DESTRUCTIVE SAMPLE EXTRUSION (DSX)
	DEFECT REPAIR

NOTES

1. LOCATIONS OF SAMPLES AND DEFECTS ARE APPROXIMATE.

REV	DATE	REVISION DESCRIPTION	DES	CADD	CHK	RVW
-	-	-	-	-	-	-

PROJECT

PHARMACIA LLC / SOLUTIA INC.
OU-3 PCB SITE, ALABAMA

TITLE

PCB CELLS
PANEL LAYOUT, DESTRUCTIVE TEST SAMPLE LOCATIONS, AND REPAIR LOCATIONS

Golder Associates

PROJECT No.		1302962CQA	FILE No.	1302962CQA4.3
DESIGN	SC	06/07/17	SCALE	AS SHOWN
CADD	SEP	06/07/17	FIGURE	
CHECK	ARF	06/07/17		4.3
REVIEW	SJM	12/22/17		

G:\$Archive H\9433680 - Solutia\OU-3 RA Construction\AsBuilt\Panel Layouts\1302962CQA4.3.dwg | Layout: ANSI_B_FIGURE_LANDSCAPE | Modified: SPiechota 06/07/2017 4:45 PM | Plotted: SPiechota 06/08/2017

APPENDICES

APPENDIX A

PRE-FINAL CONSTRUCTION INSPECTION AND PRECONSTRUCTION CONFERENCE NOTES

APPENDIX A1

Pre-Final Construction Inspection Report

May 4, 2017

SENT VIA FEDERAL EXPRESS

Ms. Pamela Langston Scully
USEPA Region 4
Atlanta Federal Center
61 Forsyth St., SW
Atlanta, GA 30303

Re: Operable Unit-3 Prefinal Construction Inspection Report
Anniston PCB Site (docket No. 1:02-cv-0749-KOB)
Anniston, Alabama

Dear Ms. Langston Scully:

Pharmacia LLC (formerly Pharmacia Corporation) and Solutia Inc. ([Solutia], collectively, P/S) have substantially completed Remedial Action (RA) construction activities in accordance with the Interim Record of Decision (IROD) for Operable Unit-3 (OU-3), dated September 29, 2011, and the Statement of Work (SOW) attached to the Consent Decree (CD) (Docket No. 1:02-cv-0749-KOB).

This Prefinal Construction Inspection Report documents the Prefinal Inspection, which comprised a walk-through inspection of OU-3 from 1:30 to 3:30 pm on February 14, 2017.

The following people participated in the inspection:

• Pamela Langston Scully, EPA	EPA Oversight
• Timothy Turner, Versar, Inc.	EPA Oversight Contractor
• Michael Price, Genesis Project Inc.	RA Supervising Contractor
• Joshua Threadgill, Genesis Project Inc.	Assistant Construction Manager
• John Loper, The Loper Group Inc.	Remedial Design Supervising Contractor
• Steven Moeller, Golder Associates Inc.	Certifying Engineer
• Andrew Fuggle, Golder Associates Inc.	Design Engineer

The areas and main construction features that were inspected are identified below:

- Area A (multi-layer cover system and concrete cover);
- Areas C and D (geocell-reinforced dense graded aggregate cover);
- Area E (multi-layer cover system, retaining wall, and concrete cover);
- Area H (concrete cover and fencing);
- South Landfill PCB Cells (RCRA Subtitle-C compliant cap and fencing);

- Autoclave Unit Area (concrete cover);
- Perimeter fencing north of Area A;
- Carbon Treatment System #1 (near OW-21A); and
- Carbon Treatment System #2 (near OW-10).

The only outstanding construction item noted during the inspection was a few shallow ruts in the soil cover in the northeast corner of Area A as a result of vehicular movement immediately following a period of rainfall. The required actions to resolve this item include smoothing and re-compaction of the rutted areas, and reseeding the affected area. This work was completed on April 21, 2017.

An anticipated date for the Final Inspection cannot be set at this time as two aspects of the RA construction activities are not yet complete. One relates to the seep area at the South Landfill, and is expected to be completed by the end of October 2017. The other relates to determining the ultimate discharge location for treated groundwater from the new pump and treat system located on the Northside Properties (adjacent to well OW-21A). This determination will be made following completion of discussions with the Anniston Water Works and Sewer Board, which are ongoing.

P/S will notify EPA when the final items have been addressed so that the Final Inspection can be scheduled.

Please do not hesitate to contact me at 256-231-8404 if you have any questions or need additional information in this regard.

Sincerely,

E. Gayle Macolly Harris
Manager, Remedial Projects

cc: Mr. Chip Crockett (ADEM)
Mr. G. Douglas Jones, Esq.
Mr. Thomas Dahl
Mr. John Loper (Loper Group)
Mr. Michael Price (Genesis Project, Inc.)
Ms. Cynthia Calix
Mr. Rick Keenan (Golder Associates Inc.)

APPENDIX A2

Preconstruction Conference Notes

MEETING MINUTES

Subject:	OPERABLE UNIT 3 (OU-3) REMEDIAL ACTION (RA) MINUTES OF PRE-CONSTRUCTION CONFERENCE		
Owner:	PHARMACIA LLC/SOLUTIA INC.		
Project:	ANNISTON PCB SITE, OU-3 RA	**Project No:**	1302962.RDA
Meeting Date: 08 JUNE 2015		**Meeting Location**:	SOLUTIA INC. PLANT SITE ANNISTON, ALABAMA
Attendees: **(See Attachment A for sign-in sheet)**	Ms. Pam Scully – United States Environmental Protection Agency (US EPA) Ms. Stephanie Y. Brown – US EPA Ms. Gayle Macolly – Eastman Mr. Johnnie Pearson – Eastman Mr. Michael Price – Genesis Projects Inc. Mr. Josh Threadgill – Genesis Projects Inc. Mr. John Loper - The Loper Group, Inc. Mr. Thomas Loper – The Loper Group, Inc. Mr. Donn Williams – Williams Service Mr. Steve Moeller - Golder Associates Inc. Mr. Patrick Callahan - Golder Associates Inc. Mr. Shawn Casey - Golder Associates Inc. Mr. Austin Pierce – Alabama Department of Environmental Management (ADEM) Mr. Metz Duites - ADEM Mr. Terence Chuhay – J.M. Waller / Versar Mr. Tim Turner – J.M. Waller / Versar Mr. Randy Goodwin – Taylor Corporation Mr. Jason Joiner – Taylor Corporation		
Notes by:	Mr. Patrick Callahan – Golder Associates Inc.		

Golder Associates Inc.
3730 Chamblee Tucker Road
Atlanta, GA 30341 USA
Tel: (770) 496-1893 Fax: (770) 934-9476 www.golder.com

Golder Associates: Operations in Africa, Asia, Australasia, Europe, North America and South America

Golder, Golder Associates and the GA globe design are trademarks of Golder Associates Corporation

The meeting was opened at the Solutia Inc. (Solutia), Anniston, Alabama Plant Site at 3:30pm CST on Monday, June 8, 2015.

1.0 INTRODUCTIONS (ROLES AND RESPONSIBILITIES)

The meeting began with an introduction of the parties present. Attendees introduced themselves and summarized their role in the RA project:

- Ms. Pam Scully will serve as EPA oversight; with members of J.M. Waller contracted to serve as EPA's on-site representatives during the project.
- Solutia's remediation project team will consist of Ms. Gayle Macolly (Remedial Project Manager), Mr. Mike Price (RA Supervising Contractor), Mr. Donn Williams (RA Construction Manager), Mr. Josh Threadgill (Assistant Construction Manager), and Mr. John Loper and Mr. Thomas Loper (Remedial Design team).
- Golder Associates Inc. (Golder) will serve as Construction Quality Assurance (CQA) consultant, with Mr. Steve Moeller functioning as the Certifying Engineer. Golder will act as the Contractor for groundwater portion of the RA.
- Taylor Corporation has been awarded the contract for the cover systems portion of the RA.
- Representatives from ADEM will monitor construction activity on behalf of the State.

2.0 JOB SITE COMMUNICATIONS AND AUTHORITY

All personnel working on site have "stop work" authority. If any work activity is seen as unsafe, work should be stopped until the issue is corrected.

The Construction Manager (Mr. Donn Williams) will be the direct line of contact between the Owner, oversight personnel, and the Contractor. It is very important to follow these lines of communication throughout construction to avoid misinterpretations and to promote safety.

Any changes to the scope of work must be reviewed by the Remedial Design Engineer and approved by the Supervising Contractor and Construction Manager. EPA should be notified of any changes in scope prior to implementing the changes. The Supervising Contractor will be responsible for communicating with the EPA and notifying EPA of any proposed changes. One version of the edited "redline" construction drawings will be maintained at the site by the Construction Manager.

Weekly progress meetings will be held on Wednesdays; a "look-ahead" estimate will be provided as part of the meetings. Managers will meet on a monthly basis, and P/S will include a summary of construction activities within the monthly status report to the EPA.

3.0 HEALTH & SAFETY AND SECURITY

Mr. Donn Williams stated that daily health and safety tailgate meetings will be held each morning with all on-site personnel present. Attendees were reminded of the Plant's health and safety procedures:

- Contractor is responsible for submitting site-specific Health and Safety and Contingency Plan (HSCP), which will include dust monitoring and spill response procedures;
- Contractor is responsible for Traffic Management Plan;
- Contractor is responsible for hiring an off-duty police officer for traffic management during periods when construction vehicles cross Alabama Highway 202;
- On-site personnel, who may be exposed to hazards, must be OSHA 40-hour HAZWOPER certified as stated in the Contract Documents;
- All on-site personnel must complete the Plant's site-specific training video;
- Hard hats and long-sleeve shirts are required, at a minimum;
- Lighters are not allowed within the Plant site; and

- Contractors must comply with site-specific policies (i.e. excavation permit and hot work permit).

Attendees were reminded of the Plant's security procedures:

- The Plant site and work areas must be secured and fenced at all times. If removal of fencing is required for construction, it must be replaced by the end of the shift;
- A site security guard is required to monitor construction entrances, exits, and gates;
- Contractors must sign in and sign out daily. Only authorized personnel and vehicles are allowed on-site;
- Construction vehicles will require a daily inspection/approval;
- Daily parking for construction personnel is available in the Plant parking lot only (north end of parking lot);
- All on-site personnel must sign and comply with the contractor background check policy;
- No pictures are allowed unless authorized by the Owner. Site-specific cameras will be made available at the Site for oversight personnel to take pictures. Pictures must be approved by the Plant site personnel prior to use;
- Cell phone use is not allowed within the Plant site; and
- A Solutia representative indicated that the EPA and ADEM were exempt from the plant background check policy.

4.0 DESCRIPTION OF WORK AREAS

Mr. Steve Moeller gave an overview of the RA work areas with reference to the construction drawings and the types of covers in each area:

- Area A (HDPE geomembrane and soil cover, limited areas of concrete);
- Areas C and D (DGA cover);
- Area E (HDPE geomembrane and soil cover, and concrete retaining wall);
- Autoclave Unit Area (Concrete cover);
- PCB Cells (HDPE geomembrane and soil cover);
- Coldwater Mountain Borrow Area; and,
  - Contractor was reminded that shaker screen should be set to 1-inch size.
- Groundwater Recovery and Treatment System.

The descriptions provided were consistent with the Contract Documents for the project. Refer to the RA Work Plan, construction drawings, and the technical specifications for further details.

5.0 CONSTRUCTION SCHEDULE

A discussion of construction schedule included the following:

- Notice to Proceed (NTP) is tentatively scheduled for June 15, 2015;
- Approved working hours are set from 6:30am – 6:30pm. Work hours may be adjusted according to weather and season as approved by the Construction Manager;
- Erosion Control and fencing should be implemented prior to starting work in any area:
  - Daily inspections consistent with the Construction Best Management Plan (CBMPP) are required
  - Sediment bags are required anytime storm water is pumped from any construction area
- Autoclave (work required to be completed during the Plant "turn-around" period, currently scheduled from August 11-28); and
- Groundwater Systems:
  - Drilling and installation of the new interceptor wells is anticipated for the end of July;

- Installation of carbon treatment systems will begin in the middle of August, after the cap/cover for Area A has been initiated.

During this discussion, Mr. Moeller emphasized the importance of installing Best Management Practices (BMPs) prior to initiating intrusive work at the site and for maintaining BMPs throughout construction. Erosion will be monitored and the Contractor will be required to mitigate any erosion or sedimentation issues immediately.

6.0 SUBMITTALS/SHOP DRAWINGS

- Contractor's schedule is due 7 days following the NTP
- Contractor is responsible for submitting Submittal List including schedule requirements
- Progress payments are scheduled for the 15th of each month

7.0 PROJECT CLOSEOUT

- Pre-Final and Final Completion Inspections
- As-Built Drawings and Final Completion Report (one report will be issued for all of the RA work activities)

8.0 MEETING ADJOURNED

Meeting was adjourned at 5:00pm CST

APPENDIX B

CONSTRUCTION RECORD DRAWINGS

CONSTRUCTION RECORD DRAWINGS

PHARMACIA LLC / SOLUTIA INC.
OPERABLE UNIT 3 REMEDIAL ACTION
ANNISTON PCB SITE, ALABAMA



VICINITY MAP

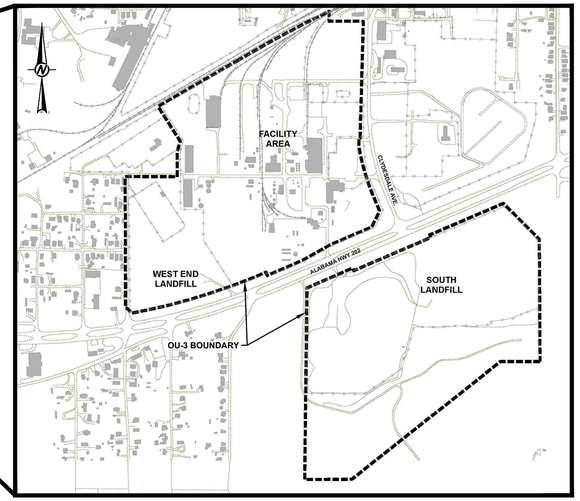

SITE LOCATION MAP

INDEX OF SHEETS

SHEET NUMBER	DESCRIPTION
01	TITLE SHEET
02	REMEDIAL AREAS EXISTING CONDITIONS
03	AREA A AND AREA E EXISTING CONDITIONS
04	AREAS C & D AND AUTOCLAVE UNIT EXISTING CONDITIONS
05	PCB CELLS EXISTING CONDITIONS
06	AREA A AND AREA E FINAL CONDITIONS
06A	AREA E FINAL CONDITIONS AND PLAN VIEW OF AREA E WALL
06B	AREA E WALL ALIGNMENT
06C	AREA E WALL ALIGNMENT ADJACENT TO CONTROL BUILDING
07	AREAS C & D AND AUTOCLAVE UNIT FINAL CONDITIONS
08	PCB CELLS FINAL CONDITIONS
09	CROSS SECTIONS
10	TYPICAL COVER DETAILS
11	MISCELLANEOUS DETAILS (1 OF 2)
12	MISCELLANEOUS DETAILS (2 OF 2)
13	NEW FENCE LOCATION
14	IW-28 AND IW-29 LOCATION PLAN (AREA A)
15	IW-27 AND IW-28 LOCATION PLAN (NORTHSIDE PROPERTIES)
16	INTERCEPTOR WELL DETAIL AND PROCESS & INSTRUMENTATION DIAGRAM
17	CARBON TREATMENT SYSTEM
18	CARBON TREATMENT SYSTEMS PROCESS & INSTRUMENTATION DIAGRAM
19	GROUNDWATER EXTRACTION SYSTEMS PROCESS FLOW DIAGRAM

ALABAMA LICENSED No. 34745 PROFESSIONAL ENGINEER STEVEN J. MOELLER

OWNER
SOLUTIA INC.
702 CLYDESDALE AVE
ANNISTON, AL 36201

DRAWINGS PREPARED BY
GOLDER ASSOCIATES INC.
3730 CHAMBLEE TUCKER RD
ATLANTA, GA 30341
770-496-1893

DESIGN ENGINEER
GOLDER ASSOCIATES INC.
STEVEN J. MOELLER, P.E.
ALABAMA P.E.
REGISTRATION NO. 34745

THESE RECORD DRAWINGS HAVE BEEN PREPARED BASED UPON INFORMATION FROM VARIOUS SOURCES. THESE SOURCES HAVE BEEN REFERENCED ON THE APPROPRIATE DRAWINGS.

12/22/2017

SHEET
01

G:\Archive H\9433680 - Solutia\OU-3 RA Construction\AsBuilt\Record Drawings\1302962CQA-001-RD-Title Sheet.dwg | Layout: 01 TITLE SHEET | Modified: amorales 12/18/2017 3:11 PM | Plotted: amorales 12/20/2017

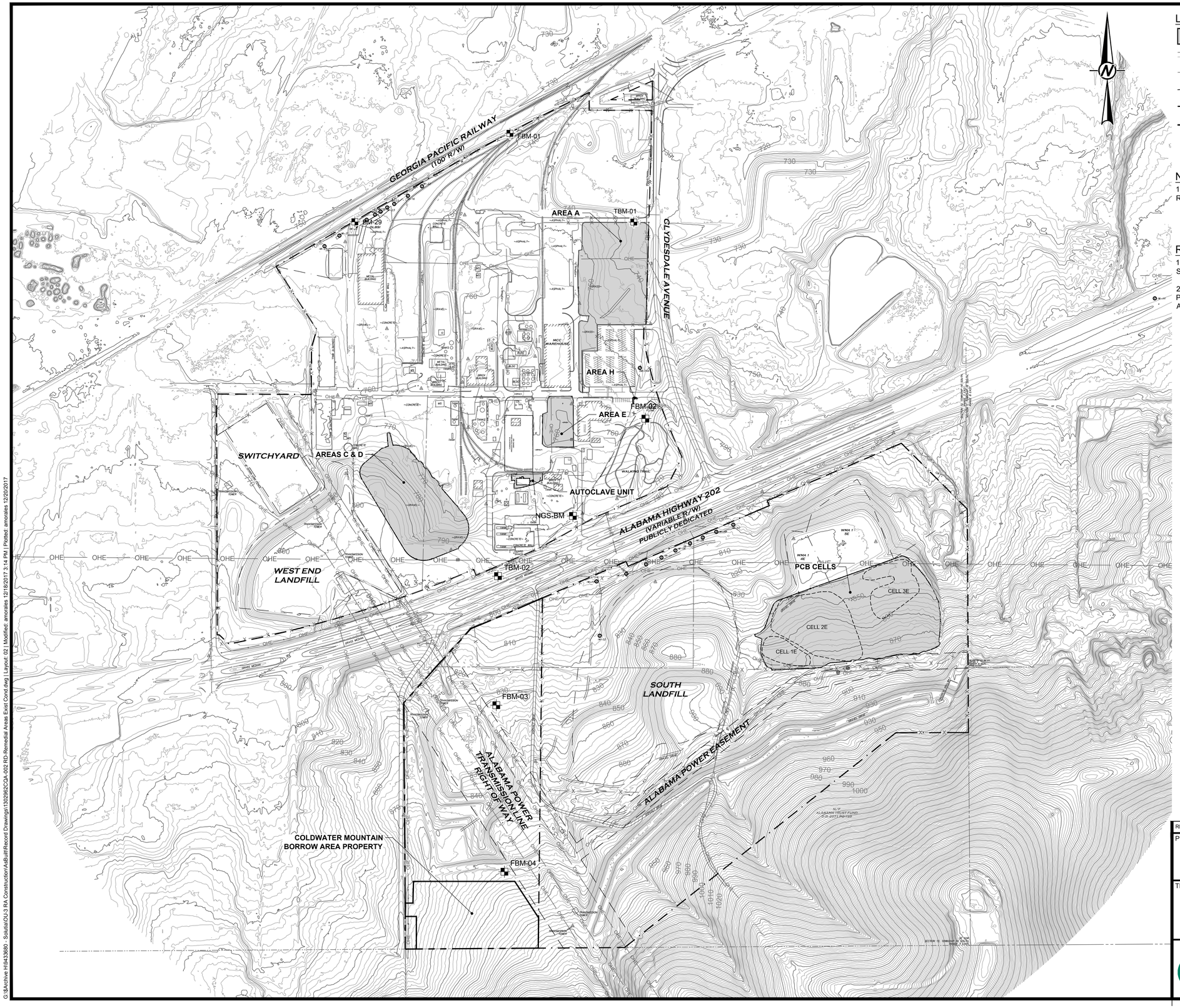

LEGEND

- LIMITS OF PROPOSED COVER SYSTEMS
- EXISTING CONTOURS (2 FT. INTERVAL)
- EXISTING FENCE
- PCB CELL BOUNDARY
- SURVEYED BOUNDARY FOR OU-3
- PHARMACIA LLC / SOLUTIA INC. PROPERTY BOUNDARY
- BENCHMARK

NOTES

1. THE EXISTING CONDITIONS REPRESENT SITE CONDITIONS PRIOR TO IMPLEMENTING THE REMEDIAL ACTION.

REFERENCES

1. TOPOGRAPHY FROM CALHOUN COUNTY (2012) AND LOWERY & ASSOCIATES LAND SURVEYING, LLC; DATED APRIL 17, 2013.

2. "ALTA / ACSM LAND TITLE SURVEY OF: OPERABLE UNIT 3 OF THE ANNISTON PCB SITE; PREPARED FOR: SOLUTIA INC." BY LOWERY & ASSOCIATES LAND SURVEYING, LLC; DATED APRIL 17, 2013.

BENCHMARKS

NAME	EASTING	NORTHING	ELEVATION
TBM-01	650261.14	1147234.95	735.92
TBM-02	649614.26	1145563.42	792.99
BM-29	648936.95	1147235.77	747.74
NGS-BM	649972.19	1145839.22	778.94
FBM-01	649673.39	1147656.33	739.95
FBM-02	650316.73	1146301.37	757.69
FBM-03	649608.59	1144940.43	831.82
FBM-04	649646.50	1144149.91	899.78

BM-29 / FBM / TBM FACILITY BENCHMARKS
NGS-BM EXISTING NGS MONUMENT

ALABAMA LICENSED No. 34145 PROFESSIONAL ENGINEER STEVEN J. MOELLER

12/22/2017

THESE RECORD DRAWINGS HAVE BEEN PREPARED BASED UPON INFORMATION FROM VARIOUS SOURCES. THESE SOURCES HAVE BEEN REFERENCED ON THE APPROPRIATE DRAWINGS.

0 225 550 775
SCALE FEET

REV	DATE	REVISION DESCRIPTION	DES	CADD	CHK	RVW

PROJECT
PHARMACIA LLC / SOLUTIA INC.
OPERABLE UNIT 3 REMEDIAL ACTION
ANNISTON PCB SITE, ALABAMA

TITLE
REMEDIAL AREAS
EXISTING CONDITIONS

Golder Associates | Solutia

PROJECT No. 1302962CQA.03 | FILE No. 1302962CQA-002 RD-Remedial Areas Exist Cond
SCALE AS SHOWN
SHEET 02

G:\$Archive H\9433680 - Solutia\OU-3 RA Construction\AsBuiltRecord Drawings\1302962CQA-002 RD-Remedial Areas Exist Cond.dwg | Layout: 02 | Modified: amorales 12/18/2017 3:14 PM | Plotted: amorales 12/20/2017

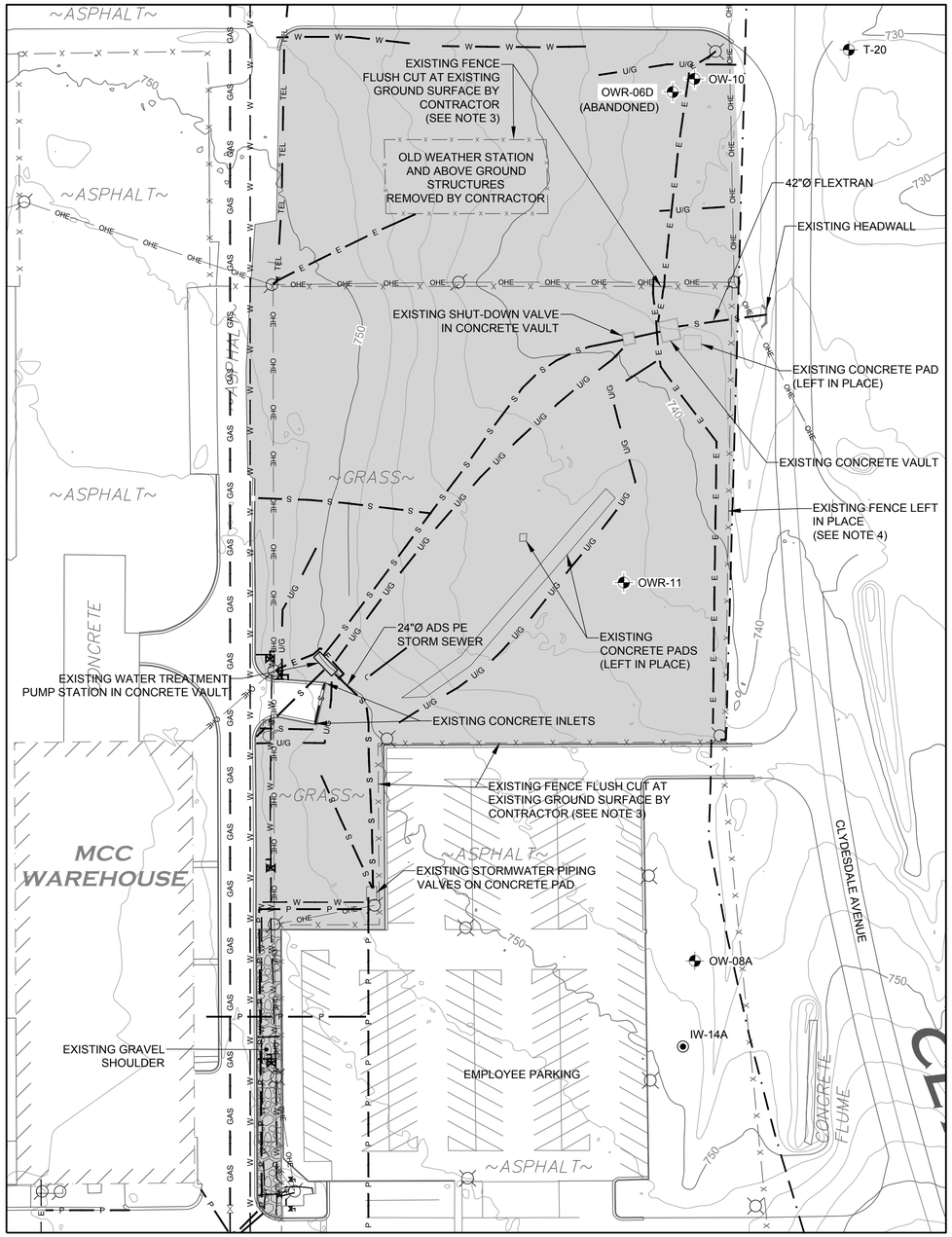

AREA A
EXISTING CONDITIONS

0 50 100 150
SCALE FEET

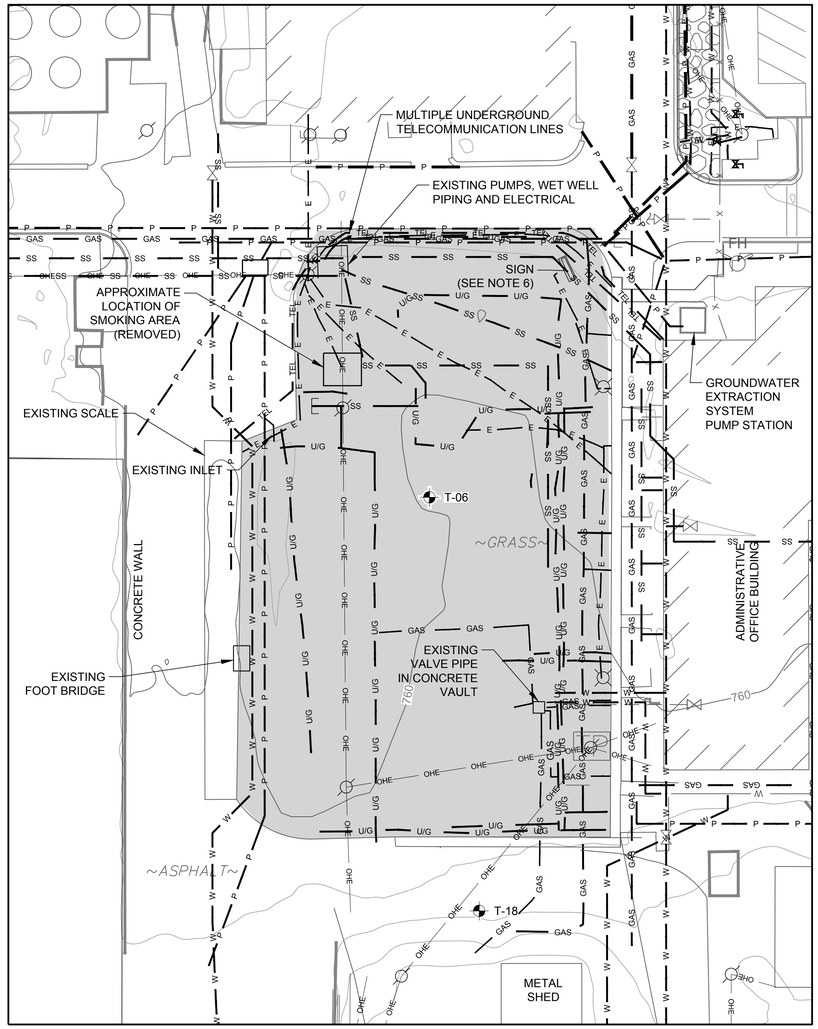

AREA E
EXISTING CONDITIONS

0 30 60 90
SCALE FEET

LEGEND

- LIMITS OF COVER SYSTEMS
- SURVEYED BOUNDARY FOR OU-3
- EXISTING CONTOURS (2 FT. INTERVAL)
- FENCE
- CURB
- RAILROAD
- WALL
- EXISTING GRAVEL
- MONITORING WELL
- INTERCEPTOR WELL
- LIGHT AND POWER POLES
- FIRE HYDRANT
- STORM SEWER
- SANITARY SEWER
- ELECTRICAL LINE
- WATER LINE
- TELEPHONE LINE
- NATURAL GAS LINE
- OVERHEAD ELECTRICAL LINE
- UNSPECIFIED UNDERGROUND UTILITY
- PROCESS SEWER
- ABOVE-GROUND WATER VALVE

REFERENCES

1. UTILITY LINES WERE LOCATED BY EGSCI CONSULTING INC. THROUGH SURFACE GEOPHYSICAL (GROUND PENETRATING RADAR AND INDUCTION) METHODS IN APRIL 2013 OR ARE BASED ON HISTORIC PLANT RECORDS AND SHOULD BE CONSIDERED APPROXIMATE LOCATIONS. LOCATIONS OF UTILITY MARKINGS FROM GEOPHYSICAL WORK WERE SURVEYED BY TAYLOR LAND SURVEYING IN APRIL AND MAY 2013.

2. THE IDENTIFICATION OF THE PURPOSE / TYPE / SIZE OF THE UNDERGROUND UTILITIES SHOWN WAS OBTAINED FROM THE DRAWING ENTITLED "STUMP.dwg" PROVIDED BY SOLUTIA INC.

3. TOPOGRAPHY FROM CALHOUN COUNTY (2012) AND LOWERY & ASSOCIATES LAND SURVEYING, LLC; DATED APRIL 17, 2013.

4. BASE DRAWING IS "ALTA / ACSM LAND TITLE SURVEY OF: OPERABLE UNIT 3 OF THE ANNISTON PCB SITE; PREPARED FOR: SOLUTIA INC." BY LOWERY & ASSOCIATES LAND SURVEYING, LLC; DATED APRIL 17, 2013.

ALABAMA LICENSED No. 34145 PROFESSIONAL ENGINEER STEVEN J. MOELLER

12/22/2017

NOTES

1. EXISTING STRUCTURES AND UTILITIES WERE LEFT IN PLACE UNLESS INDICATED OTHERWISE.

2. UTILITIES OUTSIDE OF SHADED AREAS ARE NOT FULLY DISPLAYED.

3. SEE SHEET 13 FOR EXTENT OF FENCING REMOVED AND REPLACED IN AREA A.

4. EXISTING FENCE POSTS WERE LEFT IN PLACE. FENCE FABRIC WAS REMOVED AS NECESSARY TO FACILITATE CONSTRUCTION BUT WAS REPLACED AT THE END OF CONSTRUCTION.

5. INFRASTRUCTURE AND UTILITIES ADDED OR MODIFIED AFTER APRIL 2013 ALTA LAND SURVEY AND UTILITY LOCATE EFFORTS ARE NOT FULLY CAPTURED (REFER TO FACILITY STUMP DRAWING).

6. BASE OF EXISTING SIGN WAS RAISED BY CONTRACTOR TO ACCOMMODATE RA COVER SYSTEM.

7. THE EXISTING CONDITIONS REPRESENT SITE CONDITIONS PRIOR TO IMPLEMENTING THE REMEDIAL ACTION.

THESE RECORD DRAWINGS HAVE BEEN PREPARED BASED UPON INFORMATION FROM VARIOUS SOURCES. THESE SOURCES HAVE BEEN REFERENCED ON THE APPROPRIATE DRAWINGS.

REV	DATE	REVISION DESCRIPTION	DES	CADD	CHK	RVW

PROJECT
PHARMACIA LLC / SOLUTIA INC.
OPERABLE UNIT 3 REMEDIAL ACTION
ANNISTON PCB SITE, ALABAMA

TITLE
AREA A AND AREA E EXISTING CONDITIONS

Golder Associates | Solutia

PROJECT No. 1302962CQA.03
FILE No. 1302962CQA-003 RD-AREAS A & E Existing Conditions
SCALE AS SHOWN
SHEET 03

G:\$Archive H\943680 - Solutia\OU-3 RA Constuction\AsBuilt\Record Drawings\1302962CQA-003 RD-AREAS A & E Existing Conditions.dwg | Layout: 03 | Modified: amorales 12/18/2017 3:21 PM | Plotted: amorales 12/20/2017

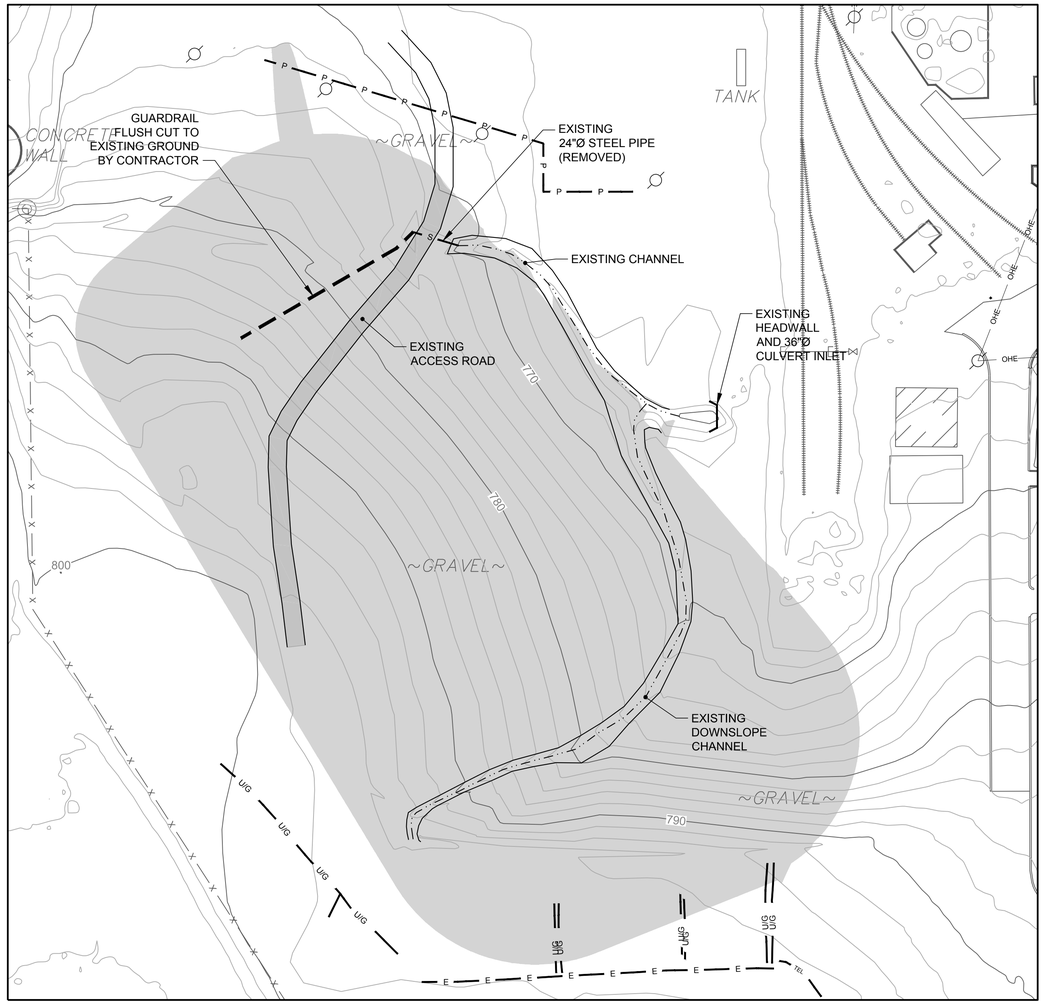

AREAS C AND D EXISTING CONDITIONS

SCALE 0 50 100 150 FEET

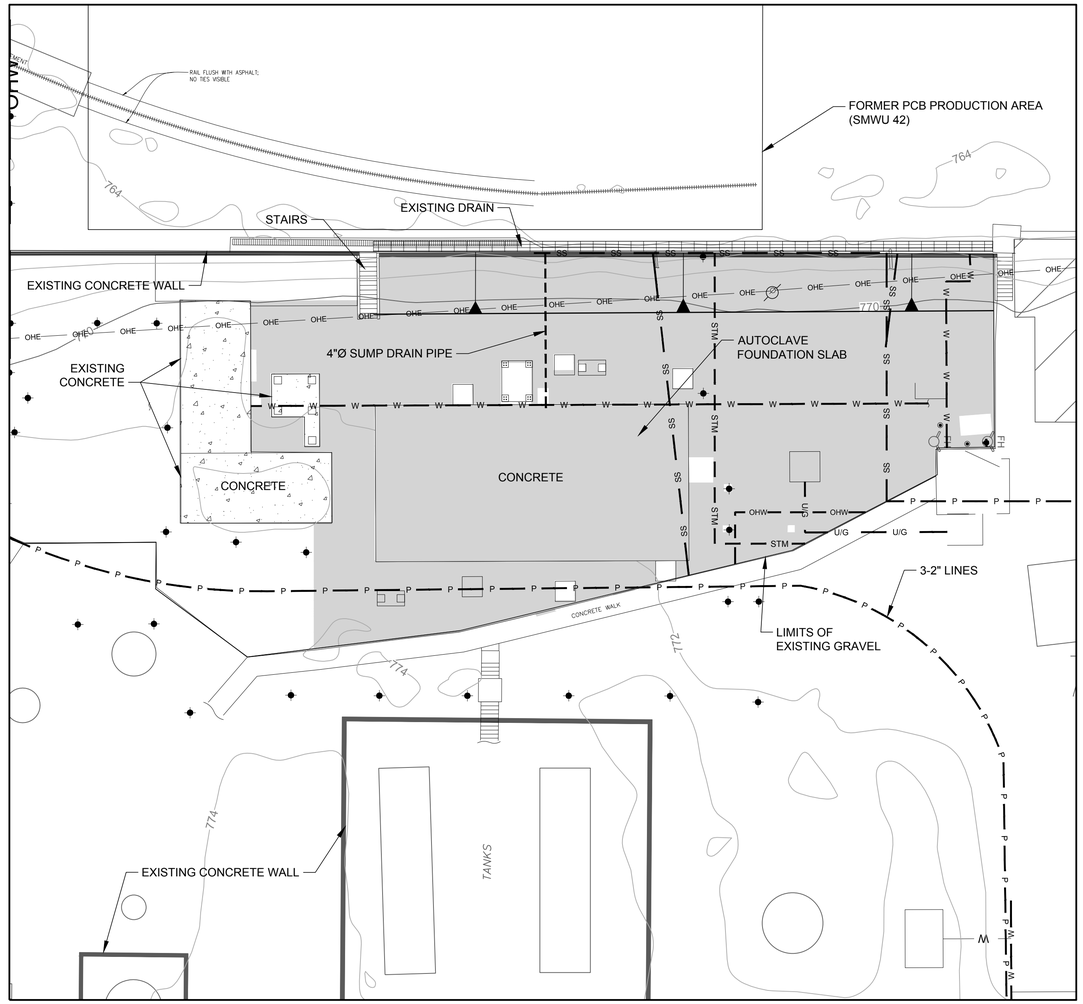

AUTOCLAVE UNIT EXISTING CONDITIONS

SCALE 0 15 30 45 FEET

LEGEND

- LIMITS OF COVER SYSTEMS
- EXISTING CONTOURS (2 FT. INTERVAL)
- FENCE
- CURB
- RAILROAD
- WALL
- GUARDRAIL
- LIGHT AND POWER POLES
- FIRE HYDRANT
- CENTER OF COLUMN
- WATER LINE
- OVERHEAD WATER LINE
- SANITARY SEWER
- STEAM LINE
- UNSPECIFIED UNDERGROUND UTILITY
- STORM SEWER
- ELECTRICAL LINE
- OVERHEAD ELECTRICAL LINE
- PROCESS SEWER

NOTES

1. EXISTING STRUCTURES AND UTILITIES WERE LEFT IN PLACE UNLESS INDICATED OTHERWISE.
2. UTILITIES OUTSIDE OF SHADED AREAS ARE NOT FULLY DISPLAYED.
3. INFRASTRUCTURE AND UTILITIES ADDED OR MODIFIED AFTER APRIL 2013 ALTA LAND SURVEY AND UTILITY LOCATE EFFORTS ARE NOT FULLY CAPTURED (REFER TO FACILITY STUMP DRAWING).
4. THE EXISTING CONDITIONS REPRESENT SITE CONDITIONS PRIOR TO IMPLEMENTING THE REMEDIAL ACTION.

REFERENCES

1. UTILITY LINES WERE LOCATED BY EGSCI CONSULTING INC. THROUGH SURFACE GEOPHYSICAL (GROUND PENETRATING RADAR AND INDUCTION) METHODS IN APRIL 2013 OR ARE BASED ON HISTORIC PLANT RECORDS AND SHOULD BE CONSIDERED APPROXIMATE LOCATIONS. LOCATIONS OF UTILITY MARKINGS FROM GEOPHYSICAL WORK WERE SURVEYED BY TAYLOR LAND SURVEYING IN APRIL AND MAY 2013.
2. THE IDENTIFICATION OF THE PURPOSE / TYPE / SIZE OF THE UNDERGROUND UTILITIES SHOWN WAS OBTAINED FROM THE DRAWING ENTITLED "STUMP.dwg" PROVIDED BY SOLUTIA INC.
3. TOPOGRAPHY FROM CALHOUN COUNTY (2012) AND LOWERY & ASSOCIATES LAND SURVEYING, LLC; DATED APRIL 17, 2013.
4. BASE DRAWING IS "ALTA / ACSM LAND TITLE SURVEY OF: OPERABLE UNIT 3 OF THE ANNISTON PCB SITE; PREPARED FOR: SOLUTIA INC." BY LOWERY & ASSOCIATES LAND SURVEYING, LLC; DATED APRIL 17, 2013.
5. AUTOCALAVE LAYOUT TAKEN FROM DWG. NO. T7235C04 FROM HARGROVE ENGINEERS + CONSTRUCTORS TITLED "AUTOCLAVE PROJECT, PAVING, GRADING, AND DRAINAGE PLAN", DATED 9/17/2013.

ALABAMA LICENSED No. 31745 PROFESSIONAL ENGINEER STEVEN J. MOELLER

12/22/2017

THESE RECORD DRAWINGS HAVE BEEN PREPARED BASED UPON INFORMATION FROM VARIOUS SOURCES. THESE SOURCES HAVE BEEN REFERENCED ON THE APPROPRIATE DRAWINGS.

REV	DATE	REVISION DESCRIPTION	DES	CADD	CHK	RVW

PROJECT
PHARMACIA LLC / SOLUTIA INC.
OPERABLE UNIT 3 REMEDIAL ACTION
ANNISTON PCB SITE, ALABAMA

TITLE
AREAS C & D AND AUTOCLAVE UNIT EXISTING CONDITIONS

Golder Associates | Solutia

PROJECT No. 1302962CQA.03 | FILE No. 1302962CQA-004 RD-AREAS C-D & Autoclave Existing Conditions
SCALE AS SHOWN
SHEET 04

G:\$Archive H19433680 - Solutia\OU-3 RA Construction\AsBuilt\Record Drawings\1302962CQA-004 RD-AREAS C-D & Autoclave Existing Conitions.dwg | Layout: 04 | Modified: amorales 12/18/2017 3:19 PM | Plotted: amorales 12/20/2017

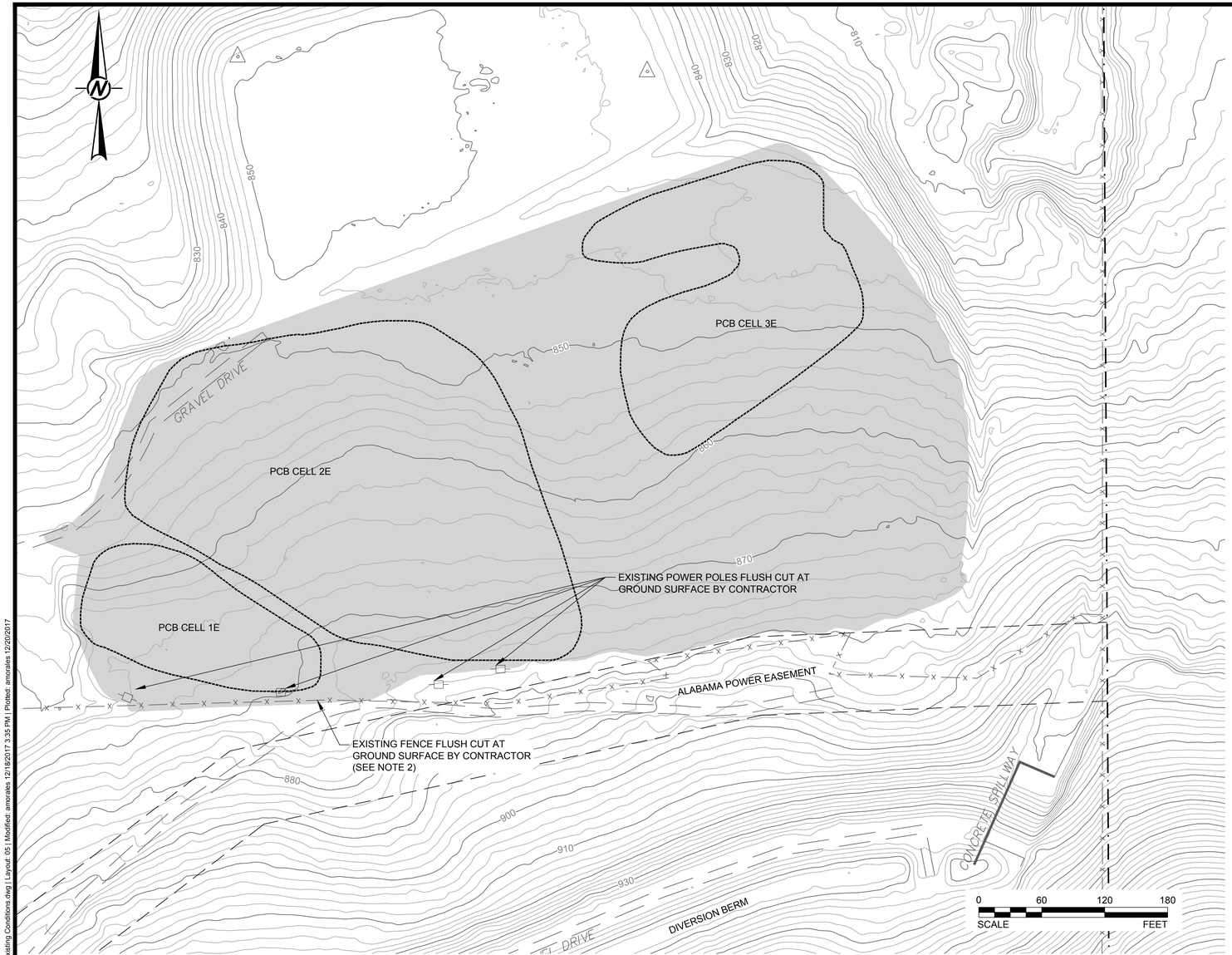

LEGEND

- LIMITS OF COVER SYSTEMS
- EXISTING CONTOURS (2 FT. INTERVAL)
- FENCE
- FORMER PCB CELL BOUNDARIES
- SURVEYED BOUNDARY FOR OU-3
- ALABAMA POWER EASEMENT
- EXISTING POWER POLES (REMOVED)

NOTES

1. THE EXISTING CONDITIONS REPRESENT SITE CONDITIONS PRIOR TO IMPLEMENTING THE REMEDIAL ACTION.

2. FENCING AND POWER POLES WERE REMOVED AS NECESSARY TO CONSTRUCT COVER SYSTEM FOR THE PCB CELLS. FENCE WAS REPLACED ONCE COVER SYSTEM WAS COMPLETED.

REFERENCES

1. TOPOGRAPHY FROM CALHOUN COUNTY (2012) AND LOWERY & ASSOCIATES LAND SURVEYING, LLC; DATED APRIL 17, 2013.

2. "ALTA / ACSM LAND TITLE SURVEY OF: OPERABLE UNIT 3 OF THE ANNISTON PCB SITE; PREPARED FOR: SOLUTIA INC." BY LOWERY & ASSOCIATES LAND SURVEYING, LLC; DATED APRIL 17, 2013.

12/22/2017

THESE RECORD DRAWINGS HAVE BEEN PREPARED BASED UPON INFORMATION FROM VARIOUS SOURCES. THESE SOURCES HAVE BEEN REFERENCED ON THE APPROPRIATE DRAWINGS.

ALABAMA LICENSED No. 34745 PROFESSIONAL ENGINEER STEVEN J. MOELLER

REV	DATE	REVISION DESCRIPTION	DES	CADD	CHK	RVW

PROJECT

PHARMACIA LLC / SOLUTIA INC.
OPERABLE UNIT 3 REMEDIAL ACTION
ANNISTON PCB SITE, ALABAMA

TITLE

PCB CELLS
EXISTING CONDITIONS

Golder Associates

Solutia

PROJECT No. 1302962CQA.03

FILE No. 1302962CQA-005 RD-PCB CELLS Existing Conditions

SCALE AS SHOWN

SHEET 05

G:\$Archive H1943680 - Solutia\OU-3 RA Construction\AsBuiltRecord Drawings\1302962CQA-005 RD-PCB CELLS Existing Conditions.dwg | Layout: 05 | Modified: amorales 12/18/2017 3:35 PM | Plotted: amorales 12/20/2017

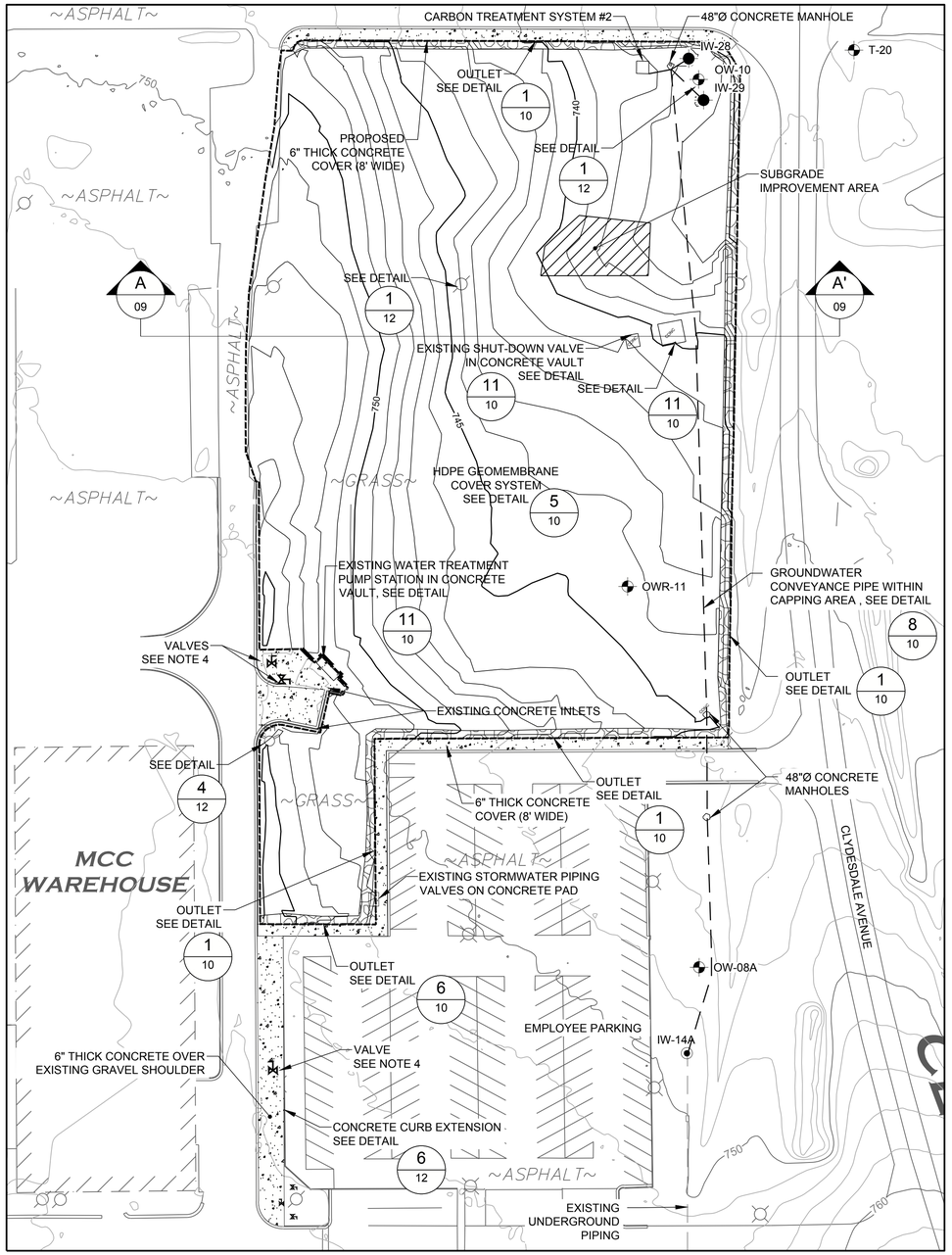

AREA A
FINAL CONDITIONS

0 50 100 150
SCALE FEET

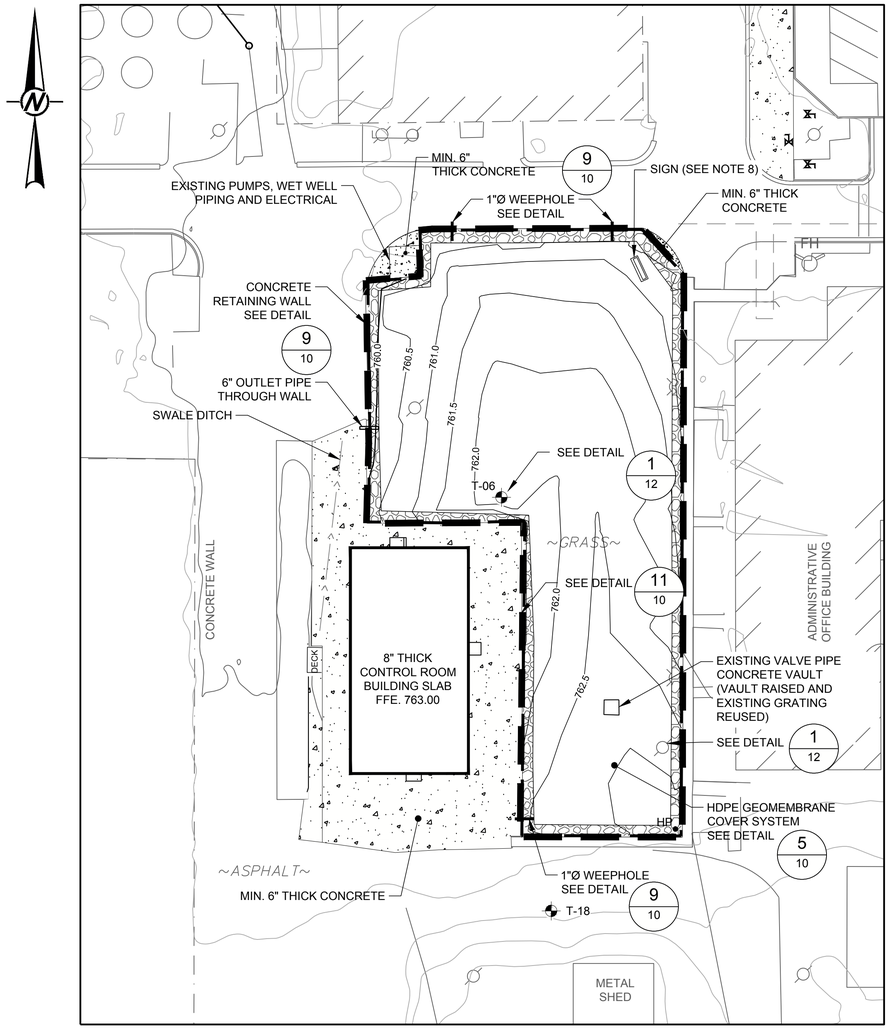

AREA E
FINAL CONDITIONS

0 30 60 90
SCALE FEET

LEGEND

- 760 — EXISTING CONTOURS (2 FT. INTERVAL) - OUTSIDE CAPPED AREAS
- 760 — AS-BUILT CONTOURS
- CURB
- RAILROAD
- EDGE OF GEOMEMBRANE LINER
- EXISTING MONITORING WELL (SEE NOTES 2 AND 4)
- EXISTING INTERCEPTOR WELL (SEE NOTE 2)
- NEW INTERCEPTOR WELL
- LIGHT AND POWER POLES (SEE NOTE 2)
- FH — FIRE HYDRANT (SEE NOTE 4)
- HP — HIGH POINT
- ABOVE-GROUND WATER VALVE
- CONCRETE WALL
- UNDERGROUND GROUNDWATER CONVEYANCE PIPE
- CONCRETE COVER
- NO. 57 STONE DRAINAGE SYSTEM
- RIP RAP OUTLET
- SUBGRADE IMPROVEMENT AREA

NOTES

1. EXISTING STRUCTURES AND UTILITIES WERE LEFT IN PLACE UNLESS INDICATED OTHERWISE.
2. SEE SHEETS 10, 11 AND 12 FOR TYPICAL CONNECTION DETAILS.
3. GRADES SHOWN REPRESENT TOP OF THE FINAL COVER SYSTEM.
4. GROUNDWATER MONITORING WELLS, FIRE HYDRANTS, AND VALVES WERE EXTENDED AND WERE LEFT IN PLACE.
5. LIMIT OF LINED AREA IS DEFINED BY EXISTING EDGE OF GRASS (AREAS A AND E), GRAVEL SHOULDER OR EXISTING FENCE (AREA A).
6. AREA A: GEOMEMBRANE LINED AREA IS 166,300 SQ. FT. AND THE CONCRETE CAPPED AREA IS 9,321 SQ. FT.
AREA E: GEOMEMBRANE LINED AREA EXCLUDING FUTURE CONTROLS BUILDING IS 21,532 SQ. FT.
7. FENCE AROUND AREA A IS NOT SHOWN IN THIS DRAWING FOR CLARITY. REFER TO SHEET 13 FOR NEW FENCE LOCATION.
8. CONTRACTOR COORDINATED WITH OWNER TO REMOVE SIGN, EXTEND ITS FOUNDATION TO ELEVATION 763 FT. MSL (MIN.) AND REINSTALL SIGN.
9. REFER TO SHEETS 06A, 06B, AND 06C FOR PLAN, PROFILE AND DETAILS OF AREA E WALL.

12/22/2017

ALABAMA LICENSED No. 34145 PROFESSIONAL ENGINEER STEVEN J. MOELLER

THESE RECORD DRAWINGS HAVE BEEN PREPARED BASED UPON INFORMATION FROM VARIOUS SOURCES. THESE SOURCES HAVE BEEN REFERENCED ON THE APPROPRIATE DRAWINGS.

REFERENCES

1. TOPOGRAPHY FROM CALHOUN COUNTY (2012) AND LOWERY & ASSOCIATES LAND SURVEYING, LLC; DATED APRIL 17, 2013.
2. "ALTA / ACSM LAND TITLE SURVEY OF: OPERABLE UNIT 3 OF THE ANNISTON PCB SITE; PREPARED FOR: SOLUTIA INC." BY LOWERY & ASSOCIATES LAND SURVEYING, LLC; DATED APRIL 17, 2013.
3. THE IDENTIFICATION OF THE PURPOSE / TYPE / SIZE OF THE UNDERGROUND UTILITIES SHOWN WAS OBTAINED FROM THE DRAWING ENTITLED "STUMP.dwg" PROVIDED BY SOLUTIA INC.
4. THE AS-BUILT CONTOURS AND LIMITS OF WALL, CRUSHED NO.57 STONE, AND RIP RAP PROVIDED BY TURNER SURVEYING, LLC, DATED JUNE 13, 2016.

REV	DATE	REVISION DESCRIPTION	DES	CADD	CHK	RVW

PROJECT
PHARMACIA LLC / SOLUTIA INC.
OPERABLE UNIT 3 REMEDIAL ACTION
ANNISTON PCB SITE, ALABAMA

TITLE
AREA A AND AREA E FINAL CONDITIONS

Golder Associates | Solutia

PROJECT No. 1302962CQA.03
FILE No. 1302962CQA-006 RD-AREAS A & E Grading And E&S Plan
SCALE AS SHOWN
SHEET 06

G:\$Archive HG\433680 - Solutia\OU-3 RA Construction\AsBuiltRecord Drawings\1302962CQA-006 RD-AREAS A & E Grading And E&S Plan.dwg | Layout: 06 | Modified: amorales 12/18/2017 3:33 PM | Plotted: amorales 12/20/2017

FUTURE
CONTROLS BLDG.
(NOT PART OF RA CONTRACT)

MIN. 6" THICK CONCRETE

TW = 761.28'
IE PIPE = 759.28'
~ GROUND = 758.30'

6" OUTLET PIPE
THROUGH WALL

INSTALLED WEIR
2' WIDE X 8" DEEP
ALONG TOP OF WALL
SEE DETAIL 2/06B

CONCRETE
RETAINING WALL
SEE DETAIL 9/10

TW = 760.67'
IE PIPE = 758.67'
~ GROUND = 758.01'

EXISTING PUMPS, WET WELL
PIPING AND ELECTRICAL

MIN. 6" THICK
CONCRETE

7+00
7+23
0+00
0+50

TW = 760.37'
IE PIPE = 758.37'
~ GROUND = 758.14'

TW = 760.70'
IE PIPE = 758.70'
~ GROUND = 758.00'

TW = 760.89'
IE PIPE = 758.89'
~ GROUND = 757.65'

1+00

TW = 760.80'
IE PIPE = 758.80'
~ GROUND = 758.75'

TW = 760.92'
IE PIPE = 758.92'
~ GROUND = 757.07'

TW, SEE NOTE 5
IE PIPE = 760.00'
~ GROUND = 759.50'

SEE DETAIL 1/12

6+50

T-06

1"Ø WEEPHOLE
SEE DETAIL 9/10

#57 STONE DRAINAGE SYSTEM

1+50

TW = 763.41'
IE PIPE = 761.41'
~ GROUND = 761.25'

5+00
5+50
6+00

1"Ø WEEPHOLE
SEE DETAIL 9/10

TW, SEE NOTE 5
IE PIPE = 760.40'
~ GROUND = 760.06'

TW, SEE NOTE 5
IE PIPE = 760.16'
~ GROUND = 760.00'

HDPE GEOMEMBRANE
COVER SYSTEM
SEE DETAIL 5/10

T-18

EXISTING VALVE PIPE
CONCRETE VAULT
(VAULT RAISED AND
EXISTING GRATING REUSED)

SIGN

TOP OF SOIL COVER = ~761.0

1"Ø WEEPHOLE
SEE DETAIL 9/10

TW = 761.33'
IE PIPE = 759.33'
~ GROUND = 757.14'

2+00

4+50

HP

SEE NOTE 2

#57 STONE DRAINAGE SYSTEM

SEE WALL ALIGNMENT ON SHEET 06B

SEE NOTE 2

4+00
3+50
3+00
2+50

TW = 764.24'
IE PIPE = 762.24'
~ GROUND = 761.97'

TW = 762.50'
IE PIPE = 760.50'
~ GROUND = 760.11'

MIN. 6" THICK
CONCRETE

TW = 761.46'
IE PIPE = 759.46'
~ GROUND = 757.19'

762
764
760
760.5
761.0
761.5
762.0
762.5
763.0

OHE

NOTES

1. THE CONTRACTOR PLACED CONTRACTION JOINTS FOR THE RETAINING WALL ON A MAXIMUM 15 FOOT SPACING.

2. THE CONTRACTOR FOLLOWED ALDOT SPECIFICATIONS FOR RAISING TWO EXISTING LIGHT POLES WITHIN AREA E.

3. THE CONTRACTOR PLACED HDPE BOOT AROUND EXISTING POWER POLES WITHIN AREA E.

4. SEE SHEET 06B FOR DETAILS OF FOOTING CONSTRUCTION AROUND SUBSURFACE UTILITIES.

5. SEE SHEET 06C FOR PROFILE OF REVISED WALL ALIGNMENT ADJACENT TO FUTURE CONTROLS BUILDING.

6. SEE SHEET 11 FOR RETAINING WALL REINFORCEMENT DETAILS.

LEGEND

- EXISTING CONTOURS (2 FT. CONTOURS) - OUTSIDE CAPPED AREAS
- AS-BUILT CONTOURS (.5 FT CONTOURS)
- AREA E WALL
- EDGE OF GEOMEMBRANE LINER
- CONCRETE COVER
- NO. 57 STONE DRAINAGE SYSTEM
- MONITORING WELL

REFERENCES

1. TOPOGRAPHY FROM CALHOUN COUNTY (2012) AND LOWERY & ASSOCIATES LAND SURVEYING, LLC., DATED APRIL 17, 2013.

2. "ALTA / ACSM LAND TITLE SURVEY OF: OPERABLE UNIT 3 OF THE ANNISTON PCB SITE; PREPARED FOR: SOLUTIA INC." BY LOWERY & ASSOCIATES LAND SURVEYING, LLC, DATED APRIL 17, 2013.

3. THE AS-BUILT CONTOURS AND LIMITS OF WALL, CRUSHED NO.57 STONE, AND RIP RAP PROVIDED BY TURNER SURVEYING, LLC, DATED JUNE 13, 2016.

ABBREVIATIONS

TW = TOP OF WALL

IE PIPE = INVERT ELEVATION OF PIPE

AREA E

0 10 20 30
SCALE FEET

ALABAMA LICENSED No. 31745 PROFESSIONAL ENGINEER STEVEN J. MOELLER

12/22/2017

THESE RECORD DRAWINGS HAVE BEEN PREPARED BASED UPON INFORMATION FROM VARIOUS SOURCES. THESE SOURCES HAVE BEEN REFERENCED ON THE APPROPRIATE DRAWINGS.

REV	DATE	REVISION DESCRIPTION	DES	CADD	CHK	RVW

PROJECT

PHARMACIA LLC / SOLUTIA INC.
OPERABLE UNIT 3 REMEDIAL ACTION
ANNISTON PCB SITE, ALABAMA

TITLE

AREA E FINAL CONDITIONS AND PLAN VIEW OF AREA E WALL

Golder Associates

Solutia

PROJECT No. 1302962CQA.03

FILE No. 1302962CQA-006B RD-AREA E Detailed Wall Layout

SCALE AS SHOWN

SHEET 06A

G:\Archive H\9433680 - Solutia\OU-3 RA Construction\AsBuilt\Record Drawings\1302962CQA-006B RD-AREA E Detailed Wall Layout.dwg | Layout: 06A | Modified: amorales 12/18/2017 3:50 PM | Plotted: amorales 12/20/2017

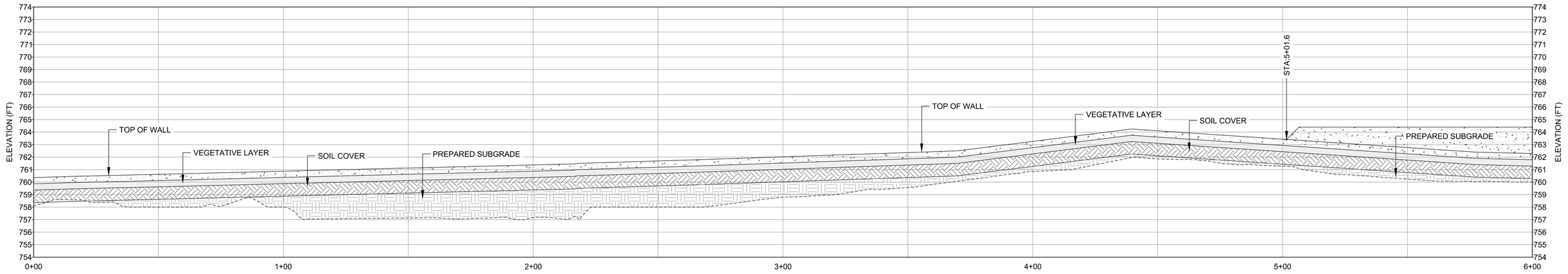

WALL ALIGNMENT REVISED
STA:0+00 - STA:6+00

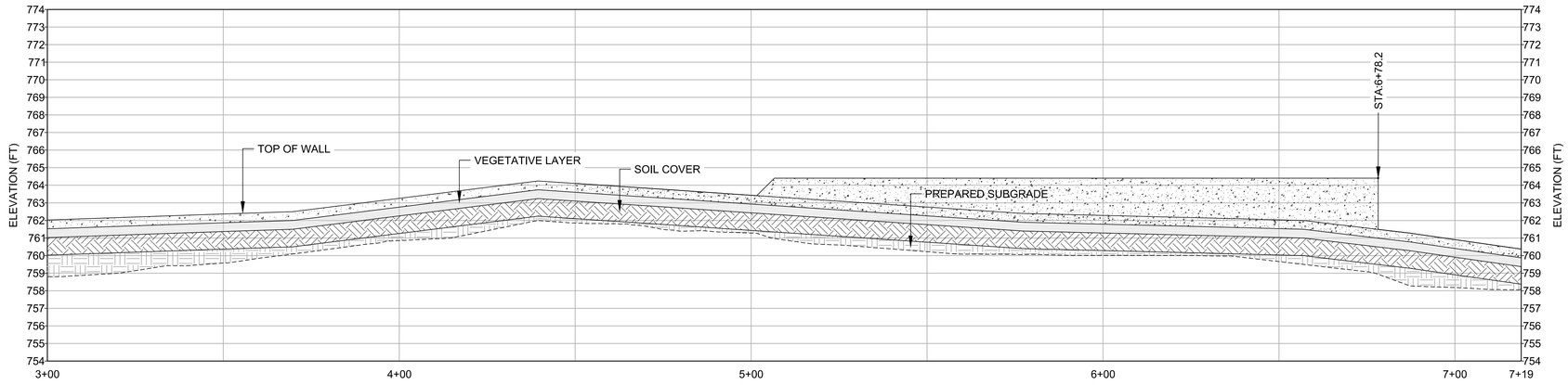

WALL ALIGNMENT REVISED
STA:3+00 - STA:7+19

AREA E WALL LONGITUDINAL PROFILE

0 20 40 60
5X VERTICAL EXAGGERATION FEET

NOTES

1. THE CONTRACTOR PLACED AN HDPE OR PVC SLEEVE AROUND PIPES THAT PASSED THROUGH THE WALL FOOTING PRIOR TO CONSTRUCTING THE FOOTING. THE SLEEVE WAS AT LEAST TWO INCHES GREATER IN DIAMETER THAN THE EXISTING PIPE. THE SLEEVE WAS SECURED IN PLACE AND THE ANNULAR SPACE FILLED WITH FLEXIBLE MATERIAL.

2. IF A MINIMUM OF TWO INCHES OF DGA COVER MATERIAL WAS NOT MAINTAINED ABOVE EXISTING UTILITIES BENEATH THE WALL FOOTING, AN HDPE OR PVC SLEEVE WAS USED TO COVER THE UPPER PORTION OF THE PIPE THAT PASSED BENEATH THE FOOTING. THE SLEEVE WAS AT LEAST TWO INCHES GREATER IN DIAMETER THAN THE EXISTING PIPE AND THE ANNULAR SPACE ABOVE THE PIPE WAS FILLED WITH FLEXIBLE MATERIAL.

3. 4,000 PSI CONCRETE MIX DESIGN WAS USED AS PROPOSED BY CONTRACTOR.

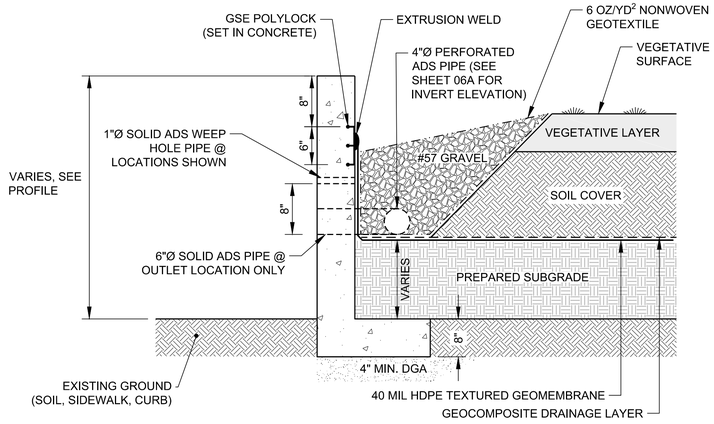

NTS 1 06B TYPICAL PERIMETER WALL IN AREA E AND GEOMEMBRANE TO CONCRETE CONNECTION

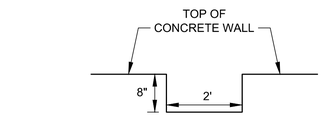

WEIR OPENING
2 FT WIDE X 8 IN DEEP

NTS 2 06B WEIR DETAIL

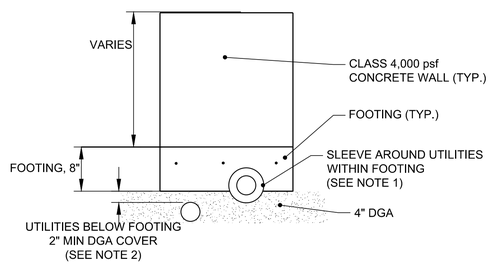

NTS 3 06B UTILITY OBSTRUCTIONS

ALABAMA LICENSED No. 32745 PROFESSIONAL ENGINEER STEVEN J. MOELLER

12/22/2017

THESE RECORD DRAWINGS HAVE BEEN PREPARED BASED UPON INFORMATION FROM VARIOUS SOURCES. THESE SOURCES HAVE BEEN REFERENCED ON THE APPROPRIATE DRAWINGS.

REV	DATE	REVISION DESCRIPTION	DES	CADD	CHK	RVW

PROJECT
PHARMACIA LLC / SOLUTIA INC.
OPERABLE UNIT 3 REMEDIAL ACTION
ANNISTON PCB SITE, ALABAMA

TITLE
AREA E WALL ALIGNMENT

Golder Associates | Solutia | PROJECT No. 1302962CQA.03 | FILE No. 1302962CQA-006B RD-AREA E Detailed Wall Layout | SCALE AS SHOWN | SHEET 06B

G:\$Archive H\943680 - Solutia\OU-3 RA Construction\As-Built\Record Drawings\1302962CQA-006B RD-AREA E Detailed Wall Layout.dwg | Layout: 06B | Modified: amorales 12/18/2017 3:50 PM | Plotted: amorales 12/20/2017

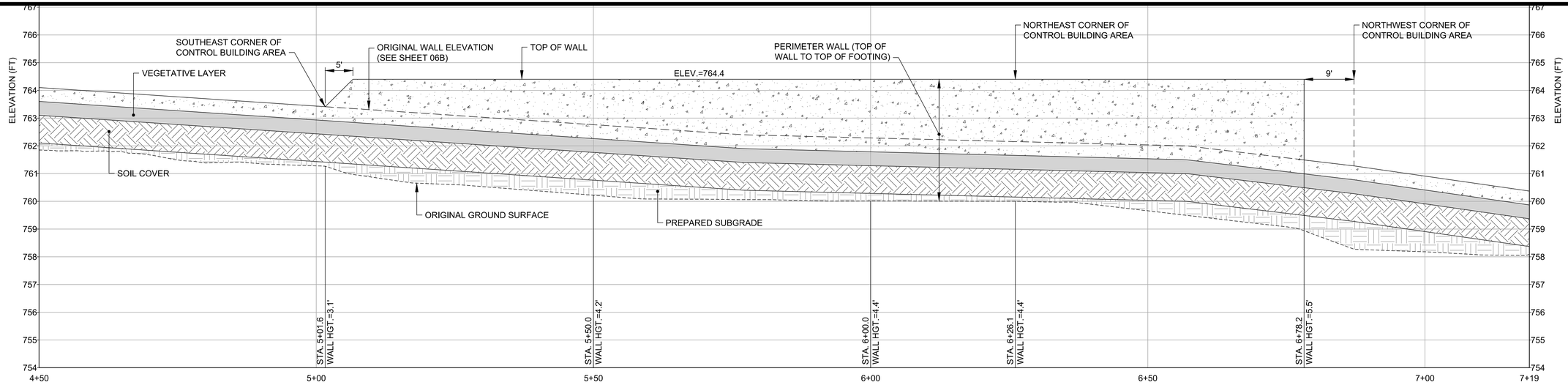

AREA E WALL LONGITUDINAL PROFILE - STA. 4+50 TO 7+19

0 20 40 60

5X VERTICAL EXAGGERATION FEET

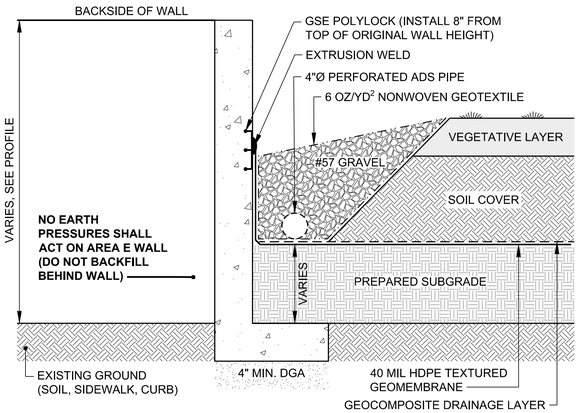

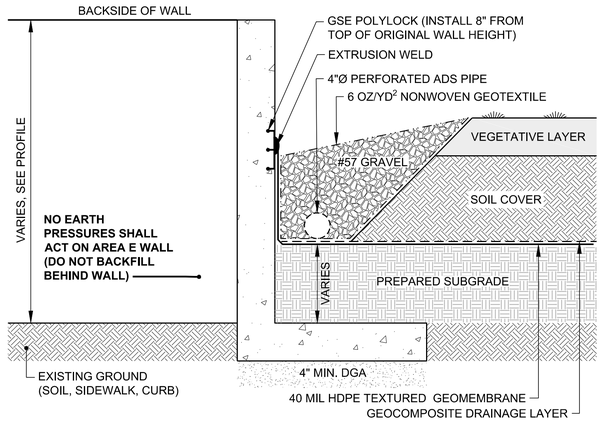

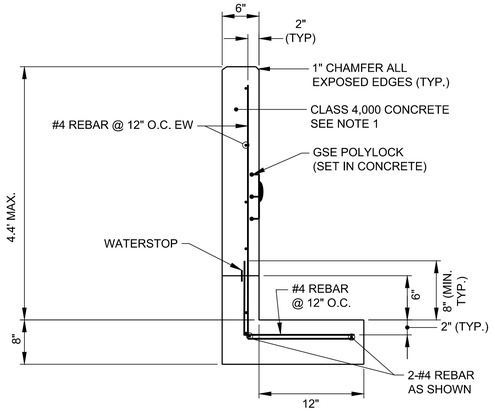

NTS 1 06C

TYPICAL PERIMETER WALL IN AREA E
STA. 5+01.6 TO 6+26.1

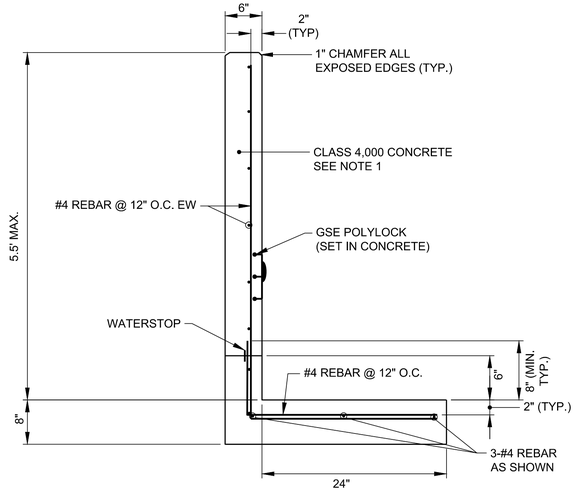

NTS 2 06C

TYPICAL PERIMETER WALL IN AREA E
STA. 6+26.1 TO 6+78.2

NOTES

1. 4,000 PSI CONCRETE MIX DESIGN WAS USED AS PROPOSED BY CONTRACTOR.
2. ALL REINFORCEMENT HAS A TWO INCH MINIMUM COVER.
3. THE CONTRACTOR PLACED CONTRACTION JOINTS FOR THE RETAINING WALL ON A MAXIMUM 15 FOOT SPACING.
4. **THE PROPOSED DESIGN WAS PREPARED ASSUMING A NEW RETAINING STRUCTURE WOULD BE CONSTRUCTED ON THE OUTSIDE OF THE PROPOSED WALL SUCH THAT NO EARTH PRESSURE FROM THE FILL MATERIAL FOR THE CONTROL BUILDING WILL BE PLACED UPON THE AREA E WALL.**
5. THE AREA TO THE BACKSIDE OF THE WALL WILL BE DRAINED ON THE SIDE OF THE CONTROL BUILDING.
6. THE FOUNDATION FOR THE RETAINING STRUCTURE FOR THE CONTROL BUILDING WAS CONSTRUCTED AT THE SAME ELEVATION AS THE FOUNDATION FOR THE AREA E WALL.
7. THE MAXIMUM BACKFILL HEIGHT ON THE FRONT SIDE OF THE WALL DOES NOT EXCEED 2 FEET FROM STATION 5+01.6 TO 6+26.1 OR 2.5 FEET FROM STATION 6+26.1 TO 6+78.2.



12/22/2017

THESE RECORD DRAWINGS HAVE BEEN PREPARED BASED UPON INFORMATION FROM VARIOUS SOURCES. THESE SOURCES HAVE BEEN REFERENCED ON THE APPROPRIATE DRAWINGS.

REV	DATE	REVISION DESCRIPTION	DES	CADD	CHK	RVW

PROJECT
PHARMACIA LLC / SOLUTIA INC.
OPERABLE UNIT 3 REMEDIAL ACTION
ANNISTON PCB SITE, ALABAMA

TITLE
AREA E WALL ALIGNMENT ADJACENT TO CONTROL BUILDING

Golder Associates | Solutia

PROJECT No. 1302962CQA.03 | FILE No. 1302962CQA-006C-RD-AREA E Wall Alignment Adjacent To Control Building

SCALE AS SHOWN

SHEET 06C

G:\Archive H1943680 - Solutia\OU-3 RA Construction\AsBuiltRecord Drawings\1302962CQA-006C-RD-AREA E Wall Alignment Adjacent To Control Building.dwg | Layout: 06C | Modified: amorales 12/18/2017 3:47 PM | Plotted: amorales 12/20/2017

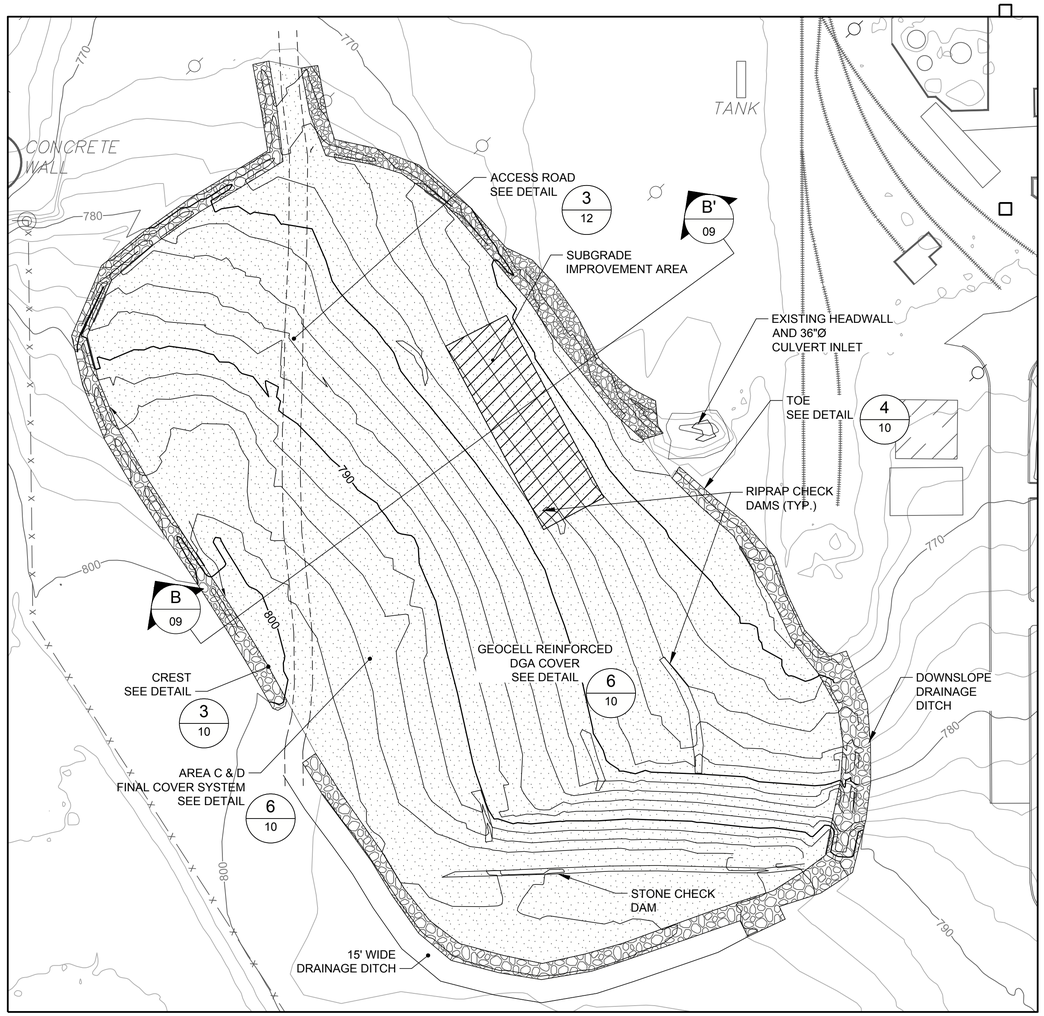

AREAS C & D FINAL CONDITIONS

0 50 100 150
SCALE FEET

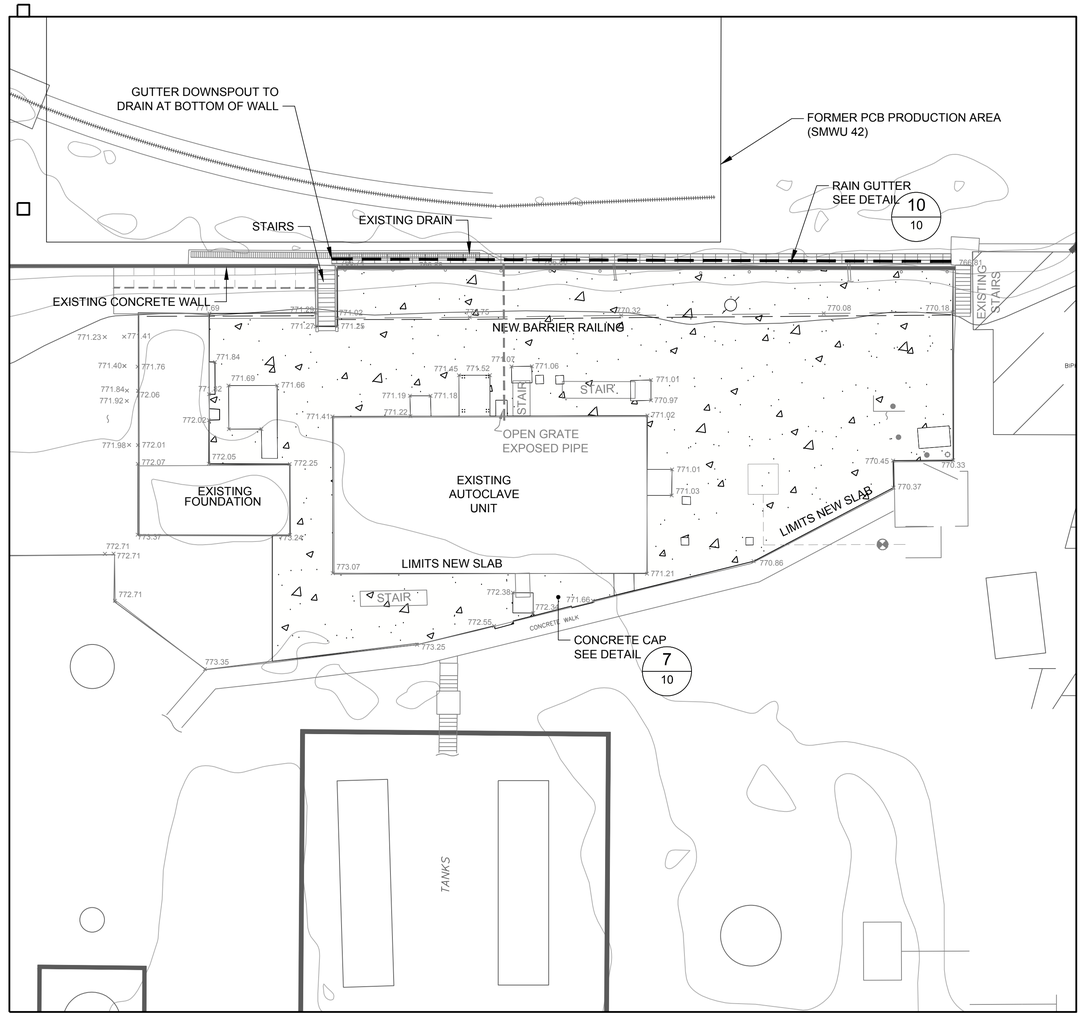

AUTOCLAVE UNIT FINAL CONDITIONS

0 15 30 45
SCALE FEET

ALABAMA LICENSED No. 37145 PROFESSIONAL ENGINEER STEVEN J. MOELLER

12/22/2017

LEGEND

- 780 — EXISTING CONTOURS (2 FT. INTERVAL) - OUTSIDE OF CAPPED AREAS
- ~~780~~ — AS-BUILT CONTOURS (2 FT. INTERVAL)
- FENCE
- CURB
- RAILROAD
- WALL
- POWER POLES (SEE NOTE 1)
- FH — FIRE HYDRANT (SEE NOTE 1)
- CONCRETE COVER
- RIP RAP OUTLET
- DENSE GRADED AGGREGATE (DGA)
- SUBGRADE IMPROVEMENT AREA
- MONITORING WELL

NOTES

1. SEE SHEETS 10, 11 AND 12 FOR TYPICAL CONNECTION DETAILS.
2. GRADES SHOWN REPRESENT THE TOP OF THE FINAL COVER SYSTEM.
3. AREAS C & D: DGA COVER AREA IS 158,217 SQ. FT.
AUTOCLAVE UNIT: THE CONCRETE CAPPED AREA IS 6,765 SQ. FT.
4. GROUNDING OF AUTOCLAVE UNIT WAS ACHIEVED BY RUNNING GROUND WIRE, THROUGH NON-CONDUCTIVE SLEEVE EMBEDDED WITHIN CONCRETE CAP, TO GROUND. OWNER DETERMINED GROUNDING LOCATIONS.

REFERENCES

1. TOPOGRAPHY FROM CALHOUN COUNTY (2012) AND LOWERY & ASSOCIATES LAND SURVEYING, LLC; DATED APRIL 17, 2013.
2. "ALTA / ACSM LAND TITLE SURVEY OF: OPERABLE UNIT 3 OF THE ANNISTON PCB SITE; PREPARED FOR: SOLUTIA INC." BY LOWERY & ASSOCIATES LAND SURVEYING, LLC; DATED APRIL 17, 2013.
3. AUTOCALAVE LAYOUT TAKEN FROM DWG. NO. T7235C04 FROM HARGROVE ENGINEERS + CONSTRUCTORS TITLED "AUTOCLAVE PROJECT, PAVING, GRADING, AND DRAINAGE PLAN" AND DATED 9/17/2013.
4. THE AS-BUILT CONTOURS AND LIMITS OF COVER SYSTEM AND RIP RAP PROVIDED BY TURNER SURVEYING, LLC, DATED JUNE 13, 2016.

THESE RECORD DRAWINGS HAVE BEEN PREPARED BASED UPON INFORMATION FROM VARIOUS SOURCES. THESE SOURCES HAVE BEEN REFERENCED ON THE APPROPRIATE DRAWINGS.

REV	DATE	REVISION DESCRIPTION	DES	CADD	CHK	RVW

PROJECT
PHARMACIA LLC / SOLUTIA INC.
OPERABLE UNIT 3 REMEDIAL ACTION
ANNISTON PCB SITE, ALABAMA

TITLE
AREAS C & D AND AUTOCLAVE UNIT FINAL CONDITIONS

Golder Associates | Solutia

PROJECT No. 1302962CQA.03 | FILE No. 1302962CQA-007 RD-AREAS C-D & Autoclave Grading And E&S Plan
SCALE AS SHOWN
SHEET 07

G:\Archive H\9433680 - Solutia\OU-3 RA Construction\As-Built\Record Drawings\1302962CQA-007 RD-AREAS C-D & Autoclave Grading And E&S Plan.dwg | Layout: AREAS C & D AND AUTOCLAVE UNIT FINAL CONDITIONS | Modified: amorales 12/18/2017 3:46 PM | Plotted: amorales 12/20/2017

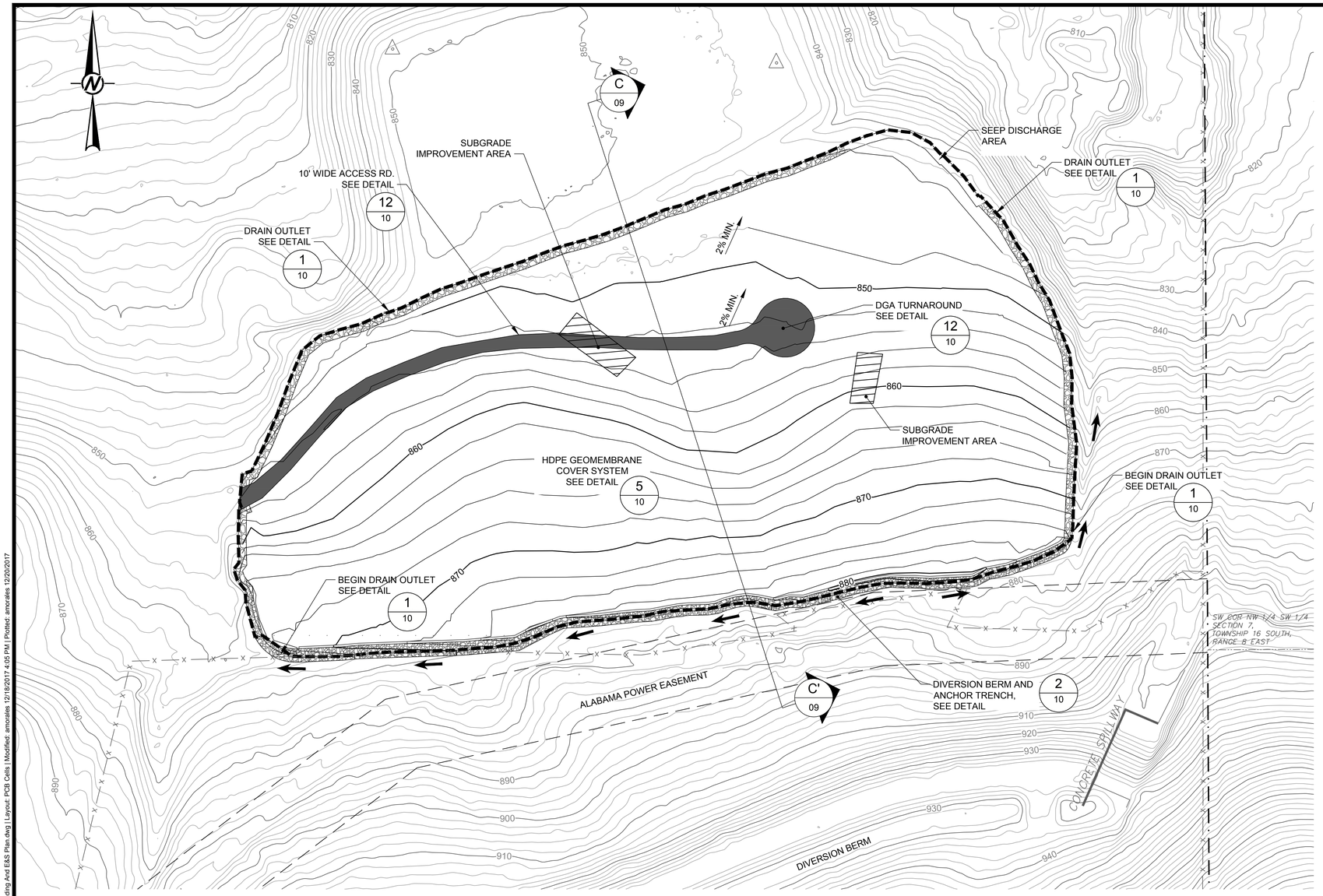

LEGEND

- 870 — EXISTING CONTOURS (2 FT. INTERVAL) - OUTSIDE CAPPED AREAS
- 870 — AS-BUILT CONTOURS (2 FT. INTERVAL)
- LIMITS OF GEOMEMBRANE LINER
- FENCE
- SURVEYED BOUNDARY FOR OU-3
- FLOW DIRECTION
- RIP RAP OUTLET
- SUBGRADE IMPROVEMENT AREA

NOTES

1. GRADES SHOWN REPRESENT TOP OF THE FINAL COVER SYSTEM.

2. PCB CELLS: GEOMEMBRANE LINED AREA IS 323,847 SQ. FT.

REFERENCES

1. TOPOGRAPHY FROM CALHOUN COUNTY (2012) AND LOWERY & ASSOCIATES LAND SURVEYING, LLC; DATED APRIL 17, 2013.

2. "ALTA / ACSM LAND TITLE SURVEY OF: OPERABLE UNIT 3 OF THE ANNISTON PCB SITE; PREPARED FOR: SOLUTIA, INC." BY LOWERY & ASSOCIATES LAND SURVEYING, LLC; DATED APRIL 17, 2013.

3. THE AS-BUILT CONTOURS AND LIMITS OF COVER SYSTEMS AND RIP RAP PROVIDED BY TURNER SURVEYING, LLC, DATED JUNE 13, 2016.

ALABAMA LICENSED No. 31745 PROFESSIONAL ENGINEER STEVEN J. MOELLER

12/22/2017

THESE RECORD DRAWINGS HAVE BEEN PREPARED BASED UPON INFORMATION FROM VARIOUS SOURCES. THESE SOURCES HAVE BEEN REFERENCED ON THE APPROPRIATE DRAWINGS.

0 60 120 180
SCALE FEET

REV	DATE	REVISION DESCRIPTION	DES	CADD	CHK	RVW

PROJECT
PHARMACIA LLC / SOLUTIA INC.
OPERABLE UNIT 3 REMEDIAL ACTION
ANNISTON PCB SITE, ALABAMA

TITLE
PCB CELLS FINAL CONDITIONS

Golder Associates

Solutia

PROJECT No. 1302962CQA.03
FILE No. 1302962CQA-008 RD-PCB Cells Grading And E&S Plan
SCALE AS SHOWN
SHEET
08

G:\Archive H\943680 - Solutia\OU-3 RA Construction\AsBuiltRecord Drawings\1302962CQA-008 RD-PCB Cells Grading And E&S Plan.dwg | Layout: PCB Cells | Modified: amorales 12/18/2017 4:05 PM | Plotted: amorales 12/20/2017

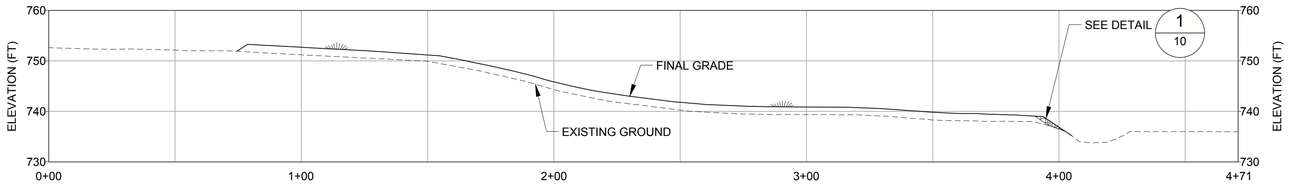

A 09 AREA A SECTION A-A'

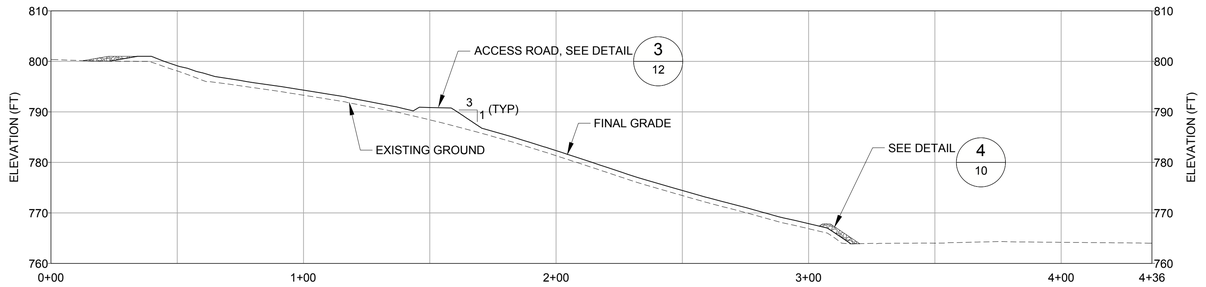

B 09 AREAS C & D SECTION B-B'

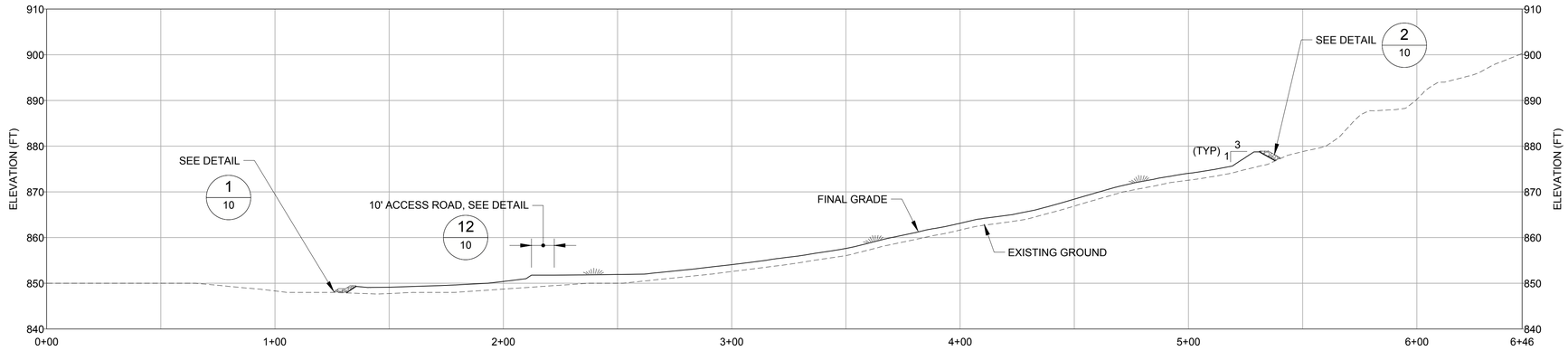

C 09 PCB CELLS SECTION C-C'

LEGEND

FINAL GRADE

EXISTING GROUND

NOTES

1. DETAILED PROFILE OF THE CONCRETE WALL FOR AREA E SHOWING EXISTING GROUND SURFACE ELEVATION, PROPOSED BOTTOM OF FOOTING ELEVATION, AND TOP OF WALL ELEVATION IS PROVIDED IN SHEETS 06A THROUGH 06C.

ALABAMA LICENSED No. 34145 PROFESSIONAL ENGINEER STEVEN J. MOELLER

12/22/2017

THESE RECORD DRAWINGS HAVE BEEN PREPARED BASED UPON INFORMATION FROM VARIOUS SOURCES. THESE SOURCES HAVE BEEN REFERENCED ON THE APPROPRIATE DRAWINGS.

0 30 60 90
HORIZONTAL SCALE FEET

0 15 30 45
VERTICAL SCALE FEET

REV	DATE	REVISION DESCRIPTION	DES	CADD	CHK	RVW

PROJECT

PHARMACIA LLC / SOLUTIA INC.
OPERABLE UNIT 3 REMEDIAL ACTION
ANNISTON PCB SITE, ALABAMA

TITLE

CROSS SECTIONS

Golder Associates | Solutia

PROJECT No. 1302962CQA.03 | FILE No. 1302962CQA-009 RD-Sections

SCALE AS SHOWN

SHEET 09

G:\$Archive H\9433680 - Solutia\OU-3 RA Construction\AsBuilt\Record Drawings\1302962CQA-009 RD-Sections.dwg | Layout: Sections | Modified: amorales 12/18/2017 4:03 PM | Plotted: amorales 12/20/2017

NOTES:
1. AREA A - NORTH, SOUTH AND EAST BOUNDARIES.

2. PCB CELLS - NORTH, EAST, AND WEST BOUNDARIES.

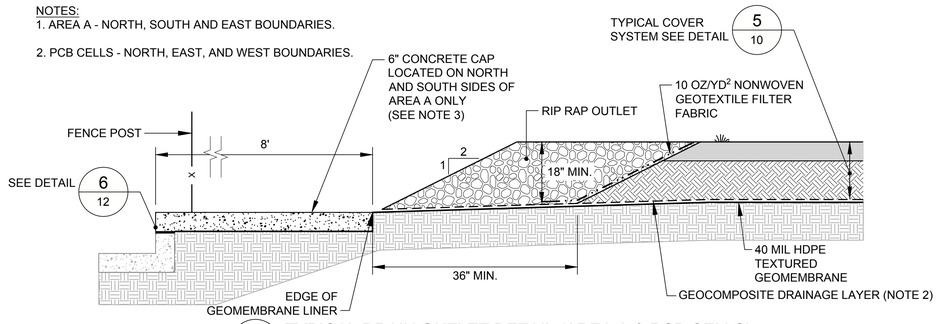

NTS 1/10 TYPICAL DRAIN OUTLET DETAIL (AREA A & PCB CELLS)

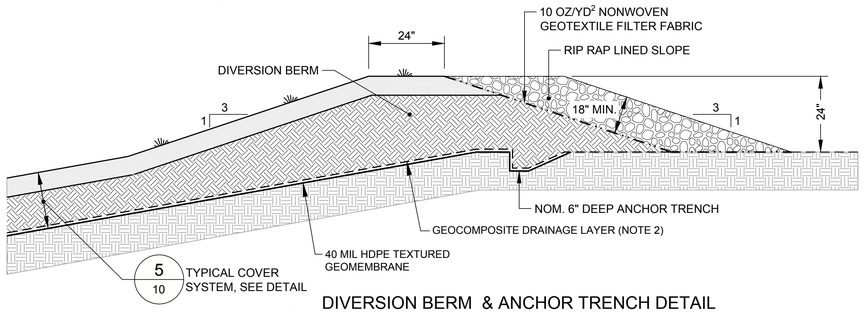

NTS 2/10 DIVERSION BERM & ANCHOR TRENCH DETAIL SOUTH BOUNDARY (PCB CELLS)

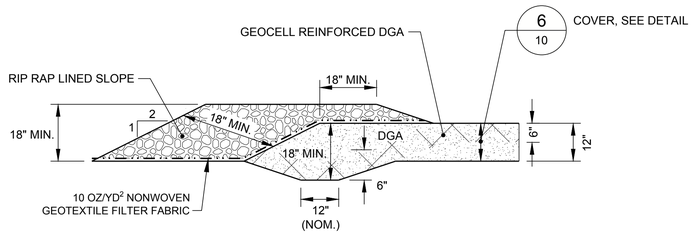

NOTE: GEOCELLS ANCHORED WITH 18" REBAR STAKES WITH A MINIMUM SPACING OF 1 STAKE PER 50 SQ. FT.

NTS 3/10 ANCHOR TRENCH & CREST DETAIL (AREAS C & D)

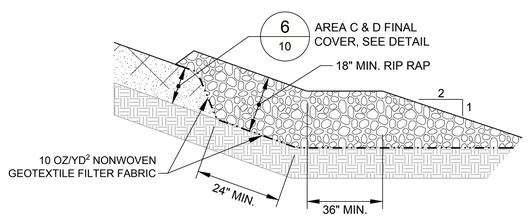

NTS 4/10 TOE OF AREAS C & D

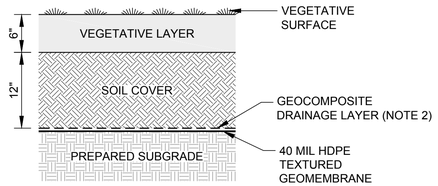

NTS 5/10 TYPICAL FINAL COVER SECTION (AREAS A, E, AND PCB CELLS)

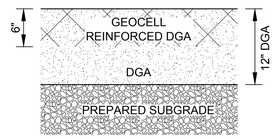

NTS 6/10 AREAS C & D FINAL COVER SECTION

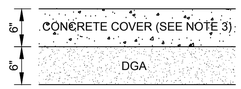

NTS 7/10 CONCRETE FINAL COVER SECTION (AUTOCLAVE UNIT)

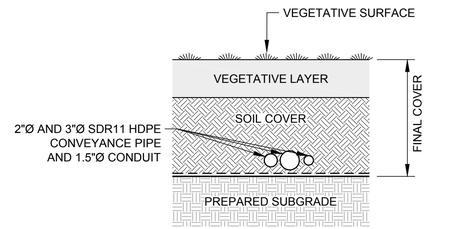

NTS 8/10 TYPICAL CONVEYANCE PIPE WITHIN FINAL COVER (AREA A)

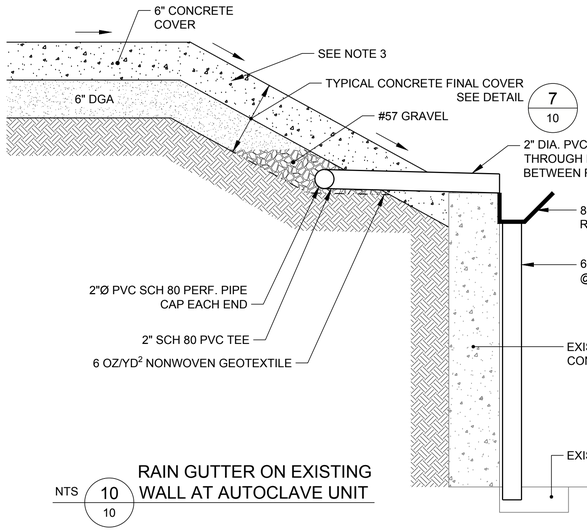

NTS 10/10 RAIN GUTTER ON EXISTING WALL AT AUTOCLAVE UNIT

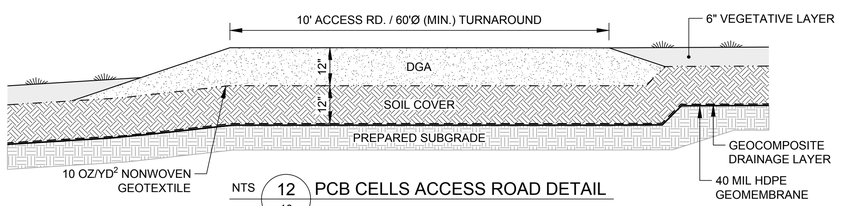

NTS 12/10 PCB CELLS ACCESS ROAD DETAIL

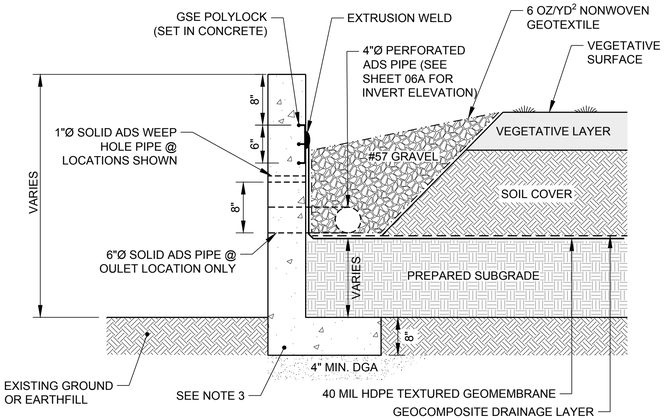

NTS 9/10 TYPICAL PERIMETER WALL IN AREA E AND GEOMEMBRANE TO CONCRETE CONNECTION

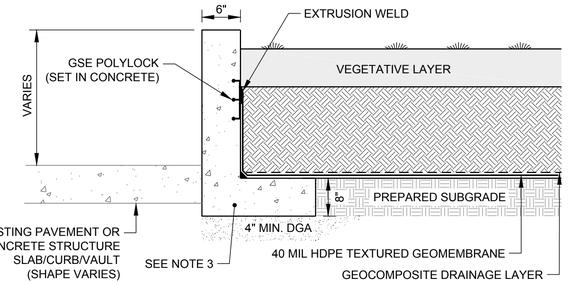

NTS 11/10 TYPICAL CONNECTION TO EXISTING CONCRETE STRUCTURES / PAVEMENTS

12/22/2017

THESE RECORD DRAWINGS HAVE BEEN PREPARED BASED UPON INFORMATION FROM VARIOUS SOURCES. THESE SOURCES HAVE BEEN REFERENCED ON THE APPROPRIATE DRAWINGS.

NOTES

1. ALL RIP RAP WAS CLASS 1 PER ALDOT SPECIFICATIONS.

2. GEOCOMPOSITE CONSISTED OF A MINIMUM 200 MIL GEONET BONDED TO AN 8 OZ/YD^2 GEOTEXTILE ON EACH SIDE. SPECIFIED TRANSMISSIVITY = 1.0x10^{-4} M^2/SEC. (REFER TO TECHNICAL SPECIFICATIONS FOR TESTING CONDITIONS).

3. SEE SHEET 11 FOR REINFORCEMENT DETAILS.

ALABAMA LICENSED No. 34145 PROFESSIONAL ENGINEER STEVEN J. MOELLER

REV	DATE	REVISION DESCRIPTION	DES	CADD	CHK	RVW

PROJECT
PHARMACIA LLC / SOLUTIA INC.
OPERABLE UNIT 3 REMEDIAL ACTION
ANNISTON PCB SITE, ALABAMA

TITLE
TYPICAL COVER DETAILS

Golder Associates | Solutia

PROJECT No. 1302962CQA.03 | FILE No. 1302962CQA-010-11-12 RD-Details
SCALE AS SHOWN
SHEET 10

G:\$Archive H19433680 - Solutia\OU-3 RA Construction\AsBuiltRecord Drawings\1302962CQA-010-11-12 RD-Details.dwg | Layout: 10 | Modified: amorales 12/18/2017 4:20 PM | Plotted: amorales 12/20/2017

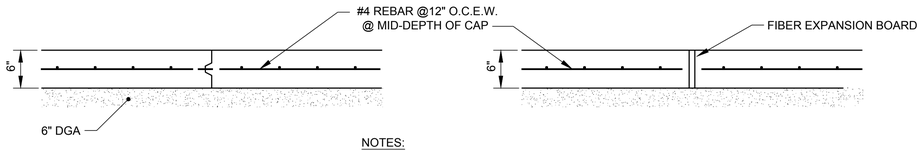

CONCRETE CAP

CONSTRUCTION JOINT

NOTES:
1. SAW CUT CONTRACTION JOINTS 2 INCH DEEP. SEAL CONTRACTION JOINTS WITH ELASTOMERIC SEAL.

CONCRETE CAP

EXPANSION JOINT

NTS 1/11 CONSTRUCTION & EXPANSION JOINT DETAILS

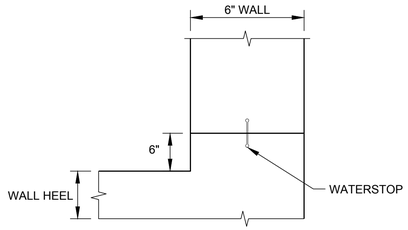

NTS 2/11 WATERSTOP DETAIL

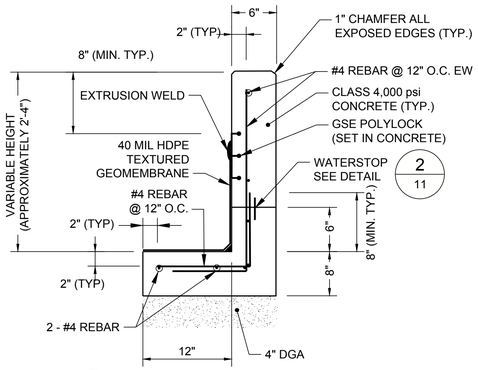

NTS 3/11 TYPICAL RETAINING WALL SECTION

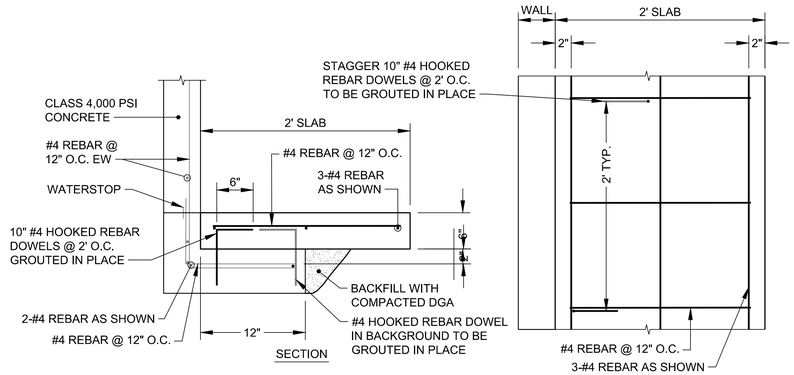

NTS 4/11 FOOTING MODIFICATION DETAIL
STA: 1+03 TO 3+00

NOTE
1. FOR REBAR DOWELS, DRILL 5/8" HOLES AND REMOVE DUST FROM HOLES. USE ANCHORING EPOXY TO ANCHOR DOWELS INTO EXISTING SLABS.

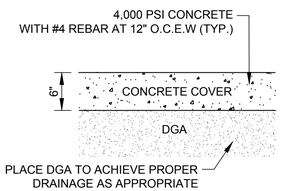

NTS 5/11 CONCRETE FINAL COVER SECTION
(AREA A AND AREA E)

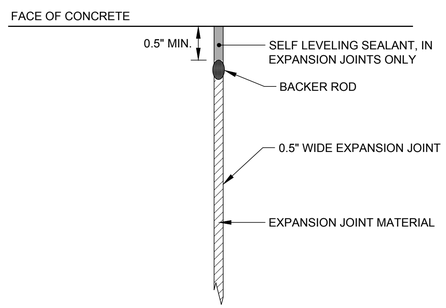

NTS 6/11 EXPANSION JOINT DETAIL

THESE RECORD DRAWINGS HAVE BEEN PREPARED BASED UPON INFORMATION FROM VARIOUS SOURCES. THESE SOURCES HAVE BEEN REFERENCED ON THE APPROPRIATE DRAWINGS.

NOTES

1. GEOCOMPOSITE CONSISTED OF A MINIMUM 200 MIL GEONET BONDED TO A 8 OZ/YD^2 GEOTEXTILE ON EACH SIDE. SPECIFIED TRANSMISSIVITY = 10x10^{-4} M^2/SEC. (REFER TO TECHNICAL SPECIFICATIONS FOR TESTING CONDITIONS).

2. PER SPECIFICATIONS, CONTRACTOR PLACED FIBER EXPANSION JOINT BETWEEN EXISTING CONCRETE STRUCTURES, AND RETAINING WALL AND CONCRETE COVER.

3. ALL CONCRETE FOR AUTOCLAVE AREA WAS CLASS 3,000 PSI. REMAINING CONCRETE WAS CLASS 4,000 PSI. EXPOSED CONCRETE EDGES HAVE A ONE INCH CHAMFER.

4. ALL REBAR REINFORCEMENT IS GRADE 60. REINFORCEMENT HAS TWO INCHES OF CONCRETE COVER WHEN FORMED AND THREE INCHES OF CONCRETE COVER WHEN CONSTRUCTED AGAINST SOIL OR ROCK.

ABBREVIATIONS:
O.C. - ON CENTER
E.W. - EACH WAY



12/22/2017

REV	DATE	REVISION DESCRIPTION	DES	CADD	CHK	RVW

PROJECT
PHARMACIA LLC / SOLUTIA INC.
OPERABLE UNIT 3 REMEDIAL ACTION
ANNISTON PCB SITE, ALABAMA

TITLE
MISCELLANEOUS DETAILS (1 OF 2)

Golder Associates

Solutia

PROJECT No. 1302962CQA.03
FILE No. 1302962CQA-010-11-12 RD-Details
SCALE AS SHOWN
SHEET 11

G:\$Archive Hi\943380 - Solutia\OU-3 RA Construction\AsBuiltRecord Drawings\1302962CQA-010-11-12 RD-Details.dwg | Layout: MISCELLANEOUS DETAILS (1 OF 2) | Modified: amorales 12/18/2017 4:20 PM | 12/18/2017 4:20 PM | Plotted: amorales 12/20/2017

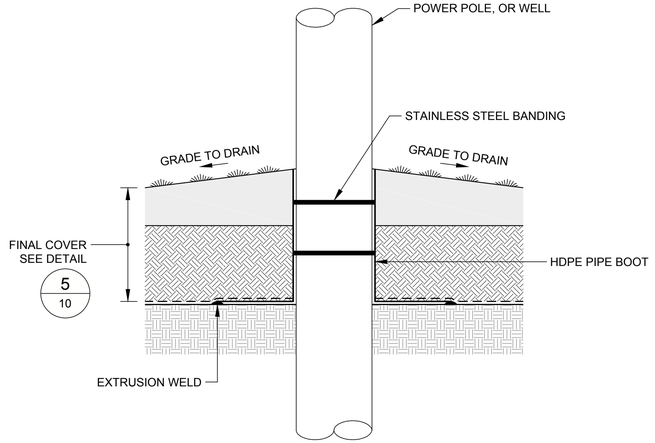

NOTE: THICKNESS OF SOIL COVER INCREASED AROUND POWER POLES, WELLS AND FIRE HYDRANTS TO PROVIDE POSITIVE DRAINAGE AWAY FROM FEATURES.

NTS 1 / 12 TYPICAL GEOMEMBRANE / POWER POLE OR WELL CONNECTION

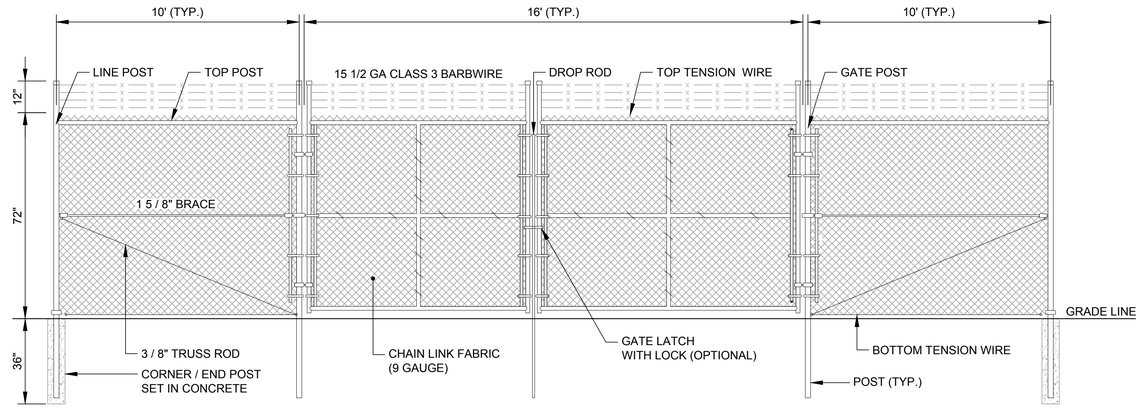

NTS 2 / 12 TYPICAL CHAIN LINK FENCE

SEE SHEET 13 FOR LOCATION OF NEW FENCE

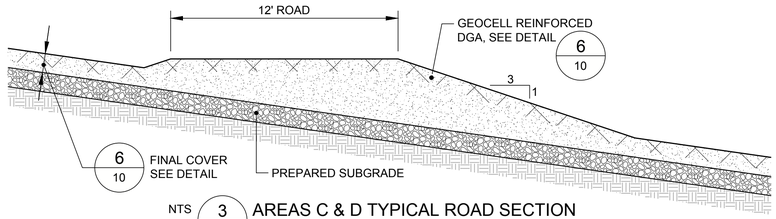

NTS 3 / 12 AREAS C & D TYPICAL ROAD SECTION

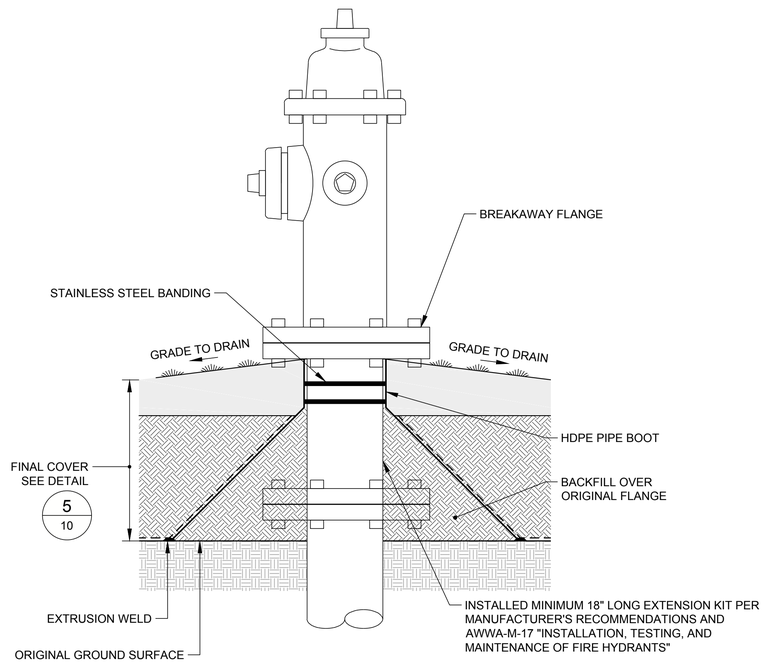

NTS 4 / 12 TYPICAL FIRE HYDRANT EXTENSION

THESE RECORD DRAWINGS HAVE BEEN PREPARED BASED UPON INFORMATION FROM VARIOUS SOURCES. THESE SOURCES HAVE BEEN REFERENCED ON THE APPROPRIATE DRAWINGS.

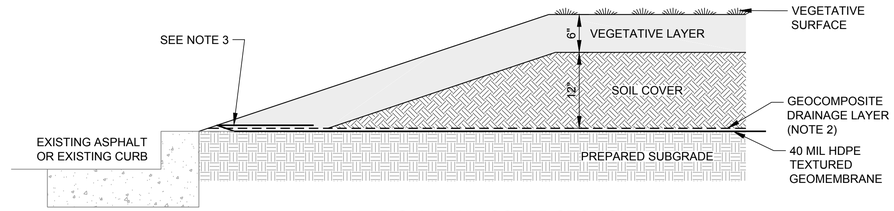

NTS 5 / 12 TYPICAL FINAL COVER SECTION ADJOINING EXISTING CURB (AREA A)

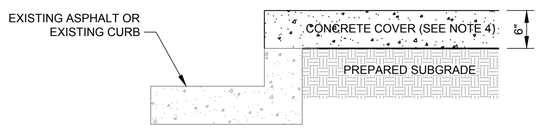

NTS 6 / 12 CONCRETE CURB EXTENSION

NOTES

1. THICKNESS OF SOIL COVER INCREASED AROUND POWER POLES, WELLS OR FIRE HYDRANTS TO PROVIDE POSITIVE DRAINAGE AWAY FROM FEATURES.

2. GEOCOMPOSITE CONSISTED OF A MINIMUM 200 MIL GEONET BONDED TO A 8 OZ/YD^2 GEOTEXTILE ON EACH SIDE. SPECIFIED TRANSMISSIVITY = 10x10^{-4} M^2/SEC. (REFER TO TECHNICAL SPECIFICATIONS FOR TESTING CONDITIONS).

3. 18" MIN. OF THE GEOMEMBRANE WRAPPED OVER THE GEOCOMPOSITE AND USED SANDBAGS INSTEAD OF AN ANCHOR TRENCH TO TEMPORARILY HOLD GEOMEMBRANE AND GEOCOMPOSITE IN PLACE DURING INSTALLATION.

4. SEE SHEET 11 FOR REINFORCEMENT DETAILS.



12/22/2017

REV	DATE	REVISION DESCRIPTION	DES	CADD	CHK	RVW

PROJECT

PHARMACIA LLC / SOLUTIA INC.
OPERABLE UNIT 3 REMEDIAL ACTION
ANNISTON PCB SITE, ALABAMA

TITLE

MISCELLANEOUS DETAILS (2 OF 2)

Golder Associates

Solutia

PROJECT No. 1302962CQA.03 | FILE No. 1302962CQA-010-11-12 RD-Details

SCALE AS SHOWN

SHEET 12

G:\Archive HI\433680 - Solutia\OU-3 RA Construction\As-Built\Record Drawings\1302962CQA-010-11-12 RD-Details.dwg | Layout: MISCELLANEOUS DETAILS (2 OF 2) | Modified: amorales 12/18/2017 4:20 PM | Plotted: amorales 12/20/2017

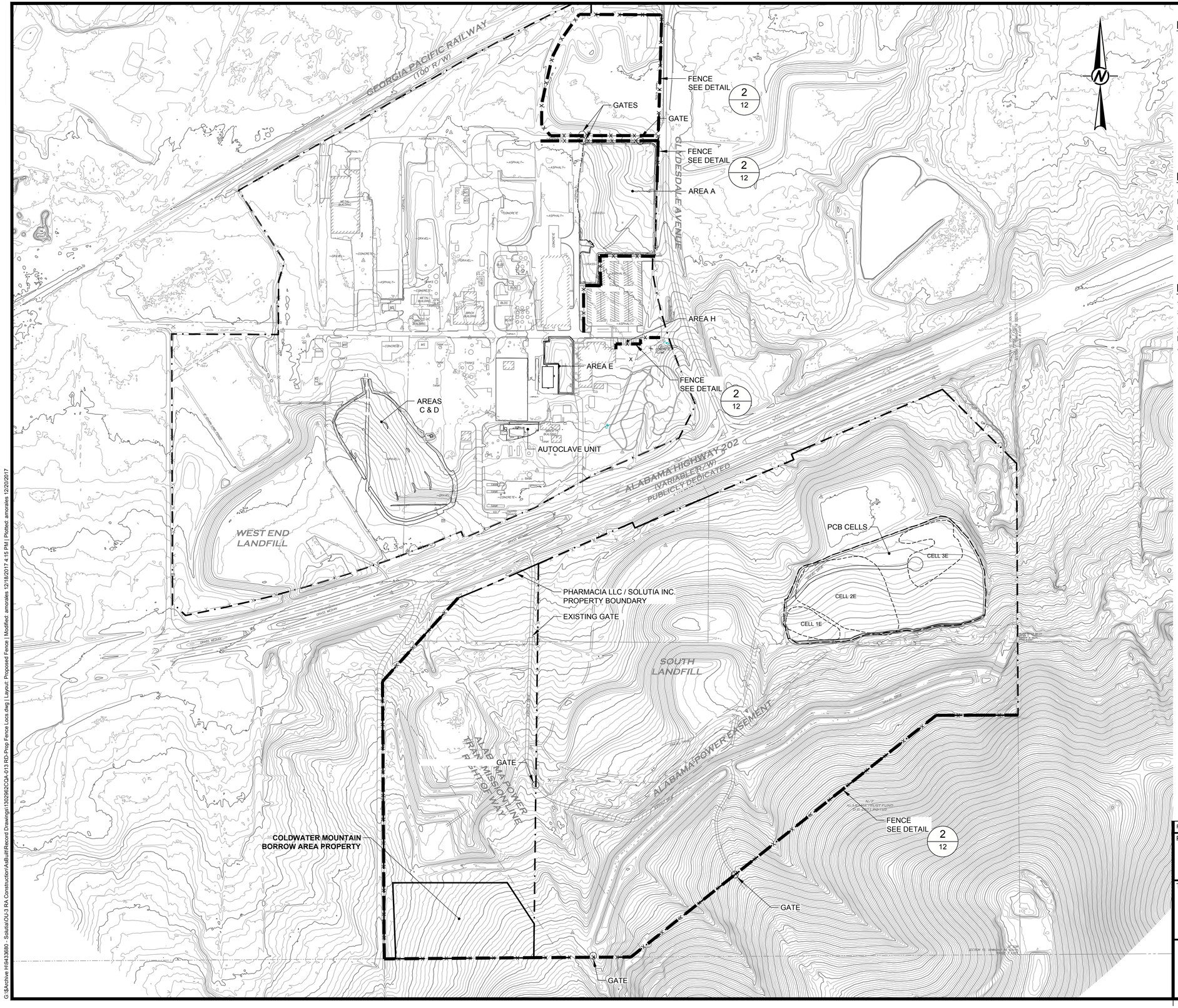

LEGEND

- EXISTING CONTOURS (2 FT. INTERVALS)
- EXISTING FENCE
- PCB CELL BOUNDARY
- SURVEYED BOUNDARY FOR OU-3
- FENCE (INSTALLED AS PART OF THE RA)
- PHARMACIA LLC / SOLUTIA INC. PROPERTY BOUNDARY

NOTES

1. TIED FENCING INTO EXISTING FENCING AND INTO EXISTING BUILDING, AS REQUIRED TO PREVENT ENTRY ONTO THE PROPERTY.

2. ADDITIONAL FENCING ALONG THE SOUTH OF THE PCB CELLS WAS REMOVED AND REPLACED AS NECESSARY TO CONSTRUCT THE CELLS.

REFERENCES

1. TOPOGRAPHY FROM CALHOUN COUNTY (2012) AND LOWERY & ASSOCIATES LAND SURVEYING, LLC; DATED APRIL 17, 2013.

2. "ALTA / ACSM LAND TITLE SURVEY OF: OPERABLE UNIT 3 OF THE ANNISTON PCB SITE; PREPARED FOR: SOLUTIA INC." BY LOWERY & ASSOCIATES LAND SURVEYING, LLC; DATED APRIL 17, 2013.

ALABAMA LICENSED No. 34145 PROFESSIONAL ENGINEER STEVEN J. MOELLER

12/22/2017

THESE RECORD DRAWINGS HAVE BEEN PREPARED BASED UPON INFORMATION FROM VARIOUS SOURCES. THESE SOURCES HAVE BEEN REFERENCED ON THE APPROPRIATE DRAWINGS.

0 200 400 600
SCALE FEET

REV	DATE	REVISION DESCRIPTION	DES	CADD	CHK	RVW

PROJECT
PHARMACIA LLC / SOLUTIA INC.
OPERABLE UNIT 3 REMEDIAL ACTION
ANNISTON PCB SITE, ALABAMA

TITLE
NEW FENCE LOCATION

Golder Associates

Solutia

PROJECT No. 1302962CQA.03
FILE No. 1302962CQA-013 RD-Prop Fence Locs
SCALE AS SHOWN
SHEET 13

G:\Archive HG\433680 - Solutia\OU-3 RA Construction\AsBuilt\Record Drawings\1302962CQA-013 RD-Prop Fence Locs.dwg | Layout: Proposed Fence | Modified: amorales 12/18/2017 4:15 PM | Plotted: amorales 12/20/2017

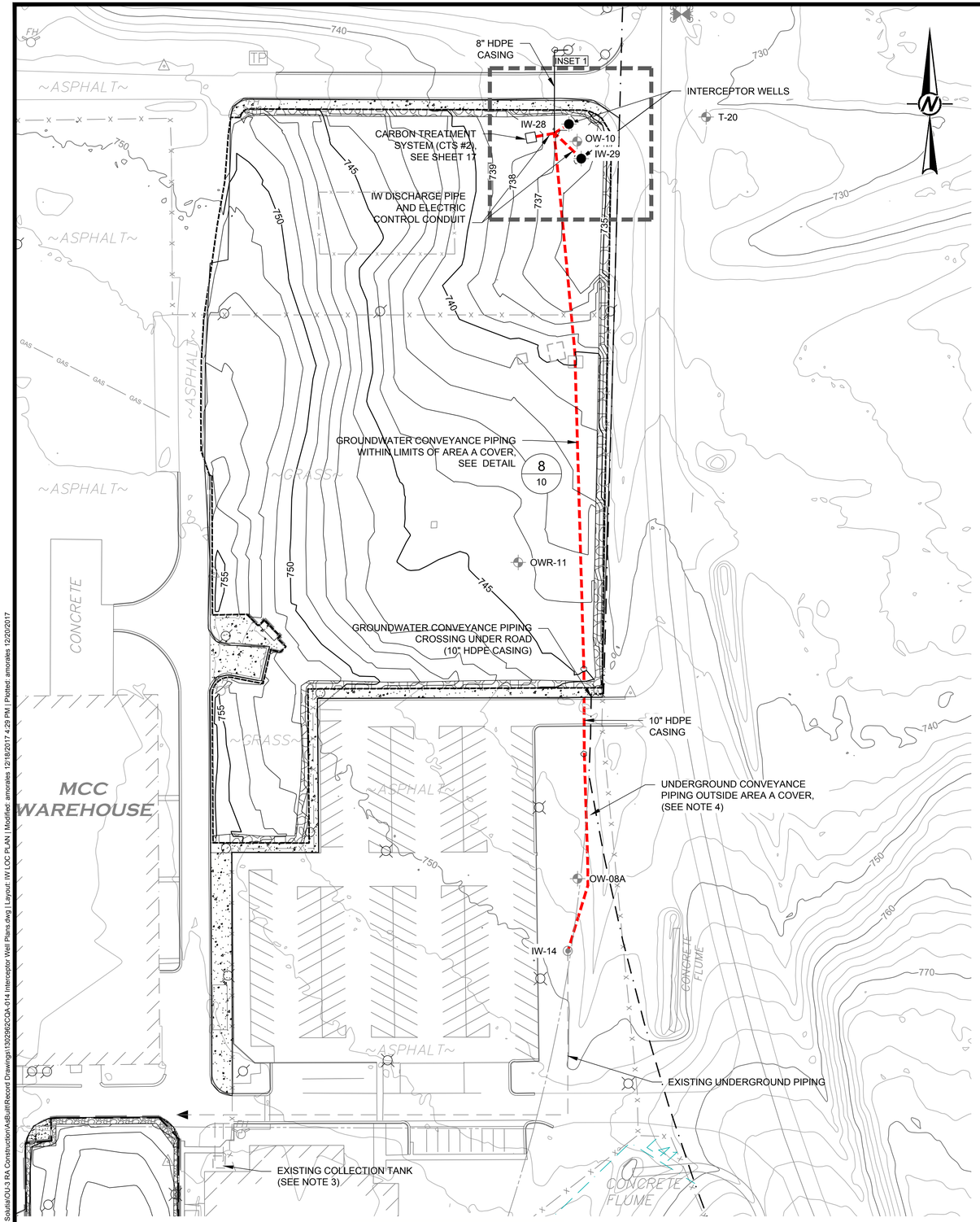

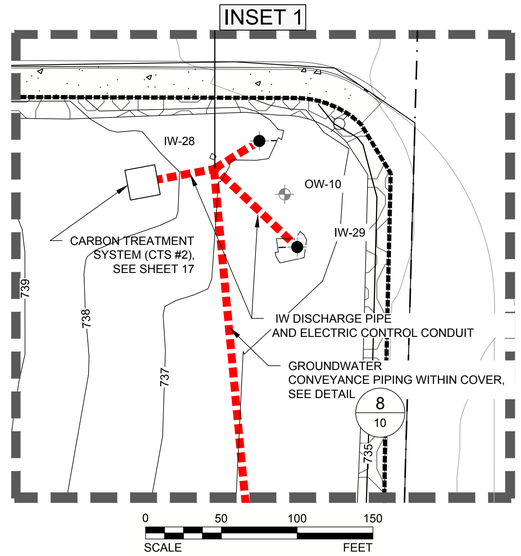

LEGEND

- EXISTING CONTOURS (2 FT. CONTOURS) - OUTSIDE CAPPED AREAS
- AS-BUILT CONTOURS (2 FT. CONTOURS)
- SURVEYED BOUNDARY FOR OU-3
- FENCE
- EDGE OF PAVEMENT / CURB
- RAILROAD
- MONITORING WELL
- EXISTING INTERCEPTOR WELL
- INTERCEPTOR WELL, SEE DETAIL 1/16
- LIGHT AND POWER POLES
- FIRE HYDRANT
- APPROXIMATE LOCATION OF EXISTING UNDERGROUND PIPING
- APPROXIMATE LOCATION OF GROUNDWATER CONVEYANCE PIPING

NOTES

1. CONCRETE VAULTS AND COVERS ARE H-20 RATED AND LIQUID TIGHT. GASKETS AND SEALS WERE PROVIDED AS NECESSARY.

2. ALL NEW CONVEYANCE PIPING IS HDPE PIPE UNLESS NOTED OTHERWISE. SDR VARIES.

3. EXISTING COLLECTION TANK DISCHARGES TO AN EXISTING WET WELL.

4. UNDERGROUND GROUNDWATER CONVEYANCE PIPING OUTSIDE LIMITS OF CAP WERE INSTALLED USING A DITCH WITCH OR EQUIVALENT, TO MINIMIZE THE AMOUNT OF SPOILS GENERATED. SOILS WERE DISPOSED OF ACCORDING TO PLANT EXCAVATION POLICY.

5. CONTRACTOR PROVIDED POWER SERVICE TO THE CARBON TREATMENT SYSTEM AND INTERCEPTOR WELLS IN ACCORDANCE WITH THE TECHNICAL SPECIFICATIONS.

6. SEE SHEET 19 FOR GROUNDWATER EXTRACTION SYSTEM PROCESS FLOW DIAGRAM.

REFERENCE

1.) ALTA / ACSM LAND TITLE SURVEY OF: OPERABLE UNIT 3 OF THE ANNISTON PCB SITE; PREPARED FOR: SOLUTIA INC." BY LOWERY & ASSOCIATES LAND SURVEYING, LLC; DATED APRIL 17, 2013.

12/22/2017

THESE RECORD DRAWINGS HAVE BEEN PREPARED BASED UPON INFORMATION FROM VARIOUS SOURCES. THESE SOURCES HAVE BEEN REFERENCED ON THE APPROPRIATE DRAWINGS.

ALABAMA LICENSED No. 31745 PROFESSIONAL ENGINEER STEVEN J. MOELLER

REV	DATE	REVISION DESCRIPTION	DES	CADD	CHK	RVW

PROJECT

PHARMACIA LLC / SOLUTIA INC.
OPERABLE UNIT 3 REMEDIAL ACTION
ANNISTON PCB SITE, ALABAMA

TITLE

IW-28 AND IW-29 LOCATION PLAN (AREA A)

Golder Associates | Solutia

PROJECT No. 1302962CQA.03 | FILE No. 1302962CQA-014 Interceptor Well Plans | SCALE AS SHOWN | SHEET 14

G:\Archive H\943680 - Solutia\OU-3 RA Constuction\As Built\Record Drawings\1302962CQA-014 Interceptor Well Plans.dwg | Layout: IW LOC PLAN | Modified: amorales 12/18/2017 4:29 PM | | Plotted: amorales 12/20/2017

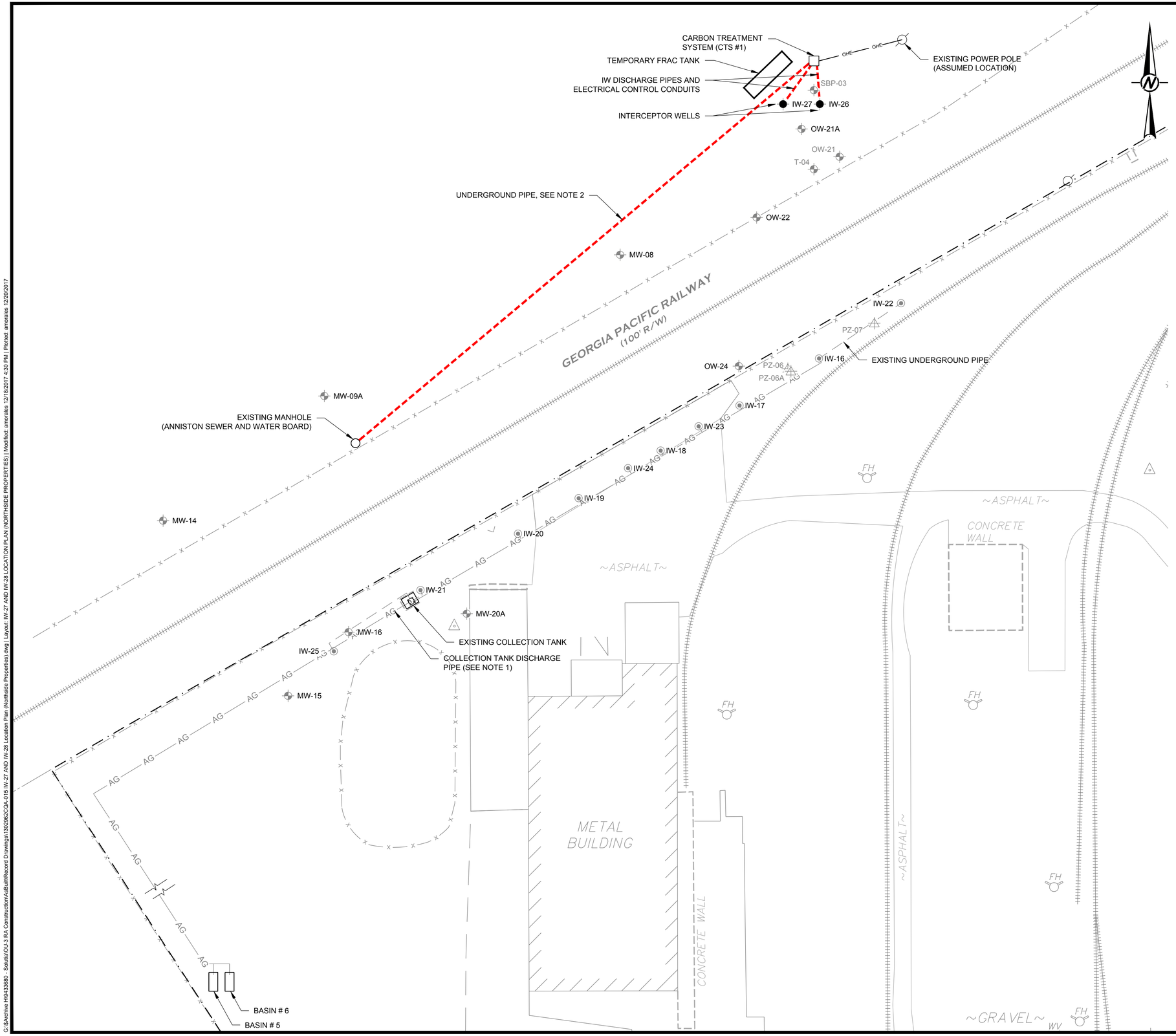

LEGEND

- SURVEYED BOUNDARY FOR OU-3
- FENCE
- EDGE OF PAVEMENT / CURB
- RAILROAD
- MONITORING WELL
- PIEZOMETER
- EXISTING INTERCEPTOR WELL
- INTERCEPTOR WELL
- LIGHT AND POWER POLES
- FIRE HYDRANT
- EXISTING ABOVEGROUND PIPING
- APPROXIMATE LOCATION OF EXISTING UNDERGROUND PIPING
- OVERHEAD ELECTRIC
- APPROXIMATE LOCATION OF GROUNDWATER CONVEYANCE PIPING

NOTES

1. EXISTING COLLECTION TANK DISCHARGES TO BASINS 5/6.
2. SOILS WERE DISPOSED OF ACCORDING TO PLANT EXCAVATION POLICY.
3. CONTRACTOR FOR PROVIDED POWER SERVICE TO THE CARBON TREATMENT SYSTEM AND INTERCEPTOR WELLS IN ACCORDANCE WITH THE TECHNICAL SPECIFICATIONS.
4. SEE SHEET 19 FOR GROUNDWATER EXTRACTION SYSTEM PROCESS FLOW DIAGRAM.

REFERENCE

1.) ALTA / ACSM LAND TITLE SURVEY OF: OPERABLE UNIT 3 OF THE ANNISTON PCB SITE; PREPARED FOR: SOLUTIA INC." BY LOWERY & ASSOCIATES LAND SURVEYING, LLC; DATED APRIL 17, 2013.

ALABAMA LICENSED No. 31145 PROFESSIONAL ENGINEER STEVEN J. MOELLER

12/22/2017

THESE RECORD DRAWINGS HAVE BEEN PREPARED BASED UPON INFORMATION FROM VARIOUS SOURCES. THESE SOURCES HAVE BEEN REFERENCED ON THE APPROPRIATE DRAWINGS.

0 40 80 120
SCALE FEET

REV	DATE	REVISION DESCRIPTION	DES	CADD	CHK	RVW

PROJECT
PHARMACIA LLC / SOLUTIA INC.
OPERABLE UNIT 3 REMEDIAL ACTION
ANNISTON PCB SITE, ALABAMA

TITLE
IW-27 AND IW-28 LOCATION PLAN (NORTHSIDE PROPERTIES)

Golder Associates | Solutia | PROJECT No. 1302962CQA.03 | FILE No. IW-27 AND IW-28 Location Plan (Northside Properties) | SCALE AS SHOWN | SHEET 15

G:\Archive II\943680 - Solutia\OU-3 RA Construction\AsBuiltRecord Drawings\1302962CQA-015 IW-27 AND IW-28 Location Plan (Northside Properties).dwg | Layout: IW-27 AND IW-28 LOCATION PLAN (NORTHSIDE PROPERTIES) | Modified: amorales 12/18/2017 4:30 PM | Plotted: amorales 12/20/2017

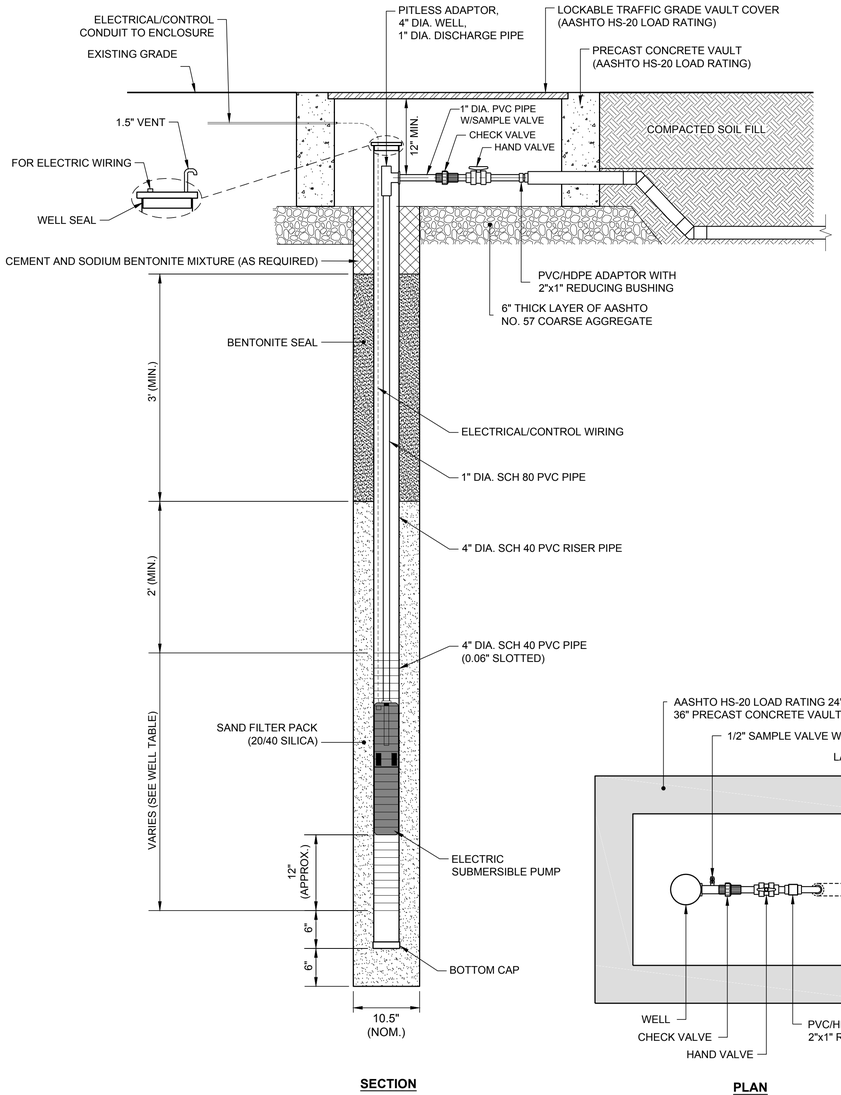

SECTION

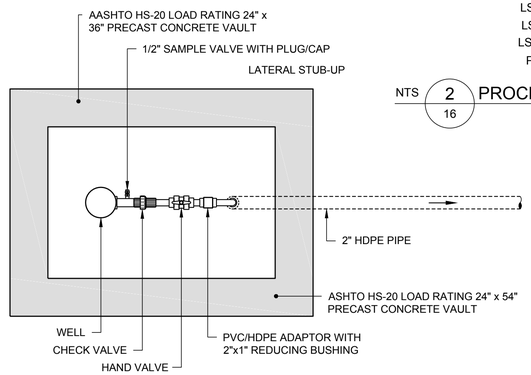

PLAN

NTS 1/16 INTERCEPTOR WELL INSTALLATION & CLOSURE (IW-26 & IW-27)

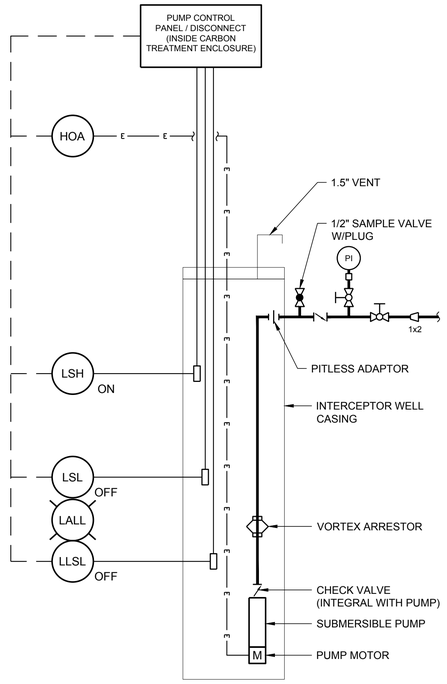

LEGEND

	GROUNDWATER
ε ε	ELECTRIC POWER
	CONTROL SIGNAL
	INSTRUMENT
	BALL VALVE, HAND
	CHECK VALVE
	VORTEX ARRESTOR
	REDUCER
LSH	LEVEL SENSOR, HIGH
LSL	LEVEL SENSOR, LOW
LSLL	LEVEL SENSOR, LOW-LOW
PI	PRESSURE INDICATOR

NTS 2/16 PROCESS & INSTRUMENTATION DIAGRAM

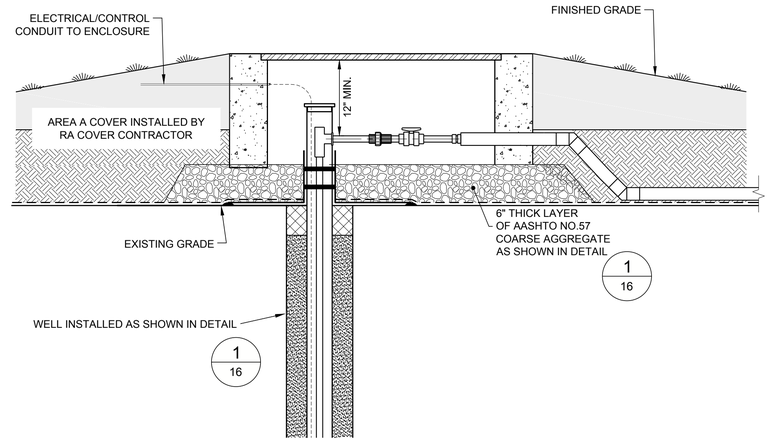

NTS 3/16 INTERCEPTOR WELL INSTALLATION & CLOSURE (IW-28 & IW-29)

NOTES

1. CONCRETE VAULTS AND COVERS ARE H-20 RATED AND LIQUID TIGHT. GASKETS AND SEALS WERE PROVIDED AS NECESSARY.

2. WELL VAULT OF IW-26 AND IW-27 WAS CONSTRUCTED BELOW THE CURRENT GROUND SURFACE AS SHOWN.

TABLE 1 - IW WELL TABLE

Well ID	Northing	Easting	Top of Screen (ft BGS)	Bottom of Screen (ft BGS)	Screened Interval Length (ft)	Top of Screen (ft MSL)	Bottom of Screen (ft MSL)	Casing Diameter (Inches)
IW-26	1147567	649189	10	35	25	731.9	706.9	4
IW-27	1147567	649159	10	35	25	731.9	706.9	4
IW-28	1147213	650291	8	38	30	726.7	696.7	4
IW-29	1147185	650301	8	38	30	726.7	696.7	4



12/22/2017

THESE RECORD DRAWINGS HAVE BEEN PREPARED BASED UPON INFORMATION FROM VARIOUS SOURCES. THESE SOURCES HAVE BEEN REFERENCED ON THE APPROPRIATE DRAWINGS.

REV	DATE	REVISION DESCRIPTION	DES	CADD	CHK	RVW

PROJECT
PHARMACIA LLC / SOLUTIA INC.
OPERABLE UNIT 3 REMEDIAL ACTION
ANNISTON PCB SITE, ALABAMA

TITLE
INTERCEPTOR WELL DETAIL AND P&ID

Golder Associates

Solutia

PROJECT No. 1302962CQA.03
FILE No. 1302962CQA-016 Interceptor Well Detail And P&ID
SCALE AS SHOWN
SHEET 16

G:\Archive II\943680 - Solutia\OU-3 RA Construction\AsBuiltRecord Drawings\1302962CQA-016 Interceptor Well Detail And P&ID.dwg | Layout: INTERCEPTOR WELL DETAIL AND PROCESS & INSTRUMENTATION DIAGRAM | Modified: amcelels 12/18/2017 4:26 PM | Plotted: amcelels 12/20/2017

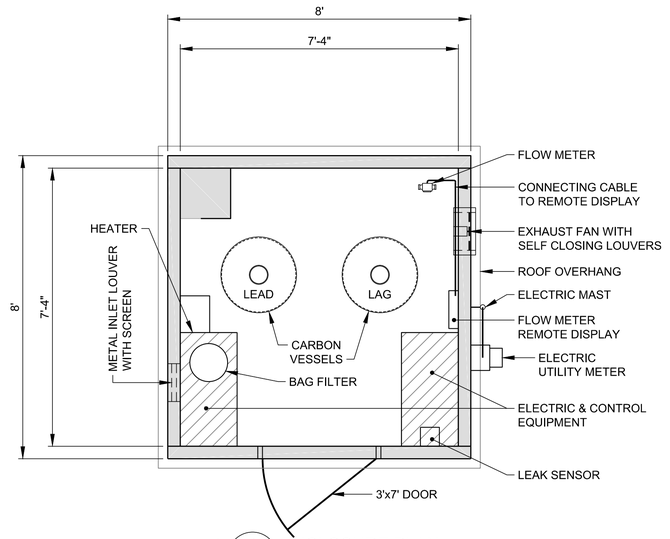

NTS 1/17 ENCLOSURE PLAN

(REFER TO SHEET 18 FOR PIPING AND INSTRUMENTATION DETAILS)

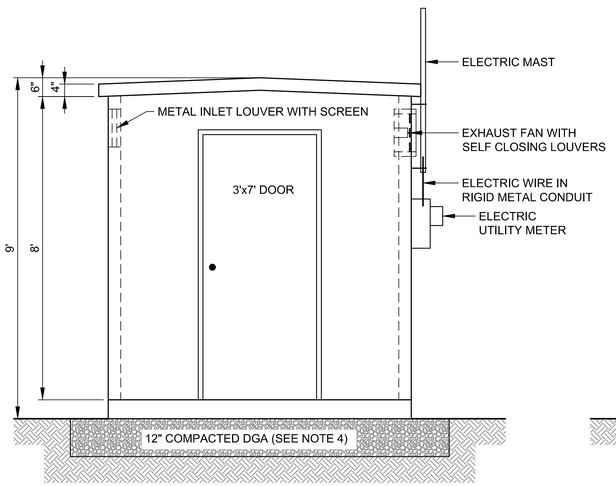

NTS 2/17 ENCLOSURE FRONT ELEVATION

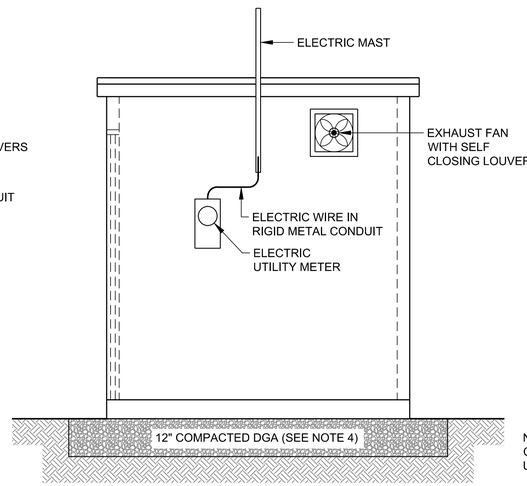

NOTE: ELECTRIC MAST USED FOR CTS #1 ONLY; CTS #2 ELECTRIC IS UNDERGROUND.

NTS 3/17 ENCLOSURE RIGHT SIDE ELEVATION

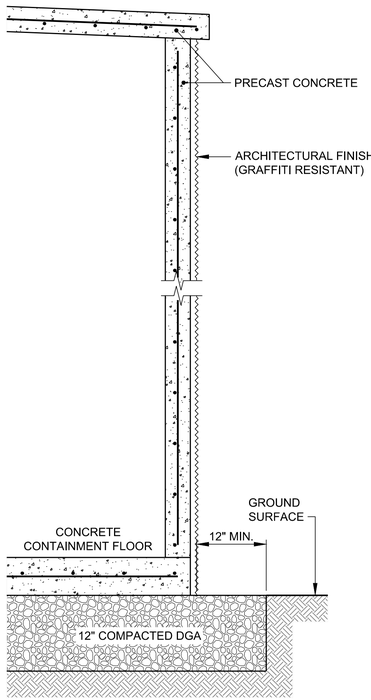

NTS 4/17 ENCLOSURE & FOUNDATION SECTION

NOTES

1. THE CARBON TREATMENT ENCLOSURES INCLUDE A HEATER TO PREVENT FREEZING.

2. THE CONCRETE CONTAINMENT FLOOR/CURB INCLUDES A LEAK SENSOR AND ALARM. THE ALARM SHALL ACTIVATE WHEN LIQUID HAS ACCUMULATED TO 50% OF THE DEPTH OF THE CURB HEIGHT.

3. THE CONTRACTOR ESTABLISHED NEW ELECTRICAL SERVICES TO THE NEW CARBON TREATMENT SYSTEMS TO POWER THE PUMPS, FAN, HEATER AND ALARM SENSOR. THE CONTRACTOR DETERMINED REQUIREMENTS FOR NEW ELECTRICAL SERVICE BASED ON FINAL ELECTRICAL LOAD AS DETERMINED BY CONTRACTOR.

4. FOUNDATION OF CARBON TREATMENT SYSTEM WITHIN AREA A WAS CONSTRUCTED ABOVE EXISTING GRADE.

ALABAMA LICENSED No. 34745 PROFESSIONAL ENGINEER STEVEN J. MOELLER

12/22/2017

THESE RECORD DRAWINGS HAVE BEEN PREPARED BASED UPON INFORMATION FROM VARIOUS SOURCES. THESE SOURCES HAVE BEEN REFERENCED ON THE APPROPRIATE DRAWINGS.

REV	DATE	REVISION DESCRIPTION	DES	CADD	CHK	RVW

PROJECT

PHARMACIA LLC / SOLUTIA INC.
OPERABLE UNIT 3 REMEDIAL ACTION
ANNISTON PCB SITE, ALABAMA

TITLE

CARBON TREATMENT SYSTEM

Golder Associates | Solutia

PROJECT No. 1302962CQA.03 | FILE No. 1302962CQA-017 Carbon Treatment System

SCALE AS SHOWN

SHEET 17

G:\Archive H\9433680 - Solutia\OU-3 RA Construction\AsBuilt\Record Drawings\1302962CQA-017 Carbon Treatment System.dwg | Layout: 17 CARBON TREATMENT SYSTEM | Modified: amorales 12/19/2017 4:25 PM | Plotted: amorales 12/20/2017

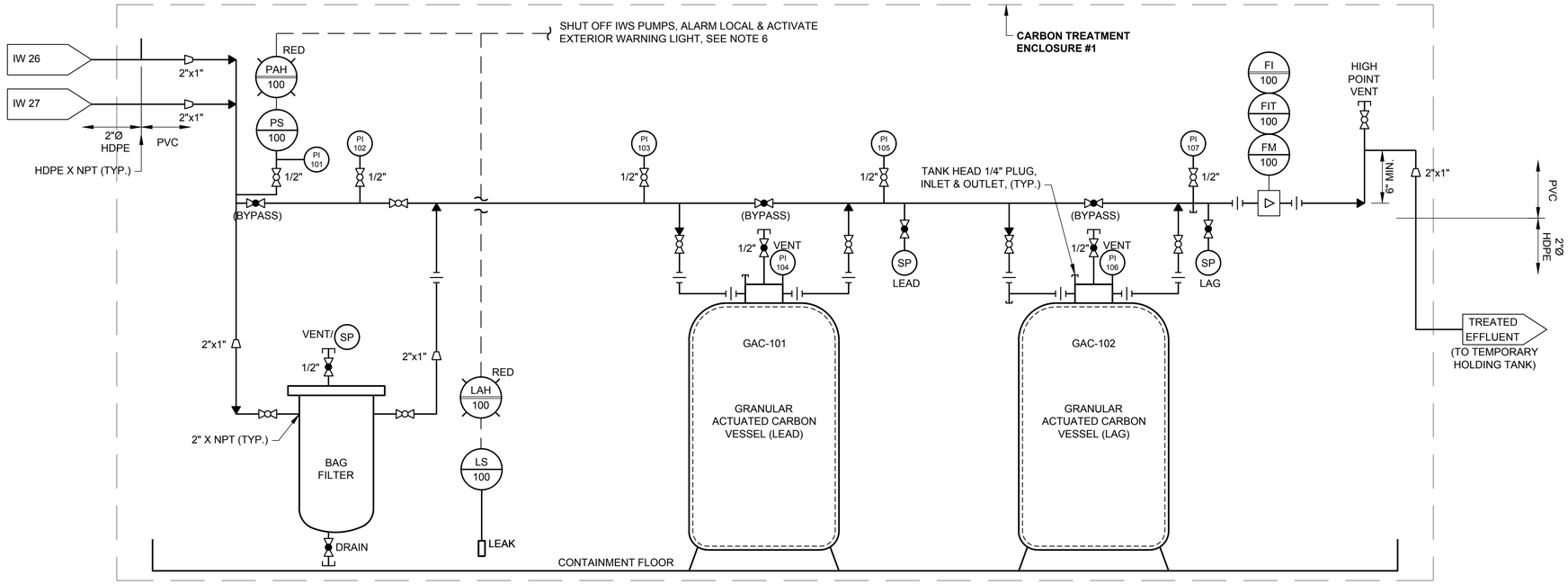

CTS #1

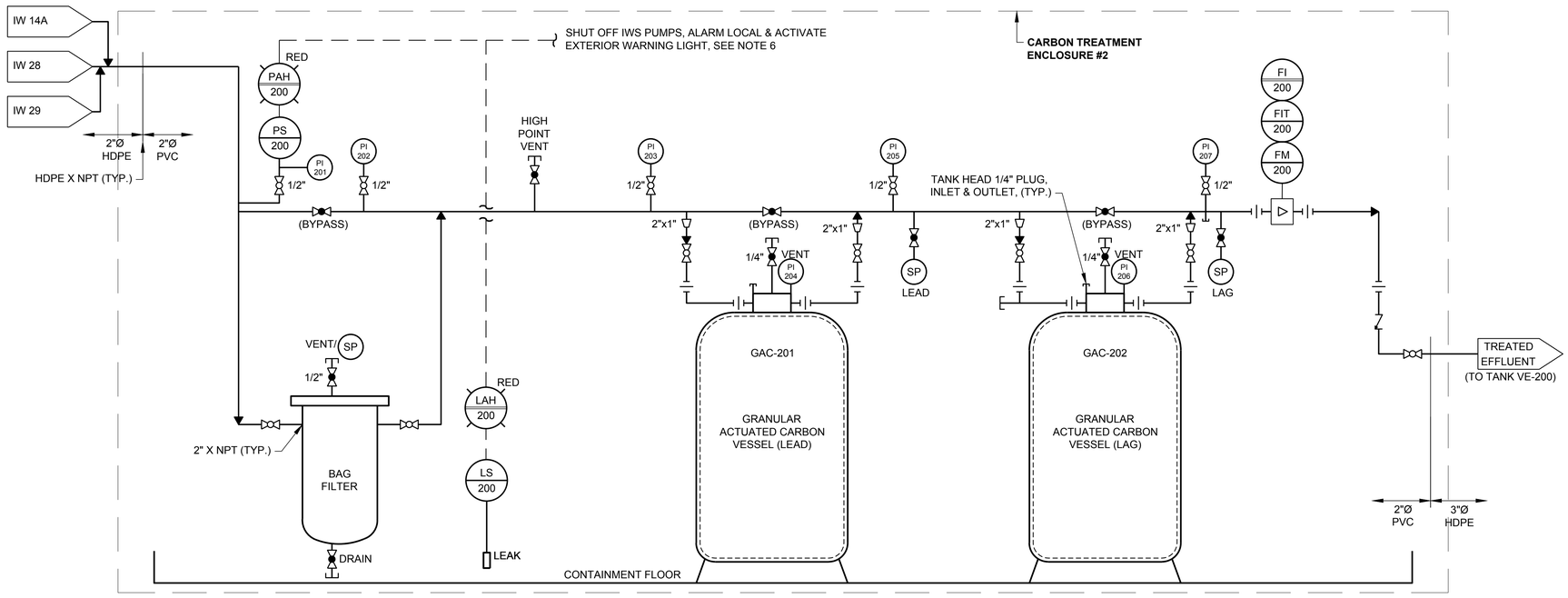

CTS #2

LEGEND

- CHECK VALVE
- BALL VALVE, HAND
- BALL VALVE, HAND (NORMALLY CLOSED)
- REDUCER
- UNION
- FLANGE CONNECTION
- PLUG/CAP
- PI — PRESSURE INDICATOR
- SP — SAMPLING PORT
- INSTRUMENT / CONTROL SIGNAL
- EXTRACTED IW GROUNDWATER
- LS XXX — LEVEL SWITCH
- PS XXX — PRESSURE SWITCH
- FI XXX — FLOW INDICATOR (PANEL)
- FIT XXX — FLOW INDICATOR TRANSMITTER
- FM XXX — FLOW METER
- LAH XXX — LEVEL ALARM, HIGH (PANEL)
- PAH XXX — PRESSURE ALARM, HIGH (PANEL)

NOTES

1. THE CARBON TREATMENT ENCLOSURES INCLUDE A HEATER TO PREVENT FREEZING.

2. THE CONCRETE CONTAINMENT FLOOR/CURB INCLUDES A LEAK SENSOR AND ALARM. THE ALARM SHALL ACTIVATE WHEN LIQUID HAS ACCUMULATED TO 50% OF THE DEPTH OF THE CURB HEIGHT.

3. THE CONTRACTOR ESTABLISHED NEW ELECTRICAL SERVICES TO THE NEW CARBON TREATMENT SYSTEMS. THE CONTRACTOR DETERMINED REQUIREMENTS FOR NEW ELECTRICAL SERVICE BASED ON FINAL ELECTRICAL LOAD AS DETERMINED BY CONTRACTOR.

4. FOUNDATION OF CARBON TREATMENT SYSTEM WITHIN AREA A WAS CONSTRUCTED ABOVE EXISTING GRADE.

5. CONTRACTOR WAS RESPONSIBLE FOR FIELD VERIFYING THE PROPOSED ROUTING OF THE NEW CONVEYANCE PIPES AND PERFORMING A UTILITY CLEARANCE ALONG THE SELECTED PIPE ROUTE.

6. AN ALARM SIGNAL IS SENT TO THE PLANT'S CONTROL ROOM VIA A WIRELESS TRANSMITTER WHEN A LEAK IS DETECTED IN THE UNIT OR EXCESSIVE PRESSURES ARE MEASURED.

ALABAMA LICENSED No. 34145 PROFESSIONAL ENGINEER STEVEN J. MOELLER

12/22/2017

THESE RECORD DRAWINGS HAVE BEEN PREPARED BASED UPON INFORMATION FROM VARIOUS SOURCES. THESE SOURCES HAVE BEEN REFERENCED ON THE APPROPRIATE DRAWINGS.

REV	DATE	REVISION DESCRIPTION	DES	CADD	CHK	RVW

PROJECT

PHARMACIA LLC / SOLUTIA INC.
OPERABLE UNIT 3 REMEDIAL ACTION
ANNISTON PCB SITE, ALABAMA

TITLE

CARBON TREATMENT SYSTEMS PROCESS & INSTRUMENTATION DIAGRAM

Golder Associates

Solutia

PROJECT No. 1302962CQA.03

FILE No. 1302962CQA-018 RD-SWMU-1 Modifications Process & Instrumentation Diagram

SCALE AS SHOWN

SHEET 18

G:\Archive H\9433680 - Solutia\OU-3 RA Construction\As Built\Record Drawings\1302962CQA-018 RD-SWMU-1 Modifications Process & Instrumentation Diagram.dwg | Layout: 18 | Modified: amorales 12/18/2017 4:14 PM | Plotted: amorales 12/20/2017

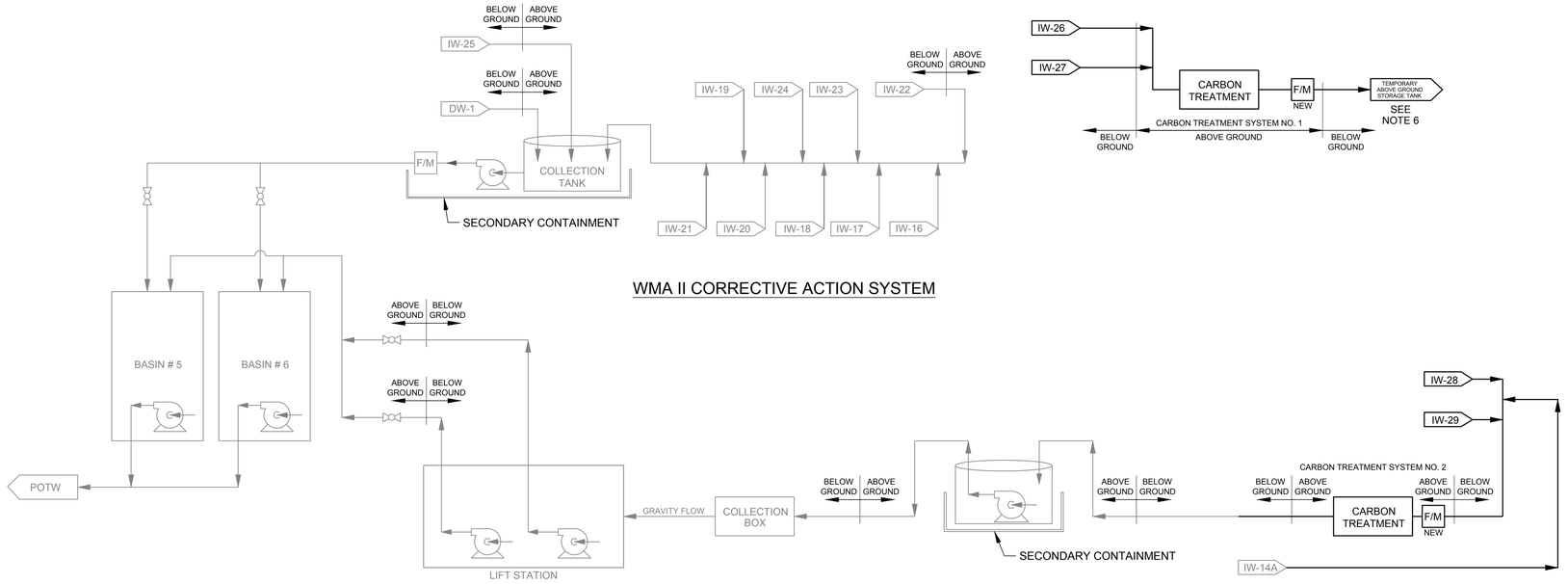

WMA II CORRECTIVE ACTION SYSTEM

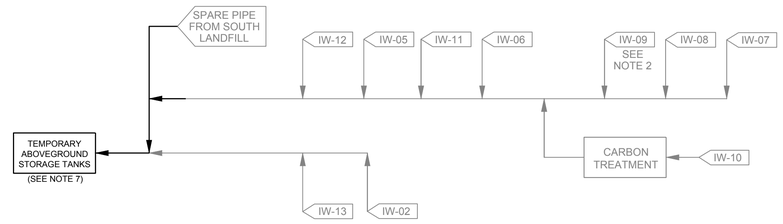

SWMU I CORRECTIVE ACTION SYSTEM

LEGEND

- NEW CONVEYANCE LINE
- EXISTING CONVEYANCE LINE
- IW-27 — NEW INTERCEPTOR WELL
- IW-06 — EXISTING INTERCEPTOR WELL
- BALL VALVE
- F/M — FLOW METER
- PUMP

NOTES

1. THE INTERCEPTOR WELL (IW) EXTRACTION SYSTEM CONSISTS OF CLUSTERS OF WELLS GROUPED INTO TWO UNITS. THE SOLID WASTE MANAGEMENT UNIT (SWMU) 1 CORRECTIVE ACTION SYSTEM, COMPRISED OF THE WESTERN AND NORTHERN CORRECTIVE ACTION SYSTEMS FOR THE SOUTH LANDFILL AND THE PLANT SITE CORRECTIVE ACTION SYSTEM; AND THE WASTE MANAGEMENT AREA (WMA) II SYSTEM LOCATED IN THE NORTHWEST PORTION OF THE PLANT SITE.

2. THE EXISTING SWMU I SYSTEM INCLUDES THE FOLLOWING INTERCEPTOR WELLS: IW-2, IW-5, IW-6, IW-7, IW-8, IW-10, IW-11, IW-12, IW-13, AND IW-14A. TWO NEW WELLS, IW-28 AND IW-29, WERE INCORPORATED IN THIS SYSTEM. AN ADDITIONAL WELL, IW-9, WAS NOT CONSIDERED PART OF THE SWMU I SYSTEM BUT CONTINUES TO FUNCTION AND IS INSPECTED AND MAINTAINED WITH THE OTHER SWMU I SYSTEM WELLS

3. THE EXISTING WMA II SYSTEM INCLUDES THE FOLLOWING INTERCEPTOR WELLS: IW-16, IW-17, IW-18, IW-19, IW-20, IW-21, IW-22, IW-23, IW-24, IW-25, AND DW-1. TWO NEW WELLS, IW-26 AND IW-27, WERE INCORPORATED IN THIS SYSTEM.

4. THE DISCHARGE FROM BASINS 5/6 INCLUDES PLANT PROCESS WASTEWATER WHICH IS PUMPED TO THE ANNISTON PUBLICLY OWNED TREATMENT WORKS (POTW) CONNECTION (SID PERMIT NO. IU 35 08 00048).

5. THE EXISTING TOTALIZING FLOW METER LOCATED AT IW-14A WAS REPLACED WITH A NEW METER THAT WILL TOTALIZE THE FLOW FROM IW-14A, IW-28 AND IW-29.

6. FLOWS FROM IW-26 AND IW-27 DIRECTED TO A TEMPORARY ABOVE GROUND STORAGE TANK. TANK CONTENTS HAULED TO LIFT STATION AS REQUIRED.

7. TWO TEMPORARY ABOVE GROUND STORAGE TANKS WERE INSTALLED AT THE SOUTH LANDFILL (FEBRUARY 2016). EFFLUENT FROM THE WELLS IS REDIRECTED TO THE STORAGE TANKS. THE TANKS' CONTENTS ARE HAULED TO THE LIFT STATION AS REQUIRED.

8. EXISTING INTERCEPTOR WELL SYSTEMS SHOWN TO INDICATE HOW THE NEW AND EXISTING SYSTEMS INTERACT.



12/22/2017

THESE RECORD DRAWINGS HAVE BEEN PREPARED BASED UPON INFORMATION FROM VARIOUS SOURCES. THESE SOURCES HAVE BEEN REFERENCED ON THE APPROPRIATE DRAWINGS.

REV	DATE	REVISION DESCRIPTION	DES	CADD	CHK	RVW

PROJECT

PHARMACIA LLC / SOLUTIA INC.
OPERABLE UNIT 3 REMEDIAL ACTION
ANNISTON PCB SITE, ALABAMA

TITLE

GROUNDWATER EXTRACTION SYSTEMS PROCESS FLOW DIAGRAM

Golder Associates

Solutia

PROJECT No. 1302962CQA.03

FILE No. 1302962CQA-019 RD-Interceptor Well System Process Flow Diagram

SCALE AS SHOWN

SHEET 19

G:\$Archive H\9433680 - Solutia\OU-3 RA Construction\AsBuilt\Record Drawings\1302962CQA-019 RD-Interceptor Well System Process Flow Diagram.dwg | Layout: 19 GWES FLOW DIAGRAM | Modified: amorales 12/18/2017 4:13 PM | Plotted: amorales 12/20/2017

APPENDIX C

MONTHLY PHOTO LOG

MONTHLY PHOTO LOG – AUGUST 2015

	
Autoclave Area - Compaction of DGA	Autoclave Area - Compaction of DGA
	
Autoclave Area – Setting out formwork	PCB Cells – Scarifying Subgrade
	
PCB Cells – Scarifying Subgrade	PCB Cells – Scarifying Subgrade

	
Borrow Area - Clearing	PCB Cells – Subgrade Preparation
	
PCB Cells – Subgrade Preparation	PCB Cells – Subgrade Preparation
	
PCB Cells – Subgrade Preparation	Borrow Area - BMPs

	
PCB Cells – Subgrade Preparation	PCB Cells – Check Dam

MONTHLY PHOTO LOG – SEPTEMBER 2015

	
Borrow Area – Preparation	Autoclave Area – Concrete Cover
	
Autoclave Area – Concrete Cover	Autoclave Area – Concrete Cover
	
Borrow Area – Preparation	Borrow Area – Preparation

	
Area E – Footing Excavation	Borrow Area – Preparation
	
Area E – Footing Excavation	Borrow Area – Excavation
	
Borrow Area – Sediment pond outlet	Borrow Area – Screened rock

	
PCB Cells – Subgrade placement	Borrow Area - Excavation
	
PCB Cells – Subgrade placement	Delivery of geomembrane
	
Area E – Footing formwork	PCB Cells – Subgrade placement

	
Borrow Area – Soil Handling	Area E – Footing and wall formwork
	
Area E – Footing and wall formwork	Borrow Area – Stormwater control channel

MONTHLY PHOTO LOG – OCTOBER 2015

	
Area E – Formwork and reinforcing steel	PCB Cells – Subgrade preparation
	
Area E – Formwork and reinforcing steel	PCB Cells – Soil placement
	
Delivery of geocomposite material	Area A - Formwork

	
PCB Cells – Soil placement	Area A – Reinforcing steel and concrete slab
	
PCB Cells – Soil placement	Borrow Area - stockpile
	
PCB Cells – Soil placement and grading	PCB Cells – Soil placement and grading

	
Area E – Formwork and reinforcing steel	Area A – Fencing Installation
	
PCB Cells – Geomembrane deployment	PCB Cells – Geomembrane deployment
	
PCB Cells – Geomembrane deployment	PCB Cells – Geomembrane seaming

	
Borrow Area - Excavation	PCB Cells – Geomembrane deployment
	
Areas C & D – Preliminary works	Areas C & D – Subgrade preparation
	
Area E – Retaining wall	PCB Cells – Geomembrane deployment

MONTHLY PHOTO LOG – NOVEMBER 2015

	
Areas C & D – Subgrade preparation	PCB Cells – Geomembrane deployment
	
Areas C & D – Geocell delivery	Area A – Fencing installation
	
Areas C & D – Subgrade improvement	Areas C & D – Geocell deployment

	
Area A – Concrete cover	Areas C & D – Geocell deployment
	
Borrow Area – Soil handling	PCB Cells – Cover soil placement
	
PCB Cells - Cover soil placement	Areas C & D – DGA placement

	
Area E – Retaining wall	PCB Cells - Cover soil placement
	
Areas C & D – DGA placement	PCB Cells - Cover soil placement
	
PCB Cells - Cover soil placement	PCB Cells - Cover soil placement

MONTHLY PHOTO LOG – DECEMBER 2015

	
Areas C & D – Geocell placement	Borrow Area – Excavation and Screening
	
Areas C & D	Areas C & D – Geocell filling with DGA
	
PCB Cells – Cover soil placement	PCB Cells – Cover soil placement

	
PCB Cells – Cover soil placement	Area E – Retaining wall
	
PCB Cells – Topsoil placement	PCB Cells – Cover soil placement
	
PCB Cells – Cover soil placement	Areas C & D – Perimeter riprap armor placement

MONTHLY PHOTO LOG – JANUARY 2016

	
Areas C & D – Perimeter riprap armor	Area E – Footing and Wall reinforcing
	
PCB Cells – Southern portion	PCB Cells – Northern portion
	
Area E – Footing poured	PCB Cells – Prepared for grassing

	
PCB Cells - Hydroseeding	PCB Cells – Hydroseeded and Mulched
	
CTS #1 – Enclosure installed	CTS #1 - Enclosure installed
	
CTS #1 – Piping and conduit installed	Areas C & D – Perimeter riprap installation

MONTHLY PHOTO LOG – FEBRUARY 2016

	
PCB Cells – Hydroseeded and topsoil placement	Borrow Area - Excavation
	
Area A – Vault Construction	PCB Cells – Cover soil placement
	
PCB Cells – Cover soil placement complete	Borrow Area – Screening and handling

	
PCB Cells – Emerging growth	PCB Cells – Riprap placement
	
PCB Cells - Emerging growth	PCB Cells – Turn-around

MONTHLY PHOTO LOG – MARCH 2016

	
Area A – Subgrade Preparation	Area A – Concrete Slab
	
Area A – Concrete Slab	Area A – Subgrade Preparation
	
Area A – Subgrade Preparation	Area A – Eastern Vault

	
Area A – Vault	Area A – Subgrade Preparation
	
Area A – Finish Grading	Area A – Liner placement
	
Area A – Liner placement around vaults	Area A – Liner placement

	
Area A – Liner installation	Area E – Liner placement
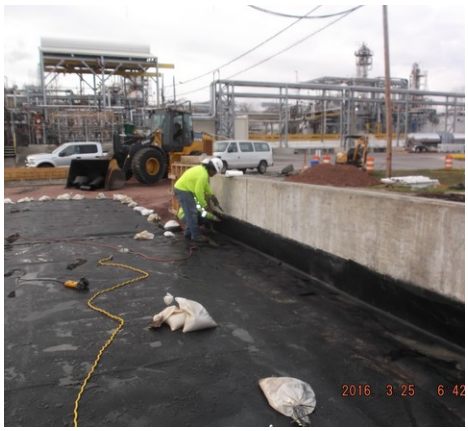	
Area E – Liner installation	Area E – Liner installation
	
Area E – Liner installation	Area A – Directional bore for conveyance lines

	
Area A – Boot for liner penetration	Area A – Soil cover placement

MONTHLY PHOTO LOG – APRIL 2016

	
Area A – Liner placement	Area E – Soil cover placement
	
Borrow Area – Soil stockpiles	Area E – Perimeter drainage installation
	
Area E – Perimeter drainage installation	Area E – Perimeter drainage installation

	
Area E – Sod installation	Area A – Conveyance Lines to CTS #2

MONTHLY PHOTO LOG – MAY 2016

	
Area A – Topsoil placement	Area E – Liner installation (SW corner)
	
Area E – Liner installation (SW corner)	Area A – Soil cover placement
	
Area A – Perimeter riprap and hydroseeding	Area A –Hydroseeded and mulched

	
CTS #2 Delivery	CTS #2 Delivery and Installation
	
CTS #2 Installation	Area H – Preparation for concrete cover
	
Borrow Area – Soil stockpiles	

MONTHLY PHOTO LOG – JUNE 2016

	
Borrow Area Restoration	Borrow Area Restoration
	
Borrow Area Restoration	

MONTHLY PHOTO LOG – JULY 2016

	
Borrow Area Restoration	Borrow Area Restoration
	
Borrow Area Restoration	Borrow Area Restoration

MONTHLY PHOTO LOG – AUGUST 2016

	
Area A – Curb Excavation	Areas C & D – Surface Water Drainage Improvements
	
Area A – Concrete Curb Addition	

MONTHLY PHOTO LOG – SEPTEMBER 2016

	
Conveyance line installation north of Area A	Area A – Sod Installation

MONTHLY PHOTO LOG – DECEMBER 2016

	
Area E Control Room Slab	Area E Control Room Slab
	
Area E Control Room Slab	Area E Control Room Slab

APPENDIX D

WASTE MANIFESTS

APPENDIX D1

Hazardous Waste Manifests

Hazardous Waste Manifest Tracking

Manifest Number	*Soil Origin*	*Weight (tons)*
2734145	Area A	11.29
2734157	Area A	11.22
2734158	Area A	9.62
2734161	Area A	14.58
2916275	Area A	13.99
2916276	Area A	16.38
2916277	Area A	11.27
2916278	Area A	12.67
2916279	Area A	17.18
2916290	Area A	12.78
3151395	Area A	17.8
3151396	Area A	9.76
3151397	Area A	9.86
3151398	Area A	17.74
	Area A Subtotal	**186.14**
2734144	Area A and Area E	17.28
	Area A and Area E Subtotal	**17.28**
2734151	Area E	5.93
2734168	Area E	10.9
2734169	Area E	4.86
2734170	Area E	11.74
2734173	Area E	12.92
2734176	Area E	7.06
2916280	Area E	13.25
	Area E Subtotal	**66.66**
2916272	Area H	2.17
	Area H Subtotal	**2.17**
2734149	Areas C & D	15.91
2734153	Areas C & D	12.78
2734154	Areas C & D	13.37
2916289	Areas C & D	16.53
	Areas C & D Subtotal	**58.59**
2666515	Autoclave	16.61
2666516	Autoclave	17.52
2666517	Autoclave	17.36
2666518	Autoclave	14.52
2666519	Autoclave	10.35
2666521	Autoclave	11.67
2666522	Autoclave	16.2
2666523	Autoclave	20.22
2666524	Autoclave	13.86
2666525	Autoclave	12.98
2666526	Autoclave	15.92
2666527	Autoclave	13.1
2734171	Autoclave	15.57
2734172	Autoclave	17.25

Hazardous Waste Manifest Tracking

Manifest Number	*Soil Origin*	*Weight (tons)*
2734174	Autoclave	15.7
2734177	Autoclave	14.47
2734178	Autoclave	15.39
2734180	Autoclave	16.62
2734181	Autoclave	16.69
2734182	Autoclave	13.52
2734183	Autoclave	14.08
2734184	Autoclave	14.3
2734185	Autoclave	17.91
2734186	Autoclave	13.66
2734187	Autoclave	15.48
2734188	Autoclave	10.8
2734189	Autoclave	19.28
2734191	Autoclave	17.44
2734192	Autoclave	21.07
2734193	Autoclave	11.29
	Autoclave Subtotal	**460.83**
2374146	Groundwater Extraction Wells	12.77
2734147	Groundwater Extraction Wells	13.89
2734150	Groundwater Extraction Wells	13.46
2734152	Groundwater Extraction Wells	12.81
2734179	Groundwater Extraction Wells	17.21
2916269	Groundwater Extraction Wells	11.94
2916270	Groundwater Extraction Wells	7.39
2916271	Groundwater Extraction Wells	10.09
2916272	Groundwater Extraction Wells	5.94
2916274	Groundwater Extraction Wells	10
2916281	Groundwater Extraction Wells	7.78
2916282	Groundwater Extraction Wells	15.26
2916283	Groundwater Extraction Wells	14.77
2916284	Groundwater Extraction Wells	10.93
2916285	Groundwater Extraction Wells	10.43
2916286	Groundwater Extraction Wells	13.79
2916287	Groundwater Extraction Wells	18.07
2916291	Groundwater Extraction Wells	16.68
2916292	Groundwater Extraction Wells	8.76
	Groundwater Wells Subtotal	**231.97**
2734148	Miscellaneous	14.26
2734155	Miscellaneous	13.77
2734159	Miscellaneous	11.81
2734160	Miscellaneous	11.25
2734162	Miscellaneous	9
2734163	Miscellaneous	13.34
2734164	Miscellaneous	12.02
2734165	Miscellaneous	19.46
2734166	Miscellaneous	12.38

Hazardous Waste Manifest Tracking

Manifest Number	*Soil Origin*	*Weight (tons)*
2734167	Miscellaneous	7.89
2916268	Miscellaneous	20.23
2916288	Miscellaneous	12.64
	Miscellaneous Subtotal	**158.05**
2666520	PCB Cells	13.38
2734175	PCB Cells	7.89
	PCB Cells Subtotal	**21.27**

	PROJECT TOTAL	**1202.96**

APPENDIX D1.1

Area A

Please print or type. (Form designed for use on elite (12-pitch) typewriter.)

Form Approved. OMB No. 2050-0039

UNIFORM HAZARDOUS WASTE MANIFEST

1. Generator ID Number	2. Page 1 of	3. Emergency Response Phone	4. Manifest Tracking Number
EXEMPT	1		002734145 GBF

GENERATOR

5. Generator's Name and Mailing Address
SOLUTIA, INC - ANNISTON PCB SITE
702 CLYDESDALE AVE
ANNISTON AL 36201
Generator's Phone: (256)237-1182

Generator's Site Address (if different than mailing address)

6. Transporter 1 Company Name — U.S. EPA ID Number

7. Transporter 2 Company Name — U.S. EPA ID Number

8. Designated Facility Name and Site Address
CHEMICAL WASTE MANAGEMENT, INC.
HIGHWAY 17 NORTH, MILE MARKER 163
EMELLE AL 35459
Facility's Phone: (205)652-9721

U.S. EPA ID Number
ALD000622464

9a. HM	9b. U.S. DOT Description (including Proper Shipping Name, Hazard Class, ID Number, and Packing Group (if any))	10. Containers No.	10. Containers Type	11. Total Quantity	12. Unit Wt./Vol.	13. Waste Codes
X	1. UN3432,RQ,POLYCHLORINATED BIPHENYLS,SOLID,II CM3879	001	DT	18000	K	
	2.					
	3.					
	4.					

14. Special Handling Instructions and Additional Information
1. CM3879 ERG-171 POM 12/3/1986 MDL 11/12/15
ERI PROVIDER: CHEMTREC (CONTRACT CON4417)

15. **GENERATOR'S/OFFEROR'S CERTIFICATION:** I hereby declare that the contents of this consignment are fully and accurately described above by the proper shipping name, and are classified, packaged, marked and labeled/placarded, and are in all respects in proper condition for transport according to applicable international and national governmental regulations. If export shipment and I am the Primary Exporter, I certify that the contents of this consignment conform to the terms of the attached EPA Acknowledgment of Consent.
I certify that the waste minimization statement identified in 40 CFR 262.27(a) (if I am a large quantity generator) or (b) (if I am a small quantity generator) is true.

Generator's/Offeror's Printed/Typed Name: RONN WILLIAMS — Signature — Month 12 Day 7 Year 15

INT'L

16. International Shipments ☐ Import to U.S. ☐ Export from U.S. Port of entry/exit:
Transporter signature (for exports only): Date leaving U.S.:

TRANSPORTER

17. Transporter Acknowledgment of Receipt of Materials

Transporter 1 Printed/Typed Name — Signature — Month Day Year

Transporter 2 Printed/Typed Name — Signature — Month Day Year

DESIGNATED FACILITY

18. Discrepancy

18a. Discrepancy Indication Space ☐ Quantity ☐ Type ☐ Residue ☐ Partial Rejection ☐ Full Rejection

Manifest Reference Number:

18b. Alternate Facility (or Generator) — U.S. EPA ID Number

Facility's Phone:

18c. Signature of Alternate Facility (or Generator) — Month Day Year

19. Hazardous Waste Report Management Method Codes (i.e., codes for hazardous waste treatment, disposal, and recycling systems)

1.	2.	3.	4.

20. Designated Facility Owner or Operator: Certification of receipt of hazardous materials covered by the manifest except as noted in Item 18a

Printed/Typed Name — Signature — Month Day Year

EPA Form 8700-22 (Rev. 3-05) Previous editions are obsolete.

GENERATOR'S INITIAL COPY

CWMI

Please print or type. (Form designed for use on elite (12-pitch) typewriter.) Form Approved. OMB No. 2050-0039

UNIFORM HAZARDOUS WASTE MANIFEST

1. Generator ID Number	2. Page 1 of	3. Emergency Response Phone	4. Manifest Tracking Number
EXEMPT	1		002734157 GBF

GENERATOR

5. Generator's Name and Mailing Address
SOLUTIA, INC - ANNISTON PCB SITE
702 CLYDESDALE AVE
ANNISTON AL 36201
Generator's Phone: (256)307-1187

Generator's Site Address (if different than mailing address)

6. Transporter 1 Company Name
RD Wood

U.S. EPA ID Number

7. Transporter 2 Company Name

U.S. EPA ID Number

8. Designated Facility Name and Site Address
CHEMICAL WASTE MANAGEMENT, INC.
HIGHWAY 17 NORTH, MILE MARKER 163
EMELLE AL 35459
Facility's Phone: (205)652-9721

U.S. EPA ID Number
ALD000622464

9a. HM	9b. U.S. DOT Description (including Proper Shipping Name, Hazard Class, ID Number, and Packing Group (if any))	10. Containers No.	10. Containers Type	11. Total Quantity	12. Unit Wt./Vol.	13. Waste Codes
X	1. UN3432,RQ,POLYCHLORINATED BIPHENYLS,SOLID,9,III CM9879	001	DT	18000	K	
	2.					
	3.					
	4.					

14. Special Handling Instructions and Additional Information
1. CM9879 ERG-171 POE: 42578116 OSD: 12-15-2015
ERI PROVIDER: CHEMTREC (CONTRACT CCN24117)

15. GENERATOR'S/OFFEROR'S CERTIFICATION: I hereby declare that the contents of this consignment are fully and accurately described above by the proper shipping name, and are classified, packaged, marked and labeled/placarded, and are in all respects in proper condition for transport according to applicable international and national governmental regulations. If export shipment and I am the Primary Exporter, I certify that the contents of this consignment conform to the terms of the attached EPA Acknowledgment of Consent.
I certify that the waste minimization statement identified in 40 CFR 262.27(a) (if I am a large quantity generator) or (b) (if I am a small quantity generator) is true.

Generator's/Offeror's Printed/Typed Name: DONN WILLIAMS — Signature — Month 12 Day 15 Year 15

INT'L

16. International Shipments ☐ Import to U.S. ☐ Export from U.S. Port of entry/exit:
Transporter signature (for exports only): Date leaving U.S.:

TRANSPORTER

17. Transporter Acknowledgment of Receipt of Materials

Transporter 1 Printed/Typed Name: Mike Foster — Signature — Month 12 Day 15 Year 15

Transporter 2 Printed/Typed Name — Signature — Month Day Year

DESIGNATED FACILITY

18. Discrepancy

18a. Discrepancy Indication Space ☐ Quantity ☐ Type ☐ Residue ☐ Partial Rejection ☐ Full Rejection

Manifest Reference Number:

18b. Alternate Facility (or Generator) U.S. EPA ID Number

Facility's Phone:

18c. Signature of Alternate Facility (or Generator) Month Day Year

19. Hazardous Waste Report Management Method Codes (i.e., codes for hazardous waste treatment, disposal, and recycling systems)

1.	2.	3.	4.

20. Designated Facility Owner or Operator: Certification of receipt of hazardous materials covered by the manifest except as noted in Item 18a

Printed/Typed Name — Signature — Month Day Year

EPA Form 8700-22 (Rev. 3-05) Previous editions are obsolete.

GENERATOR'S INITIAL COPY

WM
Chemical Waste Managment
P.O. Box 55
36964 Alabama Hwy 17
Emelle, AL 35459-0055
(205)652-9721

Manifest Document Number:

SOLUTIA INC
702 CLYDESDALE AVE

ANNISTON, AL 36201-5328

Attn: DONN WILLIAMS

Site Information

SOLUTIA
702 CLYDESDALE AVE

ANNISTON, AL 36201-5328

CERTIFICATE OF DISPOSAL

Chemical Waste Management, Inc. (ALD000622464) has received PCB material from
SOLUTIA

as described on Hazardous Waste Manifest Number 002734157GBF-1
Waste Management, Inc. hereby certifies that the above described material (excluding PCB liquids, if applicable) was landfilled on the dates shown below, in compliance with State and Federal Regulations.

Under civil and criminal penalties of law for the making or submission of false or fraudulent statements or representation (18 U.S.C. 1001 and 15 U.S.C. 2615), I certify that the information contained in or accompanying this document is true, accurate and complete. As to the identified section(s) of this document for which I cannot personally verify truth and accuracy, I certify as the company official having supervisory responsibility for the persons who, acting under my direct instructions, made the verification that this information is true, accurate and complete.

Al Talbott/cm

Al Talbott, Safety Manager
December 19, 2015

OSD	Unique ID	Cont #	Profile	Disposed	Description
12/15/15	002734157GBF-01	1	CM9879	12/16/15	ANNISTON PCB SITE CONSENT DECR

box 6008 Ld # 1200705 CWMI

Please print or type. (Form designed for use on elite (12-pitch) typewriter.) Form Approved. OMB No. 2050-0039

UNIFORM HAZARDOUS WASTE MANIFEST	1. Generator ID Number	2. Page 1 of	3. Emergency Response Phone	4. Manifest Tracking Number
	EXEMPT	1	770-337-4689	002734158 GBF

GENERATOR

5. Generator's Name and Mailing Address
SOLUTIA, INC - ANNISTON PCB SITE
702 CLYDESDALE AVE
ANNISTON AL 36201
Generator's Phone: (601)607-1187

Generator's Site Address (if different than mailing address)

6. Transporter 1 Company Name: Robbie D. Ward Inc — U.S. EPA ID Number: ALD067138891

7. Transporter 2 Company Name — U.S. EPA ID Number

8. Designated Facility Name and Site Address
CHEMICAL WASTE MANAGEMENT, INC.
HIGHWAY 17 NORTH, MILE MARKER 163
EMELLE AL 35459
Facility's Phone: (205)652-9721 — U.S. EPA ID Number: ALD000622464

9a. HM	9b. U.S. DOT Description (including Proper Shipping Name, Hazard Class, ID Number, and Packing Group (if any))	10 Containers No.	10 Containers Type	11 Total Quantity	12. Unit Wt./Vol.	13. Waste Codes
X	1. UN3432,RQ,POLYCHLORINATED BIPHENYLS,SOLID,9,III CM9879	001	~~DT~~ CM	8727 ~~18000~~ JB	K	
	2.					
	3.					
	4.					

14. Special Handling Instructions and Additional Information
1. CM9879 ERG-171 PO#: 4255866 OSD: 10/27/15 Box 6008 Area A Slab
ERI PROVIDER: CHEMTREC (CONTRACT CCN24117)

15. GENERATOR'S/OFFEROR'S CERTIFICATION: I hereby declare that the contents of this consignment are fully and accurately described above by the proper shipping name, and are classified, packaged, marked and labeled/placarded, and are in all respects in proper condition for transport according to applicable international and national governmental regulations. If export shipment and I am the Primary Exporter, I certify that the contents of this consignment conform to the terms of the attached EPA Acknowledgment of Consent.
I certify that the waste minimization statement identified in 40 CFR 262.27(a) (if I am a large quantity generator) or (b) (if I am a small quantity generator) is true.

Generator's/Offeror's Printed/Typed Name: DONN WILLIAMS — Signature: DWilliams — Month: 10 Day: 27 Year: 15

INTL

16. International Shipments ☐ Import to U.S. ☐ Export from U.S. Port of entry/exit:
Transporter signature (for exports only): Date leaving U.S.

TRANSPORTER

17. Transporter Acknowledgment of Receipt of Materials

Transporter 1 Printed/Typed Name: Donald L Malone Jr — Signature: Donald L Malone — Month: 10 Day: 27 Year: 15

Transporter 2 Printed/Typed Name — Signature — Month Day Year

DESIGNATED FACILITY

18. Discrepancy

18a. Discrepancy Indication Space ☒ Quantity ☐ Type ☐ Residue ☐ Partial Rejection ☐ Full Rejection

Correct to recvd kg wt per Donn Williams JB 11/6/15 Manifest Reference Number:

18b. Alternate Facility (or Generator) — U.S. EPA ID Number

Facility's Phone:

18c. Signature of Alternate Facility (or Generator) — Month Day Year

19. Hazardous Waste Report Management Method Codes (i.e., codes for hazardous waste treatment, disposal, and recycling systems)

1.	2.	3.	4.
H132			

20. Designated Facility Owner or Operator: Certification of receipt of hazardous materials covered by the manifest except as noted in Item 18a

Printed/Typed Name: Mal Alexander — Signature: Mal Alexander — Month: 11 Day: 6 Year: 15

EPA Form 8700-22 (Rev. 3-05) Previous editions are obsolete.

DESIGNATED FACILITY TO DESTINATION STATE (IF REQUIRED)

11

k28

CWM, INC. - EMELLE ***** Receipt # 509912 ***** GROSS 54580 lb Page - 1

Date/Time In 11/06/15 11:54 02:53PM 12/04/2015
Load Type Rolloff Federal EPA ID ALD067138891
Transporter ROBBIE D WOOD INC
DOLOMITE AL

** WEIGHT SUMMARY **
Gross 54580.00
Tare .00
Net 35340.00
Adj. .00
Adj. Net 19340.00

Truck Number 204 Trailer/Contar #1 6008 #2 #3

Rcpt Ln#	Doc Ln#	Document Number	Profile Sales	Profile Invoicing Customer	Generator	Cat #	Cat Code	Total Quan.	W/V	DOS Units	PCB	Sched Cat	Federal EPA Waste Status	ADEM #
1	1	002734158GBF	CH9879	SOLUTIA		1	CH	18000.00	K	Kilogram	Y	PLFB	GC Undeterminable	073116-C007
				ANNISTON AL				SUBCC Value - NO						
	Doc Seq # 1		EME	SOLUTIA				P.O. Num						COD Req'd

>51% OR <51% DEBRIS (CIRCLE)
PREFILLED VAULT Y OR N (CIRCLE)
>51% OR <51% HAC 10% INSPECTION (CIRCLE)
BULK MATERIAL ONLY:
SAMPLED/INSPECTED_____ FREE LIQUIDS DETECTED? YES / NO
SELECT MATERIAL/NON-SELECT MATERIAL_____ WIND DISPERSAL MATERIAL? YES / NO

PHYSICAL DESCRIPTION OF WASTE:_____ SAMPLER/APPROVAL_____

SPOT SAMPLE:_____B15-_____ PHYS. DESCRIPTION_____
RAD.SCREEN POS NEG
IGN.SCREEN POS NEG
H20 SOL. S F PT/SOL
H20 RXN/TEMP. INITIAL NO RXN REACTS___
H20 RXN/TEMP. 5MIN. NO RXN REACTS
ph (PAPER)_____
CN SCREEN + - (PRUSSIAN BLUE)_ _ _
CN SCREEN + - (CYANTESMO)
SULFIDE SCREEN + -
ADDITIONAL ANALYTICAL REQ'D? Y N
DESCRIBE:_____
PCB CONC. (PPM)_____ SULFIDE (9030)_____
XH2O BY HF_____ CYANIDE (9010C)_____ TAB WASTE Y N
PAINT FILTER TEST/ P F SPEC. GRAVITY_____ BNZ CONC.____PPM
COMMENTS:(SAFETY/OPERATIONAL)_____

COMPAT. TEST W/_____OK___RXN_

ADD'L SPOT SAMPLE ATTACHED? Y N
DISPOSAL METHOD: S SP ST-3 ST-3/PT P-ST-3 P-ST-3/PT ST-5 ST-5/PT P-ST-5 SOL-PTA B-PIN OTHER_____
P-ST-5/PT ST-8 ST-8/PT HIC HAC (HAC INSPECT) F INC SP-VS PCB-HAC P-HAC
P-ST-8 P-ST-8/PT VS-3 VS-5 VS-8
INDICATOR PARAMETER WILL BE CIRCLED
B-HAC LOADS REQUIRING INSPECTION THAT ARE FOUND TO BE LESS THAN 51% MUST
BE RETURNED TO LAB AND PLACED ON HOLD._____
RELEASED FOR DISPOSAL BY:_____DATE:_____

box # 6056 Ld # 1199856 CWMI

Please print or type. (Form designed for use on elite (12-pitch) typewriter.) Form Approved. OMB No. 2050-0039

UNIFORM HAZARDOUS WASTE MANIFEST

1. Generator ID Number: EXEMPT
2. Page 1 of 1
3. Emergency Response Phone: 770-[illegible]
4. Manifest Tracking Number: 002734161 GBF

5. Generator's Name and Mailing Address
SOLUTIA, INC - ANNISTON PCB SITE
702 CLYDESDALE AVE
ANNISTON AL 36201
Generator's Phone: (601)607-1187

Generator's Site Address (if different than mailing address)

6. Transporter 1 Company Name: Robbie D. Wood Inc
U.S. EPA ID Number: ALD067137891

7. Transporter 2 Company Name
U.S. EPA ID Number

8. Designated Facility Name and Site Address
CHEMICAL WASTE MANAGEMENT, INC.
HIGHWAY 17 NORTH, MILE MARKER 163
EMELLE AL 35459
Facility's Phone: (205)652-9721
U.S. EPA ID Number: ALD000622464

9a. HM	9b. U.S. DOT Description (including Proper Shipping Name, Hazard Class, ID Number, and Packing Group (if any))	10. Containers No.	Type	11. Total Quantity	12. Unit Wt./Vol.	13. Waste Codes
X	1. UN3432,RQ,POLYCHLORINATED BIPHENYLS,SOLID,9,III CM9879	001	DT	18000	K	
	2.					
	3.					
	4.					

14. Special Handling Instructions and Additional Information
1. CM9879 ERG-171 PO#: 42557866 OSD: 10/14/15 Box 6056 Area A
ERI PROVIDER: CHEMTREC (CONTRACT CCN24117)

15. GENERATOR'S/OFFEROR'S CERTIFICATION: I hereby declare that the contents of this consignment are fully and accurately described above by the proper shipping name, and are classified, packaged, marked and labeled/placarded, and are in all respects in proper condition for transport according to applicable international and national governmental regulations. If export shipment and I am the Primary Exporter, I certify that the contents of this consignment conform to the terms of the attached EPA Acknowledgment of Consent.
I certify that the waste minimization statement identified in 40 CFR 262.27(a) (if I am a large quantity generator) or (b) (if I am a small quantity generator) is true.

Generator's/Offeror's Printed/Typed Name: DONN WILLIAMS
Signature: D.W. Williams
Month 10 Day 14 Year 15

16. International Shipments ☐ Import to U.S. ☐ Export from U.S. Port of entry/exit:
Transporter signature (for exports only): Date leaving U.S.:

17. Transporter Acknowledgment of Receipt of Materials
Transporter 1 Printed/Typed Name: Donald L Malone II
Signature: Donald L Malone II
Month 10 Day 14 Year 15
Transporter 2 Printed/Typed Name
Signature
Month Day Year

18. Discrepancy
18a. Discrepancy Indication Space ☐ Quantity ☐ Type ☐ Residue ☐ Partial Rejection ☐ Full Rejection
Manifest Reference Number:

18b. Alternate Facility (or Generator)
U.S. EPA ID Number
Facility's Phone:

18c. Signature of Alternate Facility (or Generator)
Month Day Year

19. Hazardous Waste Report Management Method Codes (i.e., codes for hazardous waste treatment, disposal, and recycling systems)
1. 2. 3. 4.

20. Designated Facility Owner or Operator: Certification of receipt of hazardous materials covered by the manifest except as noted in Item 18a
Printed/Typed Name
Signature
Month Day Year

GENERATOR / INT'L / TRANSPORTER / DESIGNATED FACILITY

EPA Form 8700-22 (Rev. 3-05) Previous editions are obsolete.

GENERATOR'S INITIAL COPY

WM

Chemical Waste Managment
P.O. Box 55
36964 Alabama Hwy 17
Emelle, AL 35459-0055
(205)652-9721

Manifest Document Number:

SOLUTIA INC
702 CLYDESDALE AVE

ANNISTON, AL 36201-5328

Attn: DONN WILLIAMS

Site Information

SOLUTIA
702 CLYDESDALE AVE

ANNISTON, AL 36201-5328

CERTIFICATE OF DISPOSAL

Chemical Waste Management, Inc. (ALD000622464) has received PCB material from
SOLUTIA

as described on Hazardous Waste Manifest Number 002734161GBF-1
Waste Management, Inc. hereby certifies that the above described material (excluding PCB liquids, if applicable) was landfilled on the dates shown below, in compliance with State and Federal Regulations.

Under civil and criminal penalties of law for the making or submission of false or fraudulent statements or representation (18 U.S.C. 1001 and 15 U.S.C. 2615), I certify that the information contained in or accompanying this document is true, accurate and complete. As to the identified section(s) of this document for which I cannot personally verify truth and accuracy, I certify as the company official having supervisory responsibility for the persons who, acting under my direct instructions, made the verification that this information is true, accurate and complete.

Al Talbott/cm

Al Talbott, Safety Manager
October 28, 2015

OSD	Unique ID	Cont #	Profile	Disposed	Description
10/14/15	002734161GBF-01	1	CM9879	10/22/15	ANNISTON PCB SITE CONSENT DECR

Waste Management
Emelle Facility
WEIGHED ON CARDINAL SCALES

435735

GROSS 64720 lb
08:23AM 10/22/2015

GROSS 35560 lb
03:05PM 10/22/2015
29160

GROSS
TARE
NET

Customer: Soluția

13227K

Transporter: RMV

Truck #: 204 Trailer #: 6056

Receipt #: 509580 Manifest #: 002734161 GBF

DIGITAL WEIGHT INDICATOR & PRINTER
WEIGHED BY MM

FORM 510

CWMI

Please print or type. (Form designed for use on elite (12-pitch) typewriter.)

Form Approved. OMB No. 2050-0039

UNIFORM HAZARDOUS WASTE MANIFEST

1. Generator ID Number: EXEMPT
2. Page 1 of 1
3. Emergency Response Phone
4. Manifest Tracking Number: 002916275 GBF

5. Generator's Name and Mailing Address
SOLUTIA, INC - ANNISTON PCB SITE
702 CLYDESDALE AVE
ANNISTON AL 36201
Generator's Phone: (601)807-1187

Generator's Site Address (if different than mailing address)
ANNISTON PCB SITE
0 PARKWIN
ANNISTON AL 36201

6. Transporter 1 Company Name: Robbie D Wood
U.S. EPA ID Number: ALD067138891

7. Transporter 2 Company Name
U.S. EPA ID Number

8. Designated Facility Name and Site Address
CHEMICAL WASTE MANAGEMENT, INC.
HIGHWAY 17 NORTH, MILE MARKER 163
EMELLE AL 35459
Facility's Phone: (205)652-9721
U.S. EPA ID Number: ALD000622464

9a. HM	9b. U.S. DOT Description (including Proper Shipping Name, Hazard Class, ID Number, and Packing Group (if any))	10. Containers No.	Type	11. Total Quantity	12. Unit Wt./Vol.	13. Waste Codes
X	1. UN3432,RQ,POLYCHLORINATED BIPHENYLS,SOLID,9,III CM9879	001	CM	18000	K	
	2.					
	3. Shipped Back Can # 871 Full					
	4.					

14. Special Handling Instructions and Additional Information
1. CM9879 ERG-171 PO#: 42557866 OSD: 8-19-16
ERI PROVIDER: CHEMTREC (CONTRACT CCN24117)

15. **GENERATOR'S/OFFEROR'S CERTIFICATION:** I hereby declare that the contents of this consignment are fully and accurately described above by the proper shipping name, and are classified, packaged, marked and labeled/placarded, and are in all respects in proper condition for transport according to applicable international and national governmental regulations. If export shipment and I am the Primary Exporter, I certify that the contents of this consignment conform to the terms of the attached EPA Acknowledgment of Consent.
I certify that the waste minimization statement identified in 40 CFR 262.27(a) (if I am a large quantity generator) or (b) (if I am a small quantity generator) is true.

Generator's/Offeror's Printed/Typed Name: DONN WILLIAMS
Signature: [signature]
Month 8 Day 22 Year 16

16. International Shipments ☐ Import to U.S. ☐ Export from U.S. Port of entry/exit:
Transporter signature (for exports only): Date leaving U.S.:

17. Transporter Acknowledgment of Receipt of Materials
Transporter 1 Printed/Typed Name: Randy Gunter
Signature: [signature]
Month 8 Day 22 Year 16
Transporter 2 Printed/Typed Name
Signature
Month Day Year

18. Discrepancy
18a. Discrepancy Indication Space ☐ Quantity ☐ Type ☐ Residue ☐ Partial Rejection ☐ Full Rejection
Manifest Reference Number:

18b. Alternate Facility (or Generator)
U.S. EPA ID Number
Facility's Phone:

18c. Signature of Alternate Facility (or Generator)
Month Day Year

19. Hazardous Waste Report Management Method Codes (i.e., codes for hazardous waste treatment, disposal, and recycling systems)
1. 2. 3. 4.

20. Designated Facility Owner or Operator: Certification of receipt of hazardous materials covered by the manifest except as noted in Item 18a
Printed/Typed Name
Signature
Month Day Year

GENERATOR / INT'L / TRANSPORTER / DESIGNATED FACILITY

EPA Form 8700-22 (Rev. 3-05) Previous editions are obsolete.

GENERATOR'S INITIAL COPY

Box # 2571

CWMI

Please print or type. (Form designed for use on elite (12-pitch) typewriter.)

Form Approved. OMB No. 2050-0039

UNIFORM HAZARDOUS WASTE MANIFEST

1. Generator ID Number: EXEMPT

2. Page 1 of 1

3. Emergency Response Phone

4. Manifest Tracking Number: 002916276 GBF

5. Generator's Name and Mailing Address
SOLUTIA, INC - ANNISTON PCB SITE
702 CLYDESDALE AVE
ANNISTON AL 36201
Generator's Phone: (601)807-1187

Generator's Site Address (if different than mailing address)
ANNISTON PCB SITE
0 PARKWIN
ANNISTON AL 36201

6. Transporter 1 Company Name: Robbie D Woods
U.S. EPA ID Number: ALD067138895

7. Transporter 2 Company Name
U.S. EPA ID Number

8. Designated Facility Name and Site Address
CHEMICAL WASTE MANAGEMENT, INC.
HIGHWAY 17 NORTH, MILE MARKER 163
EMELLE AL 35459
Facility's Phone: (205)652-9721
U.S. EPA ID Number: ALD000622464

9a. HM	9b. U.S. DOT Description (including Proper Shipping Name, Hazard Class, ID Number, and Packing Group (if any))	10. Containers No.	10. Containers Type	11. Total Quantity	12. Unit Wt./Vol.	13. Waste Codes
X	1. UN3432,RQ,POLYCHLORINATED BIPHENYLS,SOLID,9,III CM9879	001	CM	18000	K	
	2.					
	3. Shipp'd Back Can # 2577 full					
	4. (Plant Can)					

14. Special Handling Instructions and Additional Information
1. CM9879 ERG-171 PO#: 4255786 OSD: 8-19-16
ERI PROVIDER: CHEMTREC (CONTRACT CCN24117)

15. **GENERATOR'S/OFFEROR'S CERTIFICATION:** I hereby declare that the contents of this consignment are fully and accurately described above by the proper shipping name, and are classified, packaged, marked and labeled/placarded, and are in all respects in proper condition for transport according to applicable international and national governmental regulations. If export shipment and I am the Primary Exporter, I certify that the contents of this consignment conform to the terms of the attached EPA Acknowledgment of Consent.
I certify that the waste minimization statement identified in 40 CFR 262.27(a) (if I am a large quantity generator) or (b) (if I am a small quantity generator) is true.

Generator's/Offeror's Printed/Typed Name: DONN WILLIAMS
Signature: DW. Williams
Month: 8 Day: 22 Year: 16

INT'L

16. International Shipments ☐ Import to U.S. ☐ Export from U.S. Port of entry/exit:
Transporter signature (for exports only): Date leaving U.S.:

TRANSPORTER

17. Transporter Acknowledgment of Receipt of Materials

Transporter 1 Printed/Typed Name: Charles McCullar
Signature: Charles McCullar
Month: 08 Day: 22 Year: 16

Transporter 2 Printed/Typed Name
Signature
Month Day Year

DESIGNATED FACILITY

18. Discrepancy

18a. Discrepancy Indication Space ☐ Quantity ☐ Type ☐ Residue ☐ Partial Rejection ☐ Full Rejection

Manifest Reference Number:

18b. Alternate Facility (or Generator)
U.S. EPA ID Number
Facility's Phone:

18c. Signature of Alternate Facility (or Generator)
Month Day Year

19. Hazardous Waste Report Management Method Codes (i.e., codes for hazardous waste treatment, disposal, and recycling systems)

1.	2.	3.	4.

20. Designated Facility Owner or Operator: Certification of receipt of hazardous materials covered by the manifest except as noted in Item 18a

Printed/Typed Name
Signature
Month Day Year

EPA Form 8700-22 (Rev. 3-05) Previous editions are obsolete.

GENERATOR'S INITIAL COPY

CWMI

Please print or type. (Form designed for use on elite (12-pitch) typewriter.)

Form Approved. OMB No. 2050-0039

UNIFORM HAZARDOUS WASTE MANIFEST

1. Generator ID Number: EXEMPT
2. Page 1 of: 1
3. Emergency Response Phone:
4. Manifest Tracking Number: 002916277 GBF

GENERATOR

5. Generator's Name and Mailing Address
SOLUTIA, INC - ANNISTON PCB SITE
702 CLYDESDALE AVE
ANNISTON AL 36201
Generator's Phone: (601)607-1187

Generator's Site Address (if different than mailing address)
ANNISTON PCB SITE
0 PARKWIN
ANNISTON AL 36201

6. Transporter 1 Company Name: Robbie D Woods
U.S. EPA ID Number: X

7. Transporter 2 Company Name
U.S. EPA ID Number:

8. Designated Facility Name and Site Address
CHEMICAL WASTE MANAGEMENT, INC.
HIGHWAY 17 NORTH, MILE MARKER 163
EMELLE AL 35459
Facility's Phone: (205)652-9721
U.S. EPA ID Number: ALD000622464

9a. HM	9b. U.S. DOT Description (including Proper Shipping Name, Hazard Class, ID Number, and Packing Group (if any))	10. Containers No.	10. Containers Type	11. Total Quantity	12. Unit Wt./Vol.	13. Waste Codes
X	1. UN3432,RQ,POLYCHLORINATED BIPHENYLS,SOLID,9,III CM9879	001	CM	18000	K	
	2.					
	3. Shipped out 25217					
	4.					

14. Special Handling Instructions and Additional Information
1. CM9879 ERG-171 PO#: 4255786 OSD: 8/23/16
ERI PROVIDER: CHEMTREC (CONTRACT CCN24117)

15. **GENERATOR'S/OFFEROR'S CERTIFICATION:** I hereby declare that the contents of this consignment are fully and accurately described above by the proper shipping name, and are classified, packaged, marked and labeled/placarded, and are in all respects in proper condition for transport according to applicable international and national governmental regulations. If export shipment and I am the Primary Exporter, I certify that the contents of this consignment conform to the terms of the attached EPA Acknowledgment of Consent.
I certify that the waste minimization statement identified in 40 CFR 262.27(a) (if I am a large quantity generator) or (b) (if I am a small quantity generator) is true.

Generator's/Offeror's Printed/Typed Name: DONN WILLIAMS
Signature: D Williams
Month: 8 Day: 23 Year: 16

INT'L

16. International Shipments ☐ Import to U.S. ☐ Export from U.S. Port of entry/exit:
Transporter signature (for exports only): Date leaving U.S.:

TRANSPORTER

17. Transporter Acknowledgment of Receipt of Materials

Transporter 1 Printed/Typed Name: Michael Cunningham
Signature: Michael Cunningham
Month: 8 Day: 23 Year: 16

Transporter 2 Printed/Typed Name
Signature
Month Day Year

DESIGNATED FACILITY

18. Discrepancy

18a. Discrepancy Indication Space ☐ Quantity ☐ Type ☐ Residue ☐ Partial Rejection ☐ Full Rejection

Manifest Reference Number:

18b. Alternate Facility (or Generator)
U.S. EPA ID Number
Facility's Phone:

18c. Signature of Alternate Facility (or Generator)
Month Day Year

19. Hazardous Waste Report Management Method Codes (i.e., codes for hazardous waste treatment, disposal, and recycling systems)

1.	2.	3.	4.

20. Designated Facility Owner or Operator: Certification of receipt of hazardous materials covered by the manifest except as noted in Item 18a

Printed/Typed Name
Signature
Month Day Year

EPA Form 8700-22 (Rev. 3-05) Previous editions are obsolete.

GENERATOR'S INITIAL COPY

BOX # 12178 Box # 25228 Load # 019878

CWMI

Please print or type. (Form designed for use on elite (12-pitch) typewriter.)

Form Approved. OMB No. 2050-0039

UNIFORM HAZARDOUS WASTE MANIFEST

1. Generator ID Number: EXEMPT
2. Page 1 of
3. Emergency Response Phone
4. Manifest Tracking Number: 002916278 GBF

5. Generator's Name and Mailing Address
SOLUTIA, INC - ANNISTON PCB SITE
702 CLYDESDALE AVE
ANNISTON AL 36201
Generator's Phone: (601)807-1187

Generator's Site Address (if different than mailing address)
ANNISTON PCB SITE
0 PARKWIN
ANNISTON AL 36201

6. Transporter 1 Company Name: Robbie D Woods Inc
U.S. EPA ID Number: ALD067138891

7. Transporter 2 Company Name
U.S. EPA ID Number

8. Designated Facility Name and Site Address
CHEMICAL WASTE MANAGEMENT, INC.
HIGHWAY 17 NORTH, MILE MARKER 163
EMELLE AL 35459
Facility's Phone: (205)652-9721
U.S. EPA ID Number: ALD000622464

9a. HM	9b. U.S. DOT Description (including Proper Shipping Name, Hazard Class, ID Number, and Packing Group (if any))	10. Containers No.	Type	11. Total Quantity	12. Unit Wt./Vol.	13. Waste Codes
X	1. UN3432,RQ,POLYCHLORINATED BIPHENYLS,SOLID,9,III CM9879	001	CM	18000	K	
	2.					
	3. Can out 25228					
	4.					

14. Special Handling Instructions and Additional Information
1. CM9879 ERG-171 PO#: 425667866 OSD: 8-26-16
ERI PROVIDER: CHEMTREC (CONTRACT CCN24117)

15. **GENERATOR'S/OFFEROR'S CERTIFICATION:** I hereby declare that the contents of this consignment are fully and accurately described above by the proper shipping name, and are classified, packaged, marked and labeled/placarded, and are in all respects in proper condition for transport according to applicable international and national governmental regulations. If export shipment and I am the Primary Exporter, I certify that the contents of this consignment conform to the terms of the attached EPA Acknowledgment of Consent.
I certify that the waste minimization statement identified in 40 CFR 262.27(a) (if I am a large quantity generator) or (b) (if I am a small quantity generator) is true.

Generator's/Offeror's Printed/Typed Name: DONN WILLIAMS
Signature: D Williams
Month 08 Day 29 Year 16

16. International Shipments ☐ Import to U.S. ☐ Export from U.S. Port of entry/exit:
Transporter signature (for exports only): Date leaving U.S.:

17. Transporter Acknowledgment of Receipt of Materials
Transporter 1 Printed/Typed Name: William M Woods JR
Signature: William M Woods
Month 08 Day 29 Year 16
Transporter 2 Printed/Typed Name
Signature
Month Day Year

18. Discrepancy
18a. Discrepancy Indication Space ☐ Quantity ☐ Type ☐ Residue ☐ Partial Rejection ☐ Full Rejection
Manifest Reference Number:
18b. Alternate Facility (or Generator)
U.S. EPA ID Number
Facility's Phone:
18c. Signature of Alternate Facility (or Generator)
Month Day Year

19. Hazardous Waste Report Management Method Codes (i.e., codes for hazardous waste treatment, disposal, and recycling systems)
1. 2. 3. 4.

20. Designated Facility Owner or Operator: Certification of receipt of hazardous materials covered by the manifest except as noted in Item 18a
Printed/Typed Name
Signature
Month Day Year

GENERATOR

INT'L

TRANSPORTER

DESIGNATED FACILITY

EPA Form 8700-22 (Rev. 3-05) Previous editions are obsolete.

GENERATOR'S INITIAL COPY

CWMI

Please print or type. (Form designed for use on elite (12-pitch) typewriter.)

Form Approved. OMB No. 2050-0039

UNIFORM HAZARDOUS WASTE MANIFEST

1. Generator ID Number: EXEMPT
2. Page 1 of 1
3. Emergency Response Phone
4. Manifest Tracking Number: 002916279 GBF

5. Generator's Name and Mailing Address
SOLUTIA, INC - ANNISTON PCB SITE
702 CLYDESDALE AVE
ANNISTON AL 36201
Generator's Phone: (601)607-1187

Generator's Site Address (if different than mailing address)
ANNISTON PCB SITE
0 PARKWIN
ANNISTON AL 36201

6. Transporter 1 Company Name: Robtic D Woods
U.S. EPA ID Number: X067122291

7. Transporter 2 Company Name
U.S. EPA ID Number

8. Designated Facility Name and Site Address
CHEMICAL WASTE MANAGEMENT, INC.
HIGHWAY 17 NORTH, MILE MARKER 163
EMELLE AL 35459
Facility's Phone: (205)652-9721
U.S. EPA ID Number: ALD000622464

9a. HM	9b. U.S. DOT Description (including Proper Shipping Name, Hazard Class, ID Number, and Packing Group (if any))	10. Containers No.	Type	11. Total Quantity	12. Unit Wt./Vol.	13. Waste Codes
X	1. UN3432,RQ,POLYCHLORINATED BIPHENYLS,SOLID,9,III CM9879	001	CM	18000	K	
	2.					
	3. Shipper Cut # 25130					
	4.					

14. Special Handling Instructions and Additional Information
1. CM9879 ERG-171 PO#: 42557866 OSD: 8/23/16
ERI PROVIDER: CHEMTREC (CONTRACT CCN24117)

15. **GENERATOR'S/OFFEROR'S CERTIFICATION:** I hereby declare that the contents of this consignment are fully and accurately described above by the proper shipping name, and are classified, packaged, marked and labeled/placarded, and are in all respects in proper condition for transport according to applicable international and national governmental regulations. If export shipment and I am the Primary Exporter, I certify that the contents of this consignment conform to the terms of the attached EPA Acknowledgment of Consent.
I certify that the waste minimization statement identified in 40 CFR 262.27(a) (if I am a large quantity generator) or (b) (if I am a small quantity generator) is true.

Generator's/Offeror's Printed/Typed Name: DONN WILLIAMS
Signature: D Williams
Month 8 Day 24 Year 16

16. International Shipments ☐ Import to U.S. ☐ Export from U.S. Port of entry/exit:
Transporter signature (for exports only): Date leaving U.S.:

17. Transporter Acknowledgment of Receipt of Materials
Transporter 1 Printed/Typed Name: X Carl Fleming
Signature: X Carl Fleming
Month 12 Day 14 Year 16
Transporter 2 Printed/Typed Name
Signature
Month Day Year

18. Discrepancy
18a. Discrepancy Indication Space ☐ Quantity ☐ Type ☐ Residue ☐ Partial Rejection ☐ Full Rejection
Manifest Reference Number:

18b. Alternate Facility (or Generator)
U.S. EPA ID Number
Facility's Phone:

18c. Signature of Alternate Facility (or Generator)
Month Day Year

19. Hazardous Waste Report Management Method Codes (i.e., codes for hazardous waste treatment, disposal, and recycling systems)
1. 2. 3. 4.

20. Designated Facility Owner or Operator: Certification of receipt of hazardous materials covered by the manifest except as noted in Item 18a
Printed/Typed Name
Signature
Month Day Year

GENERATOR — INT'L — TRANSPORTER — DESIGNATED FACILITY

EPA Form 8700-22 (Rev. 3-05) Previous editions are obsolete.

GENERATOR'S INITIAL COPY

9.14.16

Waste Management
Emelle Facility
WEIGHED ON CARDINAL SCALES

441547

GROSS 76240 lb
12:22PM 09/02/2016

GROSS
TARE
NET

GROSS 41880 lb
01:52PM 09/02/2016

Customer: Solutia

Transporter: RDW

Truck #: 362 Trailer #: 25130

Receipt #: [redacted]517041 Manifest #: 002916279 GBF

34,340
15,586 kg

DIGITAL WEIGHT INDICATOR & PRINTER
WEIGHED BY_____

FORM 510

Box # 881 CWMI

Please print or type. (Form designed for use on elite (12-pitch) typewriter.) Form Approved. OMB No. 2050-0039

UNIFORM HAZARDOUS WASTE MANIFEST

1. Generator ID Number: EXEMPT
2. Page 1 of
3. Emergency Response Phone
4. Manifest Tracking Number: 002916290 GBF

GENERATOR

5. Generator's Name and Mailing Address
SOLUTIA, INC - ANNISTON PCB SITE
702 CLYDESDALE AVE
ANNISTON AL 36201
Generator's Phone: (601)607-1187

Generator's Site Address (if different than mailing address)
ANNISTON PCB SITE
0 PARKWIN
ANNISTON AL 36201

6. Transporter 1 Company Name: Robbie D Wood Inc
U.S. EPA ID Number: ALD067138891

7. Transporter 2 Company Name
U.S. EPA ID Number

8. Designated Facility Name and Site Address
CHEMICAL WASTE MANAGEMENT, INC.
HIGHWAY 17 NORTH, MILE MARKER 163
EMELLE AL 35459
Facility's Phone: (205)652-9721
U.S. EPA ID Number: ALD000622464

9a. HM	9b. U.S. DOT Description (including Proper Shipping Name, Hazard Class, ID Number, and Packing Group (if any))	10. Containers No.	10. Containers Type	11. Total Quantity	12. Unit Wt./Vol.	13. Waste Codes
X	1. UN3432,RQ,POLYCHLORINATED BIPHENYLS,SOLID,9,III CM9879	001	CM	18000	K	
	2.					
	3.					
	4.					

14. Special Handling Instructions and Additional Information
1. CM9879 ERG-171 PO#: OSD: 12/17/16

ERI PROVIDER: CHEMTREC (CONTRACT CCN24117)

15. **GENERATOR'S/OFFEROR'S CERTIFICATION:** I hereby declare that the contents of this consignment are fully and accurately described above by the proper shipping name, and are classified, packaged, marked and labeled/placarded, and are in all respects in proper condition for transport according to applicable international and national governmental regulations. If export shipment and I am the Primary Exporter, I certify that the contents of this consignment conform to the terms of the attached EPA Acknowledgment of Consent.
I certify that the waste minimization statement identified in 40 CFR 262.27(a) (if I am a large quantity generator) or (b) (if I am a small quantity generator) is true.

Generator's/Offeror's Printed/Typed Name: DONN WILLIAMS
Signature:
Month: 12 Day: 17 Year: 16

INT'L

16. International Shipments ☐ Import to U.S. ☐ Export from U.S. Port of entry/exit:
Transporter signature (for exports only): Date leaving U.S.:

TRANSPORTER

17. Transporter Acknowledgment of Receipt of Materials

Transporter 1 Printed/Typed Name: Freddie Lee Williams
Signature: Freddie Lee Williams
Month: 12 Day: 17 Year: 16

Transporter 2 Printed/Typed Name
Signature
Month Day Year

DESIGNATED FACILITY

18. Discrepancy

18a. Discrepancy Indication Space ☐ Quantity ☐ Type ☐ Residue ☐ Partial Rejection ☐ Full Rejection

Manifest Reference Number:

18b. Alternate Facility (or Generator)
U.S. EPA ID Number
Facility's Phone:

18c. Signature of Alternate Facility (or Generator)
Month Day Year

19. Hazardous Waste Report Management Method Codes (i.e., codes for hazardous waste treatment, disposal, and recycling systems)

1.	2.	3.	4.

20. Designated Facility Owner or Operator: Certification of receipt of hazardous materials covered by the manifest except as noted in Item 18a

Printed/Typed Name
Signature
Month Day Year

EPA Form 8700-22 (Rev. 3-05) Previous editions are obsolete.

GENERATOR'S INITIAL COPY

BOY 2151

CWMI

Please print or type. (Form designed for use on elite (12-pitch) typewriter.)

Form Approved. OMB No. 2050-0039

UNIFORM HAZARDOUS WASTE MANIFEST

1. Generator ID Number: EXEMPT
2. Page 1 of: 1
3. Emergency Response Phone:
4. Manifest Tracking Number: 003151395 GBF

5. Generator's Name and Mailing Address:
SOLUTIA, INC - ANNISTON PCB SITE
702 CLYDESDALE AVE
ANNISTON AL 36201
Generator's Phone: (601)807-1187

Generator's Site Address (if different than mailing address):
ANNISTON PCB SITE
0 PARKWIN
ANNISTON AL 36201

6. Transporter 1 Company Name: Robbie D Wood Inc
U.S. EPA ID Number: ALD067138891

7. Transporter 2 Company Name:
U.S. EPA ID Number:

8. Designated Facility Name and Site Address:
CHEMICAL WASTE MANAGEMENT, INC.
HIGHWAY 17 NORTH, MILE MARKER 163
EMELLE AL 35459
Facility's Phone: (205)652-9721
U.S. EPA ID Number: ALD000622464

9a. HM	9b. U.S. DOT Description (including Proper Shipping Name, Hazard Class, ID Number, and Packing Group (if any))	10. Containers No.	10. Containers Type	11. Total Quantity	12. Unit Wt./Vol.	13. Waste Codes
X	1. UN3432,RQ,POLYCHLORINATED BIPHENYLS,SOLID,9,III CM9879	001	CM	18000	K	
	2.					
	3.					
	4.					

14. Special Handling Instructions and Additional Information
1. CM9879 ERG-171 PO#: 42557861 OSD: 9-2-16
ERI PROVIDER: CHEMTREC (CONTRACT CCN241/7)

15. **GENERATOR'S/OFFEROR'S CERTIFICATION:** I hereby declare that the contents of this consignment are fully and accurately described above by the proper shipping name, and are classified, packaged, marked and labeled/placarded, and are in all respects in proper condition for transport according to applicable international and national governmental regulations. If export shipment and I am the Primary Exporter, I certify that the contents of this consignment conform to the terms of the attached EPA Acknowledgment of Consent.
I certify that the waste minimization statement identified in 40 CFR 262.27(a) (if I am a large quantity generator) or (b) (if I am a small quantity generator) is true.

Generator's/Offeror's Printed/Typed Name: DONN WILLIAMS
Signature: D.W. Williams
Month 9 Day 3 Year 16

16. International Shipments ☐ Import to U.S. ☐ Export from U.S. Port of entry/exit:
Transporter signature (for exports only): Date leaving U.S.:

17. Transporter Acknowledgment of Receipt of Materials

Transporter 1 Printed/Typed Name:
Signature: D.W. Williams
Month 9 Day 3 Year 16

Transporter 2 Printed/Typed Name: Clarence C Holt
Signature:
Month 09 Day 12 Year 16

18. Discrepancy

18a. Discrepancy Indication Space ☐ Quantity ☐ Type ☐ Residue ☐ Partial Rejection ☐ Full Rejection

Manifest Reference Number:

18b. Alternate Facility (or Generator)
U.S. EPA ID Number
Facility's Phone:

18c. Signature of Alternate Facility (or Generator)
Month Day Year

19. Hazardous Waste Report Management Method Codes (i.e., codes for hazardous waste treatment, disposal, and recycling systems)

1.	2.	3.	4.

20. Designated Facility Owner or Operator: Certification of receipt of hazardous materials covered by the manifest except as noted in Item 18a

Printed/Typed Name
Signature
Month Day Year

GENERATOR

INT'L

TRANSPORTER

DESIGNATED FACILITY

EPA Form 8700-22 (Rev. 3-05) Previous editions are obsolete.

GENERATOR'S INITIAL COPY

CWMI

Please print or type. (Form designed for use on elite (12-pitch) typewriter.)

Form Approved. OMB No. 2050-0039

UNIFORM HAZARDOUS WASTE MANIFEST

1. Generator ID Number: EXEMPT
2. Page 1 of: 1
3. Emergency Response Phone:
4. Manifest Tracking Number: 003151396 GBF

GENERATOR

5. Generator's Name and Mailing Address
SOLUTIA, INC - ANNISTON PCB SITE
702 CLYDESDALE AVE
ANNISTON AL 36201
Generator's Phone: (601)807-1187

Generator's Site Address (if different than mailing address)
ANNISTON PCB SITE
0 PARKWIN
ANNISTON AL 36201

6. Transporter 1 Company Name: Robbie D. Woods
U.S. EPA ID Number: ALD067138891

7. Transporter 2 Company Name:
U.S. EPA ID Number:

8. Designated Facility Name and Site Address
CHEMICAL WASTE MANAGEMENT, INC.
HIGHWAY 17 NORTH, MILE MARKER 163
EMELLE AL 35459
Facility's Phone: (205)652-9721
U.S. EPA ID Number: ALD000622464

9a. HM	9b. U.S. DOT Description (including Proper Shipping Name, Hazard Class, ID Number, and Packing Group (if any))	10. Containers No.	10. Containers Type	11. Total Quantity	12. Unit Wt./Vol.	13. Waste Codes
X	1. UN3432,RQ,POLYCHLORINATED BIPHENYLS,SOLID,9,III CM9879	001	CM	18000	K	
	2.	✓	✓	✓	✓	
	3. Can # Shipped out full 25185					
	4.					

14. Special Handling Instructions and Additional Information
1. CM9879 ERG-171 # POE 42557861 OSD: 9/3 2016
ERI PROVIDER: CHEMTREC (CONTRACT CCN24117)
GW (North of Area A)

15. **GENERATOR'S/OFFEROR'S CERTIFICATION:** I hereby declare that the contents of this consignment are fully and accurately described above by the proper shipping name, and are classified, packaged, marked and labeled/placarded, and are in all respects in proper condition for transport according to applicable international and national governmental regulations. If export shipment and I am the Primary Exporter, I certify that the contents of this consignment conform to the terms of the attached EPA Acknowledgment of Consent.
I certify that the waste minimization statement identified in 40 CFR 262.27(a) (if I am a large quantity generator) or (b) (if I am a small quantity generator) is true.

Generator's/Offeror's Printed/Typed Name: DONN WILLIAMS
Signature: D Williams
Month: 9 Day: 14 Year: 2016

INT'L

16. International Shipments ☐ Import to U.S. ☐ Export from U.S. Port of entry/exit:
Transporter signature (for exports only): Date leaving U.S.:

TRANSPORTER

17. Transporter Acknowledgment of Receipt of Materials

Transporter 1 Printed/Typed Name: Robb Carter
Signature: R Carter
Month: 9 Day: 14 Year: 16

Transporter 2 Printed/Typed Name:
Signature:
Month: Day: Year:

DESIGNATED FACILITY

18. Discrepancy

18a. Discrepancy Indication Space ☐ Quantity ☐ Type ☐ Residue ☐ Partial Rejection ☐ Full Rejection

Manifest Reference Number:

18b. Alternate Facility (or Generator)
U.S. EPA ID Number:
Facility's Phone:

18c. Signature of Alternate Facility (or Generator)
Month: Day: Year:

19. Hazardous Waste Report Management Method Codes (i.e., codes for hazardous waste treatment, disposal, and recycling systems)

1.	2.	3.	4.

20. Designated Facility Owner or Operator: Certification of receipt of hazardous materials covered by the manifest except as noted in Item 18a

Printed/Typed Name:
Signature:
Month: Day: Year:

EPA Form 8700-22 (Rev. 3-05) Previous editions are obsolete.

GENERATOR'S INITIAL COPY

CWMI

Please print or type. (Form designed for use on elite (12-pitch) typewriter.) Form Approved. OMB No. 2050-0039

UNIFORM HAZARDOUS WASTE MANIFEST

1. Generator ID Number	2. Page 1 of	3. Emergency Response Phone	4. Manifest Tracking Number
EXEMPT	1		003151397 GBF

GENERATOR

5. Generator's Name and Mailing Address
SOLUTIA, INC - ANNISTON PCB SITE
702 CLYDESDALE AVE
ANNISTON AL 36201
Generator's Phone: (601)607-1187

Generator's Site Address (if different than mailing address)
ANNISTON PCB SITE
0 PARKWIN
ANNISTON AL 36201

6. Transporter 1 Company Name
R O (illegible)
U.S. EPA ID Number
ALD067138891

7. Transporter 2 Company Name
U.S. EPA ID Number

8. Designated Facility Name and Site Address
CHEMICAL WASTE MANAGEMENT, INC.
HIGHWAY 17 NORTH, MILE MARKER 183
EMELLE AL 35459
Facility's Phone: (205)652-9721
U.S. EPA ID Number
ALD000622464

9a. HM	9b. U.S. DOT Description (including Proper Shipping Name, Hazard Class, ID Number, and Packing Group (if any))	10. Containers No.	10. Containers Type	11. Total Quantity	12. Unit Wt./Vol.	13. Waste Codes
X	1. UN3432,RQ,POLYCHLORINATED BIPHENYLS,SOLID,9,III CM9879	001	CM	18000	K	
	2.					
	3.					
	4.					

14. Special Handling Instructions and Additional Information
1. CM9879 ERG-171 PO#: 4255786 OSD: 9 15 2016
ERI PROVIDER: CHEMTREC (CONTRACT CCN24117)

15. **GENERATOR'S/OFFEROR'S CERTIFICATION:** I hereby declare that the contents of this consignment are fully and accurately described above by the proper shipping name, and are classified, packaged, marked and labeled/placarded, and are in all respects in proper condition for transport according to applicable international and national governmental regulations. If export shipment and I am the Primary Exporter, I certify that the contents of this consignment conform to the terms of the attached EPA Acknowledgment of Consent.
I certify that the waste minimization statement identified in 40 CFR 262.27(a) (if I am a large quantity generator) or (b) (if I am a small quantity generator) is true.

Generator's/Offeror's Printed/Typed Name	Signature	Month	Day	Year
DONN WILLIAMS	D.W. Williams	9	15	2016

INT'L

16. International Shipments ☐ Import to U.S. ☐ Export from U.S. Port of entry/exit:
Transporter signature (for exports only): Date leaving U.S.:

TRANSPORTER

17. Transporter Acknowledgment of Receipt of Materials

Transporter 1 Printed/Typed Name	Signature	Month	Day	Year
(illegible) CARTER	(illegible)	9	15	16
Transporter 2 Printed/Typed Name	Signature	Month	Day	Year

DESIGNATED FACILITY

18. Discrepancy

18a. Discrepancy Indication Space ☐ Quantity ☐ Type ☐ Residue ☐ Partial Rejection ☐ Full Rejection
Manifest Reference Number:

18b. Alternate Facility (or Generator) U.S. EPA ID Number
Facility's Phone:

18c. Signature of Alternate Facility (or Generator) Month Day Year

19. Hazardous Waste Report Management Method Codes (i.e., codes for hazardous waste treatment, disposal, and recycling systems)

1.	2.	3.	4.

20. Designated Facility Owner or Operator: Certification of receipt of hazardous materials covered by the manifest except as noted in Item 18a

Printed/Typed Name	Signature	Month	Day	Year

EPA Form 8700-22 (Rev. 3-05) Previous editions are obsolete.

GENERATOR'S INITIAL COPY

CWMI

Please print or type. (Form designed for use on elite (12-pitch) typewriter.)

Form Approved. OMB No. 2050-0039

UNIFORM HAZARDOUS WASTE MANIFEST

1. Generator ID Number: EXEMPT
2. Page 1 of: 1
3. Emergency Response Phone:
4. Manifest Tracking Number: 003151398 GBF

GENERATOR

5. Generator's Name and Mailing Address:
SOLUTIA, INC - ANNISTON PCB SITE
702 CLYDESDALE AVE
ANNISTON AL 36201
Generator's Phone: (601)807-1187

Generator's Site Address (if different than mailing address):
ANNISTON PCB SITE
0 PARKWIN
ANNISTON AL 36201

6. Transporter 1 Company Name: Robbie D. Woods
U.S. EPA ID Number: ALD-067138891

7. Transporter 2 Company Name:
U.S. EPA ID Number:

8. Designated Facility Name and Site Address:
CHEMICAL WASTE MANAGEMENT, INC.
HIGHWAY 17 NORTH, MILE MARKER 163
EMELLE AL 35459
Facility's Phone: (205)652-9721
U.S. EPA ID Number: ALD000622464

9a. HM	9b. U.S. DOT Description (including Proper Shipping Name, Hazard Class, ID Number, and Packing Group (if any))	10. Containers No.	10. Containers Type	11. Total Quantity	12. Unit Wt./Vol.	13. Waste Codes
X	1. UN3432,RQ,POLYCHLORINATED BIPHENYLS,SOLID,9,III CM9879	001	CM	18000	K	
	2.					
	3. Can # 5002 out					
	4.					

14. Special Handling Instructions and Additional Information
1. CM9879 ERG-171 PO#: 4255 7866 OSD: 8-30-16
ERI PROVIDER: CHEMTREC (CONTRACT CCN24117)

15. **GENERATOR'S/OFFEROR'S CERTIFICATION:** I hereby declare that the contents of this consignment are fully and accurately described above by the proper shipping name, and are classified, packaged, marked and labeled/placarded, and are in all respects in proper condition for transport according to applicable international and national governmental regulations. If export shipment and I am the Primary Exporter, I certify that the contents of this consignment conform to the terms of the attached EPA Acknowledgment of Consent.
I certify that the waste minimization statement identified in 40 CFR 262.27(a) (if I am a large quantity generator) or (b) (if I am a small quantity generator) is true.

Generator's/Offeror's Printed/Typed Name: DONN WILLIAMS
Signature: DWilliams
Month: 8 Day: 31 Year: 16

INT'L

16. International Shipments ☐ Import to U.S. ☐ Export from U.S. Port of entry/exit:
Transporter signature (for exports only): Date leaving U.S.:

TRANSPORTER

17. Transporter Acknowledgment of Receipt of Materials

Transporter 1 Printed/Typed Name: Ralph Dowling
Signature: Ralph Dowling
Month: 8 Day: 31 Year: 16

Transporter 2 Printed/Typed Name:
Signature:
Month: Day: Year:

DESIGNATED FACILITY

18. Discrepancy

18a. Discrepancy Indication Space ☐ Quantity ☐ Type ☐ Residue ☐ Partial Rejection ☐ Full Rejection
Manifest Reference Number:

18b. Alternate Facility (or Generator)
U.S. EPA ID Number:
Facility's Phone:

18c. Signature of Alternate Facility (or Generator)
Month: Day: Year:

19. Hazardous Waste Report Management Method Codes (i.e., codes for hazardous waste treatment, disposal, and recycling systems)

1.	2.	3.	4.

20. Designated Facility Owner or Operator: Certification of receipt of hazardous materials covered by the manifest except as noted in Item 18a

Printed/Typed Name:
Signature:
Month: Day: Year:

EPA Form 8700-22 (Rev. 3-05) Previous editions are obsolete.

GENERATOR'S INITIAL COPY

APPENDIX D1.2

Area A and Area E

CWMI

Please print or type. (Form designed for use on elite (12-pitch) typewriter.)

Form Approved. OMB No. 2050-0039

UNIFORM HAZARDOUS WASTE MANIFEST

1. Generator ID Number: EXEMPT
2. Page 1 of: 1
3. Emergency Response Phone:
4. Manifest Tracking Number: 002734144 GBF

GENERATOR

5. Generator's Name and Mailing Address
SOLUTIA, INC - ANNISTON PCB SITE
702 CLYDESDALE AVE
ANNISTON AL 36201
Generator's Phone: (601)807-1187

Generator's Site Address (if different than mailing address)

6. Transporter 1 Company Name — U.S. EPA ID Number

7. Transporter 2 Company Name — U.S. EPA ID Number

8. Designated Facility Name and Site Address
CHEMICAL WASTE MANAGEMENT, INC.
HIGHWAY 17 NORTH, MILE MARKER 163
EMELLE AL 35459
Facility's Phone: (205)652-9721
U.S. EPA ID Number: ALD000622464

9a. HM	9b. U.S. DOT Description (including Proper Shipping Name, Hazard Class, ID Number, and Packing Group (if any))	10. Containers No.	10. Containers Type	11. Total Quantity	12. Unit Wt./Vol.	13. Waste Codes
X	1. UN3432,RQ,POLYCHLORINATED BIPHENYLS,SOLID,9,III CM9879	001	DT	18000	K	
	2.					
	3.					
	4.					

14. Special Handling Instructions and Additional Information
1. CM9879 ERG-171
PO#: 4255786 OSD: 11-1-2015
Area A+E
ERI PROVIDER: CHEMTREC (CONTRACT CCN24117)

15. **GENERATOR'S/OFFEROR'S CERTIFICATION:** I hereby declare that the contents of this consignment are fully and accurately described above by the proper shipping name, and are classified, packaged, marked and labeled/placarded, and are in all respects in proper condition for transport according to applicable international and national governmental regulations. If export shipment and I am the Primary Exporter, I certify that the contents of this consignment conform to the terms of the attached EPA Acknowledgment of Consent.
I certify that the waste minimization statement identified in 40 CFR 262.27(a) (if I am a large quantity generator) or (b) (if I am a small quantity generator) is true.

Generator's/Offeror's Printed/Typed Name: DONN WILLIAMS
Signature: D. Williams
Month: 11 Day: 4 Year: 2015

INT'L

16. International Shipments ☐ Import to U.S. ☐ Export from U.S. Port of entry/exit:
Transporter signature (for exports only): Date leaving U.S.:

TRANSPORTER

17. Transporter Acknowledgment of Receipt of Materials
Transporter 1 Printed/Typed Name: Lorenzo Brown
Signature:
Month: 11 Day: 4 Year: 15
Transporter 2 Printed/Typed Name:
Signature:
Month: Day: Year:

DESIGNATED FACILITY

18. Discrepancy
18a. Discrepancy Indication Space ☐ Quantity ☐ Type ☐ Residue ☐ Partial Rejection ☐ Full Rejection
Manifest Reference Number:
18b. Alternate Facility (or Generator) — U.S. EPA ID Number
Facility's Phone:
18c. Signature of Alternate Facility (or Generator) — Month Day Year

19. Hazardous Waste Report Management Method Codes (i.e., codes for hazardous waste treatment, disposal, and recycling systems)
1. 2. 3. 4.

20. Designated Facility Owner or Operator: Certification of receipt of hazardous materials covered by the manifest except as noted in Item 18a
Printed/Typed Name: Signature: Month Day Year

EPA Form 8700-22 (Rev. 3-05) Previous editions are obsolete.

GENERATOR'S INITIAL COPY

APPENDIX D1.3

Area E

CWMI

Please print or type. (Form designed for use on elite (12-pitch) typewriter.)

Form Approved. OMB No. 2050-0039

UNIFORM HAZARDOUS WASTE MANIFEST

1. Generator ID Number: EXEMPT
2. Page 1 of 1
3. Emergency Response Phone: 770-337-4609
4. Manifest Tracking Number: 002734151 GBF

5. Generator's Name and Mailing Address
SOLUTIA, INC - ANNISTON PCB SITE
702 CLYDESDALE AVE
ANNISTON AL 36201
Generator's Phone: (601)807-1187

Generator's Site Address (if different than mailing address)

6. Transporter 1 Company Name: Robbie Dwood Inc
U.S. EPA ID Number: ALN[illegible]

7. Transporter 2 Company Name
U.S. EPA ID Number

8. Designated Facility Name and Site Address
CHEMICAL WASTE MANAGEMENT, INC.
HIGHWAY 17 NORTH, MILE MARKER 163
EMELLE AL 35459
Facility's Phone: (205)652-9721
U.S. EPA ID Number: ALD000622464

9a. HM	9b. U.S. DOT Description (including Proper Shipping Name, Hazard Class, ID Number, and Packing Group (if any))	10. Containers No.	10. Containers Type	11. Total Quantity	12. Unit Wt./Vol.	13. Waste Codes
X	1. UN3432,RQ,POLYCHLORINATED BIPHENYLS,SOLID,9,III CM9879	001	~~DT~~ CM	18000	K	
	2.					
	3.					
	4.					

14. Special Handling Instructions and Additional Information
1. CM9879 ERG-171 PO#: OSD: 1/19/16 Box 6048 Area E additional Footer
ERI PROVIDER: CHEMTREC (CONTRACT CCN24117)

15. **GENERATOR'S/OFFEROR'S CERTIFICATION:** I hereby declare that the contents of this consignment are fully and accurately described above by the proper shipping name, and are classified, packaged, marked and labeled/placarded, and are in all respects in proper condition for transport according to applicable international and national governmental regulations. If export shipment and I am the Primary Exporter, I certify that the contents of this consignment conform to the terms of the attached EPA Acknowledgment of Consent.
I certify that the waste minimization statement identified in 40 CFR 262.27(a) (if I am a large quantity generator) or (b) (if I am a small quantity generator) is true.

Generator's/Offeror's Printed/Typed Name: DONN WILLIAMS
Signature: [signature]
Month 1 Day 19 Year 16

16. International Shipments ☐ Import to U.S. ☐ Export from U.S. Port of entry/exit:
Transporter signature (for exports only): Date leaving U.S.:

17. Transporter Acknowledgment of Receipt of Materials
Transporter 1 Printed/Typed Name: Tony Weaver
Signature: [signature]
Month 1 Day 19 Year 16
Transporter 2 Printed/Typed Name
Signature
Month Day Year

18. Discrepancy
18a. Discrepancy Indication Space ☐ Quantity ☐ Type ☐ Residue ☐ Partial Rejection ☐ Full Rejection
Manifest Reference Number:

18b. Alternate Facility (or Generator)
U.S. EPA ID Number
Facility's Phone:

18c. Signature of Alternate Facility (or Generator)
Month Day Year

19. Hazardous Waste Report Management Method Codes (i.e., codes for hazardous waste treatment, disposal, and recycling systems)
1. 2. 3. 4.

20. Designated Facility Owner or Operator: Certification of receipt of hazardous materials covered by the manifest except as noted in Item 18a
Printed/Typed Name
Signature
Month Day Year

GENERATOR / INT'L / TRANSPORTER / DESIGNATED FACILITY

EPA Form 8700-22 (Rev. 3-05) Previous editions are obsolete.

GENERATOR'S INITIAL COPY

WM
Chemical Waste Managment
P.O. Box 55
36964 Alabama Hwy 17
Emelle, AL 35459-0055
(205)652-9721

Manifest Document Number:

SOLUTIA INC
702 CLYDESDALE AVE

ANNISTON, AL 36201-5328

Attn: DONN WILLIAMS

Site Information

SOLUTIA
702 CLYDESDALE AVE

ANNISTON, AL 36201-5328

CERTIFICATE OF DISPOSAL

Chemical Waste Management, Inc. (ALD000622464) has received PCB material from
SOLUTIA

as described on Hazardous Waste Manifest Number 002734168GBF-1
Waste Management, Inc. hereby certifies that the above described material (excluding PCB liquids, if applicable) was landfilled on the dates shown below, in compliance with State and Federal Regulations.

Under civil and criminal penalties of law for the making or submission of false or fraudulent statements or representation (18 U.S.C. 1001 and 15 U.S.C. 2615), I certify that the information contained in or accompanying this document is true, accurate and complete. As to the identified section(s) of this document for which I cannot personally verify truth and accuracy, I certify as the company official having supervisory responsibility for the persons who, acting under my direct instructions, made the verification that this information is true, accurate and complete.

Al Talbott/cm

Al Talbott, Safety Manager
October 03, 2015

OSD	Unique ID	Cont #	Profile	Disposed	Description
9/21/15	002734168GBF-01	1	CM9879	9/29/15	ANNISTON PCB SITE CONSENT DECR

779

CWMI

Please print or type. (Form designed for use on elite (12-pitch) typewriter.)

Form Approved. OMB No. 2050-0039

UNIFORM HAZARDOUS WASTE MANIFEST

1. Generator ID Number	2. Page 1 of	3. Emergency Response Phone	4. Manifest Tracking Number
EXEMPT	1	770-337-4669	002734168 GBF

GENERATOR

5. Generator's Name and Mailing Address

SOLUTIA, INC - ANNISTON PCB SITE
702 CLYDESDALE AVE
ANNISTON AL 36201

Generator's Phone: (601)807-1187

Generator's Site Address (if different than mailing address)

6. Transporter 1 Company Name: Robbie D WOOD — U.S. EPA ID Number: ALD 067138691

7. Transporter 2 Company Name — U.S. EPA ID Number

8. Designated Facility Name and Site Address

CHEMICAL WASTE MANAGEMENT, INC.
HIGHWAY 17 NORTH, MILE MARKER 163
EMELLE AL 35459

Facility's Phone: (205)652-9721

U.S. EPA ID Number: ALD000622464

9a. HM	9b. U.S. DOT Description (including Proper Shipping Name, Hazard Class, ID Number, and Packing Group (if any))	10. Containers No.	10. Containers Type	11. Total Quantity	12. Unit Wt./Vol.	13. Waste Codes
X	1. UN3432,RQ,POLYCHLORINATED BIPHENYLS,SOLID,9,III CM9879	001	~~DT~~ CM	~~18000~~ 9888	~~K~~	
	2.			369/30/15		
	3.					
	4.					

14. Special Handling Instructions and Additional Information

1. CM9879 ERG-171 PO#: 4255 7866 OSD: 9/21/15

ERI PROVIDER: CHEMTREC (CONTRACT CCN24117) Box #779 Anne E Lowell

15. **GENERATOR'S/OFFEROR'S CERTIFICATION:** I hereby declare that the contents of this consignment are fully and accurately described above by the proper shipping name, and are classified, packaged, marked and labeled/placarded, and are in all respects in proper condition for transport according to applicable international and national governmental regulations. If export shipment and I am the Primary Exporter, I certify that the contents of this consignment conform to the terms of the attached EPA Acknowledgment of Consent.
I certify that the waste minimization statement identified in 40 CFR 262.27(a) (if I am a large quantity generator) or (b) (if I am a small quantity generator) is true.

Generator's/Offeror's Printed/Typed Name: DONN WILLIAMS — Signature: DW Williams — Month: 9 Day: 21 Year: 15

INT'L

16. International Shipments ☐ Import to U.S. ☐ Export from U.S. Port of entry/exit:

Transporter signature (for exports only): Date leaving U.S.:

TRANSPORTER

17. Transporter Acknowledgment of Receipt of Materials

Transporter 1 Printed/Typed Name: FLOYD CARTER — Signature: F Carter — Month: 9 Day: 21 Year: 15

Transporter 2 Printed/Typed Name — Signature — Month — Day — Year

DESIGNATED FACILITY

18. Discrepancy

18a. Discrepancy Indication Space ☒ Quantity ☐ Type ☐ Residue ☐ Partial Rejection ☐ Full Rejection

Corrected to rec'd wt per Donn Williams. JB 9/30/15 Manifest Reference Number:

18b. Alternate Facility (or Generator) — U.S. EPA ID Number

Facility's Phone:

18c. Signature of Alternate Facility (or Generator) — Month — Day — Year

19. Hazardous Waste Report Management Method Codes (i.e., codes for hazardous waste treatment, disposal, and recycling systems)

1.	2.	3.	4.
H132			

20. Designated Facility Owner or Operator: Certification of receipt of hazardous materials covered by the manifest except as noted in Item 18a

Printed/Typed Name: Mal Alexander — Signature: Mal Alexander — Month: 9 Day: 29 Year: 15

EPA Form 8700-22 (Rev. 3-05) Previous editions are obsolete.

DESIGNATED FACILITY TO GENERATOR

23933

PRIORITY PRINTING - MERIDIAN, MISSISSIPPI

WASTE MANAGEMENT

Waste Management
Emelle Facility
WEIGHED ON CARDINAL SCALES

435606

GROSS 61920 lb
09:09AM 09/29/2015

GROSS 40120 lb
01:40PM 09/29/2015

GROSS
TARE
NET

21,800
9888kg

Customer: Solutia

Transporter: RDW

Truck #: 205 Trailer #: 779

Receipt #: 508856 Manifest #: 002734168GBF

DIGITAL WEIGHT INDICATOR & PRINTER
WEIGHED BY MA

FORM 510

Chemical Waste Management
P.O. Box 55
36964 Alabama Hwy 17
Emelle, AL 35459-0055
(205)652-9721

SOLUTIA INC
702 CLYDESDALE AVE

ANNISTON,AL 36201-5328

Attn: DONN WILLIAMS

Site Infomation

SOLUTIA
702 CLYDESDALE AVE

ANNISTON,AL 36201-5328

ACKNOWLEDGEMENT OF RECEIPT OF WASTE SHIPMENT

Generator Name: SOLUTIA
Enclosed is/are your Generator Number Two copy / copies for Alabama Manifest Numbers:

002734168GBF

This copy is to acknowledge that Chemical Waste Management, Inc., of Emelle, Alabama has received your shipment. As a requirement of 40 CFR 264.12 (b), this letter serves to inform you that this facility has the proper permits and will accept your shipment upon completion of waste analysis procedures specified in the facility's Waste Analysis Plan and as determined in the approval waste profile submitted for this/these wastes.

As of September 26, 1997, Chemical Waste Management, Inc., Emelle Alabama (ALD000622464) is operating under a AHWMMA Permit, issued by the Alabama Department of Environmental Management. (RCRA)

Al Talbott
Safety Manager

October 03, 2015

Chemical Waste Management
P.O. Box 55
36964 Alabama Hwy 17
Emelle, AL 35459-0055
(205)652-9721

SOLUTIA INC
702 CLYDESDALE AVE

ANNISTON,AL 36201-5328

Attn: DONN WILLIAMS

Site Infomation

SOLUTIA
702 CLYDESDALE AVE

ANNISTON,AL 36201-5328

ACKNOWLEDGEMENT OF RECEIPT OF WASTE SHIPMENT

Generator Name: SOLUTIA
Enclosed is/are your Generator Number Two copy / copies for Alabama Manifest Numbers:

002734168GBF

This copy is to acknowledge that Chemical Waste Management, Inc., of Emelle, Alabama has received your shipment. As a requirement of 40 CFR 264.12 (b), this letter serves to inform you that this facility has the proper permits and will accept your shipment upon completion of waste analysis procedures specified in the facility's Waste Analysis Plan and as determined in the approval waste profile submitted for this/these wastes.

As of September 26, 1997, Chemical Waste Management, Inc., Emelle Alabama (ALD000622464) is operating under a AHWMMA Permit, issued by the Alabama Department of Environmental Management. (RCRA)

Al Talbott
Safety Manager

October 03, 2015

WM
Chemical Waste Managment
P.O. Box 55
36964 Alabama Hwy 17
Emelle, AL 35459-0055
(205)652-9721

Manifest Document Number:

SOLUTIA INC
702 CLYDESDALE AVE

ANNISTON, AL 36201-5328

Attn: DONN WILLIAMS

Site Information

SOLUTIA
702 CLYDESDALE AVE

ANNISTON, AL 36201-5328

CERTIFICATE OF DISPOSAL

Chemical Waste Management, Inc. (ALD000622464) has received PCB material from
SOLUTIA

as described on Hazardous Waste Manifest Number 002734169GBF-1
Waste Management, Inc. hereby certifies that the above described material (excluding PCB liquids, if applicable) was landfilled on the dates shown below, in compliance with State and Federal Regulations.

Under civil and criminal penalties of law for the making or submission of false or fraudulent statements or representation (18 U.S.C. 1001 and 15 U.S.C. 2615), I certify that the information contained in or accompanying this document is true, accurate and complete. As to the identified section(s) of this document for which I cannot personally verify truth and accuracy, I certify as the company official having supervisory responsibility for the persons who, acting under my direct instructions, made the verification that this information is true, accurate and complete.

Al Talbott/CM

Al Talbott, Safety Manager
September 29, 2015

OSD	Unique ID	Cont #	Profile	Disposed	Description
9/17/15	002734169GBF-01	1	CM9879	9/25/15	ANNISTON PCB SITE CONSENT DECR

Ld# 1197914 Box # 857

CWMI

Please print or type. (Form designed for use on elite (12-pitch) typewriter.) Form Approved. OMB No. 2050-0039

UNIFORM HAZARDOUS WASTE MANIFEST

1. Generator ID Number	2. Page 1 of	3. Emergency Response Phone	4. Manifest Tracking Number
EXEMPT	1	770-337-4689	002734169 GBF

GENERATOR

5. Generator's Name and Mailing Address

SOLUTIA, INC - ANNISTON PCB SITE
702 CLYDESDALE AVE
ANNISTON AL 36201

Generator's Phone: (601)607-1187

Generator's Site Address (if different than mailing address)

6. Transporter 1 Company Name: Robbie D Wood INC. U.S. EPA ID Number: ALD067138891

7. Transporter 2 Company Name U.S. EPA ID Number

8. Designated Facility Name and Site Address

CHEMICAL WASTE MANAGEMENT, INC.
HIGHWAY 17 NORTH, MILE MARKER 163
EMELLE AL 35459

U.S. EPA ID Number: ALD000622464

Facility's Phone: (205)652-9721

9a. HM	9b. U.S. DOT Description (including Proper Shipping Name, Hazard Class, ID Number, and Packing Group (if any))	10. Containers No.	10. Containers Type	11. Total Quantity	12. Unit Wt./Vol.	13. Waste Codes
X	1. UN3432,RQ,POLYCHLORINATED BIPHENYLS,SOLID,9,III CM9879	001	~~BT~~ CM	~~18000~~ 4409	K	
	2.			9-25-15		
	3.					
	4.					

14. Special Handling Instructions and Additional Information

1. CM9879 ERG-171 PO#: 4255786 OSD: 9/17/15 Box #857

ERI PROVIDER: CHEMTREC (CONTRACT CCN24117) Area E two Landfill Cells

15. **GENERATOR'S/OFFEROR'S CERTIFICATION:** I hereby declare that the contents of this consignment are fully and accurately described above by the proper shipping name, and are classified, packaged, marked and labeled/placarded, and are in all respects in proper condition for transport according to applicable international and national governmental regulations. If export shipment and I am the Primary Exporter, I certify that the contents of this consignment conform to the terms of the attached EPA Acknowledgment of Consent.
I certify that the waste minimization statement identified in 40 CFR 262.27(a) (if I am a large quantity generator) or (b) (if I am a small quantity generator) is true.

Generator's/Offeror's Printed/Typed Name: DONN WILLIAMS Signature: DW Month 9 Day 17 Year 15

INT'L

16. International Shipments ☐ Import to U.S. ☐ Export from U.S. Port of entry/exit:
Transporter signature (for exports only): Date leaving U.S.:

TRANSPORTER

17. Transporter Acknowledgment of Receipt of Materials

Transporter 1 Printed/Typed Name: Olin Williams Signature: OW Month 9 Day 17 Year 15

Transporter 2 Printed/Typed Name Signature Month Day Year

DESIGNATED FACILITY

18. Discrepancy

18a. Discrepancy Indication Space ☐ Quantity ☐ Type ☐ Residue ☐ Partial Rejection ☐ Full Rejection

Corrected Kg weight per Donn Williams 9-25-15 Manifest Reference Number:

18b. Alternate Facility (or Generator) U.S. EPA ID Number

Facility's Phone:

18c. Signature of Alternate Facility (or Generator) Month Day Year

19. Hazardous Waste Report Management Method Codes (i.e., codes for hazardous waste treatment, disposal, and recycling systems)

1.	2.	3.	4.
H132			

20. Designated Facility Owner or Operator: Certification of receipt of hazardous materials covered by the manifest except as noted in Item 18a

Printed/Typed Name: Matt Alexander Signature: Matt Alexander Month 9 Day 25 Year 15

EPA Form 8700-22 (Rev. 3-05) Previous editions are obsolete.

DESIGNATED FACILITY TO GENERATOR

23933

PRIORITY PRINTING - MERIDIAN, MISSISSIPPI

Waste Management
Emelle Facility
WEIGHED ON CARDINAL SCALES

435426

GROSS 44840 lb

08:16AM 09/25/2015

GROSS 35120 lb

01:56PM 09/25/2015

9720

4409K

GROSS

TARE

NET

Customer: Solutia

Transporter: BOW

Truck #: 209 Trailer #: 857

Receipt #: 508785 Manifest #: 002734169 GBF

DIGITAL WEIGHT INDICATOR & PRINTER

WEIGHED BY MA

FORM 510

Chemical Waste Management
P.O. Box 55
36964 Alabama Hwy 17
Emelle, AL 35459-0055
(205)652-9721

SOLUTIA INC
702 CLYDESDALE AVE

ANNISTON,AL 36201-5328

Attn: DONN WILLIAMS

Site Infomation

SOLUTIA
702 CLYDESDALE AVE

ANNISTON,AL 36201-5328

ACKNOWLEDGEMENT OF RECEIPT OF WASTE SHIPMENT

Generator Name: SOLUTIA
Enclosed is/are your Generator Number Two copy / copies for Alabama Manifest Numbers:

002734169GBF

This copy is to acknowledge that Chemical Waste Management, Inc., of Emelle, Alabama has received your shipment. As a requirement of 40 CFR 264.12 (b), this letter serves to inform you that this facility has the proper permits and will accept your shipment upon completion of waste analysis procedures specified in the facility's Waste Analysis Plan and as determined in the approval waste profile submitted for this/these wastes.

As of September 26, 1997, Chemical Waste Management, Inc., Emelle Alabama (ALD000622464) is operating under a AHWMMA Permit, issued by the Alabama Department of Environmental Management. (RCRA)

Al Talbott
Safety Manager

September 29, 2015

WM
Chemical Waste Managment
P.O. Box 55
36964 Alabama Hwy 17
Emelle, AL 35459-0055
(205)652-9721

Manifest Document Number:

SOLUTIA INC
702 CLYDESDALE AVE

ANNISTON, AL 36201-5328

Attn: DONN WILLIAMS

Site Information

SOLUTIA
702 CLYDESDALE AVE

ANNISTON, AL 36201-5328

CERTIFICATE OF DISPOSAL

Chemical Waste Management, Inc. (ALD000622464) has received PCB material from
SOLUTIA

as described on Hazardous Waste Manifest Number 002734170GBF-1
Waste Management, Inc. hereby certifies that the above described material (excluding PCB liquids, if applicable) was landfilled on the dates shown below, in compliance with State and Federal Regulations.

Under civil and criminal penalties of law for the making or submission of false or fraudulent statements or representation (18 U.S.C. 1001 and 15 U.S.C. 2615), I certify that the information contained in or accompanying this document is true, accurate and complete. As to the identified section(s) of this document for which I cannot personally verify truth and accuracy, I certify as the company official having supervisory responsibility for the persons who, acting under my direct instructions, made the verification that this information is true, accurate and complete.

Al Talbott /cm

Al Talbott, Safety Manager
October 07, 2015

OSD	Unique ID	Cont #	Profile	Disposed	Description
9/25/15	002734170GBF-01	1	CM9879	10/3/15	ANNISTON PCB SITE CONSENT DECR

Box 25209

CWMI 1198590

Please print or type. (Form designed for use on elite (12-pitch) typewriter.) Form Approved. OMB No. 2050-0039

UNIFORM HAZARDOUS WASTE MANIFEST

1. Generator ID Number: EXEMPT
2. Page 1 of: 1
3. Emergency Response Phone:
4. Manifest Tracking Number: 002734170 GBF

GENERATOR

5. Generator's Name and Mailing Address:
SOLUTIA, INC - ANNISTON PCB SITE
702 CLYDESDALE AVE
ANNISTON AL 36201
Generator's Phone: (601)807-1187

Generator's Site Address (if different than mailing address):

6. Transporter 1 Company Name: Robbie D Wood Inc
U.S. EPA ID Number: ALD067138891

7. Transporter 2 Company Name:
U.S. EPA ID Number:

8. Designated Facility Name and Site Address:
CHEMICAL WASTE MANAGEMENT, INC.
HIGHWAY 17 NORTH, MILE MARKER 163
EMELLE AL 35459
Facility's Phone: (205)652-9721
U.S. EPA ID Number: ALD000622464

9a. HM	9b. U.S. DOT Description (including Proper Shipping Name, Hazard Class, ID Number, and Packing Group (if any))	10. Containers No.	10. Containers Type	11. Total Quantity	12. Unit Wt./Vol.	13. Waste Codes
X	1. UN3432,RQ,POLYCHLORINATED BIPHENYLS,SOLID,9,III CM9879	001	DT	10,650 ~~18000~~	K	
	2.			JB 10/2/15		
	3.					
	4.					

14. Special Handling Instructions and Additional Information
1. CM9879 ERG-171 PO#:42557866 OSD: 9/25/15 Box 25209
ERI PROVIDER: CHEMTREC (CONTRACT CCN24117) Alec E Wall

15. **GENERATOR'S/OFFEROR'S CERTIFICATION:** I hereby declare that the contents of this consignment are fully and accurately described above by the proper shipping name, and are classified, packaged, marked and labeled/placarded, and are in all respects in proper condition for transport according to applicable international and national governmental regulations. If export shipment and I am the Primary Exporter, I certify that the contents of this consignment conform to the terms of the attached EPA Acknowledgment of Consent.
I certify that the waste minimization statement identified in 40 CFR 262.27(a) (if I am a large quantity generator) or (b) (if I am a small quantity generator) is true.

Generator's/Offeror's Printed/Typed Name: DONN WILLIAMS
Signature: DWilliams
Month: 09 Day: 25 Year: 15

INT'L

16. International Shipments ☐ Import to U.S. ☐ Export from U.S. Port of entry/exit:
Transporter signature (for exports only): Date leaving U.S.:

TRANSPORTER

17. Transporter Acknowledgment of Receipt of Materials

Transporter 1 Printed/Typed Name: Clarence C Hall
Signature:
Month: 09 Day: 25 Year: 15

Transporter 2 Printed/Typed Name:
Signature:
Month: Day: Year:

DESIGNATED FACILITY

18. Discrepancy

18a. Discrepancy Indication Space ☒ Quantity ☐ Type ☐ Residue ☐ Partial Rejection ☐ Full Rejection
Correct to recvd wt per Donn Williams JB 10/2/15 Manifest Reference Number:

18b. Alternate Facility (or Generator)
U.S. EPA ID Number:
Facility's Phone:

18c. Signature of Alternate Facility (or Generator)
Month: Day: Year:

19. Hazardous Waste Report Management Method Codes (i.e., codes for hazardous waste treatment, disposal, and recycling systems)

1.	2.	3.	4.
H132			

20. Designated Facility Owner or Operator: Certification of receipt of hazardous materials covered by the manifest except as noted in Item 18a

Printed/Typed Name: Judy Bankhead
Signature: Judy Bankhead
Month: 10 Day: 02 Year: 15

EPA Form 8700-22 (Rev. 3-05) Previous editions are obsolete.

DESIGNATED FACILITY TO GENERATOR

23933

PRIORITY PRINTING - MERIDIAN, MISSISSIPPI

Waste Management
Emelle Facility
WEIGHED ON CARDINAL SCALES

435968

GROSS 63120 lb
11:34AM 10/02/2015

GROSS 39640 lb
11:55AM 10/03/2015

23480

GROSS
TARE
NET

Customer: Solutia

10650K

Transporter: RDW

Truck #: 205 Trailer #: 25209

Receipt #: 508977 Manifest #: 002234170GBF

DIGITAL WEIGHT INDICATOR & PRINTER

WEIGHED BY JB

FORM 510

Chemical Waste Management
P.O. Box 55
36964 Alabama Hwy 17
Emelle, AL 35459-0055
(205)652-9721

SOLUTIA INC
702 CLYDESDALE AVE

ANNISTON,AL 36201-5328

Attn: DONN WILLIAMS

Site Infomation

SOLUTIA
702 CLYDESDALE AVE

ANNISTON,AL 36201-5328

ACKNOWLEDGEMENT OF RECEIPT OF WASTE SHIPMENT

Generator Name: SOLUTIA
Enclosed is/are your Generator Number Two copy / copies for Alabama Manifest Numbers:

002734170GBF

This copy is to acknowledge that Chemical Waste Management, Inc., of Emelle, Alabama has received your shipment. As a requirement of 40 CFR 264.12 (b), this letter serves to inform you that this facility has the proper permits and will accept your shipment upon completion of waste analysis procedures specified in the facility's Waste Analysis Plan and as determined in the approval waste profile submitted for this/these wastes.

As of September 26, 1997, Chemical Waste Management, Inc., Emelle Alabama (ALD000622464) is operating under a AHWMMA Permit, issued by the Alabama Department of Environmental Management. (RCRA)

Al Talbott
Safety Manager

October 07, 2015

BOX# 737 Load# 1197148 CWMI

Please print or type. (Form designed for use on elite (12-pitch) typewriter.)

Form Approved. OMB No. 2050-0039

UNIFORM HAZARDOUS WASTE MANIFEST

1. Generator ID Number: EXEMPT
2. Page 1 of 1
3. Emergency Response Phone:
4. Manifest Tracking Number: 002734173 GBF

5. Generator's Name and Mailing Address:
SOLUTIA, INC - ANNISTON PCB SITE
702 CLYDESDALE AVE
ANNISTON AL 36201
Generator's Phone: (601)807-1187

Generator's Site Address (if different than mailing address):

6. Transporter 1 Company Name: Robbie D Wood
U.S. EPA ID Number: ALD067138891

7. Transporter 2 Company Name:
U.S. EPA ID Number:

8. Designated Facility Name and Site Address:
CHEMICAL WASTE MANAGEMENT, INC.
HIGHWAY 17 NORTH, MILE MARKER 163
EMELLE AL 35459
Facility's Phone: (205)652-9721
U.S. EPA ID Number: ALD000622464

9a. HM	9b. U.S. DOT Description (including Proper Shipping Name, Hazard Class, ID Number, and Packing Group (if any))	10. Containers No.	10. Containers Type	11. Total Quantity	12. Unit Wt./Vol.	13. Waste Codes
X	1. UN3432,RQ,POLYCHLORINATED BIPHENYLS,SOLID,9,III CM9879	001	DT	18000	K	
	2.					
	3.					
	4.					

14. Special Handling Instructions and Additional Information
1. CM9879 ERG-171 PO#: 4255716 OSD: 9/11/15
ERI PROVIDER: CHEMTREC (CONTRACT CCN24117) Acc F Box 737

15. **GENERATOR'S/OFFEROR'S CERTIFICATION:** I hereby declare that the contents of this consignment are fully and accurately described above by the proper shipping name, and are classified, packaged, marked and labeled/placarded, and are in all respects in proper condition for transport according to applicable international and national governmental regulations. If export shipment and I am the Primary Exporter, I certify that the contents of this consignment conform to the terms of the attached EPA Acknowledgment of Consent.
I certify that the waste minimization statement identified in 40 CFR 262.27(a) (if I am a large quantity generator) or (b) (if I am a small quantity generator) is true.

Generator's/Offeror's Printed/Typed Name: DONN WILLIAMS
Signature: Donn Williams
Month 9 Day 11 Year 15

16. International Shipments ☐ Import to U.S. ☐ Export from U.S. Port of entry/exit:
Transporter signature (for exports only): Date leaving U.S.:

17. Transporter Acknowledgment of Receipt of Materials
Transporter 1 Printed/Typed Name: William W. Wood Jr
Signature: [signature]
Month 09 Day 11 Year 15
Transporter 2 Printed/Typed Name:
Signature:
Month Day Year

18. Discrepancy
18a. Discrepancy Indication Space ☐ Quantity ☐ Type ☐ Residue ☐ Partial Rejection ☐ Full Rejection
Manifest Reference Number:

18b. Alternate Facility (or Generator)
U.S. EPA ID Number:
Facility's Phone:

18c. Signature of Alternate Facility (or Generator)
Month Day Year

19. Hazardous Waste Report Management Method Codes (i.e., codes for hazardous waste treatment, disposal, and recycling systems)
1. 2. 3. 4.

20. Designated Facility Owner or Operator: Certification of receipt of hazardous materials covered by the manifest except as noted in Item 18a
Printed/Typed Name:
Signature:
Month Day Year

GENERATOR / INT'L / TRANSPORTER / DESIGNATED FACILITY

EPA Form 8700-22 (Rev. 3-05) Previous editions are obsolete.

GENERATOR'S INITIAL COPY

CWMI

Box #25228

Please print or type. (Form designed for use on elite (12-pitch) typewriter.)

Form Approved. OMB No. 2050-0039

UNIFORM HAZARDOUS WASTE MANIFEST

1. Generator ID Number: EXEMPT
2. Page 1 of 1
3. Emergency Response Phone:
4. Manifest Tracking Number: 002734176 GBF

5. Generator's Name and Mailing Address:
SOLUTIA, INC - ANNISTON PCB SITE
702 CLYDESDALE AVE
ANNISTON AL 36201
Generator's Phone: (601)807-1187

Generator's Site Address (if different than mailing address):

6. Transporter 1 Company Name: Robbie D Wood Inc
U.S. EPA ID Number: ALD067138891

7. Transporter 2 Company Name:
U.S. EPA ID Number:

8. Designated Facility Name and Site Address:
CHEMICAL WASTE MANAGEMENT, INC.
HIGHWAY 17 NORTH, MILE MARKER 163
EMELLE AL 35459
Facility's Phone: (205)652-9721
U.S. EPA ID Number: ALD000622464

9a. HM	9b. U.S. DOT Description (including Proper Shipping Name, Hazard Class, ID Number, and Packing Group (if any))	10. Containers No.	Type	11. Total Quantity	12. Unit Wt./Vol.	13. Waste Codes
X	1. UN3432,RQ,POLYCHLORINATED BIPHENYLS,SOLID,9,III CM9879	001	DT	18000	K	
	2.					
	3.					
	4.					

14. Special Handling Instructions and Additional Information
1. CM9879 ERG-171 PO#: [illegible] OSD: 9/15/15 9/11/15
ERI PROVIDER: CHEMTREC (CONTRACT CCN24117)
Area E Well

15. **GENERATOR'S/OFFEROR'S CERTIFICATION:** I hereby declare that the contents of this consignment are fully and accurately described above by the proper shipping name, and are classified, packaged, marked and labeled/placarded, and are in all respects in proper condition for transport according to applicable international and national governmental regulations. If export shipment and I am the Primary Exporter, I certify that the contents of this consignment conform to the terms of the attached EPA Acknowledgment of Consent.
I certify that the waste minimization statement identified in 40 CFR 262.27(a) (if I am a large quantity generator) or (b) (if I am a small quantity generator) is true.

Generator's/Offeror's Printed/Typed Name: DONN WILLIAMS
Signature: D Williams
Month 9 Day 15 Year 15

16. International Shipments ☐ Import to U.S. ☐ Export from U.S. Port of entry/exit:
Transporter signature (for exports only): Date leaving U.S.:

17. Transporter Acknowledgment of Receipt of Materials
Transporter 1 Printed/Typed Name: Freddie Lee Williams
Signature: Freddie Lee Williams
Month 09 Day 16 Year 15
Transporter 2 Printed/Typed Name:
Signature:
Month Day Year

18. Discrepancy
18a. Discrepancy Indication Space ☐ Quantity ☐ Type ☐ Residue ☐ Partial Rejection ☐ Full Rejection
Manifest Reference Number:
18b. Alternate Facility (or Generator)
U.S. EPA ID Number
Facility's Phone:
18c. Signature of Alternate Facility (or Generator)
Month Day Year

19. Hazardous Waste Report Management Method Codes (i.e., codes for hazardous waste treatment, disposal, and recycling systems)
1. 2. 3. 4.

20. Designated Facility Owner or Operator: Certification of receipt of hazardous materials covered by the manifest except as noted in Item 18a
Printed/Typed Name
Signature
Month Day Year

GENERATOR / INT'L / TRANSPORTER / DESIGNATED FACILITY

EPA Form 8700-22 (Rev. 3-05) Previous editions are obsolete.

GENERATOR'S INITIAL COPY

CWM

Please print or type. (Form designed for use on elite (12-pitch) typewriter.)

Form Approved. OMB No. 2050-0039

UNIFORM HAZARDOUS WASTE MANIFEST

1. Generator ID Number: EXEMPT
2. Page 1 of 1
3. Emergency Response Phone:
4. Manifest Tracking Number: 002916280 GBF

5. Generator's Name and Mailing Address:
SOLUTIA, INC - ANNISTON PCB SITE
702 CLYDESDALE AVE
ANNISTON AL 36201
Generator's Phone: (601)807-1187

Generator's Site Address (if different than mailing address):
ANNISTON PCB SITE
0 PARKWIN
ANNISTON AL 36201

6. Transporter 1 Company Name: Robbie D Wood — U.S. EPA ID Number: ALD067138891

7. Transporter 2 Company Name: — U.S. EPA ID Number:

8. Designated Facility Name and Site Address:
CHEMICAL WASTE MANAGEMENT, INC.
HIGHWAY 17 NORTH, MILE MARKER 163
EMELLE AL 35459
Facility's Phone: (205)652-9721
U.S. EPA ID Number: ALD000622464

9a. HM	9b. U.S. DOT Description (including Proper Shipping Name, Hazard Class, ID Number, and Packing Group (if any))	10. Containers No.	Type	11. Total Quantity	12. Unit Wt./Vol.	13. Waste Codes
X	1. UN3432,RQ,POLYCHLORINATED BIPHENYLS,SOLID,9,III CM9879	001	CM	18000	K	
	2.					
	3.					
	4.					

14. Special Handling Instructions and Additional Information
1. CM9879 ERG-171 PO#: 42557466 OSD: 5/4/16 Box 25246
ERI PROVIDER: CHEMTREC (CONTRACT CCN24117) Area E Footer Re-dig.

15. **GENERATOR'S/OFFEROR'S CERTIFICATION:** I hereby declare that the contents of this consignment are fully and accurately described above by the proper shipping name, and are classified, packaged, marked and labeled/placarded, and are in all respects in proper condition for transport according to applicable international and national governmental regulations. If export shipment and I am the Primary Exporter, I certify that the contents of this consignment conform to the terms of the attached EPA Acknowledgment of Consent.
I certify that the waste minimization statement identified in 40 CFR 262.27(a) (if I am a large quantity generator) or (b) (if I am a small quantity generator) is true.

Generator's/Offeror's Printed/Typed Name: DONN WILLIAMS — Signature: [signature] — Month 5 Day 4 Year 16

16. International Shipments ☐ Import to U.S. ☐ Export from U.S. Port of entry/exit:
Transporter signature (for exports only): Date leaving U.S.:

17. Transporter Acknowledgment of Receipt of Materials
Transporter 1 Printed/Typed Name: Floyd Carter — Signature: [signature] — Month 5 Day 4 Year 16
Transporter 2 Printed/Typed Name: — Signature: — Month Day Year

18. Discrepancy
18a. Discrepancy Indication Space ☐ Quantity ☐ Type ☐ Residue ☐ Partial Rejection ☐ Full Rejection
Manifest Reference Number:
18b. Alternate Facility (or Generator) — U.S. EPA ID Number
Facility's Phone:
18c. Signature of Alternate Facility (or Generator) — Month Day Year

19. Hazardous Waste Report Management Method Codes (i.e., codes for hazardous waste treatment, disposal, and recycling systems)
1. 2. 3. 4.

20. Designated Facility Owner or Operator: Certification of receipt of hazardous materials covered by the manifest except as noted in Item 18a
Printed/Typed Name — Signature — Month Day Year

GENERATOR — INT'L — TRANSPORTER — DESIGNATED FACILITY

EPA Form 8700-22 (Rev. 3-05) Previous editions are obsolete.

GENERATOR'S INITIAL COPY

APPENDIX D1.4

Areas C and D

Box #25147 Load #120763 CWMI

Please print or type. (Form designed for use on elite (12-pitch) typewriter.) Form Approved. OMB No. 2050-0039

UNIFORM HAZARDOUS WASTE MANIFEST

1. Generator ID Number	2. Page 1 of	3. Emergency Response Phone	4. Manifest Tracking Number
EXEMPT	1	770-732-4149	002734149 GBF

GENERATOR

5. Generator's Name and Mailing Address
SOLUTIA, INC - ANNISTON PCB SITE
702 CLYDESDALE AVE
ANNISTON AL 36201
Generator's Phone: (801)807-1187

Generator's Site Address (if different than mailing address)

6. Transporter 1 Company Name: Robbie D Wood INC — U.S. EPA ID Number: ALD067736691

7. Transporter 2 Company Name — U.S. EPA ID Number

8. Designated Facility Name and Site Address
CHEMICAL WASTE MANAGEMENT, INC.
HIGHWAY 17 NORTH, MILE MARKER 163
EMELLE AL 35459
Facility's Phone: (205)652-9721 — U.S. EPA ID Number: ALD000622464

9a. HM	9b. U.S. DOT Description (including Proper Shipping Name, Hazard Class, ID Number, and Packing Group (if any))	10. Containers No.	10. Containers Type	11. Total Quantity	12. Unit Wt./Vol.	13. Waste Codes
X	1. UN3432,RQ,POLYCHLORINATED BIPHENYLS,SOLID,9,III CM9879	001	~~DT~~ CM	18000	K	
	2.					
	3.					
	4.					

14. Special Handling Instructions and Additional Information
1. CM9879 ERG-171 PO#: 4355866 OSD: 2/1/16
ERI PROVIDER: CHEMTREC (CONTRACT CCN24117)

Box 25147
C&D Drainage swale

15. **GENERATOR'S/OFFEROR'S CERTIFICATION:** I hereby declare that the contents of this consignment are fully and accurately described above by the proper shipping name, and are classified, packaged, marked and labeled/placarded, and are in all respects in proper condition for transport according to applicable international and national governmental regulations. If export shipment and I am the Primary Exporter, I certify that the contents of this consignment conform to the terms of the attached EPA Acknowledgment of Consent.
I certify that the waste minimization statement identified in 40 CFR 262.27(a) (if I am a large quantity generator) or (b) (if I am a small quantity generator) is true.

Generator's/Offeror's Printed/Typed Name: DONN WILLIAMS — Signature — Month: 2 Day: 1 Year: 16

INT'L

16. International Shipments ☐ Import to U.S. ☐ Export from U.S. Port of entry/exit:
Transporter signature (for exports only): Date leaving U.S.:

TRANSPORTER

17. Transporter Acknowledgment of Receipt of Materials

Transporter 1 Printed/Typed Name: William D Woods JR — Signature — Month: 02 Day: 01 Year: 16

Transporter 2 Printed/Typed Name — Signature — Month — Day — Year

DESIGNATED FACILITY

18. Discrepancy

18a. Discrepancy Indication Space ☐ Quantity ☐ Type ☐ Residue ☐ Partial Rejection ☐ Full Rejection

Manifest Reference Number:

18b. Alternate Facility (or Generator) — U.S. EPA ID Number
Facility's Phone:

18c. Signature of Alternate Facility (or Generator) — Month — Day — Year

19. Hazardous Waste Report Management Method Codes (i.e., codes for hazardous waste treatment, disposal, and recycling systems)

1.	2.	3.	4.

20. Designated Facility Owner or Operator: Certification of receipt of hazardous materials covered by the manifest except as noted in Item 18a

Printed/Typed Name — Signature — Month — Day — Year

EPA Form 8700-22 (Rev. 3-05) Previous editions are obsolete.

GENERATOR'S INITIAL COPY

CWMI

Please print or type. (Form designed for use on elite (12-pitch) typewriter.)

Form Approved. OMB No. 2050-0039

UNIFORM HAZARDOUS WASTE MANIFEST

1. Generator ID Number: EXEMPT
2. Page 1 of: 1
3. Emergency Response Phone:
4. Manifest Tracking Number: 002734153 GBF

GENERATOR

5. Generator's Name and Mailing Address
SOLUTIA, INC - ANNISTON PCB SITE
702 CLYDESDALE AVE
ANNISTON AL 36201
Generator's Phone: (601)607-1187

Generator's Site Address (if different than mailing address)

6. Transporter 1 Company Name: Robbie D Wood
U.S. EPA ID Number: ALD067138291

7. Transporter 2 Company Name
U.S. EPA ID Number

8. Designated Facility Name and Site Address
CHEMICAL WASTE MANAGEMENT, INC.
HIGHWAY 17 NORTH, MILE MARKER 163
EMELLE AL 35459
Facility's Phone: (205)652-9721
U.S. EPA ID Number: ALD000622464

9a. HM	9b. U.S. DOT Description (including Proper Shipping Name, Hazard Class, ID Number, and Packing Group (if any))	10. Containers No.	10. Containers Type	11. Total Quantity	12. Unit Wt./Vol.	13. Waste Codes
X	1. UN3432,RQ,POLYCHLORINATED BIPHENYLS,SOLID,9,III CM9879	001	DT	18000	K	
	2.					
	3.					
	4.					

14. Special Handling Instructions and Additional Information
1. CM9879 ERG-171 PO#: 4250786b OSD: 1-8-2016
ERI PROVIDER: CHEMTREC (CONTRACT CCN24117)

15. **GENERATOR'S/OFFEROR'S CERTIFICATION:** I hereby declare that the contents of this consignment are fully and accurately described above by the proper shipping name, and are classified, packaged, marked and labeled/placarded, and are in all respects in proper condition for transport according to applicable international and national governmental regulations. If export shipment and I am the Primary Exporter, I certify that the contents of this consignment conform to the terms of the attached EPA Acknowledgment of Consent.
I certify that the waste minimization statement identified in 40 CFR 262.27(a) (if I am a large quantity generator) or (b) (if I am a small quantity generator) is true.

Generator's/Offeror's Printed/Typed Name: DONN WILLIAMS
Signature:
Month: 1 Day: 8 Year: 16

INT'L

16. International Shipments ☐ Import to U.S. ☐ Export from U.S. Port of entry/exit:
Transporter signature (for exports only): Date leaving U.S.:

TRANSPORTER

17. Transporter Acknowledgment of Receipt of Materials

Transporter 1 Printed/Typed Name: Ernest Winston
Signature: Ernest Winston
Month: 1 Day: 8 Year: 16

Transporter 2 Printed/Typed Name
Signature
Month: Day: Year:

DESIGNATED FACILITY

18. Discrepancy

18a. Discrepancy Indication Space ☐ Quantity ☐ Type ☐ Residue ☐ Partial Rejection ☐ Full Rejection

Manifest Reference Number:

18b. Alternate Facility (or Generator)
U.S. EPA ID Number
Facility's Phone:

18c. Signature of Alternate Facility (or Generator)
Month: Day: Year:

19. Hazardous Waste Report Management Method Codes (i.e., codes for hazardous waste treatment, disposal, and recycling systems)

1.	2.	3.	4.

20. Designated Facility Owner or Operator: Certification of receipt of hazardous materials covered by the manifest except as noted in Item 18a

Printed/Typed Name
Signature
Month: Day: Year:

EPA Form 8700-22 (Rev. 3-05) Previous editions are obsolete.

GENERATOR'S INITIAL COPY

Boy # 3530 1205223 CWMI

Please print or type. (Form designed for use on elite (12-pitch) typewriter.) Form Approved. OMB No. 2050-0039

UNIFORM HAZARDOUS WASTE MANIFEST

1. Generator ID Number: EXEMPT
2. Page 1 of: 1
3. Emergency Response Phone:
4. Manifest Tracking Number: 002734154 GBF

GENERATOR

5. Generator's Name and Mailing Address:
SOLUTIA, INC - ANNISTON PCB SITE
702 CLYDESDALE AVE
ANNISTON AL 36201
Generator's Phone: (601)607-1187

Generator's Site Address (if different than mailing address):

6. Transporter 1 Company Name: Robbie D. Wood Inc — U.S. EPA ID Number: ALD067138891

7. Transporter 2 Company Name — U.S. EPA ID Number:

8. Designated Facility Name and Site Address:
CHEMICAL WASTE MANAGEMENT, INC.
HIGHWAY 17 NORTH, MILE MARKER 163
EMELLE AL 35459
Facility's Phone: (205)652-9721
U.S. EPA ID Number: ALD000622464

9a. HM	9b. U.S. DOT Description (including Proper Shipping Name, Hazard Class, ID Number, and Packing Group (if any))	10. Containers No.	10. Containers Type	11. Total Quantity	12. Unit Wt./Vol.	13. Waste Codes
X	1. UN3432,RQ,POLYCHLORINATED BIPHENYLS,SOLID,9,III CM9879	001	DT	18000	K	
	2.					
	3.					
	4.					

14. Special Handling Instructions and Additional Information
1. CM9879 ERG-171 PO#: 4255866 OSD: 1-8-2016
ERI PROVIDER: CHEMTREC (CONTRACT CCN24117)

15. **GENERATOR'S/OFFEROR'S CERTIFICATION:** I hereby declare that the contents of this consignment are fully and accurately described above by the proper shipping name, and are classified, packaged, marked and labeled/placarded, and are in all respects in proper condition for transport according to applicable international and national governmental regulations. If export shipment and I am the Primary Exporter, I certify that the contents of this consignment conform to the terms of the attached EPA Acknowledgment of Consent.
I certify that the waste minimization statement identified in 40 CFR 262.27(a) (if I am a large quantity generator) or (b) (if I am a small quantity generator) is true.

Generator's/Offeror's Printed/Typed Name: DONN WILLIAMS — Signature: D.W. Williams — Month: 1 — Day: 8 — Year: 2016

INT'L

16. International Shipments ☐ Import to U.S. ☐ Export from U.S. Port of entry/exit:
Transporter signature (for exports only): Date leaving U.S.:

TRANSPORTER

17. Transporter Acknowledgment of Receipt of Materials

Transporter 1 Printed/Typed Name: Charles W. Cutler — Signature: Charles W. Cutler — Month: 01 — Day: 08 — Year: 16

Transporter 2 Printed/Typed Name — Signature — Month — Day — Year

DESIGNATED FACILITY

18. Discrepancy

18a. Discrepancy Indication Space ☐ Quantity ☐ Type ☐ Residue ☐ Partial Rejection ☐ Full Rejection

Manifest Reference Number:

18b. Alternate Facility (or Generator) — U.S. EPA ID Number
Facility's Phone:

18c. Signature of Alternate Facility (or Generator) — Month — Day — Year

19. Hazardous Waste Report Management Method Codes (i.e., codes for hazardous waste treatment, disposal, and recycling systems)

1.	2.	3.	4.

20. Designated Facility Owner or Operator: Certification of receipt of hazardous materials covered by the manifest except as noted in Item 18a

Printed/Typed Name — Signature — Month — Day — Year

EPA Form 8700-22 (Rev. 3-05) Previous editions are obsolete.

GENERATOR'S INITIAL COPY

CWMI

Please print or type. (Form designed for use on elite (12-pitch) typewriter.)

Form Approved. OMB No. 2050-0039

UNIFORM HAZARDOUS WASTE MANIFEST

1. Generator ID Number: EXEMPT
2. Page 1 of
3. Emergency Response Phone: 770 [illegible] 4669
4. Manifest Tracking Number: 002916289 GBF

GENERATOR

5. Generator's Name and Mailing Address:
SOLUTIA, INC - ANNISTON PCB SITE
702 CLYDESDALE AVE
ANNISTON AL 36201
Generator's Phone: (601)607-1187

Generator's Site Address (if different than mailing address):
ANNISTON PCB SITE
0 PARKWIN
ANNISTON AL 36201

6. Transporter 1 Company Name: Lobello Wood Inc
U.S. EPA ID Number: ALD 981123591

7. Transporter 2 Company Name:
U.S. EPA ID Number:

8. Designated Facility Name and Site Address:
CHEMICAL WASTE MANAGEMENT, INC.
HIGHWAY 17 NORTH, MILE MARKER 163
EMELLE AL 35459
Facility's Phone: (205)652-9721
U.S. EPA ID Number: ALD000622464

9a. HM	9b. U.S. DOT Description (including Proper Shipping Name, Hazard Class, ID Number, and Packing Group (if any))	10. Containers No.	10. Containers Type	11. Total Quantity	12. Unit Wt./Vol.	13. Waste Codes
X	1. UN3432,RQ,POLYCHLORINATED BIPHENYLS,SOLID,9,III CM9879	001	CM	18000	K	
	2.					
	3.					
	4.					

14. Special Handling Instructions and Additional Information
1. CM9879 ERG-171 PO#: OSD: 9/7/16 Box 6056
ERI PROVIDER: CHEMTREC (CONTRACT CCN24117)

15. **GENERATOR'S/OFFEROR'S CERTIFICATION:** I hereby declare that the contents of this consignment are fully and accurately described above by the proper shipping name, and are classified, packaged, marked and labeled/placarded, and are in all respects in proper condition for transport according to applicable international and national governmental regulations. If export shipment and I am the Primary Exporter, I certify that the contents of this consignment conform to the terms of the attached EPA Acknowledgment of Consent.
I certify that the waste minimization statement identified in 40 CFR 262.27(a) (if I am a large quantity generator) or (b) (if I am a small quantity generator) is true.

Generator's/Offeror's Printed/Typed Name: DONN WILLIAMS
Signature: [signature]
Month: 9 Day: 17 Year: 16

INT'L

16. International Shipments ☐ Import to U.S. ☐ Export from U.S. Port of entry/exit:
Transporter signature (for exports only): Date leaving U.S.:

TRANSPORTER

17. Transporter Acknowledgment of Receipt of Materials

Transporter 1 Printed/Typed Name: Randy Gunter
Signature: [signature]
Month: 9 Day: 19 Year: 16

Transporter 2 Printed/Typed Name:
Signature:
Month: Day: Year:

DESIGNATED FACILITY

18. Discrepancy

18a. Discrepancy Indication Space ☐ Quantity ☐ Type ☐ Residue ☐ Partial Rejection ☐ Full Rejection

Manifest Reference Number:

18b. Alternate Facility (or Generator)
U.S. EPA ID Number
Facility's Phone:

18c. Signature of Alternate Facility (or Generator)
Month: Day: Year:

19. Hazardous Waste Report Management Method Codes (i.e., codes for hazardous waste treatment, disposal, and recycling systems)

1.	2.	3.	4.

20. Designated Facility Owner or Operator: Certification of receipt of hazardous materials covered by the manifest except as noted in Item 18a

Printed/Typed Name:
Signature:
Month: Day: Year:

EPA Form 8700-22 (Rev. 3-05) Previous editions are obsolete.

GENERATOR'S INITIAL COPY

APPENDIX D1.5

Autoclave Unit Area

Box 5002

CWMI

Please print or type. (Form designed for use on elite (12-pitch) typewriter.)

Form Approved. OMB No. 2050-0039

UNIFORM HAZARDOUS WASTE MANIFEST

1. Generator ID Number: EXEMPT
2. Page 1 of 1
3. Emergency Response Phone:
4. Manifest Tracking Number: 002666515 GBF

5. Generator's Name and Mailing Address:
SOLUTIA, INC - ANNISTON PCB SITE
702 CLYDESDALE AVE
ANNISTON AL 35201
Generator's Phone: (601)807-1187

Generator's Site Address (if different than mailing address):

6. Transporter 1 Company Name: Robbie D Wood Inc
U.S. EPA ID Number: ALD 067138891

7. Transporter 2 Company Name:
U.S. EPA ID Number:

8. Designated Facility Name and Site Address:
CHEMICAL WASTE MANAGEMENT, INC.
HIGHWAY 17 NORTH, MILE MARKER 163
EMELLE AL 35459
Facility's Phone: (205)652-9721
U.S. EPA ID Number: ALD000622464

9a. HM	9b. U.S. DOT Description (including Proper Shipping Name, Hazard Class, ID Number, and Packing Group (if any))	10. Containers No.	10. Containers Type	11. Total Quantity	12. Unit Wt./Vol.	13. Waste Codes
X	1. UN3432,RQ,POLYCHLORINATED BIPHENYLS,SOLID,9,III CM9879	001	DT	18000	K	
	2.					
	3.					
	4.					

14. Special Handling Instructions and Additional Information
1. CM9879 ERG-171 PO#: 90557866 OSD: 8/19/15
ERI PROVIDER: CHEMTREC (CONTRACT CCN24117) Auto Clave

15. **GENERATOR'S/OFFEROR'S CERTIFICATION:** I hereby declare that the contents of this consignment are fully and accurately described above by the proper shipping name, and are classified, packaged, marked and labeled/placarded, and are in all respects in proper condition for transport according to applicable international and national governmental regulations. If export shipment and I am the Primary Exporter, I certify that the contents of this consignment conform to the terms of the attached EPA Acknowledgment of Consent.
I certify that the waste minimization statement identified in 40 CFR 262.27(a) (if I am a large quantity generator) or (b) (if I am a small quantity generator) is true.

Generator's/Offeror's Printed/Typed Name: DONN WILLIAMS
Signature: D.W. Williams
Month 8 Day 17 Year 15

16. International Shipments ☐ Import to U.S. ☐ Export from U.S. Port of entry/exit:
Transporter signature (for exports only): Date leaving U.S.:

17. Transporter Acknowledgment of Receipt of Materials
Transporter 1 Printed/Typed Name: [illegible]
Signature: [illegible]
Month 8 Day 19 Year 15
Transporter 2 Printed/Typed Name:
Signature:
Month Day Year

18. Discrepancy
18a. Discrepancy Indication Space ☐ Quantity ☐ Type ☐ Residue ☐ Partial Rejection ☐ Full Rejection
Manifest Reference Number:
18b. Alternate Facility (or Generator)
U.S. EPA ID Number
Facility's Phone:
18c. Signature of Alternate Facility (or Generator)
Month Day Year

19. Hazardous Waste Report Management Method Codes (i.e., codes for hazardous waste treatment, disposal, and recycling systems)
1. 2. 3. 4.

20. Designated Facility Owner or Operator: Certification of receipt of hazardous materials covered by the manifest except as noted in Item 18a
Printed/Typed Name
Signature
Month Day Year

GENERATOR / INT'L / TRANSPORTER / DESIGNATED FACILITY

EPA Form 8700-22 (Rev. 3-05) Previous editions are obsolete.

GENERATOR'S INITIAL COPY

ROBBIE D. WOOD, INC.

BOX OWNER RDW

ROLL-OFF BOX # 5002 SN# 65-76

TRACTOR # 356

DRIVER SIGNATURE [signature]

PICK-UP INFORMATION

DATE: 8/10/15 AM/PM

SHIPPER Monsanto

P/U CITY - ST. Thornton AR

CUSTOMER SIGNATURE [signature]

EMPTY ☐

LOADED ☒ MANIFEST # 00246535-8

DRIVERS: WHEN FILLING OUT THIS FORM, WRITE ON HARD SURFACE, PRESS FIRMLY WITH BALL-POINT

LOAD # 1195963

DELIVERY INFORMATION

DATE: _____ AM/PM

LOADED BOX

Unloaded at _____

Drop Loaded at _____

Box returned to: _____

EMPTY BOX DELIVERED TO:

CONSIGNEE _____

CITY, ST _____

CUSTOMER SIGNATURE _____

Indicate below any damage done to roll-off box by circling that portion on the drawing below.

Condition of Tarp: OK

Condition of Bows: OK

No. Bows 6

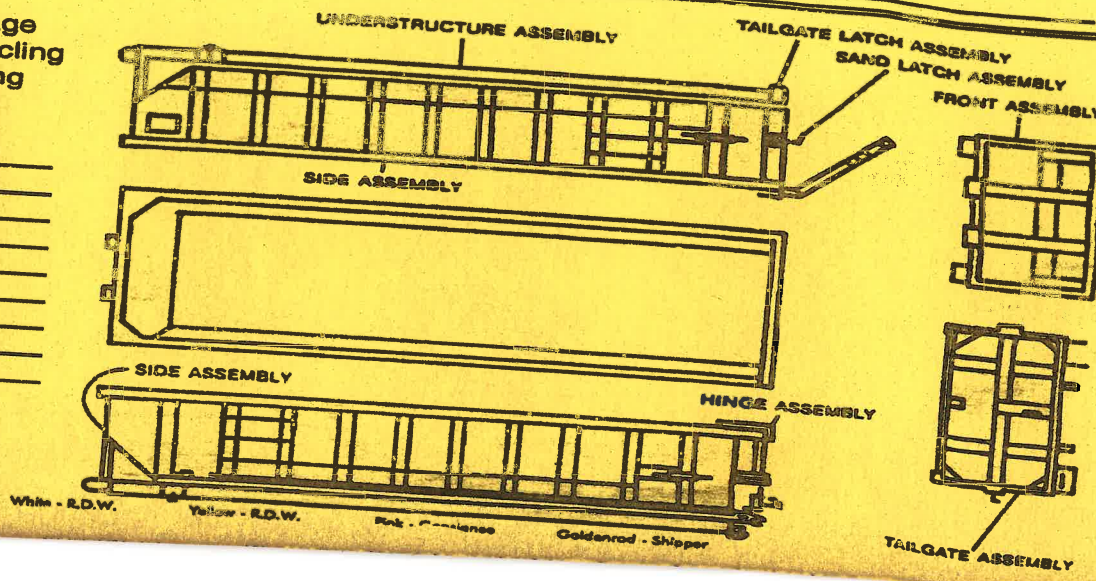

White - R.D.W. Yellow - R.D.W. Pink - Goldenrod - Shipper

= Robbie D. Wood, Inc. =

P.O. BOX 125 DOLOMITE, ALABAMA 35061

BILL OF LADING

NO. MC 142393 166610

SHIPPER Monsanto	LOADING CITY/STATE Anniston AL		MANIFEST NO.
CONSIGNEE Chem Waste	DESTINATION Emell AL		002666515 6BF
	TRACTOR NO.	TRAILER NO.	BOX NO.	DATE SHIPPED 8/19/15
	384	1619		LOAD NO. 1195868

COMP NO	LOADING TEMP ° F	COMMODITY	UNIT	QUANTITY
		Swap out		

QUANTITY	
	Gross
	Tare
	Net
	Tons

LOADING TIME

IN M.

OUT M. AUTHORIZATION - LOADING DEMURRAGE

— — — — — — — — — — DENTENTION RECORD — — — EXPLAIN TIME SPENT — — — —

UNLOADING TIME

IN M.

OUT M. AUTHORIZATION - UNLOADING DEMURRAGE

GOVERNED BY TARIFFS AND CLASSIFICATIONS ISSUED BY THE CARRIER AND/OR ITS AGENTS

SHIPPER PER [signature]

CARRIER PER [signature]

RECEIVED THE ABOVE-DESCRIBED PROPERTY IN GOOD CONDITION EXCEPT AS NOTED

FIRM

BY

SHOW COMPLETE COMPANY NAME AND SIGNATURE INITIALS NOT ACCEPTED

DELIVERY DATE

White - R. D. W. Yellow - R. D. W. Pink - Consignee Goldenrod - Shipper

Eaton Printing 112602 426-2647

WM
Chemical Waste Managment
P.O. Box 55
36964 Alabama Hwy 17
Emelle, AL 35459-0055
(205)652-9721

Manifest Document Number:

SOLUTIA INC
702 CLYDESDALE AVE

ANNISTON, AL 36201-5328

Attn: DONN WILLIAMS

Site Information

SOLUTIA
702 CLYDESDALE AVE

ANNISTON, AL 36201-5328

CERTIFICATE OF DISPOSAL

Chemical Waste Management, Inc. (ALD000622464) has received PCB material from
SOLUTIA

as described on Hazardous Waste Manifest Number 002666516GBF-1
Waste Management, Inc. hereby certifies that the above described material (excluding PCB liquids, if applicable) was landfilled on the dates shown below, in compliance with State and Federal Regulations.

Under civil and criminal penalties of law for the making or submission of false or fraudulent statements or representation (18 U.S.C. 1001 and 15 U.S.C. 2615), I certify that the information contained in or accompanying this document is true, accurate and complete. As to the identified section(s) of this document for which I cannot personally verify truth and accuracy, I certify as the company official having supervisory responsibility for the persons who, acting under my direct instructions, made the verification that this information is true, accurate and complete.

Al Talbott/cm

Al Talbott, Safety Manager
September 12, 2015

OSD	Unique ID	Cont #	Profile	Disposed	Description
8/17/15	002666516GBF-01	1	CM9879	9/4/15	ANNISTON PCB SITE CONSENT DECR

Load # 1196365 Box # 25160 CWMI

Please print or type. (Form designed for use on elite (12-pitch) typewriter.) Form Approved. OMB No. 2050-0039

UNIFORM HAZARDOUS WASTE MANIFEST

1. Generator ID Number: EXEMPT
2. Page 1 of: 1
3. Emergency Response Phone:
4. Manifest Tracking Number: 002666516 GBF

GENERATOR

5. Generator's Name and Mailing Address
SOLUTIA, INC - ANNISTON PCB SITE
702 CLYDESDALE AVE
ANNISTON AL 36201
Generator's Phone: (601)807-1187

Generator's Site Address (if different than mailing address)

6. Transporter 1 Company Name: Robbie D Woods INC
U.S. EPA ID Number: ALD067138891

7. Transporter 2 Company Name
U.S. EPA ID Number

8. Designated Facility Name and Site Address
CHEMICAL WASTE MANAGEMENT, INC.
HIGHWAY 17 NORTH, MILE MARKER 163
EMELLE AL 35459
Facility's Phone: (205)652-9721
U.S. EPA ID Number: ALD000622464

9a. HM	9b. U.S. DOT Description (including Proper Shipping Name, Hazard Class, ID Number, and Packing Group (if any))	10. Containers No.	10. Containers Type	11. Total Quantity	12. Unit Wt./Vol.	13. Waste Codes
X	1. UN3432,RQ,POLYCHLORINATED BIPHENYLS,SOLID,9,III CM9879	001	DM	15894 ~~18000~~	K	
	2.			JB 9/4/15		
	3.					
	4.					

14. Special Handling Instructions and Additional Information
1. CM9879 ERG-171 PO#: 4253786 OSD: 8/17/2015
ERI PROVIDER: CHEMTREC (CONTRACT CCN24117) Auto Clave Can # 25160

15. **GENERATOR'S/OFFEROR'S CERTIFICATION:** I hereby declare that the contents of this consignment are fully and accurately described above by the proper shipping name, and are classified, packaged, marked and labeled/placarded, and are in all respects in proper condition for transport according to applicable international and national governmental regulations. If export shipment and I am the Primary Exporter, I certify that the contents of this consignment conform to the terms of the attached EPA Acknowledgment of Consent.
I certify that the waste minimization statement identified in 40 CFR 262.27(a) (if I am a large quantity generator) or (b) (if I am a small quantity generator) is true.

Generator's/Offeror's Printed/Typed Name: DONN WILLIAMS
Signature: DW
Month: 9 Day: 25 Year: 15

INT'L

16. International Shipments ☐ Import to U.S. ☐ Export from U.S. Port of entry/exit:
Transporter signature (for exports only): Date leaving U.S.:

TRANSPORTER

17. Transporter Acknowledgment of Receipt of Materials

Transporter 1 Printed/Typed Name: Freddie Lee Williams
Signature: Freddie Lee Williams
Month: 08 Day: 25 Year: 15

Transporter 2 Printed/Typed Name
Signature
Month: Day: Year:

DESIGNATED FACILITY

18. Discrepancy

18a. Discrepancy Indication Space ☑ Quantity ☐ Type ☐ Residue ☐ Partial Rejection ☐ Full Rejection
Corrected to recv'd kg wt. JB 9/4/15
Manifest Reference Number:

18b. Alternate Facility (or Generator)
U.S. EPA ID Number
Facility's Phone:

18c. Signature of Alternate Facility (or Generator)
Month: Day: Year:

19. Hazardous Waste Report Management Method Codes (i.e., codes for hazardous waste treatment, disposal, and recycling systems)

1.	2.	3.	4.
H132			

20. Designated Facility Owner or Operator: Certification of receipt of hazardous materials covered by the manifest except as noted in Item 18a

Printed/Typed Name: Judy Bankhead
Signature: Judy Bankhead
Month: 09 Day: 04 Year: 15

EPA Form 8700-22 (Rev. 3-05) Previous editions are obsolete.

DESIGNATED FACILITY TO GENERATOR

23933

PRIORITY PRINTING - MERIDIAN, MISSISSIPPI

WASTE MANAGEMENT

Waste Management
Emelle Facility
WEIGHED ON CARDINAL SCALES

436421

GROSS 70020 lb
10:52AM 09/04/2015

GROSS
TARE
NET

GROSS 34980 lb
11:38AM 09/04/2015

35040
15894kg

Customer: Solutia

Transporter: RDW

Truck #: 204 Trailer #: 25160

Receipt #: 508335 Manifest #: 002666516GBF

DIGITAL WEIGHT INDICATOR & PRINTER

WEIGHED BY: JB

FORM 510

Chemical Waste Management
P.O. Box 55
36964 Alabama Hwy 17
Emelle, AL 35459-0055
(205)652-9721

SOLUTIA INC
702 CLYDESDALE AVE

ANNISTON,AL 36201-5328

Attn: DONN WILLIAMS

Site Infomation

SOLUTIA
702 CLYDESDALE AVE

ANNISTON,AL 36201-5328

ACKNOWLEDGEMENT OF RECEIPT OF WASTE SHIPMENT

Generator Name: SOLUTIA
Enclosed is/are your Generator Number Two copy / copies for Alabama Manifest Numbers:

002666516GBF

This copy is to acknowledge that Chemical Waste Management, Inc., of Emelle, Alabama has received your shipment. As a requirement of 40 CFR 264.12 (b), this letter serves to inform you that this facility has the proper permits and will accept your shipment upon completion of waste analysis procedures specified in the facility's Waste Analysis Plan and as determined in the approval waste profile submitted for this/these wastes.

As of September 26, 1997, Chemical Waste Management, Inc., Emelle Alabama (ALD000622464) is operating under a AHWMMA Permit, issued by the Alabama Department of Environmental Management. (RCRA)

Al Talbott
Safety Manager

September 12, 2015

WM
Chemical Waste Managment
P.O. Box 55
36964 Alabama Hwy 17
Emelle, AL 35459-0055
(205)652-9721

Manifest Document Number:

SOLUTIA INC
702 CLYDESDALE AVE

ANNISTON, AL 36201-5328

Attn: DONN WILLIAMS

Site Information

SOLUTIA
702 CLYDESDALE AVE

ANNISTON, AL 36201-5328

CERTIFICATE OF DISPOSAL

Chemical Waste Management, Inc. (ALD000622464) has received PCB material from
SOLUTIA

as described on Hazardous Waste Manifest Number 002666517GBF-1
Waste Management, Inc. hereby certifies that the above described material (excluding PCB liquids, if applicable) was landfilled on the dates shown below, in compliance with State and Federal Regulations.

Under civil and criminal penalties of law for the making or submission of false or fraudulent statements or representation (18 U.S.C. 1001 and 15 U.S.C. 2615), I certify that the information contained in or accompanying this document is true, accurate and complete. As to the identified section(s) of this document for which I cannot personally verify truth and accuracy, I certify as the company official having supervisory responsibility for the persons who, acting under my direct instructions, made the verification that this information is true, accurate and complete.

Al Talbott/cm

Al Talbott, Safety Manager
September 12, 2015

OSD	Unique ID	Cont #	Profile	Disposed	Description
8/25/15	002666517GBF-01	1	CM9879	9/10/15	ANNISTON PCB SITE CONSENT DECR

Box # 497 Load # 1196364 CWMI

Please print or type. (Form designed for use on elite (12-pitch) typewriter.) Form Approved. OMB No. 2050-0039

UNIFORM HAZARDOUS WASTE MANIFEST

1. Generator ID Number	2. Page 1 of	3. Emergency Response Phone	4. Manifest Tracking Number
EXEMPT	1	770-337-4669	002666517 GBF

GENERATOR

5. Generator's Name and Mailing Address
SOLUTIA, INC - ANNISTON PCB SITE
702 CLYDESDALE AVE
ANNISTON AL 36201
Generator's Phone: (601)807-1187

Generator's Site Address (if different than mailing address)

6. Transporter 1 Company Name: Bobbie D. Wood Inc. U.S. EPA ID Number: ADO67138891

7. Transporter 2 Company Name: U.S. EPA ID Number:

8. Designated Facility Name and Site Address
CHEMICAL WASTE MANAGEMENT, INC.
HIGHWAY 17 NORTH, MILE MARKER 163
EMELLE AL 35459
Facility's Phone: (205)652-9721
U.S. EPA ID Number: ALD000622464

9a. HM	9b. U.S. DOT Description (including Proper Shipping Name, Hazard Class, ID Number, and Packing Group (if any))	10. Containers No.	10. Containers Type	11. Total Quantity	12. Unit Wt./Vol.	13. Waste Codes
X	1. UN3432,RQ,POLYCHLORINATED BIPHENYLS,SOLID,9,III CM9879	001	CM	~~18000~~ 15,749 JB	K	
	2.					
	3.					
	4.					

14. Special Handling Instructions and Additional Information
1. CM9879 ERG-171 PO#: 4255786 OSD: 8/25/15
ERI PROVIDER: CHEMTREC (CONTRACT CCN24117) Autolane

15. **GENERATOR'S/OFFEROR'S CERTIFICATION:** I hereby declare that the contents of this consignment are fully and accurately described above by the proper shipping name, and are classified, packaged, marked and labeled/placarded, and are in all respects in proper condition for transport according to applicable international and national governmental regulations. If export shipment and I am the Primary Exporter, I certify that the contents of this consignment conform to the terms of the attached EPA Acknowledgment of Consent.
I certify that the waste minimization statement identified in 40 CFR 262.27(a) (if I am a large quantity generator) or (b) (if I am a small quantity generator) is true.

Generator's/Offeror's Printed/Typed Name: DONN WILLIAMS Signature: DW. Williams Month: 8 Day: 25 Year: 15

INT'L

16. International Shipments ☐ Import to U.S. ☐ Export from U.S. Port of entry/exit:
Transporter signature (for exports only): Date leaving U.S.:

TRANSPORTER

17. Transporter Acknowledgment of Receipt of Materials

Transporter 1 Printed/Typed Name: Freddie Lee Williams Signature: Freddie Lee Williams Month: 08 Day: 25 Year: 15

Transporter 2 Printed/Typed Name: Signature: Month: Day: Year:

DESIGNATED FACILITY

18. Discrepancy

18a. Discrepancy Indication Space ☒ Quantity ☐ Type ☐ Residue ☐ Partial Rejection ☐ Full Rejection

Correct to received by wt per Donn Williams. JB 9/10/15 Manifest Reference Number:

18b. Alternate Facility (or Generator) U.S. EPA ID Number:
Facility's Phone:

18c. Signature of Alternate Facility (or Generator) Month: Day: Year:

19. Hazardous Waste Report Management Method Codes (i.e., codes for hazardous waste treatment, disposal, and recycling systems)

1.	2.	3.	4.
M132			

20. Designated Facility Owner or Operator: Certification of receipt of hazardous materials covered by the manifest except as noted in Item 18a

Printed/Typed Name: Mel Alexander Signature: Mel Alexander Month: 9 Day: 10 Year: 15

EPA Form 8700-22 (Rev. 3-05) Previous editions are obsolete.

DESIGNATED FACILITY TO GENERATOR

23933

PRIORITY PRINTING - MERIDIAN, MISSISSIPPI

WASTE MANAGEMENT

Waste Management
Emelle Facility
WEIGHED ON CARDINAL SCALES

436156

GROSS 70880 lb

02:29PM 09/10/2015

GROSS 36160 lb

03:57PM 09/10/2015

34720

GROSS
TARE
NET

Customer: Solutia

Transporter: ADW

Truck #: 204 Trailer #: 497

15749K

Receipt #: 508437 Manifest #: 002666517 GBF

DIGITAL WEIGHT INDICATOR & PRINTER

WEIGHED BY MX

FORM 510

Chemical Waste Management
P.O. Box 55
36964 Alabama Hwy 17
Emelle, AL 35459-0055
(205)652-9721

SOLUTIA INC
702 CLYDESDALE AVE

ANNISTON,AL 36201-5328

Attn: DONN WILLIAMS

Site Infomation

SOLUTIA
702 CLYDESDALE AVE

ANNISTON,AL 36201-5328

ACKNOWLEDGEMENT OF RECEIPT OF WASTE SHIPMENT

Generator Name: SOLUTIA
Enclosed is/are your Generator Number Two copy / copies for Alabama Manifest Numbers:

002666517GBF

This copy is to acknowledge that Chemical Waste Management, Inc., of Emelle, Alabama has received your shipment. As a requirement of 40 CFR 264.12 (b), this letter serves to inform you that this facility has the proper permits and will accept your shipment upon completion of waste analysis procedures specified in the facility's Waste Analysis Plan and as determined in the approval waste profile submitted for this/these wastes.

As of September 26, 1997, Chemical Waste Management, Inc., Emelle Alabama (ALD000622464) is operating under a AHWMMA Permit, issued by the Alabama Department of Environmental Management. (RCRA)

Al Talbott
Safety Manager

September 12, 2015

WM
Chemical Waste Managment
P.O. Box 55
36964 Alabama Hwy 17
Emelle, AL 35459-0055
(205)652-9721

Manifest Document Number:

SOLUTIA INC
702 CLYDESDALE AVE

ANNISTON, AL 36201-5328

Attn: DONN WILLIAMS

Site Information

SOLUTIA
702 CLYDESDALE AVE

ANNISTON, AL 36201-5328

CERTIFICATE OF DISPOSAL

Chemical Waste Management, Inc. (ALD000622464) has received PCB material from
SOLUTIA

as described on Hazardous Waste Manifest Number 002666518GBF-1
Waste Management, Inc. hereby certifies that the above described material (excluding PCB liquids, if applicable) was landfilled on the dates shown below, in compliance with State and Federal Regulations.

Under civil and criminal penalties of law for the making or submission of false or fraudulent statements or representation (18 U.S.C. 1001 and 15 U.S.C. 2615), I certify that the information contained in or accompanying this document is true, accurate and complete. As to the identified section(s) of this document for which I cannot personally verify truth and accuracy, I certify as the company official having supervisory responsibility for the persons who, acting under my direct instructions, made the verification that this information is true, accurate and complete.

Al Talbott / om

Al Talbott, Safety Manager
August 29, 2015

QSD	Unique ID	Cont #	Profile	Disposed	Description
8/20/15	002666518GBF-01	1	CM9879	8/25/15	ANNISTON PCB SITE CONSENT DECR

Box# 2020

CWMI

Please print or type. (Form designed for use on elite (12-pitch) typewriter.)

Form Approved. OMB No. 2050-0039

UNIFORM HAZARDOUS WASTE MANIFEST

1. Generator ID Number: EXEMPT
2. Page 1 of 1
3. Emergency Response Phone: 770-337-4669
4. Manifest Tracking Number: 002666518 GBF

5. Generator's Name and Mailing Address
SOLUTIA, INC - ANNISTON PCB SITE
702 CLYDESDALE AVE
ANNISTON AL 36201
Generator's Phone: (601)807-1187

Generator's Site Address (if different than mailing address)

6. Transporter 1 Company Name: Robbie D. Wood Inc
U.S. EPA ID Number: AL0067138891

7. Transporter 2 Company Name
U.S. EPA ID Number

8. Designated Facility Name and Site Address
CHEMICAL WASTE MANAGEMENT, INC.
HIGHWAY 17 NORTH, MILE MARKER 163
EMELLE AL 35459
Facility's Phone: (205)652-9721
U.S. EPA ID Number: ALD000622464

9a. HM	9b. U.S. DOT Description (including Proper Shipping Name, Hazard Class, ID Number, and Packing Group (if any))	10. Containers No.	10. Containers Type	11. Total Quantity	12. Unit Wt./Vol.	13. Waste Codes
X	1. UN3432,RQ,POLYCHLORINATED BIPHENYLS,SOLID,9,III CM9870	001	DT CM	~~18900~~ 13,142 JB 8/25/15	K	
	2.					
	3.					
	4.					

14. Special Handling Instructions and Additional Information
1. CM9870 ERG-171 PO#: 42557866 OSD: 8/20/15
ERI PROVIDER: CHEMTREC (CONTRACT CCN24117) Auto Clave

15. **GENERATOR'S/OFFEROR'S CERTIFICATION:** I hereby declare that the contents of this consignment are fully and accurately described above by the proper shipping name, and are classified, packaged, marked and labeled/placarded, and are in all respects in proper condition for transport according to applicable international and national governmental regulations. If export shipment and I am the Primary Exporter, I certify that the contents of this consignment conform to the terms of the attached EPA Acknowledgment of Consent.
I certify that the waste minimization statement identified in 40 CFR 262.27(a) (if I am a large quantity generator) or (b) (if I am a small quantity generator) is true.

Generator's/Offeror's Printed/Typed Name: DONN WILLIAMS
Signature: D Williams
Month 8 Day 20 Year 15

16. International Shipments ☐ Import to U.S. ☐ Export from U.S. Port of entry/exit:
Transporter signature (for exports only): Date leaving U.S.:

17. Transporter Acknowledgment of Receipt of Materials
Transporter 1 Printed/Typed Name: Earnest Winston
Signature: Earnest Winston
Month 8 Day 20 Year 15
Transporter 2 Printed/Typed Name
Signature
Month Day Year

18. Discrepancy
18a. Discrepancy Indication Space ☒ Quantity ☐ Type ☐ Residue ☐ Partial Rejection ☐ Full Rejection
Added record not per Donn Williams. JB 8/25/15
Manifest Reference Number:

18b. Alternate Facility (or Generator)
U.S. EPA ID Number
Facility's Phone:

18c. Signature of Alternate Facility (or Generator)
Month Day Year

19. Hazardous Waste Report Management Method Codes (i.e., codes for hazardous waste treatment, disposal, and recycling systems)
1. H132 2. 3. 4.

20. Designated Facility Owner or Operator: Certification of receipt of hazardous materials covered by the manifest except as noted in Item 18a
Printed/Typed Name: Mal Alexander
Signature: Mal Alexander
Month 8 Day 25 Year 15

GENERATOR / INT'L / TRANSPORTER / DESIGNATED FACILITY

EPA Form 8700-22 (Rev. 3-05) Previous editions are obsolete.

DESIGNATED FACILITY TO GENERATOR

23933

PRIORITY PRINTING - MERIDIAN, MISSISSIPPI

WASTE MANAGEMENT

Waste Management
Emelle Facility
WEIGHED ON CARDINAL SCALES

436703

GROSS 64520 lb
09:30AM 08/25/2015

GROSS 35480 lb
02:52PM 08/25/2015

29040

GROSS
TARE
NET

Customer: Solutia

Transporter: RDW

13172 K

Truck #: 204 Trailer #: 2020

Receipt #: 508087 Manifest #: OD2666518GBF

DIGITAL WEIGHT INDICATOR & PRINTER
WEIGHED BY MA

FORM 510

Chemical Waste Management
P.O. Box 55
36964 Alabama Hwy 17
Emelle, AL 35459-0055
(205)652-9721

SOLUTIA INC
702 CLYDESDALE AVE

ANNISTON,AL 36201-5328

Attn: DONN WILLIAMS

Site Infomation

SOLUTIA
702 CLYDESDALE AVE

ANNISTON,AL 36201-5328

ACKNOWLEDGEMENT OF RECEIPT OF WASTE SHIPMENT

Generator Name: SOLUTIA
Enclosed is/are your Generator Number Two copy / copies for Alabama Manifest Numbers:

002666518GBF

This copy is to acknowledge that Chemical Waste Management, Inc., of Emelle, Alabama has received your shipment. As a requirement of 40 CFR 264.12 (b), this letter serves to inform you that this facility has the proper permits and will accept your shipment upon completion of waste analysis procedures specified in the facility's Waste Analysis Plan and as determined in the approval waste profile submitted for this/these wastes.

As of September 26, 1997, Chemical Waste Management, Inc., Emelle Alabama (ALD000622464) is operating under a AHWMMA Permit, issued by the Alabama Department of Environmental Management. (RCRA)

Al Talbott
Safety Manager

August 29, 2015

Box 20.

CWMI

Please print or type. (Form designed for use on elite (12-pitch) typewriter.)

Form Approved. OMB No. 2050-0039

UNIFORM HAZARDOUS WASTE MANIFEST

1. Generator ID Number: EXEMPT

2. Page 1 of

3. Emergency Response Phone: 770-[illegible]

4. Manifest Tracking Number: 002666518 GBF

5. Generator's Name and Mailing Address
SOLUTIA, INC - ANNISTON PCB SITE
702 CLYDESDALE AVE
ANNISTON AL 36201
Generator's Phone: (601)607-1187

Generator's Site Address (if different than mailing address)

6. Transporter 1 Company Name: Robbie D. Wood Inc

U.S. EPA ID Number: MD067138891

7. Transporter 2 Company Name

U.S. EPA ID Number

8. Designated Facility Name and Site Address
CHEMICAL WASTE MANAGEMENT, INC.
HIGHWAY 17 NORTH, MILE MARKER 163
EMELLE AL 35459
Facility's Phone: (205)652-9721

U.S. EPA ID Number: ALD000622464

9a. HM	9b. U.S. DOT Description (including Proper Shipping Name, Hazard Class, ID Number, and Packing Group (if any))	10. Containers No.	10. Containers Type	11. Total Quantity	12. Unit Wt./Vol.	13. Waste Codes
X	1. UN3432,RQ,POLYCHLORINATED BIPHENYLS,SOLID,9,III CM9879	001	DT	18000	K	
	2.					
	3.					
	4.					

14. Special Handling Instructions and Additional Information
1. CM9879 ERG-171 PO#: 42557566 OSD: 8/20/15
ERI PROVIDER: CHEMTREC (CONTRACT CCN24117) Auto Clave

15. **GENERATOR'S/OFFEROR'S CERTIFICATION:** I hereby declare that the contents of this consignment are fully and accurately described above by the proper shipping name, and are classified, packaged, marked and labeled/placarded, and are in all respects in proper condition for transport according to applicable international and national governmental regulations. If export shipment and I am the Primary Exporter, I certify that the contents of this consignment conform to the terms of the attached EPA Acknowledgment of Consent.
I certify that the waste minimization statement identified in 40 CFR 262.27(a) (if I am a large quantity generator) or (b) (if I am a small quantity generator) is true.

Generator's/Offeror's Printed/Typed Name: DONN WILLIAMS
Signature: D Williams
Month 8 Day 20 Year 15

16. International Shipments ☐ Import to U.S. ☐ Export from U.S. Port of entry/exit:
Transporter signature (for exports only): Date leaving U.S.:

17. Transporter Acknowledgment of Receipt of Materials
Transporter 1 Printed/Typed Name: Earnest Winston
Signature: Earnest Winston
Month 8 Day 20 Year 15
Transporter 2 Printed/Typed Name
Signature
Month Day Year

18. Discrepancy
18a. Discrepancy Indication Space ☐ Quantity ☐ Type ☐ Residue ☐ Partial Rejection ☐ Full Rejection
Manifest Reference Number:
18b. Alternate Facility (or Generator)
U.S. EPA ID Number
Facility's Phone:
18c. Signature of Alternate Facility (or Generator)
Month Day Year

19. Hazardous Waste Report Management Method Codes (i.e., codes for hazardous waste treatment, disposal, and recycling systems)
1. 2. 3. 4.

20. Designated Facility Owner or Operator: Certification of receipt of hazardous materials covered by the manifest except as noted in Item 18a
Printed/Typed Name
Signature
Month Day Year

GENERATOR / INT'L / TRANSPORTER / DESIGNATED FACILITY

EPA Form 8700-22 (Rev. 3-05) Previous editions are obsolete.

GENERATOR'S INITIAL COPY

Robbie D. Wood, Inc.

P.O. BOX 125 DOLOMITE, ALABAMA 35061

BILL OF LADING NO. MC 142393 167096

SHIPPER Monsanto		LOADING CITY/STATE Hamilton AL		MANIFEST NO.
CONSIGNEE		DESTINATION Emelle AL		
	TRACTOR NO.	TRAILER NO.	BOX NO.	DATE SHIPPED 5-20-15
	5174	1655	2020	LOAD NO.

COMP NO	LOADING TEMP ° F	COMMODITY	UNIT	QUANTITY
		1 UN3432 NOS		

QUANTITY	
	Gross
	Tare
	Net
	Tons

LOADING TIME IN M.

OUT M. AUTHORIZATION - LOADING DEMURRAGE

— — — — — — — — — DENTENTION RECORD — — — EXPLAIN TIME SPENT — — — —

UNLOADING TIME IN M.

OUT M. AUTHORIZATION - UNLOADING DEMURRAGE

GOVERNED BY TARIFFS AND CLASSIFICATIONS ISSUED BY THE CARRIER AND/OR ITS AGENTS

SHIPPER PER

CARRIER PER

RECEIVED THE ABOVE-DESCRIBED PROPERTY IN GOOD CONDITION EXCEPT AS NOTED

FIRM

BY

SHOW COMPLETE COMPANY NAME AND SIGNATURE INITIALS NOT ACCEPTED

DELIVERY DATE

White - R. D. W. Yellow - R. D. W. Pink - Consignee Goldenrod - Shipper

Eaton Printing 112602 426-2647

Box# 1009 Box 1009

CWMI

Form Approved. OMB No. 2050-0039

Please print or type. (Form designed for use on elite (12-pitch) typewriter.)

UNIFORM HAZARDOUS WASTE MANIFEST

1. Generator ID Number: EXEMPT
2. Page 1 of 1
3. Emergency Response Phone:
4. Manifest Tracking Number: 002666519 GBF

5. Generator's Name and Mailing Address
SOLUTIA, INC - ANNISTON PCB SITE
702 CLYDESDALE AVE
ANNISTON AL 36201
Generator's Phone: (601)607-1187

Generator's Site Address (if different than mailing address):

6. Transporter 1 Company Name — U.S. EPA ID Number:

7. Transporter 2 Company Name — U.S. EPA ID Number:

8. Designated Facility Name and Site Address
CHEMICAL WASTE MANAGEMENT, INC.
HIGHWAY 17 NORTH, MILE MARKER 163
EMELLE AL 35459
Facility's Phone: (205)652-9721

U.S. EPA ID Number: ALD000622464

9a. HM	9b. U.S. DOT Description (including Proper Shipping Name, Hazard Class, ID Number, and Packing Group (if any))	10. Containers No.	10. Containers Type	11. Total Quantity	12. Unit Wt./Vol.	13. Waste Codes
X	1. UN3432,RQ,POLYCHLORINATED BIPHENYLS,SOLID,9,III CM9879	001	DT	18000	K	
	2.					
	3.					
	4.					

14. Special Handling Instructions and Additional Information
1. CM9879 ERG-171 PO#: 42557866 OSD: 8/20/15
ERI PROVIDER: CHEMTREC (CONTRACT CCN24117) Auto Clave

15. **GENERATOR'S/OFFEROR'S CERTIFICATION:** I hereby declare that the contents of this consignment are fully and accurately described above by the proper shipping name, and are classified, packaged, marked and labeled/placarded, and are in all respects in proper condition for transport according to applicable international and national governmental regulations. If export shipment and I am the Primary Exporter, I certify that the contents of this consignment conform to the terms of the attached EPA Acknowledgment of Consent.
I certify that the waste minimization statement identified in 40 CFR 262.27(a) (if I am a large quantity generator) or (b) (if I am a small quantity generator) is true.

Generator's/Offeror's Printed/Typed Name: DONN WILLIAMS — Signature: DW. Williams — Month 8 Day 20 Year 15

16. International Shipments ☐ Import to U.S. ☐ Export from U.S. Port of entry/exit:
Transporter signature (for exports only): Date leaving U.S.:

17. Transporter Acknowledgment of Receipt of Materials
Transporter 1 Printed/Typed Name: Charles McCallister — Signature: Charles McCallister — Month 08 Day 20 Year 15
Transporter 2 Printed/Typed Name: — Signature: — Month Day Year

18. Discrepancy
18a. Discrepancy Indication Space ☐ Quantity ☐ Type ☐ Residue ☐ Partial Rejection ☐ Full Rejection
Manifest Reference Number:

18b. Alternate Facility (or Generator) — U.S. EPA ID Number:
Facility's Phone:

18c. Signature of Alternate Facility (or Generator) — Month Day Year

19. Hazardous Waste Report Management Method Codes (i.e., codes for hazardous waste treatment, disposal, and recycling systems)
1. 2. 3. 4.

20. Designated Facility Owner or Operator: Certification of receipt of hazardous materials covered by the manifest except as noted in Item 18a
Printed/Typed Name — Signature — Month Day Year

GENERATOR — INT'L — TRANSPORTER — DESIGNATED FACILITY

EPA Form 8700-22 (Rev. 3-05) Previous editions are obsolete.

GENERATOR'S INITIAL COPY

WM
Chemical Waste Managment
P.O. Box 55
36964 Alabama Hwy 17
Emelle, AL 35459-0055
(205)652-9721

Manifest Document Number:

SOLUTIA INC
702 CLYDESDALE AVE

ANNISTON, AL 36201-5328

Attn: DONN WILLIAMS

Site Information

SOLUTIA
702 CLYDESDALE AVE

ANNISTON, AL 36201-5328

CERTIFICATE OF DISPOSAL

Chemical Waste Management, Inc. (ALD000622464) has received PCB material from
SOLUTIA

as described on Hazardous Waste Manifest Number 002666521GBF-1
Waste Management, Inc. hereby certifies that the above described material (excluding PCB liquids, if applicable) was landfilled on the dates shown below, in compliance with State and Federal Regulations.

Under civil and criminal penalties of law for the making or submission of false or fraudulent statements or representation (18 U.S.C. 1001 and 15 U.S.C. 2615), I certify that the information contained in or accompanying this document is true, accurate and complete. As to the identified section(s) of this document for which I cannot personally verify truth and accuracy, I certify as the company official having supervisory responsibility for the persons who, acting under my direct instructions, made the verification that this information is true, accurate and complete.

Al Talbott/dm

Al Talbott, Safety Manager
September 02, 2015

OSD	Unique ID	Cont #	Profile	Disposed	Description
8/20/15	002666521GBF-01	1	CM9879	8/31/15	ANNISTON PCB SITE CONSENT DECR

Box 2160

CWMI

Please print or type. (Form designed for use on elite (12-pitch) typewriter.)

Form Approved. OMB No. 2050-0039

UNIFORM HAZARDOUS WASTE MANIFEST

1. Generator ID Number: EXEMPT
2. Page 1 of 1
3. Emergency Response Phone: 770-537-4689
4. Manifest Tracking Number: 002666521 GBF

5. Generator's Name and Mailing Address
SOLUTIA, INC - ANNISTON PCB SITE
702 CLYDESDALE AVE
ANNISTON AL 36201
Generator's Phone: (601)807-1167

Generator's Site Address (if different than mailing address)

6. Transporter 1 Company Name: Robbie D. Wood — U.S. EPA ID Number: ALD067138891

7. Transporter 2 Company Name — U.S. EPA ID Number:

8. Designated Facility Name and Site Address
CHEMICAL WASTE MANAGEMENT, INC.
HIGHWAY 17 NORTH, MILE MARKER 163
EMELLE AL 35459
Facility's Phone: (205)652-9721
U.S. EPA ID Number: ALD000622464

9a. HM	9b. U.S. DOT Description (including Proper Shipping Name, Hazard Class, ID Number, and Packing Group (if any))	10. Containers No.	Type	11. Total Quantity	12. Unit Wt./Vol.	13. Waste Codes
X	1. UN3432,RQ,POLYCHLORINATED BIPHENYLS,SOLID,9,III CM9879	001	DT	10,384 ~~18000~~	K	
	2.			JB 8/31/15		
	3.					
	4.					

14. Special Handling Instructions and Additional Information
1. CM9879 ERG-171 PO#: 42557866 OSD: 8/20/15
ERI PROVIDER: CHEMTREC (CONTRACT CCN24117) Anita Clare

15. **GENERATOR'S/OFFEROR'S CERTIFICATION:** I hereby declare that the contents of this consignment are fully and accurately described above by the proper shipping name, and are classified, packaged, marked and labeled/placarded, and are in all respects in proper condition for transport according to applicable international and national governmental regulations. If export shipment and I am the Primary Exporter, I certify that the contents of this consignment conform to the terms of the attached EPA Acknowledgment of Consent.
I certify that the waste minimization statement identified in 40 CFR 262.27(a) (if I am a large quantity generator) or (b) (if I am a small quantity generator) is true.

Generator's/Offeror's Printed/Typed Name: DONN WILLIAMS — Signature: D.W. Williams — Month 8 Day 20 Year 15

16. International Shipments ☐ Import to U.S. ☐ Export from U.S. Port of entry/exit:
Transporter signature (for exports only): Date leaving U.S.:

17. Transporter Acknowledgment of Receipt of Materials
Transporter 1 Printed/Typed Name: Kent Newton — Signature: [signature] — Month 8 Day 20 Year 15
Transporter 2 Printed/Typed Name — Signature — Month Day Year

18. Discrepancy
18a. Discrepancy Indication Space ☑ Quantity ☐ Type ☐ Residue ☐ Partial Rejection ☐ Full Rejection
Corrected to record by wt per Donn Williams JB 8/31/15 Manifest Reference Number:
18b. Alternate Facility (or Generator) — U.S. EPA ID Number
Facility's Phone:
18c. Signature of Alternate Facility (or Generator) — Month Day Year

19. Hazardous Waste Report Management Method Codes (i.e., codes for hazardous waste treatment, disposal, and recycling systems)
1. H132 2. 3. 4.

20. Designated Facility Owner or Operator: Certification of receipt of hazardous materials covered by the manifest except as noted in Item 18a
Printed/Typed Name: Judy Bankhead — Signature: Judy Bankhead — Month 08 Day 31 Year 15

GENERATOR — INT'L — TRANSPORTER — DESIGNATED FACILITY

EPA Form 8700-22 (Rev. 3-05) Previous editions are obsolete.

DESIGNATED FACILITY TO GENERATOR

23933

PRIORITY PRINTING - MERIDIAN, MISSISSIPPI

WASTE MANAGEMENT

Waste Management
Emelle Facility
WEIGHED ON CARDINAL SCALES

436859

GROSS 58080 lb

09:01AM 08/31/2015

GROSS

TARE

NET

GROSS 35180 lb

02:24PM 08/31/2015

22,900

10,387 kg

Customer: Solutia, Inc

Transporter: RDW

Truck #: 204 Trailer #: 2160

Receipt #: 508200 Manifest #: 002666521GBF

DIGITAL WEIGHT INDICATOR & PRINTER

WEIGHED BY JB

FORM 510

Chemical Waste Management
P.O. Box 55
36964 Alabama Hwy 17
Emelle, AL 35459-0055
(205)652-9721

SOLUTIA INC
702 CLYDESDALE AVE

ANNISTON,AL 36201-5328

Attn: DONN WILLIAMS

Site Infomation

SOLUTIA
702 CLYDESDALE AVE

ANNISTON,AL 36201-5328

ACKNOWLEDGEMENT OF RECEIPT OF WASTE SHIPMENT

Generator Name: SOLUTIA
Enclosed is/are your Generator Number Two copy / copies for Alabama Manifest Numbers:

002666521GBF

This copy is to acknowledge that Chemical Waste Management, Inc., of Emelle, Alabama has received your shipment. As a requirement of 40 CFR 264.12 (b), this letter serves to inform you that this facility has the proper permits and will accept your shipment upon completion of waste analysis procedures specified in the facility's Waste Analysis Plan and as determined in the approval waste profile submitted for this/these wastes.

As of September 26, 1997, Chemical Waste Management, Inc., Emelle Alabama (ALD000622464) is operating under a AHWMMA Permit, issued by the Alabama Department of Environmental Management. (RCRA)

Al Talbott
Safety Manager

September 02, 2015

2160

CWMI

Please print or type. (Form designed for use on elite (12-pitch) typewriter.)

Form Approved. OMB No. 2050-0039

UNIFORM HAZARDOUS WASTE MANIFEST

1. Generator ID Number: EXEMPT
2. Page 1 of 1
3. Emergency Response Phone: [illegible]
4. Manifest Tracking Number: 002666521 GBF

5. Generator's Name and Mailing Address
SOLUTIA, INC - ANNISTON PCB SITE
702 CLYDESDALE AVE
ANNISTON AL 36201
Generator's Phone: (601)807-1187

Generator's Site Address (if different than mailing address)

6. Transporter 1 Company Name: Robbie D. Wood
U.S. EPA ID Number: ALD067138891

7. Transporter 2 Company Name
U.S. EPA ID Number

8. Designated Facility Name and Site Address
CHEMICAL WASTE MANAGEMENT, INC.
HIGHWAY 17 NORTH, MILE MARKER 163
EMELLE AL 35459
Facility's Phone: (205)652-9721
U.S. EPA ID Number: ALD000622464

9a. HM	9b. U.S. DOT Description (including Proper Shipping Name, Hazard Class, ID Number, and Packing Group (if any))	10. Containers No.	10. Containers Type	11. Total Quantity	12. Unit Wt./Vol.	13. Waste Codes
X	1. UN3432,RQ,POLYCHLORINATED BIPHENYLS,SOLID,9,III CM9879	001	DT	18000	K	
	2.					
	3.					
	4.					

14. Special Handling Instructions and Additional Information
1. CM9879 ERG-171 PO#: 42557866 OSD: 8/20/15
ERI PROVIDER: CHEMTREC (CONTRACT CCN24117) Auto Clave

15. **GENERATOR'S/OFFEROR'S CERTIFICATION:** I hereby declare that the contents of this consignment are fully and accurately described above by the proper shipping name, and are classified, packaged, marked and labeled/placarded, and are in all respects in proper condition for transport according to applicable international and national governmental regulations. If export shipment and I am the Primary Exporter, I certify that the contents of this consignment conform to the terms of the attached EPA Acknowledgment of Consent.
I certify that the waste minimization statement identified in 40 CFR 262.27(a) (if I am a large quantity generator) or (b) (if I am a small quantity generator) is true.

Generator's/Offeror's Printed/Typed Name: DONN WILLIAMS
Signature: [signature]
Month 8 Day 20 Year 15

16. International Shipments ☐ Import to U.S. ☐ Export from U.S. Port of entry/exit:
Transporter signature (for exports only): Date leaving U.S.:

17. Transporter Acknowledgment of Receipt of Materials
Transporter 1 Printed/Typed Name: Kent Newton
Signature: [signature]
Month 8 Day 20 Year 15
Transporter 2 Printed/Typed Name
Signature
Month Day Year

18. Discrepancy
18a. Discrepancy Indication Space ☐ Quantity ☐ Type ☐ Residue ☐ Partial Rejection ☐ Full Rejection
Manifest Reference Number:

18b. Alternate Facility (or Generator)
U.S. EPA ID Number
Facility's Phone:

18c. Signature of Alternate Facility (or Generator)
Month Day Year

19. Hazardous Waste Report Management Method Codes (i.e., codes for hazardous waste treatment, disposal, and recycling systems)
1. 2. 3. 4.

20. Designated Facility Owner or Operator: Certification of receipt of hazardous materials covered by the manifest except as noted in Item 18a
Printed/Typed Name
Signature
Month Day Year

GENERATOR / INT'L / TRANSPORTER / DESIGNATED FACILITY

EPA Form 8700-22 (Rev. 3-05) Previous editions are obsolete.

GENERATOR'S INITIAL COPY

ROBBIE D. WOOD, INC.

BOX OWNER RDW

ROLL-OFF BOX # 2160 SN# _____

TRACTOR # 525

DRIVER SIGNATURE [signature]

DRIVERS: WHEN FILLING OUT THIS FORM, WRITE ON HARD SURFACE, PRESS FIRMLY WITH BALL-POINT

LOAD # 119558

DELIVERY INFORMATION

DATE: _____ AM/PM

LOADED BOX

Unloaded at _____

Drop Loaded at _____

Box returned to: _____

EMPTY BOX DELIVERED TO:

CONSIGNEE _____

CITY, ST _____

CUSTOMER SIGNATURE _____

PICK-UP INFORMATION

DATE: 8/20/15 AM/PM

SHIPPER Dalton

P/U CITY - ST. [illegible]

CUSTOMER SIGNATURE [signature]

EMPTY ☐

LOADED ☐

MANIFEST # 00266652169

Indicate below any damage done to roll-off box by circling that portion on the drawing below.

Condition of Tarp: OK

Condition of Bows: OK

No. Bows 0

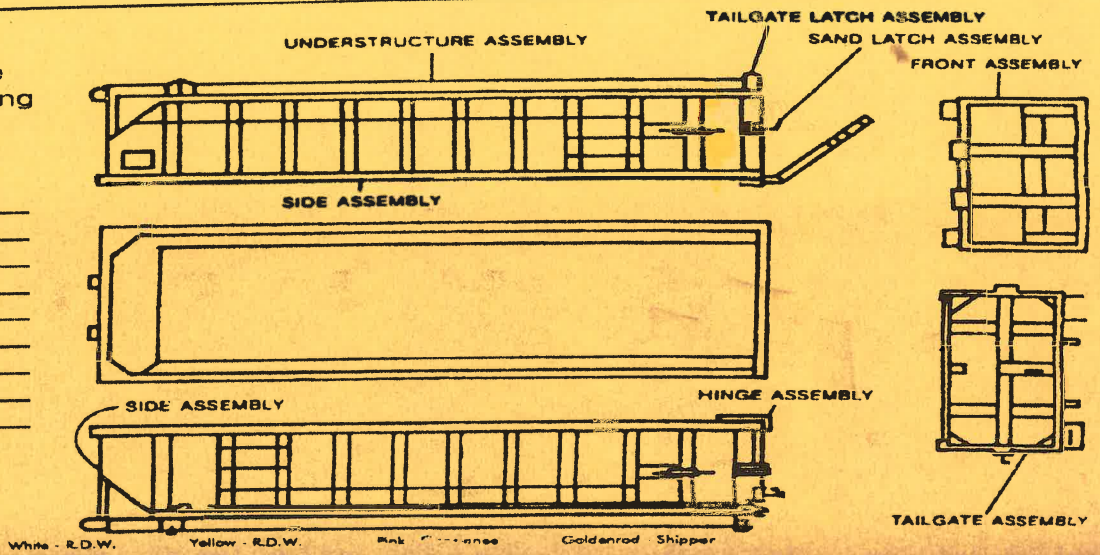

White - R.D.W. Yellow - R.D.W. Pink [illegible] Goldenrod Shipper

WM
Chemical Waste Managment
P.O. Box 55
36964 Alabama Hwy 17
Emelle, AL 35459-0055
(205)652-9721

Manifest Document Number:

SOLUTIA INC
702 CLYDESDALE AVE

ANNISTON, AL 36201-5328

Attn: DONN WILLIAMS

Site Information

SOLUTIA
702 CLYDESDALE AVE

ANNISTON, AL 36201-5328

CERTIFICATE OF DISPOSAL

Chemical Waste Management, Inc. (ALD000622464) has received PCB material from
SOLUTIA

as described on Hazardous Waste Manifest Number 002666522GBF-1
Waste Management, Inc. hereby certifies that the above described material (excluding PCB liquids, if applicable) was landfilled on the dates shown below, in compliance with State and Federal Regulations.

Under civil and criminal penalties of law for the making or submission of false or fraudulent statements or representation (18 U.S.C. 1001 and 15 U.S.C. 2615), I certify that the information contained in or accompanying this document is true, accurate and complete. As to the identified section(s) of this document for which I cannot personally verify truth and accuracy, I certify as the company official having supervisory responsibility for the persons who, acting under my direct instructions, made the verification that this information is true, accurate and complete.

Al Talbott / am

Al Talbott, Safety Manager
August 29, 2015

OSD	Unique ID	Cont #	Profile	Disposed	Description
8/20/15	002666522GBF-01	1	CM9879	8/26/15	ANNISTON PCB SITE CONSENT DECR

Box 2570

CWMI

Please print or type. (Form designed for use on elite (12-pitch) typewriter.)

Form Approved. OMB No. 2050-0039

UNIFORM HAZARDOUS WASTE MANIFEST

1. Generator ID Number: EXEMPT
2. Page 1 of 1
3. Emergency Response Phone: 770 337 4609
4. Manifest Tracking Number: 002666522 GBF

5. Generator's Name and Mailing Address
SOLUTIA, INC - ANNISTON PCB SITE
702 CLYDESDALE AVE
ANNISTON AL 36201
Generator's Phone: (601)907-1187

Generator's Site Address (if different than mailing address)

6. Transporter 1 Company Name: Robbie D Wood INC
U.S. EPA ID Number: ALD067138891

7. Transporter 2 Company Name
U.S. EPA ID Number

8. Designated Facility Name and Site Address
CHEMICAL WASTE MANAGEMENT, INC.
HIGHWAY 17 NORTH, MILE MARKER 163
EMELLE AL 35459
Facility's Phone: (205)652-9721
U.S. EPA ID Number: ALD000622464

9a. HM	9b. U.S. DOT Description (including Proper Shipping Name, Hazard Class, ID Number, and Packing Group (if any))	10. Containers No.	10. Containers Type	11. Total Quantity	12. Unit Wt./Vol.	13. Waste Codes
X	1. UN3432,RQ,POLYCHLORINATED BIPHENYLS,SOLID,9,III CM9879	001	~~BT~~ CM	14,697 ~~18000~~	K	
	2.			JB 8/26/15		
	3.					
	4.					

14. Special Handling Instructions and Additional Information
1. CM9879 ERG-171 PO#: 42557866 OSD: 8/20/15
ERI PROVIDER: CHEMTREC (CONTRACT CCN24117) Auto Clave

15. **GENERATOR'S/OFFEROR'S CERTIFICATION:** I hereby declare that the contents of this consignment are fully and accurately described above by the proper shipping name, and are classified, packaged, marked and labeled/placarded, and are in all respects in proper condition for transport according to applicable international and national governmental regulations. If export shipment and I am the Primary Exporter, I certify that the contents of this consignment conform to the terms of the attached EPA Acknowledgment of Consent.
I certify that the waste minimization statement identified in 40 CFR 262.27(a) (if I am a large quantity generator) or (b) (if I am a small quantity generator) is true.

Generator's/Offeror's Printed/Typed Name: DONN WILLIAMS
Signature: E Williams
Month 8 Day 20 Year 15

16. International Shipments ☐ Import to U.S. ☐ Export from U.S. Port of entry/exit:
Transporter signature (for exports only): Date leaving U.S.:

17. Transporter Acknowledgment of Receipt of Materials
Transporter 1 Printed/Typed Name: Earnest Winston
Signature: Earnest Winston
Month 8 Day 20 Year 15
Transporter 2 Printed/Typed Name
Signature
Month Day Year

18. Discrepancy
18a. Discrepancy Indication Space ☒ Quantity ☐ Type ☐ Residue ☐ Partial Rejection ☐ Full Rejection
Added recvd kg wt per Donn Williams. JD 8/26/15
Manifest Reference Number:
18b. Alternate Facility (or Generator)
U.S. EPA ID Number
Facility's Phone:
18c. Signature of Alternate Facility (or Generator)
Month Day Year

19. Hazardous Waste Report Management Method Codes (i.e., codes for hazardous waste treatment, disposal, and recycling systems)
1. H132 2. 3. 4.

20. Designated Facility Owner or Operator: Certification of receipt of hazardous materials covered by the manifest except as noted in Item 18a
Printed/Typed Name: Mal Alexander
Signature: Mal Alexander
Month 8 Day 26 Year 15

GENERATOR / INT'L / TRANSPORTER / DESIGNATED FACILITY

EPA Form 8700-22 (Rev. 3-05) Previous editions are obsolete.

DESIGNATED FACILITY TO GENERATOR

23933

PRIORITY PRINTING - MERIDIAN, MISSISSIPPI

WASTE MANAGEMENT

Waste Management
Emelle Facility
WEIGHED ON CARDINAL SCALES

436746

GROSS 73160 lb
09:04AM 08/26/2015

GROSS
TARE
NET

GROSS 40760 lb
11:28AM 08/26/2015
32400

Customer: Solutia

Transporter: RN

Truck #: 205 Trailer #: 2570 14697 K

Receipt #: 508118 Manifest #: 002666522GBF

DIGITAL WEIGHT INDICATOR & PRINTER
WEIGHED BY AM

FORM 510

Chemical Waste Management
P.O. Box 55
36964 Alabama Hwy 17
Emelle, AL 35459-0055
(205)652-9721

SOLUTIA INC
702 CLYDESDALE AVE

ANNISTON,AL 36201-5328

Attn: DONN WILLIAMS

Site Infomation

SOLUTIA
702 CLYDESDALE AVE

ANNISTON,AL 36201-5328

ACKNOWLEDGEMENT OF RECEIPT OF WASTE SHIPMENT

Generator Name: SOLUTIA
Enclosed is/are your Generator Number Two copy / copies for Alabama Manifest Numbers:

002666522GBF

This copy is to acknowledge that Chemical Waste Management, Inc., of Emelle, Alabama has received your shipment. As a requirement of 40 CFR 264.12 (b), this letter serves to inform you that this facility has the proper permits and will accept your shipment upon completion of waste analysis procedures specified in the facility's Waste Analysis Plan and as determined in the approval waste profile submitted for this/these wastes.

As of September 26, 1997, Chemical Waste Management, Inc., Emelle Alabama (ALD000622464) is operating under a AHWMMA Permit, issued by the Alabama Department of Environmental Management. (RCRA)

Al Talbott
Safety Manager

August 29, 2015

Box 2576

CWMI

Please print or type. (Form designed for use on elite (12-pitch) typewriter.)

Form Approved. OMB No. 2050-0039

UNIFORM HAZARDOUS WASTE MANIFEST

1. Generator ID Number: EXEMPT
2. Page 1 of 1
3. Emergency Response Phone:
4. Manifest Tracking Number: 002666522 GBF

5. Generator's Name and Mailing Address
SOLUTIA, INC - ANNISTON PCB SITE
702 CLYDESDALE AVE
ANNISTON AL 36201
Generator's Phone: (601)807-1187

Generator's Site Address (if different than mailing address)

6. Transporter 1 Company Name: Robbie D Wood INC
U.S. EPA ID Number: ALD067138891

7. Transporter 2 Company Name:
U.S. EPA ID Number:

8. Designated Facility Name and Site Address
CHEMICAL WASTE MANAGEMENT, INC.
HIGHWAY 17 NORTH, MILE MARKER 163
EMELLE AL 35459
Facility's Phone: (205)652-9721
U.S. EPA ID Number: ALD000622464

9a. HM	9b. U.S. DOT Description (including Proper Shipping Name, Hazard Class, ID Number, and Packing Group (if any))	10. Containers No.	10. Containers Type	11. Total Quantity	12. Unit Wt./Vol.	13. Waste Codes
X	1. UN3432,RQ,POLYCHLORINATED BIPHENYLS,SOLID,9,III CM9879	001	DT	18000	K	
	2.					
	3.					
	4.					

14. Special Handling Instructions and Additional Information
1. CM9879 ERG-171 PO#: 42557866 OSD:
ERI PROVIDER: CHEMTREC (CONTRACT CCN24117) Auto Clave

15. **GENERATOR'S/OFFEROR'S CERTIFICATION:** I hereby declare that the contents of this consignment are fully and accurately described above by the proper shipping name, and are classified, packaged, marked and labeled/placarded, and are in all respects in proper condition for transport according to applicable international and national governmental regulations. If export shipment and I am the Primary Exporter, I certify that the contents of this consignment conform to the terms of the attached EPA Acknowledgment of Consent.
I certify that the waste minimization statement identified in 40 CFR 262.27(a) (if I am a large quantity generator) or (b) (if I am a small quantity generator) is true.

Generator's/Offeror's Printed/Typed Name: DONN WILLIAMS
Signature: D Williams
Month Day Year

16. International Shipments ☐ Import to U.S. ☐ Export from U.S. Port of entry/exit:
Transporter signature (for exports only): Date leaving U.S.:

17. Transporter Acknowledgment of Receipt of Materials
Transporter 1 Printed/Typed Name: Earnest Winston
Signature: Earnest Winston
Month Day Year: 8 20 15
Transporter 2 Printed/Typed Name:
Signature:
Month Day Year

18. Discrepancy
18a. Discrepancy Indication Space ☐ Quantity ☐ Type ☐ Residue ☐ Partial Rejection ☐ Full Rejection
Manifest Reference Number:

18b. Alternate Facility (or Generator)
U.S. EPA ID Number
Facility's Phone:

18c. Signature of Alternate Facility (or Generator)
Month Day Year

19. Hazardous Waste Report Management Method Codes (i.e., codes for hazardous waste treatment, disposal, and recycling systems)
1. 2. 3. 4.

20. Designated Facility Owner or Operator: Certification of receipt of hazardous materials covered by the manifest except as noted in Item 18a
Printed/Typed Name
Signature
Month Day Year

GENERATOR

INT'L

TRANSPORTER

DESIGNATED FACILITY

EPA Form 8700-22 (Rev. 3-05) Previous editions are obsolete.

GENERATOR'S INITIAL COPY

ROBBIE D. WOOD, INC.

DRIVERS: WHEN FILLING OUT THIS FORM, WRITE ON HARD SURFACE, PRESS FIRMLY WITH BALL-POINT

LOAD # 119596

BOX OWNER RDW

ROLL-OFF BOX # 2570 SN# 3477

TRACTOR # 5174

DRIVER SIGNATURE Earnest Whistler

PICK-UP INFORMATION

AM/PM

DATE:

SHIPPER Monsanto

P/U CITY - ST. Anniston AL

CUSTOMER SIGNATURE [signature]

EMPTY ☐

LOADED ☑

MANIFEST #

DELIVERY INFORMATION

AM/PM

DATE:

LOADED BOX

Unloaded at

Drop Loaded at

Box returned to:

EMPTY BOX DELIVERED TO:

CONSIGNEE

CITY, ST

CUSTOMER SIGNATURE

Indicate below any damage done to roll-off box by circling that portion on the drawing below.

Condition of Tarp: Poor

Condition of Bows: OK

No. Bows

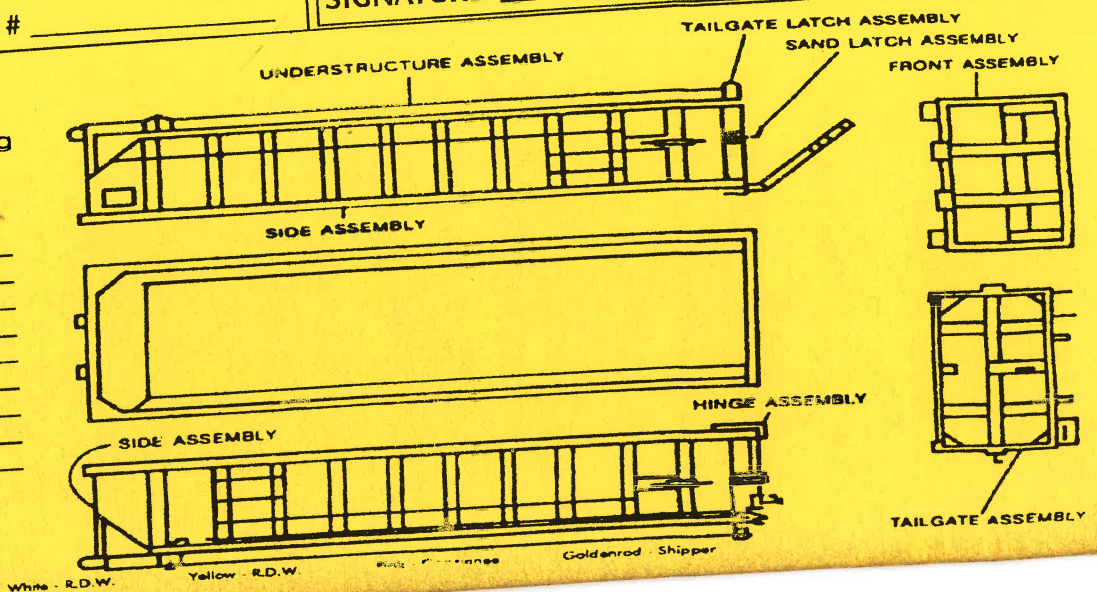

Robbie D. Wood, Inc.

P.O. BOX 125 DOLOMITE, ALABAMA 35061

NO. MC 142393

BILL OF LADING 167085

SHIPPER Monsanto	LOADING CITY/STATE Anniston AL		MANIFEST NO.
CONSIGNEE	DESTINATION Dolomite AL		
TRACTOR NO.	TRAILER NO.	BOX NO.	DATE SHIPPED 8-20-15
S174	01655	2570	LOAD NO. 1195961

COMP NO	LOADING TEMP ° F	COMMODITY	UNIT	QUANTITY
	1	UN3432 Nos 9		

QUANTITY	
	Gross
	Tare
	Net
	Tons

LOADING TIME
IN M.
OUT M. AUTHORIZATION - LOADING DEMURRAGE

DENTENTION RECORD — EXPLAIN TIME SPENT

UNLOADING TIME
IN M.
OUT M. AUTHORIZATION - UNLOADING DEMURRAGE

GOVERNED BY TARIFFS AND CLASSIFICATIONS ISSUED BY THE CARRIER AND/OR ITS AGENTS

SHIPPER PER [signature]

CARRIER PER [signature]

RECEIVED THE ABOVE-DESCRIBED PROPERTY IN GOOD CONDITION EXCEPT AS NOTED

FIRM

BY

SHOW COMPLETE COMPANY NAME AND SIGNATURE INITIALS NOT ACCEPTED

DELIVERY DATE

White - R. D. W. Yellow - R. D. W. Pink - Consignee Goldenrod - Shipper

Eaton Printing 112602 426-2647

CWMI

Please print or type. (Form designed for use on elite (12-pitch) typewriter.)

Form Approved. OMB No. 2050-0039

UNIFORM HAZARDOUS WASTE MANIFEST	1. Generator ID Number	2. Page 1 of	3. Emergency Response Phone	4. Manifest Tracking Number
	EXEMPT	1	[illegible]	002666523 GBF

5. Generator's Name and Mailing Address

SOLUTIA, INC - ANNISTON PCB SITE
702 CLYDESDALE AVE
ANNISTON AL 36201
(601)807-1187

Generator's Site Address (if different than mailing address)

Generator's Phone:

6. Transporter 1 Company Name: Robbie R. Wood — U.S. EPA ID Number: AID063128891

7. Transporter 2 Company Name — U.S. EPA ID Number

8. Designated Facility Name and Site Address

CHEMICAL WASTE MANAGEMENT, INC.
HIGHWAY 17 NORTH, MILE MARKER 163
EMELLE AL 35459

Facility's Phone: (205)652-9721

U.S. EPA ID Number: ALD000622464

9a. HM	9b. U.S. DOT Description (including Proper Shipping Name, Hazard Class, ID Number, and Packing Group (if any))	10. Containers No.	10. Containers Type	11. Total Quantity	12. Unit Wt./Vol.	13. Waste Codes
X	1. UN3432,RQ,POLYCHLORINATED BIPHENYLS,SOLID,9,III CM9879	001	DT	18000	K	
	2.					
	3.					
	4.					

14. Special Handling Instructions and Additional Information

1. CM9879 ERG-171 PO#: 42557866 OSD: [illegible]

ERI PROVIDER: CHEMTREC (CONTRACT CCN24117) [illegible]

15. **GENERATOR'S/OFFEROR'S CERTIFICATION:** I hereby declare that the contents of this consignment are fully and accurately described above by the proper shipping name, and are classified, packaged, marked and labeled/placarded, and are in all respects in proper condition for transport according to applicable international and national governmental regulations. If export shipment and I am the Primary Exporter, I certify that the contents of this consignment conform to the terms of the attached EPA Acknowledgment of Consent.
I certify that the waste minimization statement identified in 40 CFR 262.27(a) (if I am a large quantity generator) or (b) (if I am a small quantity generator) is true.

Generator's/Offeror's Printed/Typed Name: DONN WILLIAMS — Signature: [illegible] — Month / Day / Year

16. International Shipments ☐ Import to U.S. ☐ Export from U.S. Port of entry/exit:
Transporter signature (for exports only): Date leaving U.S.:

17. Transporter Acknowledgment of Receipt of Materials

Transporter 1 Printed/Typed Name: Anthony Perry — Signature: [illegible] — Month / Day / Year: 06 / 20 / 15

Transporter 2 Printed/Typed Name — Signature — Month / Day / Year

18. Discrepancy

18a. Discrepancy Indication Space ☐ Quantity ☐ Type ☐ Residue ☐ Partial Rejection ☐ Full Rejection

Manifest Reference Number:

18b. Alternate Facility (or Generator) — U.S. EPA ID Number

Facility's Phone:

18c. Signature of Alternate Facility (or Generator) — Month / Day / Year

Hazardous Waste Report Management Method Codes (i.e., codes for hazardous waste treatment, disposal, and recycling systems)

	2.	3.	4.

...ed Facility Owner or Operator: Certification of receipt of hazardous materials covered by the manifest except as noted in Item 18a

Name — Signature — Month / Day / Year

...v. 3-05) Previous editions are obsolete.

GENERATOR'S INITIAL COPY



NO. BOWS

Robbie D. Wood, Inc.

P.O. BOX 125 DOLOMITE, ALABAMA 35061

NO. MC 142393

LADING 169174

SHIPPER Solution

CONSIGNEE Chemical waste

LOADING CITY/STATE Anniston AL

DESTINATION Emelle AL

TRACTOR NO. 861

TRAILER NO. 1636

BOX NO. 2530

MANIFEST NO. 002666523

DATE SHIPPED 8/20/15

LOAD NO. 195460

COMP NO	LOADING TEMP ° F	COMMODITY	UNIT	QUANTITY
		3432		

QUANTITY

Gross

Tare

Net

Tons

LOADING TIME IN M.

OUT M. AUTHORIZATION - LOADING DEMURRAGE

DENTENTION RECORD — EXPLAIN TIME SPENT

UNLOADING TIME IN M.

OUT M. AUTHORIZATION - UNLOADING DEMURRAGE

GOVERNED BY TARIFFS AND CLASSIFICATIONS ISSUED BY THE CARRIER AND/OR ITS AGENTS

SHIPPER PER

CARRIER PER

RECEIVED THE ABOVE-DESCRIBED PROPERTY IN GOOD CONDITION EXCEPT AS NOTED

FIRM

BY

SHOW COMPLETE COMPANY NAME AND SIGNATURE INITIALS NOT ACCEPTED

DELIVERY DATE

White - R. D. W. Yellow - R. D. W. Pink - Consignee Goldenrod - Shipper

Eaton Printing 426-2647

ROBBIE D. WOOD, INC.

Box 2008

CWMI

Please print or type. (Form designed for use on elite (12-pitch) typewriter.)

Form Approved. OMB No. 2050-0039

UNIFORM HAZARDOUS WASTE MANIFEST

1. Generator ID Number: EXEMPT
2. Page 1 of 1
3. Emergency Response Phone:
4. Manifest Tracking Number: 002666524 GBF

5. Generator's Name and Mailing Address
SOLUTIA, INC - ANNISTON PCB SITE
702 CLYDESDALE AVE
ANNISTON AL 36201
Generator's Phone: (601)807-1187

Generator's Site Address (if different than mailing address):

6. Transporter 1 Company Name: Robbie D. Wood
U.S. EPA ID Number: ALD067138891

7. Transporter 2 Company Name:
U.S. EPA ID Number:

8. Designated Facility Name and Site Address
CHEMICAL WASTE MANAGEMENT, INC.
HIGHWAY 17 NORTH, MILE MARKER 163
EMELLE AL 35459
Facility's Phone: (205)652-9721
U.S. EPA ID Number: ALD000622464

9a. HM	9b. U.S. DOT Description (including Proper Shipping Name, Hazard Class, ID Number, and Packing Group (if any))	10. Containers No.	10. Containers Type	11. Total Quantity	12. Unit Wt./Vol.	13. Waste Codes
X	1. UN3432,RQ,POLYCHLORINATED BIPHENYLS,SOLID,9,III CM9879	001	DT	18000	K	
	2.					
	3.					
	4.					

14. Special Handling Instructions and Additional Information
1. CM9879 ERG-171 PO#: 42557866 OSD: 8/20/15
ERI PROVIDER: CHEMTREC (CONTRACT CCN24117)

15. **GENERATOR'S/OFFEROR'S CERTIFICATION:** I hereby declare that the contents of this consignment are fully and accurately described above by the proper shipping name, and are classified, packaged, marked and labeled/placarded, and are in all respects in proper condition for transport according to applicable international and national governmental regulations. If export shipment and I am the Primary Exporter, I certify that the contents of this consignment conform to the terms of the attached EPA Acknowledgment of Consent.
I certify that the waste minimization statement identified in 40 CFR 262.27(a) (if I am a large quantity generator) or (b) (if I am a small quantity generator) is true.

Generator's/Offeror's Printed/Typed Name: DONN WILLIAMS
Signature: D.W. Williams
Month 8 Day 20 Year 15

16. International Shipments ☐ Import to U.S. ☐ Export from U.S. Port of entry/exit:
Transporter signature (for exports only): Date leaving U.S.:

17. Transporter Acknowledgment of Receipt of Materials
Transporter 1 Printed/Typed Name: Kent Newton
Signature: [signature]
Month 8 Day 20 Year 15
Transporter 2 Printed/Typed Name:
Signature:
Month Day Year

18. Discrepancy
18a. Discrepancy Indication Space ☐ Quantity ☐ Type ☐ Residue ☐ Partial Rejection ☐ Full Rejection
Manifest Reference Number:

18b. Alternate Facility (or Generator)
U.S. EPA ID Number:
Facility's Phone:

18c. Signature of Alternate Facility (or Generator)
Month Day Year

19. Hazardous Waste Report Management Method Codes (i.e., codes for hazardous waste treatment, disposal, and recycling systems)
1. 2. 3. 4.

20. Designated Facility Owner or Operator: Certification of receipt of hazardous materials covered by the manifest except as noted in Item 18a
Printed/Typed Name:
Signature:
Month Day Year

GENERATOR / INT'L / TRANSPORTER / DESIGNATED FACILITY

EPA Form 8700-22 (Rev. 3-05) Previous editions are obsolete.

GENERATOR'S INITIAL COPY

ROBBIE D. WOOD, INC.

BOX OWNER RDW

ROLL-OFF BOX # 2005 SN# BF 7022

TRACTOR # 385

DRIVER SIGNATURE [illegible]

DRIVERS: WHEN FILLING OUT THIS FORM, WRITE ON HARD SURFACE, PRESS FIRMLY WITH BALL-POINT LOAD # 119559

PICK-UP INFORMATION

DATE: 20 AUG 15 AM/PM

SHIPPER [illegible]

P/U CITY - ST. [illegible]

CUSTOMER SIGNATURE X [illegible]

EMPTY ☐

LOADED ☑ MANIFEST # 002666524[illegible]

DELIVERY INFORMATION

DATE: _____ AM/PM

LOADED BOX

Unloaded at _____

Drop Loaded at _____

Box returned to: _____

EMPTY BOX DELIVERED TO:

CONSIGNEE _____

CITY, ST _____

CUSTOMER SIGNATURE _____

Indicate below any damage done to roll-off box by circling that portion on the drawing below.

Condition of Tarp: OK

Condition of Bows: OK

No. Bows [illegible]

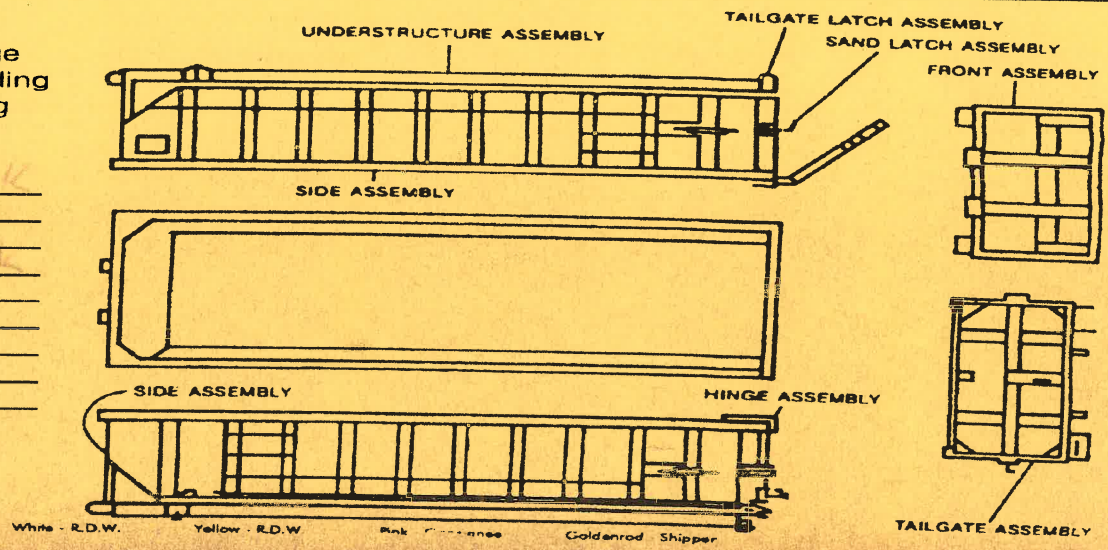

= Robbie D. Wood, Inc. =

P.O. BOX 125 DOLOMITE, ALABAMA 35061

BILL OF LADING NO. MC 142393 185626

SHIPPER	LOADING CITY/STATE	MANIFEST NO.
Solutia	Anniston, AL	002660524GBF
CONSIGNEE WM	DESTINATION Emelle, AL	

TRACTOR NO.	TRAILER NO.	BOX NO.	DATE SHIPPED
385	1668	2006	10 AUG 15

LOAD NO. 1175959

COMP NO	LOADING TEMP ° F	COMMODITY	UNIT	QUANTITY
	RQ	NA 3432 PCB HAZ WASTE		

QUANTITY	
	Gross
	Tare
	Net
	Tons

LOADING TIME IN M. OUT M. AUTHORIZATION - LOADING DEMURRAGE

— — — — — — — — — DENTENTION RECORD — — — EXPLAIN TIME SPENT — — — —

UNLOADING TIME IN M. OUT M. AUTHORIZATION - UNLOADING DEMURRAGE

GOVERNED BY TARIFFS AND CLASSIFICATIONS ISSUED BY THE CARRIER AND/OR ITS AGENTS

SHIPPER PER

CARRIER PER

RECEIVED THE ABOVE-DESCRIBED PROPERTY IN GOOD CONDITION EXCEPT AS NOTED

FIRM

BY

SHOW COMPLETE COMPANY NAME AND SIGNATURE
INITIALS NOT ACCEPTED

DELIVERY DATE

White - R. D. W. Yellow - R. D. W. Pink - Consignee Goldenrod - Shipper

Eaton Printing 112602 426-2647

WM
Chemical Waste Managment
P.O. Box 55
36964 Alabama Hwy 17
Emelle, AL 35459-0055
(205)652-9721

Manifest Document Number:

SOLUTIA INC
702 CLYDESDALE AVE

ANNISTON, AL 36201-5328

Attn: DONN WILLIAMS

Site Information

SOLUTIA
702 CLYDESDALE AVE

ANNISTON, AL 36201-5328

CERTIFICATE OF DISPOSAL

Chemical Waste Management, Inc. (ALD000622464) has received PCB material from
SOLUTIA

as described on Hazardous Waste Manifest Number 002666525GBF-1
Waste Management, Inc. hereby certifies that the above described material (excluding PCB liquids, if applicable) was landfilled on the dates shown below, in compliance with State and Federal Regulations.

Under civil and criminal penalties of law for the making or submission of false or fraudulent statements or representation (18 U.S.C. 1001 and 15 U.S.C. 2615), I certify that the information contained in or accompanying this document is true, accurate and complete. As to the identified section(s) of this document for which I cannot personally verify truth and accuracy, I certify as the company official having supervisory responsibility for the persons who, acting under my direct instructions, made the verification that this information is true, accurate and complete.

Al Talbott/cm

Al Talbott, Safety Manager
September 12, 2015

OSD	Unique ID	Cont #	Profile	Disposed	Description
8/27/15	002666525GBF-01	1	CM9879	9/3/15	ANNISTON PCB SITE CONSENT DECR

Buy # 2027 1156366 CWMI

Please print or type. (Form designed for use on elite (12-pitch) typewriter.) Form Approved. OMB No. 2050-0039

UNIFORM HAZARDOUS WASTE MANIFEST

1. Generator ID Number	2. Page 1 of	3. Emergency Response Phone	4. Manifest Tracking Number
EXEMPT	1		002666525 GBF

GENERATOR

5. Generator's Name and Mailing Address
SOLUTIA, INC - ANNISTON PCB SITE
702 CLYDESDALE AVE
ANNISTON AL 36201
Generator's Phone: (601)607-1187

Generator's Site Address (if different than mailing address)

6. Transporter 1 Company Name: RDW — U.S. EPA ID Number: ALD067138891

7. Transporter 2 Company Name — U.S. EPA ID Number

8. Designated Facility Name and Site Address
CHEMICAL WASTE MANAGEMENT, INC.
HIGHWAY 17 NORTH, MILE MARKER 163
EMELLE AL 35459
Facility's Phone: (205)652-9721 — U.S. EPA ID Number: ALD000622464

9a. HM	9b. U.S. DOT Description (including Proper Shipping Name, Hazard Class, ID Number, and Packing Group (if any))	10. Containers No.	10. Containers Type	11. Total Quantity	12. Unit Wt./Vol.	13. Waste Codes
X	1. UN3432,RQ,POLYCHLORINATED BIPHENYLS,SOLID,9,III CM9879	001	~~DT~~ CM	11,775 ~~18000~~ JB 9/3/15	K	
	2.					
	3.					
	4.					

14. Special Handling Instructions and Additional Information
1. CM9879 ERG-171 POE: 4255786 OSD: 8/27/15 2027
ERI PROVIDER: CHEMTREC (CONTRACT CCN24117) Auto Clave

15. **GENERATOR'S/OFFEROR'S CERTIFICATION:** I hereby declare that the contents of this consignment are fully and accurately described above by the proper shipping name, and are classified, packaged, marked and labeled/placarded, and are in all respects in proper condition for transport according to applicable international and national governmental regulations. If export shipment and I am the Primary Exporter, I certify that the contents of this consignment conform to the terms of the attached EPA Acknowledgment of Consent.
I certify that the waste minimization statement identified in 40 CFR 262.27(a) (if I am a large quantity generator) or (b) (if I am a small quantity generator) is true.

Generator's/Offeror's Printed/Typed Name: DONN WILLIAMS — Signature: DW — Month: 8 Day: 27 Year: 15

INT'L

16. International Shipments ☐ Import to U.S. ☐ Export from U.S. Port of entry/exit:
Transporter signature (for exports only): Date leaving U.S.:

TRANSPORTER

17. Transporter Acknowledgment of Receipt of Materials

Transporter 1 Printed/Typed Name: Charles McCullers — Signature: Charles McCullers — Month: 08 Day: 27 Year: 15

Transporter 2 Printed/Typed Name — Signature — Month — Day — Year

DESIGNATED FACILITY

18. Discrepancy

18a. Discrepancy Indication Space ☒ Quantity ☐ Type ☐ Residue ☐ Partial Rejection ☐ Full Rejection
Correct to recv'd kg wt per Donn Williams JB 9/3/15 Manifest Reference Number:

18b. Alternate Facility (or Generator) — U.S. EPA ID Number
Facility's Phone:

18c. Signature of Alternate Facility (or Generator) — Month — Day — Year

19. Hazardous Waste Report Management Method Codes (i.e., codes for hazardous waste treatment, disposal, and recycling systems)

1.	2.	3.	4.
M132			

20. Designated Facility Owner or Operator: Certification of receipt of hazardous materials covered by the manifest except as noted in Item 18a

Printed/Typed Name: Mal Alexander — Signature: Mal Alexander — Month: 9 Day: 3 Year: 15

EPA Form 8700-22 (Rev. 3-05) Previous editions are obsolete.

DESIGNATED FACILITY TO GENERATOR

23933

PRIORITY PRINTING - MERIDIAN, MISSISSIPPI

WASTE MANAGEMENT

Waste Management
Emelle Facility
WEIGHED ON CARDINAL SCALES

436375

GROSS 62060 lb
09:52AM 09/03/2015

GROSS 36100 lb
04:03PM 09/03/2015

25960
11775K

GROSS
TARE
NET

Customer: Solutia

Transporter: BOW

Truck #: 204 Trailer #: 2027

Receipt #: 508294 Manifest #: 002666525 GBF

DIGITAL WEIGHT INDICATOR & PRINTER

WEIGHED BY MJ

FORM 510

Chemical Waste Management
P.O. Box 55
36964 Alabama Hwy 17
Emelle, AL 35459-0055
(205)652-9721

SOLUTIA INC
702 CLYDESDALE AVE

ANNISTON,AL 36201-5328

Attn: DONN WILLIAMS

Site Infomation

SOLUTIA
702 CLYDESDALE AVE

ANNISTON,AL 36201-5328

ACKNOWLEDGEMENT OF RECEIPT OF WASTE SHIPMENT

Generator Name: SOLUTIA
Enclosed is/are your Generator Number Two copy / copies for Alabama Manifest Numbers:

002666525GBF

This copy is to acknowledge that Chemical Waste Management, Inc., of Emelle, Alabama has received your shipment. As a requirement of 40 CFR 264.12 (b), this letter serves to inform you that this facility has the proper permits and will accept your shipment upon completion of waste analysis procedures specified in the facility's Waste Analysis Plan and as determined in the approval waste profile submitted for this/these wastes.

As of September 26, 1997, Chemical Waste Management, Inc., Emelle Alabama (ALD000622464) is operating under a AHWMMA Permit, issued by the Alabama Department of Environmental Management. (RCRA)

Al Talbott
Safety Manager

September 12, 2015

Dox 2015

CWMI

Please print or type. (Form designed for use on elite (12-pitch) typewriter.)

Form Approved. OMB No. 2050-0039

UNIFORM HAZARDOUS WASTE MANIFEST

1. Generator ID Number: EXEMPT
2. Page 1 of 1
3. Emergency Response Phone:
4. Manifest Tracking Number: 002666526 GBF

5. Generator's Name and Mailing Address:
SOLUTIA, INC - ANNISTON PCB SITE
702 CLYDESDALE AVE
ANNISTON AL 36201
Generator's Phone: (601)807-1187

Generator's Site Address (if different than mailing address):

6. Transporter 1 Company Name: Robbie D. Wood Inc
U.S. EPA ID Number: ALD 067138891

7. Transporter 2 Company Name:
U.S. EPA ID Number:

8. Designated Facility Name and Site Address:
CHEMICAL WASTE MANAGEMENT, INC.
HIGHWAY 17 NORTH, MILE MARKER 163
EMELLE AL 35459
Facility's Phone: (205)652-9721
U.S. EPA ID Number: ALD000622464

9a. HM	9b. U.S. DOT Description (including Proper Shipping Name, Hazard Class, ID Number, and Packing Group (if any))	10. Containers No.	10. Containers Type	11. Total Quantity	12. Unit Wt./Vol.	13. Waste Codes
X	1. UN3432,RQ,POLYCHLORINATED BIPHENYLS,SOLID,9,III CM9879	001	DT	18000	K	
	2.					
	3.					
	4.					

14. Special Handling Instructions and Additional Information
1. CM9879 ERG-171 PO#: 4955786 OSD: 8/19/15
ERI PROVIDER: CHEMTREC (CONTRACT CCN24117) "Autoclave"

15. **GENERATOR'S/OFFEROR'S CERTIFICATION:** I hereby declare that the contents of this consignment are fully and accurately described above by the proper shipping name, and are classified, packaged, marked and labeled/placarded, and are in all respects in proper condition for transport according to applicable international and national governmental regulations. If export shipment and I am the Primary Exporter, I certify that the contents of this consignment conform to the terms of the attached EPA Acknowledgment of Consent.
I certify that the waste minimization statement identified in 40 CFR 262.27(a) (if I am a large quantity generator) or (b) (if I am a small quantity generator) is true.

Generator's/Offeror's Printed/Typed Name: DONN WILLIAMS
Signature: D. Williams
Month 8 Day 19 Year 15

16. International Shipments ☐ Import to U.S. ☐ Export from U.S. Port of entry/exit:
Transporter signature (for exports only): Date leaving U.S.:

17. Transporter Acknowledgment of Receipt of Materials
Transporter 1 Printed/Typed Name: Tony Charles Moore Sr.
Signature: Tony Charles Moore Sr.
Month 08 Day 19 Year 15
Transporter 2 Printed/Typed Name:
Signature:
Month Day Year

18. Discrepancy
18a. Discrepancy Indication Space ☐ Quantity ☐ Type ☐ Residue ☐ Partial Rejection ☐ Full Rejection
Manifest Reference Number:

18b. Alternate Facility (or Generator)
U.S. EPA ID Number:
Facility's Phone:

18c. Signature of Alternate Facility (or Generator)
Month Day Year

19. Hazardous Waste Report Management Method Codes (i.e., codes for hazardous waste treatment, disposal, and recycling systems)
1. 2. 3. 4.

20. Designated Facility Owner or Operator: Certification of receipt of hazardous materials covered by the manifest except as noted in Item 18a
Printed/Typed Name
Signature
Month Day Year

GENERATOR / INT'L / TRANSPORTER / DESIGNATED FACILITY

EPA Form 8700-22 (Rev. 3-05) Previous editions are obsolete.

GENERATOR'S INITIAL COPY

BOBBIE D. WOOD, INC.

BOX OWNER _____

ROLL-OFF BOX # 2015 SN# _____

TRACTOR # _____

DRIVER SIGNATURE _____

DRIVERS: WHEN FILLING OUT THIS FORM, WRITE ON HARD SURFACE, PRESS FIRMLY WITH BALL-POINT

LOAD # _____

PICK-UP INFORMATION

DATE: _____ AM/PM

SHIPPER _____

P/U CITY - ST. _____

CUSTOMER SIGNATURE _____

EMPTY ☐

LOADED ☐ MANIFEST # _____

DELIVERY INFORMATION

DATE: _____ AM/PM

LOADED BOX

Unloaded at _____

Drop Loaded at _____

Box returned to: _____

EMPTY BOX DELIVERED TO:

CONSIGNEE _____

CITY, ST _____

CUSTOMER SIGNATURE _____

Indicate below any damage done to roll-off box by circling that portion on the drawing below.

Condition of Tarp: _____

Condition of Bows: _____

No. Bows: _____

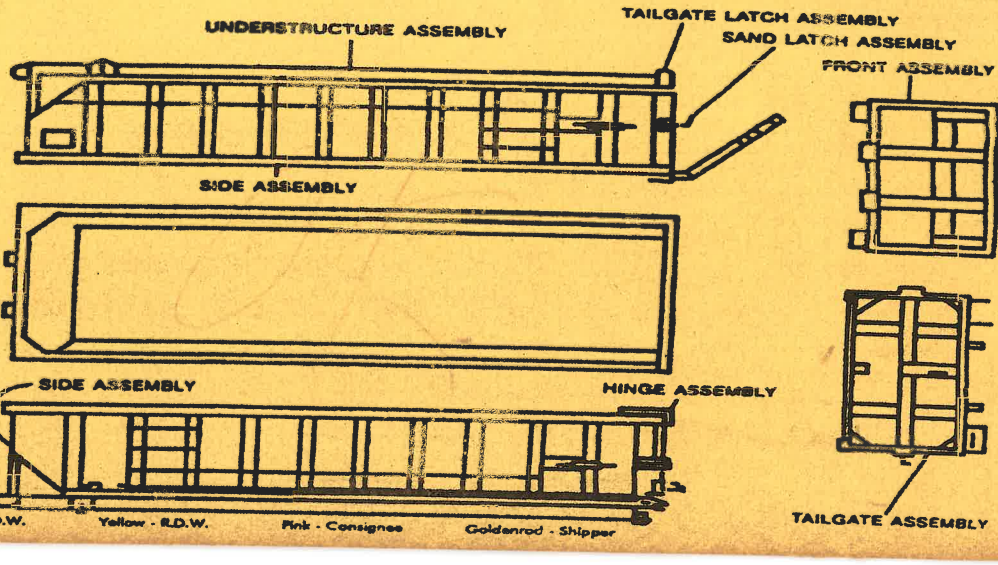

Eaton Printing 426-2647 Form No 022601

White - R.D.W. Yellow - R.D.W. Pink - Consignee Goldenrod - Shipper

WM
Chemical Waste Managment
P.O. Box 55
36964 Alabama Hwy 17
Emelle, AL 35459-0055
(205)652-9721

Manifest Document Number:

SOLUTIA INC
702 CLYDESDALE AVE

ANNISTON, AL 36201-5328

Attn: DONN WILLIAMS

Site Information

SOLUTIA
702 CLYDESDALE AVE

ANNISTON, AL 36201-5328

CERTIFICATE OF DISPOSAL

Chemical Waste Management, Inc. (ALD000622464) has received PCB material from
SOLUTIA

as described on Hazardous Waste Manifest Number 002666527GBF-1
Waste Management, Inc. hereby certifies that the above described material (excluding PCB liquids, if applicable) was landfilled on the dates shown below, in compliance with State and Federal Regulations.

Under civil and criminal penalties of law for the making or submission of false or fraudulent statements or representation (18 U.S.C. 1001 and 15 U.S.C. 2615), I certify that the information contained in or accompanying this document is true, accurate and complete. As to the identified section(s) of this document for which I cannot personally verify truth and accuracy, I certify as the company official having supervisory responsibility for the persons who, acting under my direct instructions, made the verification that this information is true, accurate and complete.

Al Talbott/am

Al Talbott, Safety Manager
September 12, 2015

OSD	Unique ID	Cont #	Profile	Disposed	Description
8/19/15	002666527GBF-01	1	CM9879	9/10/15	ANNISTON PCB SITE CONSENT DECR

Lenda 1195869 Box # 2026

CWMI

Please print or type. (Form designed for use on elite (12-pitch) typewriter.)

Form Approved. OMB No. 2050-0039

UNIFORM HAZARDOUS WASTE MANIFEST

1. Generator ID Number: EXEMPT

2. Page 1 of: 1

3. Emergency Response Phone:

4. Manifest Tracking Number: 002666527 GBF

GENERATOR

5. Generator's Name and Mailing Address

SOLUTIA, INC - ANNISTON PCB SITE
702 CLYDESDALE AVE
ANNISTON AL 36201

Generator's Phone: (601)607-1187

Generator's Site Address (if different than mailing address)

6. Transporter 1 Company Name: Robbie D Wood

U.S. EPA ID Number: ALD067138891

7. Transporter 2 Company Name

U.S. EPA ID Number

8. Designated Facility Name and Site Address

CHEMICAL WASTE MANAGEMENT, INC.
HIGHWAY 17 NORTH, MILE MARKER 163
EMELLE AL 35459

Facility's Phone: (205)652-9721

U.S. EPA ID Number: ALD000622464

9a. HM	9b. U.S. DOT Description (including Proper Shipping Name, Hazard Class, ID Number, and Packing Group (if any))	10. Containers No.	10. Containers Type	11. Total Quantity	12. Unit Wt./Vol.	13. Waste Codes
X	1. UN3432,RQ,POLYCHLORINATED BIPHENYLS,SOLID,9,III CM9879	001	DT CM	~~10000~~ 11,884	K	
	2.			JB		
	3.					
	4.					

14. Special Handling Instructions and Additional Information

1. CM9879 ERG-171 PO#:4355786 OSD: 8/19/15

ERI PROVIDER: CHEMTREC (CONTRACT CCN24117) Autoclave

15. **GENERATOR'S/OFFEROR'S CERTIFICATION:** I hereby declare that the contents of this consignment are fully and accurately described above by the proper shipping name, and are classified, packaged, marked and labeled/placarded, and are in all respects in proper condition for transport according to applicable international and national governmental regulations. If export shipment and I am the Primary Exporter, I certify that the contents of this consignment conform to the terms of the attached EPA Acknowledgment of Consent.
I certify that the waste minimization statement identified in 40 CFR 262.27(a) (if I am a large quantity generator) or (b) (if I am a small quantity generator) is true.

Generator's/Offeror's Printed/Typed Name: DONN WILLIAMS

Signature: Williams

Month: 8 Day: 19 Year: 15

INT'L

16. International Shipments ☐ Import to U.S. ☒ Export from U.S. Port of entry/exit:

Transporter signature (for exports only): Date leaving U.S.:

TRANSPORTER

17. Transporter Acknowledgment of Receipt of Materials

Transporter 1 Printed/Typed Name: Tony Charles Moore Sr

Signature: Tony Charles Moore Sr.

Month: 08 Day: 19 Year: 15

Transporter 2 Printed/Typed Name

Signature

Month: Day: Year:

DESIGNATED FACILITY

18. Discrepancy

18a. Discrepancy Indication Space ☒ Quantity ☐ Type ☐ Residue ☐ Partial Rejection ☐ Full Rejection

Correct to recv'd kg wt per Donn Williams. JB 9/10/15

Manifest Reference Number:

18b. Alternate Facility (or Generator)

U.S. EPA ID Number

Facility's Phone:

18c. Signature of Alternate Facility (or Generator)

Month: Day: Year:

19. Hazardous Waste Report Management Method Codes (i.e., codes for hazardous waste treatment, disposal, and recycling systems)

1.	2.	3.	4.
M132			

20. Designated Facility Owner or Operator: Certification of receipt of hazardous materials covered by the manifest except as noted in Item 18a

Printed/Typed Name: Mal Alexander

Signature: Mal Alexander

Month: 9 Day: 10 Year: 15

EPA Form 8700-22 (Rev. 3-05) Previous editions are obsolete.

DESIGNATED FACILITY TO GENERATOR

23933

PRIORITY PRINTING - MERIDIAN, MISSISSIPPI

WASTE MANAGEMENT

Waste Management
Emelle Facility
WEIGHED ON CARDINAL SCALES

436147

GROSS 66720 lb
09:33AM 09/10/2015

GROSS 40520 lb
02:03PM 09/10/2015

26200
11884K

GROSS
TARE
NET

Customer: Solutia

Transporter: RDW

Truck #: 205 Trailer #: 2026

Receipt #: 508429 Manifest #: 002666527 GBF

DIGITAL WEIGHT INDICATOR & PRINTER

WEIGHED BY MT

FORM 510

Chemical Waste Management
P.O. Box 55
36964 Alabama Hwy 17
Emelle, AL 35459-0055
(205)652-9721

SOLUTIA INC
702 CLYDESDALE AVE

ANNISTON,AL 36201-5328

Attn: DONN WILLIAMS

Site Infomation

SOLUTIA
702 CLYDESDALE AVE

ANNISTON,AL 36201-5328

ACKNOWLEDGEMENT OF RECEIPT OF WASTE SHIPMENT

Generator Name: SOLUTIA
Enclosed is/are your Generator Number Two copy / copies for Alabama Manifest Numbers:

002666527GBF

This copy is to acknowledge that Chemical Waste Management, Inc., of Emelle, Alabama has received your shipment. As a requirement of 40 CFR 264.12 (b), this letter serves to inform you that this facility has the proper permits and will accept your shipment upon completion of waste analysis procedures specified in the facility's Waste Analysis Plan and as determined in the approval waste profile submitted for this/these wastes.

As of September 26, 1997, Chemical Waste Management, Inc., Emelle Alabama (ALD000622464) is operating under a AHWMMA Permit, issued by the Alabama Department of Environmental Management. (RCRA)

Al Talbott
Safety Manager

September 12, 2015

ROBBIE D. WOOD, INC.

BOX OWNER _____

ROLL-OFF BOX # _____ SN# _____

TRACTOR # _____

DRIVER SIGNATURE _____

DRIVERS: WHEN FILLING OUT THIS FORM, WRITE ON HARD SURFACE, PRESS FIRMLY WITH BALL-POINT LOAD #

PICK-UP INFORMATION

DATE: _____ AM/PM

SHIPPER _____

P/U CITY - ST. _____

CUSTOMER SIGNATURE _____

EMPTY ☐

LOADED ☐ MANIFEST # _____

DELIVERY INFORMATION

DATE: _____ AM/PM

LOADED BOX

Unloaded at _____

Drop Loaded at _____

Box returned to: _____

EMPTY BOX DELIVERED TO:

CONSIGNEE _____

CITY, ST _____

CUSTOMER SIGNATURE _____

Indicate below any damage done to roll-off box by circling that portion on the drawing below.

Condition of Tarp: _____

Condition of Bows: _____

No. Bows: _____

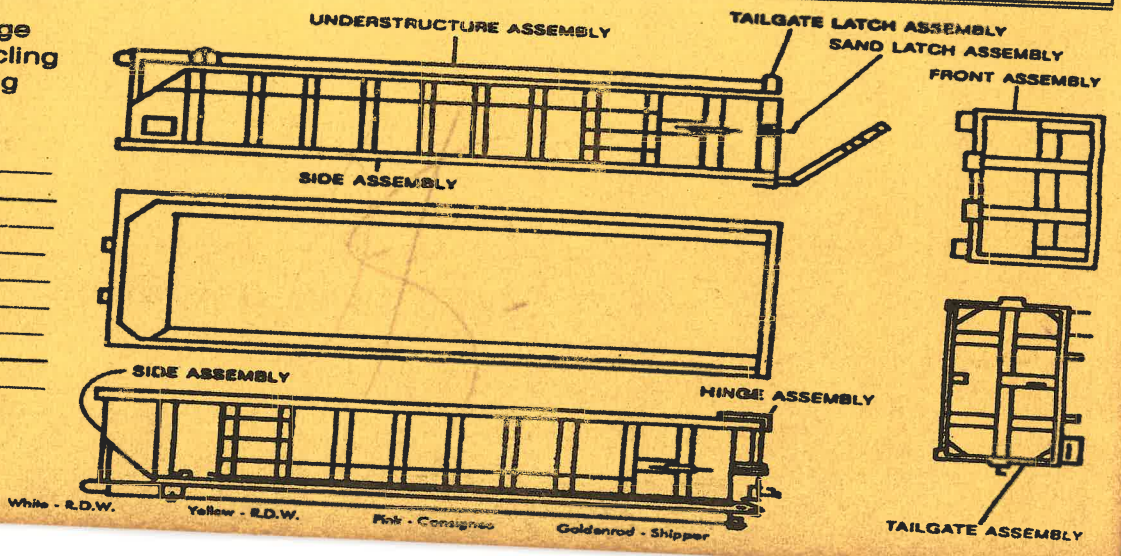

Editor Printing 426-2647 Form No 022601

White - R.D.W. Yellow - R.D.W. Pink - Consignee Goldenrod - Shipper

WM
Chemical Waste Managment
P.O. Box 55
36964 Alabama Hwy 17
Emelle, AL 35459-0055
(205)652-9721

Manifest Document Number:

SOLUTIA INC
702 CLYDESDALE AVE

ANNISTON, AL 36201-5328

Attn: DONN WILLIAMS

Site Information

SOLUTIA
702 CLYDESDALE AVE

ANNISTON, AL 36201-5328

CERTIFICATE OF DISPOSAL

Chemical Waste Management, Inc. (ALD000622464) has received PCB material from
SOLUTIA

as described on Hazardous Waste Manifest Number 002734171GBF-1
Waste Management, Inc. hereby certifies that the above described material (excluding PCB liquids, if applicable) was landfilled on the dates shown below, in compliance with State and Federal Regulations.

Under civil and criminal penalties of law for the making or submission of false or fraudulent statements or representation (18 U.S.C. 1001 and 15 U.S.C. 2615), I certify that the information contained in or accompanying this document is true, accurate and complete. As to the identified section(s) of this document for which I cannot personally verify truth and accuracy, I certify as the company official having supervisory responsibility for the persons who, acting under my direct instructions, made the verification that this information is true, accurate and complete.

Al Talbott/cm

Al Talbott, Safety Manager
September 12, 2015

OSD	Unique ID	Cont #	Profile	Disposed	Description
9/2/15	002734171GBF-01	1	CM9879	9/11/15	ANNISTON PCB SITE CONSENT DECR

Box 1019

CWMI

Please print or type. (Form designed for use on elite (12-pitch) typewriter.)

Form Approved. OMB No. 2050-0039

UNIFORM HAZARDOUS WASTE MANIFEST

1. Generator ID Number	2. Page 1 of	3. Emergency Response Phone	4. Manifest Tracking Number
EXEMPT	1	800-424-9300	002734171 GBF

GENERATOR

5. Generator's Name and Mailing Address

SOLUTIA, INC - ANNISTON PCB SITE
702 CLYDESDALE AVE
ANNISTON AL 36201

Generator's Site Address (if different than mailing address)

Generator's Phone: (601)607-1187

6. Transporter 1 Company Name: Robbie A. Wood Inc — U.S. EPA ID Number: ALD067138891

7. Transporter 2 Company Name — U.S. EPA ID Number

8. Designated Facility Name and Site Address

CHEMICAL WASTE MANAGEMENT, INC.
HIGHWAY 17 NORTH, MILE MARKER 163
EMELLE AL 35459

U.S. EPA ID Number: ALD000622464

Facility's Phone: (205)652-9721

9a. HM	9b. U.S. DOT Description (including Proper Shipping Name, Hazard Class, ID Number, and Packing Group (if any))	10. Containers No.	10. Containers Type	11. Total Quantity	12. Unit Wt./Vol.	13. Waste Codes
X	1. UN3432,RQ,POLYCHLORINATED BIPHENYLS,SOLID,9,III CM9879	001	~~DT~~ CM	~~18000~~ 14125	K	
	2.			JB 9/11/15		
	3.					
	4.					

14. Special Handling Instructions and Additional Information

1. CM9879 ERG-171 PO#: 4255786 OSD: 9/2/15

ERI PROVIDER: CHEMTREC (CONTRACT CCN24117) After clave Box 1019

15. **GENERATOR'S/OFFEROR'S CERTIFICATION:** I hereby declare that the contents of this consignment are fully and accurately described above by the proper shipping name, and are classified, packaged, marked and labeled/placarded, and are in all respects in proper condition for transport according to applicable international and national governmental regulations. If export shipment and I am the Primary Exporter, I certify that the contents of this consignment conform to the terms of the attached EPA Acknowledgment of Consent.
I certify that the waste minimization statement identified in 40 CFR 262.27(a) (if I am a large quantity generator) or (b) (if I am a small quantity generator) is true.

Generator's/Offeror's Printed/Typed Name: DONN WILLIAMS — Signature — Month 9 Day 2 Year 15

INT'L

16. International Shipments ☐ Import to U.S. ☐ Export from U.S. Port of entry/exit:
Transporter signature (for exports only): Date leaving U.S.:

TRANSPORTER

17. Transporter Acknowledgment of Receipt of Materials

Transporter 1 Printed/Typed Name: Candy Carter — Signature — Month 9 Day 2 Year 15

Transporter 2 Printed/Typed Name — Signature — Month Day Year

DESIGNATED FACILITY

18. Discrepancy

18a. Discrepancy Indication Space ☐ Quantity ☐ Type ☐ Residue ☐ Partial Rejection ☐ Full Rejection

Manifest Reference Number:

18b. Alternate Facility (or Generator) — U.S. EPA ID Number

Facility's Phone:

18c. Signature of Alternate Facility (or Generator) — Month Day Year

19. Hazardous Waste Report Management Method Codes (i.e., codes for hazardous waste treatment, disposal, and recycling systems)

1.	2.	3.	4.
M132			

20. Designated Facility Owner or Operator: Certification of receipt of hazardous materials covered by the manifest except as noted in Item 18a

Printed/Typed Name: Mal Alexander — Signature — Month 9 Day 11 Year 15

EPA Form 8700-22 (Rev. 3-05) Previous editions are obsolete.

DESIGNATED FACILITY TO GENERATOR

23933
PRIORITY PRINTING - MERIDIAN, MISSISSIPPI

WASTE MANAGEMENT

Waste Management
Emelle Facility
WEIGHED ON CARDINAL SCALES

436169

GROSS 70660 lb
07:15AM 09/11/2015

GROSS
TARE
NET

GROSS 39520 lb
10:35AM 09/11/2015

31,140
14,125 kg

Customer: Solutia

Transporter: RDW

Truck #: 205 Trailer #: 109

Receipt #: 508448 Manifest #: 002734171 GBF

DIGITAL WEIGHT INDICATOR & PRINTER
WEIGHED BY MA

FORM 510

Chemical Waste Management
P.O. Box 55
36964 Alabama Hwy 17
Emelle, AL 35459-0055
(205)652-9721

SOLUTIA INC
702 CLYDESDALE AVE

ANNISTON,AL 36201-5328

Attn: DONN WILLIAMS

Site Infomation

SOLUTIA
702 CLYDESDALE AVE

ANNISTON,AL 36201-5328

ACKNOWLEDGEMENT OF RECEIPT OF WASTE SHIPMENT

Generator Name: SOLUTIA
Enclosed is/are your Generator Number Two copy / copies for Alabama Manifest Numbers:

002734171GBF

This copy is to acknowledge that Chemical Waste Management, Inc., of Emelle, Alabama has received your shipment. As a requirement of 40 CFR 264.12 (b), this letter serves to inform you that this facility has the proper permits and will accept your shipment upon completion of waste analysis procedures specified in the facility's Waste Analysis Plan and as determined in the approval waste profile submitted for this/these wastes.

As of September 26, 1997, Chemical Waste Management, Inc., Emelle Alabama (ALD000622464) is operating under a AHWMMA Permit, issued by the Alabama Department of Environmental Management. (RCRA)

Al Talbott
Safety Manager

September 12, 2015

CWMI

Please print or type. (Form designed for use on elite (12-pitch) typewriter.) Form Approved. OMB No. 2050-0039

UNIFORM HAZARDOUS WASTE MANIFEST	1. Generator ID Number	2. Page 1 of	3. Emergency Response Phone	4. Manifest Tracking Number
	EXEMPT	1		002734172 GBF

GENERATOR

5. Generator's Name and Mailing Address
SOLUTIA, INC - ANNISTON PCB SITE
702 CLYDESDALE AVE
ANNISTON AL 36201
Generator's Phone: (256)307-1187

Generator's Site Address (if different than mailing address)

6. Transporter 1 Company Name: Robbie D. Wood Inc — U.S. EPA ID Number: ALD067135591

7. Transporter 2 Company Name — U.S. EPA ID Number

8. Designated Facility Name and Site Address
CHEMICAL WASTE MANAGEMENT, INC.
HIGHWAY 17 NORTH, MILE MARKER 163
EMELLE AL 35459
Facility's Phone: (205)652-9721
U.S. EPA ID Number: ALD000622464

9a. HM	9b. U.S. DOT Description (including Proper Shipping Name, Hazard Class, ID Number, and Packing Group (if any))	10. Containers No.	10. Containers Type	11. Total Quantity	12. Unit Wt./Vol.	13. Waste Codes
X	1. UN3432,RQ,POLYCHLORINATED BIPHENYLS,SOLID,9,III CM9879	001	DT	18000	K	
	2.					
	3.					
	4.					

14. Special Handling Instructions and Additional Information
1. CM9879 ERG-171 PO#: 4505766 OSD: 9/3/15 Box 8/2
ERI PROVIDER: CHEMTREC (CONTRACT CCN24117)

15. GENERATOR'S/OFFEROR'S CERTIFICATION: I hereby declare that the contents of this consignment are fully and accurately described above by the proper shipping name, and are classified, packaged, marked and labeled/placarded, and are in all respects in proper condition for transport according to applicable international and national governmental regulations. If export shipment and I am the Primary Exporter, I certify that the contents of this consignment conform to the terms of the attached EPA Acknowledgment of Consent.
I certify that the waste minimization statement identified in 40 CFR 262.27(a) (if I am a large quantity generator) or (b) (if I am a small quantity generator) is true.

Generator's/Offeror's Printed/Typed Name: DONN WILLIAMS — Signature: DWilliams — Month: 9 — Day: 3 — Year: 15

INT'L

16. International Shipments ☐ Import to U.S. ☐ Export from U.S. Port of entry/exit:
Transporter signature (for exports only): Date leaving U.S.:

TRANSPORTER

17. Transporter Acknowledgment of Receipt of Materials

Transporter 1 Printed/Typed Name — Signature — Month — Day — Year

Transporter 2 Printed/Typed Name — Signature — Month — Day — Year

DESIGNATED FACILITY

18. Discrepancy

18a. Discrepancy Indication Space ☐ Quantity ☐ Type ☐ Residue ☐ Partial Rejection ☐ Full Rejection

Manifest Reference Number:

18b. Alternate Facility (or Generator) — U.S. EPA ID Number

Facility's Phone:

18c. Signature of Alternate Facility (or Generator) — Month — Day — Year

19. Hazardous Waste Report Management Method Codes (i.e., codes for hazardous waste treatment, disposal, and recycling systems)

1.	2.	3.	4.

20. Designated Facility Owner or Operator: Certification of receipt of hazardous materials covered by the manifest except as noted in Item 18a

Printed/Typed Name — Signature — Month — Day — Year

EPA Form 8700-22 (Rev. 3-05) Previous editions are obsolete.

GENERATOR'S INITIAL COPY

CWMI

Please print or type. (Form designed for use on elite (12-pitch) typewriter.)

Form Approved. OMB No. 2050-0039

UNIFORM HAZARDOUS WASTE MANIFEST

1. Generator ID Number: EXEMPT
2. Page 1 of 1
3. Emergency Response Phone:
4. Manifest Tracking Number: 002734174 GBF

5. Generator's Name and Mailing Address
SOLUTIA, INC - ANNISTON PCB SITE
702 CLYDESDALE AVE
ANNISTON AL 36201
Generator's Phone: (601)807-1187

Generator's Site Address (if different than mailing address):

6. Transporter 1 Company Name: U.S. EPA ID Number:

7. Transporter 2 Company Name: U.S. EPA ID Number:

8. Designated Facility Name and Site Address
CHEMICAL WASTE MANAGEMENT, INC.
HIGHWAY 17 NORTH, MILE MARKER 163
EMELLE AL 35459
Facility's Phone: (205)652-9721
U.S. EPA ID Number: ALD000622464

9a. HM	9b. U.S. DOT Description (including Proper Shipping Name, Hazard Class, ID Number, and Packing Group (if any))	10. Containers No.	10. Containers Type	11. Total Quantity	12. Unit Wt./Vol.	13. Waste Codes
X	1. UN3432,RQ,POLYCHLORINATED BIPHENYLS,SOLID,9,III CM9879	001	DT	18000	K	
	2.					
	3.					
	4.					

14. Special Handling Instructions and Additional Information
1. CM9879 ERG-171 PO#: 4[illegible]7866 OSD: 9/3/15
ERI PROVIDER: CHEMTREC (CONTRACT CCN24117) Box 25173

15. **GENERATOR'S/OFFEROR'S CERTIFICATION:** I hereby declare that the contents of this consignment are fully and accurately described above by the proper shipping name, and are classified, packaged, marked and labeled/placarded, and are in all respects in proper condition for transport according to applicable international and national governmental regulations. If export shipment and I am the Primary Exporter, I certify that the contents of this consignment conform to the terms of the attached EPA Acknowledgment of Consent.
I certify that the waste minimization statement identified in 40 CFR 262.27(a) (if I am a large quantity generator) or (b) (if I am a small quantity generator) is true.

Generator's/Offeror's Printed/Typed Name: DONN WILLIAMS
Signature: [signature]
Month 9 Day 3 Year 15

16. International Shipments ☐ Import to U.S. ☐ Export from U.S. Port of entry/exit:
Transporter signature (for exports only): Date leaving U.S.:

17. Transporter Acknowledgment of Receipt of Materials
Transporter 1 Printed/Typed Name: [signature]
Signature: [signature]
Month 2 Day 3 Year 15
Transporter 2 Printed/Typed Name:
Signature:
Month Day Year

18. Discrepancy
18a. Discrepancy Indication Space ☐ Quantity ☐ Type ☐ Residue ☐ Partial Rejection ☐ Full Rejection
Manifest Reference Number:

18b. Alternate Facility (or Generator) U.S. EPA ID Number
Facility's Phone:

18c. Signature of Alternate Facility (or Generator) Month Day Year

19. Hazardous Waste Report Management Method Codes (i.e., codes for hazardous waste treatment, disposal, and recycling systems)
1. 2. 3. 4.

20. Designated Facility Owner or Operator: Certification of receipt of hazardous materials covered by the manifest except as noted in Item 18a
Printed/Typed Name Signature Month Day Year

GENERATOR / INT'L / TRANSPORTER / DESIGNATED FACILITY

EPA Form 8700-22 (Rev. 3-05) Previous editions are obsolete.

GENERATOR'S INITIAL COPY

CWMI

Please print or type. (Form designed for use on elite (12-pitch) typewriter.)

Form Approved. OMB No. 2050-0039

UNIFORM HAZARDOUS WASTE MANIFEST

1. Generator ID Number: EXEMPT

2. Page 1 of: 1

3. Emergency Response Phone: 770-387-4149

4. Manifest Tracking Number: 002734177 GBF

GENERATOR

5. Generator's Name and Mailing Address:
SOLUTIA, INC - ANNISTON PCB SITE
702 CLYDESDALE AVE
ANNISTON AL 36201
Generator's Phone: (601)607-1187

Generator's Site Address (if different than mailing address):

6. Transporter 1 Company Name: R D Woods

U.S. EPA ID Number:

7. Transporter 2 Company Name:

U.S. EPA ID Number:

8. Designated Facility Name and Site Address:
CHEMICAL WASTE MANAGEMENT, INC.
HIGHWAY 17 NORTH, MILE MARKER 163
EMELLE AL 35459

U.S. EPA ID Number: ALD000622464

Facility's Phone: (205)652-9721

9a. HM	9b. U.S. DOT Description (including Proper Shipping Name, Hazard Class, ID Number, and Packing Group (if any))	10. Containers No.	10. Containers Type	11. Total Quantity	12. Unit Wt./Vol.	13. Waste Codes
X	1. UN3432,RQ,POLYCHLORINATED BIPHENYLS,SOLID,9,III CM9879	001	DT	18000	K	
	2.					
	3.					
	4.					

14. Special Handling Instructions and Additional Information
1. CM9879 ERG-171 POA: 4255 7866 OSD: 8/21/15 Box 2161
ERI PROVIDER: CHEMTREC (CONTRACT CCN24117) Auto Clave

15. **GENERATOR'S/OFFEROR'S CERTIFICATION:** I hereby declare that the contents of this consignment are fully and accurately described above by the proper shipping name, and are classified, packaged, marked and labeled/placarded, and are in all respects in proper condition for transport according to applicable international and national governmental regulations. If export shipment and I am the Primary Exporter, I certify that the contents of this consignment conform to the terms of the attached EPA Acknowledgment of Consent.
I certify that the waste minimization statement identified in 40 CFR 262.27(a) (if I am a large quantity generator) or (b) (if I am a small quantity generator) is true.

Generator's/Offeror's Printed/Typed Name: DONN WILLIAMS

Signature: DW

Month: 8 Day: 31 Year: 15

INT'L

16. International Shipments ☐ Import to U.S. ☐ Export from U.S. Port of entry/exit:

Transporter signature (for exports only): Date leaving U.S.:

TRANSPORTER

17. Transporter Acknowledgment of Receipt of Materials

Transporter 1 Printed/Typed Name: Randy Gunter

Signature:

Month: 8 Day: 31 Year: 15

Transporter 2 Printed/Typed Name:

Signature:

Month: Day: Year:

DESIGNATED FACILITY

18. Discrepancy

18a. Discrepancy Indication Space ☐ Quantity ☐ Type ☐ Residue ☐ Partial Rejection ☐ Full Rejection

Manifest Reference Number:

18b. Alternate Facility (or Generator)

U.S. EPA ID Number:

Facility's Phone:

18c. Signature of Alternate Facility (or Generator)

Month: Day: Year:

19. Hazardous Waste Report Management Method Codes (i.e., codes for hazardous waste treatment, disposal, and recycling systems)

1.	2.	3.	4.

20. Designated Facility Owner or Operator: Certification of receipt of hazardous materials covered by the manifest except as noted in Item 18a

Printed/Typed Name:

Signature:

Month: Day: Year:

EPA Form 8700-22 (Rev. 3-05) Previous editions are obsolete.

GENERATOR'S INITIAL COPY

CWMI

Please print or type. (Form designed for use on elite (12-pitch) typewriter.)

Form Approved. OMB No. 2050-0039

UNIFORM HAZARDOUS WASTE MANIFEST

1. Generator ID Number: EXEMPT
2. Page 1 of 1
3. Emergency Response Phone:
4. Manifest Tracking Number: 002734178 GBF

5. Generator's Name and Mailing Address
SOLUTIA, INC - ANNISTON PCB SITE
702 CLYDESDALE AVE
ANNISTON AL 36201
Generator's Phone: (601)807-1187

Generator's Site Address (if different than mailing address):

6. Transporter 1 Company Name: RP Woods Robbie R. Wood
U.S. EPA ID Number: ALD067138891

7. Transporter 2 Company Name:
U.S. EPA ID Number:

8. Designated Facility Name and Site Address
CHEMICAL WASTE MANAGEMENT, INC.
HIGHWAY 17 NORTH, MILE MARKER 163
EMELLE AL 35459
Facility's Phone: (205)652-9721
U.S. EPA ID Number: ALD000622464

9a. HM	9b. U.S. DOT Description (including Proper Shipping Name, Hazard Class, ID Number, and Packing Group (if any))	10. Containers No.	10. Containers Type	11. Total Quantity	12. Unit Wt./Vol.	13. Waste Codes
X	1. UN3432,RQ,POLYCHLORINATED BIPHENYLS,SOLID,9,III CM9879	001	DT	18000	K	
	2.					
	3.					
	4.					

14. Special Handling Instructions and Additional Information
1. CM9879 ERG-171 PO#: 42557866 OSD:
ERI PROVIDER: CHEMTREC (CONTRACT CCN24117) Auto Clave

15. **GENERATOR'S/OFFEROR'S CERTIFICATION:** I hereby declare that the contents of this consignment are fully and accurately described above by the proper shipping name, and are classified, packaged, marked and labeled/placarded, and are in all respects in proper condition for transport according to applicable international and national governmental regulations. If export shipment and I am the Primary Exporter, I certify that the contents of this consignment conform to the terms of the attached EPA Acknowledgment of Consent.
I certify that the waste minimization statement identified in 40 CFR 262.27(a) (if I am a large quantity generator) or (b) (if I am a small quantity generator) is true.

Generator's/Offeror's Printed/Typed Name: DONN WILLIAMS
Signature: D.W. Williams
Month Day Year

16. International Shipments ☐ Import to U.S. ☐ Export from U.S. Port of entry/exit:
Transporter signature (for exports only): Date leaving U.S.:

17. Transporter Acknowledgment of Receipt of Materials
Transporter 1 Printed/Typed Name: Anthony Pettel
Signature:
Month Day Year: 8 27 15
Transporter 2 Printed/Typed Name:
Signature:
Month Day Year

18. Discrepancy
18a. Discrepancy Indication Space ☐ Quantity ☐ Type ☐ Residue ☐ Partial Rejection ☐ Full Rejection
Manifest Reference Number:
18b. Alternate Facility (or Generator)
U.S. EPA ID Number:
Facility's Phone:
18c. Signature of Alternate Facility (or Generator)
Month Day Year

19. Hazardous Waste Report Management Method Codes (i.e., codes for hazardous waste treatment, disposal, and recycling systems)
1. 2. 3. 4.

20. Designated Facility Owner or Operator: Certification of receipt of hazardous materials covered by the manifest except as noted in Item 18a
Printed/Typed Name
Signature
Month Day Year

GENERATOR / INT'L / TRANSPORTER / DESIGNATED FACILITY

EPA Form 8700-22 (Rev. 3-05) Previous editions are obsolete.

GENERATOR'S INITIAL COPY

Robbie D. Wood, Inc.

P.O. BOX 125 DOLOMITE, ALABAMA 35061

BILL OF LADING NO. MC 142393 169181

SHIPPER Monsato / Soluti	LOADING CITY/STATE Anniston AL	MANIFEST NO.
CONSIGNEE	DESTINATION Emelle, AL	002734178
		DATE SHIPPED 8/28/15
Chemical Waste	TRACTOR NO. 384 / TRAILER NO. 1636 / BOX NO. 796	LOAD NO. 1196367

COMP NO	LOADING TEMP ° F	COMMODITY	UNIT	QUANTITY
		3132 PCB		

QUANTITY	
	Gross
	Tare
	Net
	Tons

LOADING TIME — IN M. / OUT M. AUTHORIZATION - LOADING DEMURRAGE

— — — — — — — — — DENTENTION RECORD — — — EXPLAIN TIME SPENT — — — —

UNLOADING TIME — IN M. / OUT M. AUTHORIZATION - UNLOADING DEMURRAGE

GOVERNED BY TARIFFS AND CLASSIFICATIONS ISSUED BY THE CARRIER AND/OR ITS AGENTS

SHIPPER PER

CARRIER PER

RECEIVED THE ABOVE-DESCRIBED PROPERTY IN GOOD CONDITION EXCEPT AS NOTED

FIRM

BY

SHOW COMPLETE COMPANY NAME AND SIGNATURE INITIALS NOT ACCEPTED — DELIVERY DATE

White - R. D. W. Yellow - R. D. W. Pink - Consignee Goldenrod - Shipper

Eaton Printing 112602 426-2647

WM
Chemical Waste Managment
P.O. Box 55
36964 Alabama Hwy 17
Emelle, AL 35459-0055
(205)652-9721

Manifest Document Number:

SOLUTIA INC
702 CLYDESDALE AVE

ANNISTON, AL 36201-5328

Attn: DONN WILLIAMS

Site Information

SOLUTIA
702 CLYDESDALE AVE

ANNISTON, AL 36201-5328

CERTIFICATE OF DISPOSAL

Chemical Waste Management, Inc. (ALD000622464) has received PCB material from
SOLUTIA

as described on Hazardous Waste Manifest Number 002734180GBF-1
Waste Management, Inc. hereby certifies that the above described material (excluding PCB liquids, if applicable) was landfilled on the dates shown below, in compliance with State and Federal Regulations.

Under civil and criminal penalties of law for the making or submission of false or fraudulent statements or representation (18 U.S.C. 1001 and 15 U.S.C. 2615), I certify that the information contained in or accompanying this document is true, accurate and complete. As to the identified section(s) of this document for which I cannot personally verify truth and accuracy, I certify as the company official having supervisory responsibility for the persons who, acting under my direct instructions, made the verification that this information is true, accurate and complete.

Al Talbott / cm

Al Talbott, Safety Manager
September 02, 2015

OSD	Unique ID	Cont #	Profile	Disposed	Description
8/27/15	002734180GBF-01	1	CM9879	8/28/15	ANNISTON PCB SITE CONSENT DECR

Box # 25150 Load # 119654

CWMI

Please print or type. (Form designed for use on elite (12-pitch) typewriter.)

Form Approved. OMB No. 2050-0039

UNIFORM HAZARDOUS WASTE MANIFEST	1. Generator ID Number	2. Page 1 of	3. Emergency Response Phone	4. Manifest Tracking Number
	EXEMPT	1		002734180 GBF

GENERATOR

5. Generator's Name and Mailing Address

SOLUTIA, INC - ANNISTON PCB SITE
702 CLYDESDALE AVE
ANNISTON AL 36201
Generator's Phone: (256)307-1187

Generator's Site Address (if different than mailing address)

6. Transporter 1 Company Name: R D Wolds Rabbit Wood — U.S. EPA ID Number: ALD067138891

7. Transporter 2 Company Name — U.S. EPA ID Number

8. Designated Facility Name and Site Address

CHEMICAL WASTE MANAGEMENT, INC.
HIGHWAY 17 NORTH, MILE MARKER 163
EMELLE AL 35459

U.S. EPA ID Number: ALD000622464

Facility's Phone: (205)652-9721

9a. HM	9b. U.S. DOT Description (including Proper Shipping Name, Hazard Class, ID Number, and Packing Group (if any))	10. Containers No.	10. Containers Type	11. Total Quantity	12. Unit Wt./Vol.	13. Waste Codes
X	1. UN3432,RQ,POLYCHLORINATED BIPHENYLS,SOLID,9,III CMBB70	001	DT	15,918 18000	K	
	2.			18000		
	3.					
	4.					

14. Special Handling Instructions and Additional Information
1. CMBB70 ERG-171 POR: 4255786 OSD: 8/27/15 Box 25150
ERI PROVIDER: CHEMTREC (CONTRACT CCN24117)

15. **GENERATOR'S/OFFEROR'S CERTIFICATION:** I hereby declare that the contents of this consignment are fully and accurately described above by the proper shipping name, and are classified, packaged, marked and labeled/placarded, and are in all respects in proper condition for transport according to applicable international and national governmental regulations. If export shipment and I am the Primary Exporter, I certify that the contents of this consignment conform to the terms of the attached EPA Acknowledgment of Consent.
I certify that the waste minimization statement identified in 40 CFR 262.27(a) (if I am a large quantity generator) or (b) (if I am a small quantity generator) is true.

Generator's/Offeror's Printed/Typed Name: DONN WILLIAMS — Signature — Month: 8 Day: 27 Year: 15

INT'L

16. International Shipments ☐ Import to U.S. ☐ Export from U.S. Port of entry/exit:
Transporter signature (for exports only): Date leaving U.S.:

TRANSPORTER

17. Transporter Acknowledgment of Receipt of Materials

Transporter 1 Printed/Typed Name: R D Wolds Rabbit Wood — Signature — Month: 08 Day: 27 Year: 15

Transporter 2 Printed/Typed Name — Signature — Month — Day — Year

DESIGNATED FACILITY

18. Discrepancy

18a. Discrepancy Indication Space ☑ Quantity ☐ Type ☐ Residue ☐ Partial Rejection ☐ Full Rejection

Received 1 drum of PCB Solids per Donn Williams 10/2/15 — Manifest Reference Number:

18b. Alternate Facility (or Generator) — U.S. EPA ID Number

Facility's Phone:

18c. Signature of Alternate Facility (or Generator) — Month — Day — Year

19. Hazardous Waste Report Management Method Codes (i.e., codes for hazardous waste treatment, disposal, and recycling systems)

1.	2.	3.	4.
H132			

20. Designated Facility Owner or Operator: Certification of receipt of hazardous materials covered by the manifest except as noted in Item 18a

Printed/Typed Name: Judy Bankhead — Signature: Judy Bankhead — Month: 08 Day: 28 Year: 15

EPA Form 8700-22 (Rev. 3-05) Previous editions are obsolete.

DESIGNATED FACILITY TO GENERATOR

23933

PRIORITY PRINTING - MERIDIAN, MISSISSIPPI

WASTE MANAGEMENT

Waste Management
Emelle Facility
WEIGHED ON CARDINAL SCALES

436846

GROSS 77300 lb

01:57PM 08/28/2015

GROSS

TARE

NET

GROSS 44060 lb

03:00PM 08/28/2015

33,240

15078kg

Customer: Solutia Inc

Transporter: RDW

Truck #: 435 Trailer #: 3515-O

Receipt #: 508192 Manifest #: 002734180GOF

DIGITAL WEIGHT INDICATOR & PRINTER

WEIGHED BY JB

FORM 510

Chemical Waste Management
P.O. Box 55
36964 Alabama Hwy 17
Emelle, AL 35459-0055
(205)652-9721

SOLUTIA INC
702 CLYDESDALE AVE

ANNISTON,AL 36201-5328

Attn: DONN WILLIAMS

Site Infomation

SOLUTIA
702 CLYDESDALE AVE

ANNISTON,AL 36201-5328

ACKNOWLEDGEMENT OF RECEIPT OF WASTE SHIPMENT

Generator Name: SOLUTIA
Enclosed is/are your Generator Number Two copy / copies for Alabama Manifest Numbers:

002734180GBF

This copy is to acknowledge that Chemical Waste Management, Inc., of Emelle, Alabama has received your shipment. As a requirement of 40 CFR 264.12 (b), this letter serves to inform you that this facility has the proper permits and will accept your shipment upon completion of waste analysis procedures specified in the facility's Waste Analysis Plan and as determined in the approval waste profile submitted for this/these wastes.

As of September 26, 1997, Chemical Waste Management, Inc., Emelle Alabama (ALD000622464) is operating under a AHWMMA Permit, issued by the Alabama Department of Environmental Management. (RCRA)

Al Talbott
Safety Manager

September 02, 2015

CWMI

Please print or type. (Form designed for use on elite (12-pitch) typewriter.)

Form Approved. OMB No. 2050-0039

UNIFORM HAZARDOUS WASTE MANIFEST

1. Generator ID Number: EXEMPT
2. Page 1 of 1
3. Emergency Response Phone:
4. Manifest Tracking Number: 002734180 GBF

5. Generator's Name and Mailing Address
SOLUTIA, INC - ANNISTON PCB SITE
702 CLYDESDALE AVE
ANNISTON AL 36201
Generator's Phone: (601)207-1187

Generator's Site Address (if different than mailing address)

6. Transporter 1 Company Name: R D Woods
U.S. EPA ID Number: ALD067138891

7. Transporter 2 Company Name:
U.S. EPA ID Number:

8. Designated Facility Name and Site Address
CHEMICAL WASTE MANAGEMENT, INC.
HIGHWAY 17 NORTH, MILE MARKER 163
EMELLE AL 35459
Facility's Phone: (205)852-9721
U.S. EPA ID Number: ALD000622464

9a. HM	9b. U.S. DOT Description (including Proper Shipping Name, Hazard Class, ID Number, and Packing Group (if any))	10. Containers No.	10. Containers Type	11. Total Quantity	12. Unit Wt./Vol.	13. Waste Codes
X	1. UN3432,RQ,POLYCHLORINATED BIPHENYLS,SOLID,9,III CM9879	001	DT	18000	K	
	2.					
	3.					
	4.					

14. Special Handling Instructions and Additional Information
1. CM9879 ERG-171 PO#: 42557866 OSD: 6/27/15 Box 25150
ERI PROVIDER: CHEMTREC (CONTRACT CCN24117) Auto Chlor

15. **GENERATOR'S/OFFEROR'S CERTIFICATION:** I hereby declare that the contents of this consignment are fully and accurately described above by the proper shipping name, and are classified, packaged, marked and labeled/placarded, and are in all respects in proper condition for transport according to applicable international and national governmental regulations. If export shipment and I am the Primary Exporter, I certify that the contents of this consignment conform to the terms of the attached EPA Acknowledgment of Consent.
I certify that the waste minimization statement identified in 40 CFR 262.27(a) (if I am a large quantity generator) or (b) (if I am a small quantity generator) is true.

Generator's/Offeror's Printed/Typed Name: DONN WILLIAMS
Signature: [signature]
Month 8 Day 27 Year 15

16. International Shipments ☐ Import to U.S. ☐ Export from U.S. Port of entry/exit:
Transporter signature (for exports only): Date leaving U.S.:

17. Transporter Acknowledgment of Receipt of Materials
Transporter 1 Printed/Typed Name: William M Woods TR
Signature: [signature]
Month 08 Day 27 Year 15
Transporter 2 Printed/Typed Name:
Signature:
Month Day Year

18. Discrepancy
18a. Discrepancy Indication Space ☐ Quantity ☐ Type ☐ Residue ☐ Partial Rejection ☐ Full Rejection
Manifest Reference Number:

18b. Alternate Facility (or Generator)
U.S. EPA ID Number
Facility's Phone:

18c. Signature of Alternate Facility (or Generator)
Month Day Year

19. Hazardous Waste Report Management Method Codes (i.e., codes for hazardous waste treatment, disposal, and recycling systems)
1. 2. 3. 4.

20. Designated Facility Owner or Operator: Certification of receipt of hazardous materials covered by the manifest except as noted in Item 18a
Printed/Typed Name
Signature
Month Day Year

GENERATOR / INT'L / TRANSPORTER / DESIGNATED FACILITY

EPA Form 8700-22 (Rev. 3-05) Previous editions are obsolete.

GENERATOR'S INITIAL COPY

CWMI

Please print or type. (Form designed for use on elite (12-pitch) typewriter.)

Form Approved. OMB No. 2050-0039

UNIFORM HAZARDOUS WASTE MANIFEST

1. Generator ID Number: EXEMPT

2. Page 1 of: 1

3. Emergency Response Phone:

4. Manifest Tracking Number: 002734181 GBF

5. Generator's Name and Mailing Address
SOLUTIA, INC - ANNISTON PCB SITE
702 CLYDESDALE AVE
ANNISTON AL 36201
Generator's Phone: (256) 237-1107

Generator's Site Address (if different than mailing address)

6. Transporter 1 Company Name: R D Wood — Robin Dawson

U.S. EPA ID Number: ALD000738691

7. Transporter 2 Company Name:

U.S. EPA ID Number:

8. Designated Facility Name and Site Address
CHEMICAL WASTE MANAGEMENT, INC.
HIGHWAY 17 NORTH, MILE MARKER 163
EMELLE AL 35459
Facility's Phone: (205)652-9721

U.S. EPA ID Number: ALD000622464

9a. HM	9b. U.S. DOT Description (including Proper Shipping Name, Hazard Class, ID Number, and Packing Group (if any))	10. Containers No.	10. Containers Type	11. Total Quantity	12. Unit Wt./Vol.	13. Waste Codes
X	1. UN3432,RQ,POLYCHLORINATED BIPHENYLS,SOLID,9,III CM9879	001	DT	18000	K	
	2.					
	3.					
	4.					

14. Special Handling Instructions and Additional Information
1. CM9879 ERG-171 PO#: 4255736 OSD: 6/26/15
ERI PROVIDER: CHEMTREC (CONTRACT CCN24117)
Box 058

15. **GENERATOR'S/OFFEROR'S CERTIFICATION:** I hereby declare that the contents of this consignment are fully and accurately described above by the proper shipping name, and are classified, packaged, marked and labeled/placarded, and are in all respects in proper condition for transport according to applicable international and national governmental regulations. If export shipment and I am the Primary Exporter, I certify that the contents of this consignment conform to the terms of the attached EPA Acknowledgment of Consent.
I certify that the waste minimization statement identified in 40 CFR 262.27(a) (if I am a large quantity generator) or (b) (if I am a small quantity generator) is true.

Generator's/Offeror's Printed/Typed Name: DONN WILLIAMS

Signature:

Month: 6 Day: 26 Year: 15

INT'L

16. International Shipments ☐ Import to U.S. ☐ Export from U.S. Port of entry/exit:
Transporter signature (for exports only): Date leaving U.S.:

TRANSPORTER

17. Transporter Acknowledgment of Receipt of Materials

Transporter 1 Printed/Typed Name: Anthony Scott, II

Signature:

Month: 6 Day: 26 Year: 15

Transporter 2 Printed/Typed Name:

Signature:

Month: Day: Year:

DESIGNATED FACILITY

18. Discrepancy

18a. Discrepancy Indication Space ☐ Quantity ☐ Type ☐ Residue ☐ Partial Rejection ☐ Full Rejection

Manifest Reference Number:

18b. Alternate Facility (or Generator)

U.S. EPA ID Number:

Facility's Phone:

18c. Signature of Alternate Facility (or Generator)

Month: Day: Year:

19. Hazardous Waste Report Management Method Codes (i.e., codes for hazardous waste treatment, disposal, and recycling systems)

1.	2.	3.	4.

20. Designated Facility Owner or Operator: Certification of receipt of hazardous materials covered by the manifest except as noted in Item 18a

Printed/Typed Name:

Signature:

Month: Day: Year:

EPA Form 8700-22 (Rev. 3-05) Previous editions are obsolete.

GENERATOR'S INITIAL COPY

CWMI

Please print or type. (Form designed for use on elite (12-pitch) typewriter.)

Form Approved. OMB No. 2050-0039

UNIFORM HAZARDOUS WASTE MANIFEST

1. Generator ID Number: EXEMPT

2. Page 1 of: 1

3. Emergency Response Phone:

4. Manifest Tracking Number: 002734181 GBF

5. Generator's Name and Mailing Address
SOLUTIA, INC - ANNISTON PCB SITE
702 CLYDESDALE AVE
ANNISTON AL 36201
Generator's Phone: (256) 237-1107

Generator's Site Address (if different than mailing address)

6. Transporter 1 Company Name: R D Wood — Robin Dawson

U.S. EPA ID Number: ALD000738691

7. Transporter 2 Company Name:

U.S. EPA ID Number:

8. Designated Facility Name and Site Address
CHEMICAL WASTE MANAGEMENT, INC.
HIGHWAY 17 NORTH, MILE MARKER 163
EMELLE AL 35459
Facility's Phone: (205)652-9721

U.S. EPA ID Number: ALD000622464

9a. HM	9b. U.S. DOT Description (including Proper Shipping Name, Hazard Class, ID Number, and Packing Group (if any))	10. Containers No.	10. Containers Type	11. Total Quantity	12. Unit Wt./Vol.	13. Waste Codes
X	1. UN3432,RQ,POLYCHLORINATED BIPHENYLS,SOLID,9,III CM9879	001	DT	18000	K	
	2.					
	3.					
	4.					

14. Special Handling Instructions and Additional Information
1. CM9879 ERG-171 PO#: 4255736 OSD: 6/26/15
ERI PROVIDER: CHEMTREC (CONTRACT CCN24117)
Box 058

15. **GENERATOR'S/OFFEROR'S CERTIFICATION:** I hereby declare that the contents of this consignment are fully and accurately described above by the proper shipping name, and are classified, packaged, marked and labeled/placarded, and are in all respects in proper condition for transport according to applicable international and national governmental regulations. If export shipment and I am the Primary Exporter, I certify that the contents of this consignment conform to the terms of the attached EPA Acknowledgment of Consent.
I certify that the waste minimization statement identified in 40 CFR 262.27(a) (if I am a large quantity generator) or (b) (if I am a small quantity generator) is true.

Generator's/Offeror's Printed/Typed Name: DONN WILLIAMS

Signature:

Month: 6 Day: 26 Year: 15

INT'L

16. International Shipments ☐ Import to U.S. ☐ Export from U.S. Port of entry/exit:
Transporter signature (for exports only): Date leaving U.S.:

TRANSPORTER

17. Transporter Acknowledgment of Receipt of Materials

Transporter 1 Printed/Typed Name: Anthony Scott, II

Signature:

Month: 6 Day: 26 Year: 15

Transporter 2 Printed/Typed Name:

Signature:

Month: Day: Year:

DESIGNATED FACILITY

18. Discrepancy

18a. Discrepancy Indication Space ☐ Quantity ☐ Type ☐ Residue ☐ Partial Rejection ☐ Full Rejection

Manifest Reference Number:

18b. Alternate Facility (or Generator)

U.S. EPA ID Number:

Facility's Phone:

18c. Signature of Alternate Facility (or Generator)

Month: Day: Year:

19. Hazardous Waste Report Management Method Codes (i.e., codes for hazardous waste treatment, disposal, and recycling systems)

1.	2.	3.	4.

20. Designated Facility Owner or Operator: Certification of receipt of hazardous materials covered by the manifest except as noted in Item 18a

Printed/Typed Name:

Signature:

Month: Day: Year:

EPA Form 8700-22 (Rev. 3-05) Previous editions are obsolete.

GENERATOR'S INITIAL COPY

Box 2110

CWMI

Please print or type. (Form designed for use on elite (12-pitch) typewriter.)

Form Approved. OMB No. 2050-0039

UNIFORM HAZARDOUS WASTE MANIFEST

1. Generator ID Number: EXEMPT
2. Page 1 of: 1
3. Emergency Response Phone: 800 424 9300
4. Manifest Tracking Number: 002734182 GBF

5. Generator's Name and Mailing Address
SOLUTIA, INC - ANNISTON PCB SITE
702 CLYDESDALE AVE
ANNISTON AL 36201
Generator's Phone: (601)607-1187

Generator's Site Address (if different than mailing address)

6. Transporter 1 Company Name: R D Woods Robbie D Woods Inc
U.S. EPA ID Number: ALD067138891

7. Transporter 2 Company Name
U.S. EPA ID Number

8. Designated Facility Name and Site Address
CHEMICAL WASTE MANAGEMENT, INC.
HIGHWAY 17 NORTH, MILE MARKER 163
EMELLE AL 35459
Facility's Phone: (205)652-9721
U.S. EPA ID Number: ALD000622484

9a. HM	9b. U.S. DOT Description (including Proper Shipping Name, Hazard Class, ID Number, and Packing Group (if any))	10. Containers No.	10. Containers Type	11. Total Quantity	12. Unit Wt./Vol.	13. Waste Codes
X	1. UN3432,RQ,POLYCHLORINATED BIPHENYLS,SOLID,9,III CM9879	001	DT CM	~~18000~~ 12,265	K	
	2.			JB 9/4/15		
	3.					
	4.					

14. Special Handling Instructions and Additional Information
1. CM9879 ERG-171 PO#: 4255 1866 OSD: 9-1-15
ERI PROVIDER: CHEMTREC (CONTRACT CCN24117) Auto Clave

15. GENERATOR'S/OFFEROR'S CERTIFICATION: I hereby declare that the contents of this consignment are fully and accurately described above by the proper shipping name, and are classified, packaged, marked and labeled/placarded, and are in all respects in proper condition for transport according to applicable international and national governmental regulations. If export shipment and I am the Primary Exporter, I certify that the contents of this consignment conform to the terms of the attached EPA Acknowledgment of Consent.
I certify that the waste minimization statement identified in 40 CFR 262.27(a) (if I am a large quantity generator) or (b) (if I am a small quantity generator) is true.

Generator's/Offeror's Printed/Typed Name: DONN WILLIAMS
Signature: DWilliams
Month: 9 Day: 1 Year: 15

INT'L
16. International Shipments ☐ Import to U.S. ☐ Export from U.S. Port of entry/exit:
Transporter signature (for exports only): Date leaving U.S.:

TRANSPORTER
17. Transporter Acknowledgment of Receipt of Materials
Transporter 1 Printed/Typed Name: Randy Gunter
Signature: Randy Gunter
Month: 9 Day: 1 Year: 15
Transporter 2 Printed/Typed Name:
Signature:
Month: Day: Year:

DESIGNATED FACILITY
18. Discrepancy
18a. Discrepancy Indication Space ☒ Quantity ☐ Type ☐ Residue ☐ Partial Rejection ☐ Full Rejection
Corrected to rec'd by wt per Donn Williams JB 9/4/15
Manifest Reference Number:
18b. Alternate Facility (or Generator)
U.S. EPA ID Number
Facility's Phone:
18c. Signature of Alternate Facility (or Generator)
Month: Day: Year:

19. Hazardous Waste Report Management Method Codes (i.e., codes for hazardous waste treatment, disposal, and recycling systems)
1. M132 2. 3. 4.

20. Designated Facility Owner or Operator: Certification of receipt of hazardous materials covered by the manifest except as noted in Item 18a
Printed/Typed Name: Mal Alexander
Signature: Mal Alexander
Month: 9 Day: 14 Year: 15

EPA Form 8700-22 (Rev. 3-05) Previous editions are obsolete.

DESIGNATED FACILITY TO DESTINATION STATE (IF REQUIRED)

13

k2G

CWM, INC. - EMELLE * ***** Receipt # 588492 ***** Page - 1

Date/Time In 9/14/15 10:15
Load Type Rolloff Federal EPA ID ALD067138891
Transporter ROBBIE D WOOD INC
DOLOMITE AL

Truck Number 204 Trailer/Contar #1 2110 #2 #3

** WEIGHT SUMMARY **
Gross 61580.00
Tare 34540.00
Net 27040.00
Adj. 27040.00
Adj. Net .00
12,265kg

Rcpt Ln#	Doc Ln#	Document Number	Profile Sales	Profile Generator Invoicing Customer	Cnt #	Cnt Code	Total Quan.	W/V	DCS Units	PCB	Sched Cat	Federal EPA Waste Status	ADEM #
1	1	002734182688F	CH9879	SOLUTIA ANNISTON AL	1	CH	16000.00	K	Kilogram	Y	PLFB	GC Undeterminable	073116-C007
	Doc Seq # 1		ENE	SOLUTIA			SUBCC Value - NO P.O. Num						COD Req'd

>51% OR <51% DEBRIS (CIRCLE)
PREFILLED VAULT Y OR N (CIRCLE)
>51% OR <51% HAC 10% INSPECTION (CIRCLE)
BULK MATERIAL ONLY:
SAMPLED/INSPECTED_____ FREE LIQUIDS DETECTED? YES / NO
SELECT MATERIAL/NON-SELECT MATERIAL_____ WIND DISPERSAL MATERIAL? YES / NO

PHYSICAL DESCRIPTION OF WASTE:_____ SAMPLER/APPROVAL_____

SPOT SAMPLE:____B15-_____ PHYS. DESCRIPTION_____
RAD. SCREEN POS NEG
IGN. SCREEN POS NEG
H20 SOL. S F PT/SOL
H20 RXN/TEMP. INITIAL NO RXN REACTS___
H20 RXN/TEMP. SMIN. NO RXN REACTS
ph (PAPER)_____
CN__SCREEN + - (PRUSSIAN BLUE)_ __ __
CN SCREEN + - (CYANTESMO)
SULFIDE SCREEN + -
ADDITIONAL ANALYTICAL REQ'D? Y N
DESCRIBE:
PCB CONC. (PPM)_____ SULFIDE (9030)_____
%H20 BY KF_____ CYANIDE (9010C)_____ TAB WASTE Y N
PAINT FILTER TEST/ P F SPEC. GRAVITY_____ BNZ CONC.____PPM
COMMENTS:(SAFETY/OPERATIONAL)_____

COMPAT. TEST W/_____ OK___RXN__
ADD'L SPOT SAMPLE ATTACHED? Y N
DISPOSAL METHOD: S SP ST-3 ST-3/PT P-ST-3 P-ST-3/PT ST-5 ST-5/PT P-ST-5 S01-PTA B-PIN OTHER_____
P-ST-5/PT ST-8 ST-8/PT HIC HAC (HAC INSPECT) F INC SP-VS PCB-HAC P-HAC
P-ST-8 P-ST-8/PT VS-3 VS-5 VS-8
INDICATOR PARAMETER WILL BE CIRCLED
B-HAC LOADS REQUIRING INSPECTION THAT ARE FOUND TO BE LESS THAN 51% MUST
BE RETURNED TO LAB AND PLACED ON HOLD._____
RELEASED FOR DISPOSAL BY:_____ DATE:_____

CWMI

Please print or type. (Form designed for use on elite (12-pitch) typewriter.)

Form Approved. OMB No. 2050-0039

UNIFORM HAZARDOUS WASTE MANIFEST	1. Generator ID Number	2. Page 1 of	3. Emergency Response Phone	4. Manifest Tracking Number
	EXEMPT	1		002734183 GBF

GENERATOR

5. Generator's Name and Mailing Address
SOLUTIA, INC - ANNISTON PCB SITE
702 CLYDESDALE AVE
ANNISTON AL 36201
Generator's Phone: (256)237-1187

Generator's Site Address (if different than mailing address)

6. Transporter 1 Company Name
R D Winds

U.S. EPA ID Number
ALD017138591

7. Transporter 2 Company Name

U.S. EPA ID Number

8. Designated Facility Name and Site Address
CHEMICAL WASTE MANAGEMENT, INC.
HIGHWAY 17 NORTH, MILE MARKER 163
EMELLE AL 36459

U.S. EPA ID Number
ALD000622464

Facility's Phone: (205)652-9721

9a. HM	9b. U.S. DOT Description (including Proper Shipping Name, Hazard Class, ID Number, and Packing Group (if any))	10. Containers No.	10. Containers Type	11. Total Quantity	12. Unit Wt./Vol.	13. Waste Codes
X	1. UN3432,RQ,POLYCHLORINATED BIPHENYLS,SOLID,9,III CM9879	001	DT	18000	K	
	2.					
	3.					
	4.					

14. Special Handling Instructions and Additional Information
1. CM9879 ERG-171 POE: 4255756b OSD: 9/1/15
ERI PROVIDER: CHEMTREC (CONTRACT CCN24117) Auto Claim

15. GENERATOR'S/OFFEROR'S CERTIFICATION: I hereby declare that the contents of this consignment are fully and accurately described above by the proper shipping name, and are classified, packaged, marked and labeled/placarded, and are in all respects in proper condition for transport according to applicable international and national governmental regulations. If export shipment and I am the Primary Exporter, I certify that the contents of this consignment conform to the terms of the attached EPA Acknowledgment of Consent.
I certify that the waste minimization statement identified in 40 CFR 262.27(a) (if I am a large quantity generator) or (b) (if I am a small quantity generator) is true.

Generator's/Offeror's Printed/Typed Name: DONN WILLIAMS
Signature: D Williams
Month: 9 Day: 1 Year: 15

INTL

16. International Shipments ☐ Import to U.S. ☐ Export from U.S. Port of entry/exit:
Transporter signature (for exports only): Date leaving U.S.:

TRANSPORTER

17. Transporter Acknowledgment of Receipt of Materials

Transporter 1 Printed/Typed Name: Randy Gunter
Signature:
Month: 9 Day: 1 Year: 15

Transporter 2 Printed/Typed Name:
Signature:
Month: Day: Year:

DESIGNATED FACILITY

18. Discrepancy

18a. Discrepancy Indication Space ☐ Quantity ☐ Type ☐ Residue ☐ Partial Rejection ☐ Full Rejection

Manifest Reference Number:

18b. Alternate Facility (or Generator)
U.S. EPA ID Number

Facility's Phone:

18c. Signature of Alternate Facility (or Generator)
Month: Day: Year:

19. Hazardous Waste Report Management Method Codes (i.e., codes for hazardous waste treatment, disposal, and recycling systems)

1.	2.	3.	4.

20. Designated Facility Owner or Operator: Certification of receipt of hazardous materials covered by the manifest except as noted in Item 18a

Printed/Typed Name:
Signature:
Month: Day: Year:

EPA Form 8700-22 (Rev. 3-05) Previous editions are obsolete.

GENERATOR'S INITIAL COPY

Box 1031

CWMI

Please print or type. (Form designed for use on elite (12-pitch) typewriter.)

Form Approved. OMB No. 2050-0039

UNIFORM HAZARDOUS WASTE MANIFEST

1. Generator ID Number: EXEMPT

2. Page 1 of: 1

3. Emergency Response Phone:

4. Manifest Tracking Number: 002734184 GBF

GENERATOR

5. Generator's Name and Mailing Address
SOLUTIA, INC - ANNISTON PCB SITE
702 CLYDESDALE AVE
ANNISTON AL 36201
Generator's Phone: (601)807-1187

Generator's Site Address (if different than mailing address)

6. Transporter 1 Company Name: R D Woods

U.S. EPA ID Number: ALD061735791

7. Transporter 2 Company Name:

U.S. EPA ID Number:

8. Designated Facility Name and Site Address
CHEMICAL WASTE MANAGEMENT, INC.
HIGHWAY 17 NORTH, MILE MARKER 163
EMELLE AL 35459
Facility's Phone: (205)652-9721

U.S. EPA ID Number: ALD000622464

9a. HM	9b. U.S. DOT Description (including Proper Shipping Name, Hazard Class, ID Number, and Packing Group (if any))	10. Containers No.	10. Containers Type	11. Total Quantity	12. Unit Wt./Vol.	13. Waste Codes
X	1. UN3432,RQ,POLYCHLORINATED BIPHENYLS,SOLID,9,III CM9879	001	DT	18000	K	
	2.					
	3.					
	4.					

14. Special Handling Instructions and Additional Information
1. CM9879 ERG-171 POR: 4255791 OSD: 9/2/15

ERI PROVIDER: CHEMTREC (CONTRACT CCN24117) EMERGENCY

15. **GENERATOR'S/OFFEROR'S CERTIFICATION:** I hereby declare that the contents of this consignment are fully and accurately described above by the proper shipping name, and are classified, packaged, marked and labeled/placarded, and are in all respects in proper condition for transport according to applicable international and national governmental regulations. If export shipment and I am the Primary Exporter, I certify that the contents of this consignment conform to the terms of the attached EPA Acknowledgment of Consent.
I certify that the waste minimization statement identified in 40 CFR 262.27(a) (if I am a large quantity generator) or (b) (if I am a small quantity generator) is true.

Generator's/Offeror's Printed/Typed Name: DONN WILLIAMS

Signature: D W Williams

Month: 9 Day: 2 Year: 15

INT'L

16. International Shipments ☐ Import to U.S. ☐ Export from U.S. Port of entry/exit:

Transporter signature (for exports only): Date leaving U.S.:

TRANSPORTER

17. Transporter Acknowledgment of Receipt of Materials

Transporter 1 Printed/Typed Name: Randy Gunter

Signature: Randy Gunter

Month: 9 Day: 2 Year: 15

Transporter 2 Printed/Typed Name:

Signature:

Month: Day: Year:

DESIGNATED FACILITY

18. Discrepancy

18a. Discrepancy Indication Space ☐ Quantity ☐ Type ☐ Residue ☐ Partial Rejection ☐ Full Rejection

Manifest Reference Number:

18b. Alternate Facility (or Generator)

U.S. EPA ID Number:

Facility's Phone:

18c. Signature of Alternate Facility (or Generator)

Month: Day: Year:

19. Hazardous Waste Report Management Method Codes (i.e., codes for hazardous waste treatment, disposal, and recycling systems)

1. 2. 3. 4.

20. Designated Facility Owner or Operator: Certification of receipt of hazardous materials covered by the manifest except as noted in Item 18a

Printed/Typed Name: Signature: Month: Day: Year:

EPA Form 8700-22 (Rev. 3-05) Previous editions are obsolete.

GENERATOR'S INITIAL COPY

CWMI

Box 2: 4

Please print or type. (Form designed for use on elite (12-pitch) typewriter.)

Form Approved. OMB No. 2050-0039

UNIFORM HAZARDOUS WASTE MANIFEST	1. Generator ID Number	2. Page 1 of	3. Emergency Response Phone	4. Manifest Tracking Number
	EXEMPT	1		002734185 GBF

GENERATOR

5. Generator's Name and Mailing Address
SOLUTIA, INC - ANNISTON PCB SITE
702 CLYDESDALE AVE
ANNISTON AL 36201
Generator's Phone: (601) 807-1157

Generator's Site Address (if different than mailing address)

6. Transporter 1 Company Name
Rogers Waste Mgt.

U.S. EPA ID Number
MSD013557

7. Transporter 2 Company Name

U.S. EPA ID Number

8. Designated Facility Name and Site Address
CHEMICAL WASTE MANAGEMENT, INC.
HIGHWAY 17 NORTH, MILE MARKER 163
EMELLE AL 35459
Facility's Phone: (205)652-9721

U.S. EPA ID Number
ALD000622464

9a. HM	9b. U.S. DOT Description (including Proper Shipping Name, Hazard Class, ID Number, and Packing Group (if any))	10. Containers No.	10. Containers Type	11. Total Quantity	12. Unit Wt./Vol.	13. Waste Codes
X	1. UN3432,RQ,POLYCHLORINATED BIPHENYLS,SOLID,9,III CM9879	001	DT	18000	K	
	2.					
	3.					
	4.					

14. Special Handling Instructions and Additional Information
1. CM9879 ERG-171
PO#: 4255786 OSD: 6/24/15
ERI PROVIDER: CHEMTREC (CONTRACT CCN24117)

15. **GENERATOR'S/OFFEROR'S CERTIFICATION:** I hereby declare that the contents of this consignment are fully and accurately described above by the proper shipping name, and are classified, packaged, marked and labeled/placarded, and are in all respects in proper condition for transport according to applicable international and national governmental regulations. If export shipment and I am the Primary Exporter, I certify that the contents of this consignment conform to the terms of the attached EPA Acknowledgment of Consent. I certify that the waste minimization statement identified in 40 CFR 262.27(a) (if I am a large quantity generator) or (b) (if I am a small quantity generator) is true.

Generator's/Offeror's Printed/Typed Name: DOHN WILLIAMS
Signature
Month: 6 Day: 24 Year: 15

INT'L

16. International Shipments ☐ Import to U.S. ☐ Export from U.S. Port of entry/exit:
Transporter signature (for exports only): Date leaving U.S.:

TRANSPORTER

17. Transporter Acknowledgment of Receipt of Materials

Transporter 1 Printed/Typed Name: Tony Charles Wilson Sr.
Signature
Month: 6 Day: 24 Year: 15

Transporter 2 Printed/Typed Name
Signature
Month: Day: Year:

DESIGNATED FACILITY

18. Discrepancy

18a. Discrepancy Indication Space ☐ Quantity ☐ Type ☐ Residue ☐ Partial Rejection ☐ Full Rejection

Manifest Reference Number:
U.S. EPA ID Number

18b. Alternate Facility (or Generator)

Facility's Phone:
Month: Day: Year:

18c. Signature of Alternate Facility (or Generator)

19. Hazardous Waste Report Management Method Codes (i.e., codes for hazardous waste treatment, disposal, and recycling systems)

1.	2.	3.	4.

20. Designated Facility Owner or Operator: Certification of receipt of hazardous materials covered by the manifest except as noted in Item 18a

Printed/Typed Name
Signature
Month: Day: Year:

EPA Form 8700-22 (Rev. 3-05) Previous editions are obsolete.

GENERATOR'S INITIAL COPY

WM
Chemical Waste Managment
P.O. Box 55
36964 Alabama Hwy 17
Emelle, AL 35459-0055
(205)652-9721

Manifest Document Number:

SOLUTIA INC
702 CLYDESDALE AVE

ANNISTON, AL 36201-5328

Attn: DONN WILLIAMS

Site Information

SOLUTIA
702 CLYDESDALE AVE

ANNISTON, AL 36201-5328

CERTIFICATE OF DISPOSAL

Chemical Waste Management, Inc. (ALD000622464) has received PCB material from
SOLUTIA

as described on Hazardous Waste Manifest Number 002734186GBF-1
Waste Management, Inc. hereby certifies that the above described material (excluding PCB liquids, if applicable) was landfilled on the dates shown below, in compliance with State and Federal Regulations.

Under civil and criminal penalties of law for the making or submission of false or fraudulent statements or representation (18 U.S.C. 1001 and 15 U.S.C. 2615), I certify that the information contained in or accompanying this document is true, accurate and complete. As to the identified section(s) of this document for which I cannot personally verify truth and accuracy, I certify as the company official having supervisory responsibility for the persons who, acting under my direct instructions, made the verification that this information is true, accurate and complete.

Al Talbott / cm

Al Talbott, Safety Manager
August 29, 2015

OSD	Unique ID	Cont #	Profile	Disposed	Description
8/21/15	002734186GBF-01	1	CM9879	8/26/15	ANNISTON PCB SITE CONSENT DECR

BOX 6012

CWMI

Please print or type. (Form designed for use on elite (12-pitch) typewriter.)

Form Approved. OMB No. 2050-0039

UNIFORM HAZARDOUS WASTE MANIFEST

1. Generator ID Number: EXEMPT
2. Page 1 of 1
3. Emergency Response Phone: 770-335-4689
4. Manifest Tracking Number: 002734186 GBF

5. Generator's Name and Mailing Address
SOLUTIA, INC - ANNISTON PCB SITE
702 CLYDESDALE AVE
ANNISTON AL 36201
Generator's Phone: (601)607-1187

Generator's Site Address (if different than mailing address)

6. Transporter 1 Company Name: Robbie D. Wood
U.S. EPA ID Number: ALD067138897

7. Transporter 2 Company Name
U.S. EPA ID Number

8. Designated Facility Name and Site Address
CHEMICAL WASTE MANAGEMENT, INC.
HIGHWAY 17 NORTH, MILE MARKER 163
EMELLE AL 35459
Facility's Phone: (205)652-9721
U.S. EPA ID Number: ALD000622464

9a. HM	9b. U.S. DOT Description (including Proper Shipping Name, Hazard Class, ID Number, and Packing Group (if any))	10. Containers No.	10. Containers Type	11. Total Quantity	12. Unit Wt./Vol.	13. Waste Codes
X	1. UN3432,RQ,POLYCHLORINATED BIPHENYLS,SOLID,9,III CM9879	001	~~DF~~ CM	12,312 ~~18000~~	K	
	2.			JB 8/21/15		
	3.					
	4.					

14. Special Handling Instructions and Additional Information
1. CM9879 ERG-171 PO#: 42557866 OSD: 8/21/15
ERI PROVIDER: CHEMTREC (CONTRACT CCN24117) Auto Clave

15. **GENERATOR'S/OFFEROR'S CERTIFICATION:** I hereby declare that the contents of this consignment are fully and accurately described above by the proper shipping name, and are classified, packaged, marked and labeled/placarded, and are in all respects in proper condition for transport according to applicable international and national governmental regulations. If export shipment and I am the Primary Exporter, I certify that the contents of this consignment conform to the terms of the attached EPA Acknowledgment of Consent.
I certify that the waste minimization statement identified in 40 CFR 262.27(a) (if I am a large quantity generator) or (b) (if I am a small quantity generator) is true.

Generator's/Offeror's Printed/Typed Name: DONN WILLIAMS
Signature: [signature]
Month 8 Day 21 Year 15

16. International Shipments ☐ Import to U.S. ☐ Export from U.S. Port of entry/exit:
Transporter signature (for exports only): Date leaving U.S.:

17. Transporter Acknowledgment of Receipt of Materials
Transporter 1 Printed/Typed Name: Kent Newton
Signature: [signature]
Month 8 Day 21 Year 15
Transporter 2 Printed/Typed Name
Signature
Month Day Year

18. Discrepancy
18a. Discrepancy Indication Space ☒ Quantity ☐ Type ☐ Residue ☐ Partial Rejection ☐ Full Rejection
Corrected to record not per Donn Williams JB 8/21/15
Manifest Reference Number:

18b. Alternate Facility (or Generator)
U.S. EPA ID Number
Facility's Phone:

18c. Signature of Alternate Facility (or Generator)
Month Day Year

19. Hazardous Waste Report Management Method Codes (i.e., codes for hazardous waste treatment, disposal, and recycling systems)
1. M132 2. 3. 4.

20. Designated Facility Owner or Operator: Certification of receipt of hazardous materials covered by the manifest except as noted in Item 18a
Printed/Typed Name: Mal Alexander
Signature: Mal Alexander
Month 8 Day 26 Year 15

GENERATOR / INT'L / TRANSPORTER / DESIGNATED FACILITY

EPA Form 8700-22 (Rev. 3-05) Previous editions are obsolete.

DESIGNATED FACILITY TO GENERATOR

PRIORITY PRINTING - MERIDIAN, MISSISSIPPI 23933

WASTE MANAGEMENT

Waste Management
Emelle Facility
WEIGHED ON CARDINAL SCALES

436743

GROSS 68020 lb
09:27AM 08/26/2015

GROSS 40700 lb
10:40AM 08/26/2015

27320 GROSS
12392 TARE
NET

Customer: Solutia

Transporter: ROW

Truck #: 205 Trailer #: 6012

Receipt #: 508116 Manifest #: 002734186 GBF

DIGITAL WEIGHT INDICATOR & PRINTER
WEIGHED BY MA

FORM 510

Chemical Waste Management
P.O. Box 55
36964 Alabama Hwy 17
Emelle, AL 35459-0055
(205)652-9721

SOLUTIA INC
702 CLYDESDALE AVE

ANNISTON,AL 36201-5328

Attn: DONN WILLIAMS

Site Infomation

SOLUTIA
702 CLYDESDALE AVE

ANNISTON,AL 36201-5328

ACKNOWLEDGEMENT OF RECEIPT OF WASTE SHIPMENT

Generator Name: SOLUTIA
Enclosed is/are your Generator Number Two copy / copies for Alabama Manifest Numbers:

002734186GBF

This copy is to acknowledge that Chemical Waste Management, Inc., of Emelle, Alabama has received your shipment. As a requirement of 40 CFR 264.12 (b), this letter serves to inform you that this facility has the proper permits and will accept your shipment upon completion of waste analysis procedures specified in the facility's Waste Analysis Plan and as determined in the approval waste profile submitted for this/these wastes.

As of September 26, 1997, Chemical Waste Management, Inc., Emelle Alabama (ALD000622464) is operating under a AHWMMA Permit, issued by the Alabama Department of Environmental Management. (RCRA)

Al Talbott
Safety Manager

August 29, 2015

CWMI

Please print or type. (Form designed for use on elite (12-pitch) typewriter.)

Form Approved. OMB No. 2050-0039

UNIFORM HAZARDOUS WASTE MANIFEST

1. Generator ID Number: EXEMPT
2. Page 1 of 1
3. Emergency Response Phone:
4. Manifest Tracking Number: 002734186 GBF

5. Generator's Name and Mailing Address
SOLUTIA, INC - ANNISTON PCB SITE
702 CLYDESDALE AVE
ANNISTON AL 36201
Generator's Phone: (601)807-1187

Generator's Site Address (if different than mailing address):

6. Transporter 1 Company Name: Robbie D. Wood
U.S. EPA ID Number: ALD067138891

7. Transporter 2 Company Name:
U.S. EPA ID Number:

8. Designated Facility Name and Site Address
CHEMICAL WASTE MANAGEMENT, INC.
HIGHWAY 17 NORTH, MILE MARKER 163
EMELLE AL 35459
Facility's Phone: (205)652-9721
U.S. EPA ID Number: ALD000622464

9a. HM	9b. U.S. DOT Description (including Proper Shipping Name, Hazard Class, ID Number, and Packing Group (if any))	10. Containers No.	10. Containers Type	11. Total Quantity	12. Unit Wt./Vol.	13. Waste Codes
X	1. UN3432,RQ,POLYCHLORINATED BIPHENYLS,SOLID,9,III CM9879	001	DT	18000	K	
	2.					
	3.					
	4.					

14. Special Handling Instructions and Additional Information
1. CM9879 ERG-171 PO#: 42557866 OSD: 8/21/15
ERI PROVIDER: CHEMTREC (CONTRACT CCN24117) Auto Clave

15. **GENERATOR'S/OFFEROR'S CERTIFICATION:** I hereby declare that the contents of this consignment are fully and accurately described above by the proper shipping name, and are classified, packaged, marked and labeled/placarded, and are in all respects in proper condition for transport according to applicable international and national governmental regulations. If export shipment and I am the Primary Exporter, I certify that the contents of this consignment conform to the terms of the attached EPA Acknowledgment of Consent.
I certify that the waste minimization statement identified in 40 CFR 262.27(a) (if I am a large quantity generator) or (b) (if I am a small quantity generator) is true.

Generator's/Offeror's Printed/Typed Name: DONN WILLIAMS
Signature: [signature]
Month: 8 Day: 21 Year: 15

16. International Shipments ☐ Import to U.S. ☐ Export from U.S. Port of entry/exit:
Transporter signature (for exports only): Date leaving U.S.:

17. Transporter Acknowledgment of Receipt of Materials
Transporter 1 Printed/Typed Name: Kent Newton
Signature: [signature]
Month: 8 Day: 21 Year: 15
Transporter 2 Printed/Typed Name:
Signature:
Month: Day: Year:

18. Discrepancy
18a. Discrepancy Indication Space ☐ Quantity ☐ Type ☐ Residue ☐ Partial Rejection ☐ Full Rejection
Manifest Reference Number:

18b. Alternate Facility (or Generator)
U.S. EPA ID Number:
Facility's Phone:

18c. Signature of Alternate Facility (or Generator)
Month: Day: Year:

19. Hazardous Waste Report Management Method Codes (i.e., codes for hazardous waste treatment, disposal, and recycling systems)
1. 2. 3. 4.

20. Designated Facility Owner or Operator: Certification of receipt of hazardous materials covered by the manifest except as noted in Item 18a
Printed/Typed Name:
Signature:
Month: Day: Year:

GENERATOR / INT'L / TRANSPORTER / DESIGNATED FACILITY

EPA Form 8700-22 (Rev. 3-05) Previous editions are obsolete.

GENERATOR'S INITIAL COPY

WM
Chemical Waste Managment
P.O. Box 55
36964 Alabama Hwy 17
Emelle, AL 35459-0055
(205)652-9721

Manifest Document Number:

SOLUTIA INC
702 CLYDESDALE AVE

ANNISTON, AL 36201-5328

Attn: DONN WILLIAMS

Site Information

SOLUTIA
702 CLYDESDALE AVE

ANNISTON, AL 36201-5328

CERTIFICATE OF DISPOSAL

Chemical Waste Management, Inc. (ALD000622464) has received PCB material from
SOLUTIA

as described on Hazardous Waste Manifest Number 002734187GBF-1
Waste Management, Inc. hereby certifies that the above described material (excluding PCB liquids, if applicable) was landfilled on the dates shown below, in compliance with State and Federal Regulations.

Under civil and criminal penalties of law for the making or submission of false or fraudulent statements or representation (18 U.S.C. 1001 and 15 U.S.C. 2615), I certify that the information contained in or accompanying this document is true, accurate and complete. As to the identified section(s) of this document for which I cannot personally verify truth and accuracy, I certify as the company official having supervisory responsibility for the persons who, acting under my direct instructions, made the verification that this information is true, accurate and complete.

Al Talbott / am

Al Talbott, Safety Manager
August 29, 2015

OSD	Unique ID	Cont #	Profile	Disposed	Description
8/21/15	002734187GBF-01	1	CM9879	8/25/15	ANNISTON PCB SITE CONSENT DECR

Box 1013

CWM

Please print or type. (Form designed for use on elite (12-pitch) typewriter.)

Form Approved. OMB No. 2050-0039

UNIFORM HAZARDOUS WASTE MANIFEST

1. Generator ID Number	2. Page 1 of	3. Emergency Response Phone	4. Manifest Tracking Number
EXEMPT	1		002734187 GBF

GENERATOR

5. Generator's Name and Mailing Address

SOLUTIA, INC - ANNISTON PCB SITE
702 CLYDESDALE AVE
ANNISTON AL 36201
Generator's Phone: (256)237-1167

Generator's Site Address (if different than mailing address)

6. Transporter 1 Company Name: Rabbit D. Wood Inc — U.S. EPA ID Number: ALD067133891

7. Transporter 2 Company Name — U.S. EPA ID Number

8. Designated Facility Name and Site Address

CHEMICAL WASTE MANAGEMENT, INC.
HIGHWAY 17 NORTH, MILE MARKER 163
EMELLE AL 35459
Facility's Phone: (205)652-9721

U.S. EPA ID Number: ALD000622464

9a. HM	9b. U.S. DOT Description (including Proper Shipping Name, Hazard Class, ID Number, and Packing Group (if any))	10. Containers No.	10. Containers Type	11. Total Quantity	12. Unit Wt./Vol.	13. Waste Codes
X	1. UN3432,RQ,POLYCHLORINATED BIPHENYLS,SOLID,9,III CM9879	001	DT	18000	K	
	2.					
	3.					
	4.					

14. Special Handling Instructions and Additional Information

1. CM9879 ERG-171 POS: 42557866 OSD: 8/21/15

ERI PROVIDER: CHEMTREC (CONTRACT C[illegible]24117)

15. **GENERATOR'S/OFFEROR'S CERTIFICATION:** I hereby declare that the contents of this consignment are fully and accurately described above by the proper shipping name, and are classified, packaged, marked and labeled/placarded, and are in all respects in proper condition for transport according to applicable international and national governmental regulations. If export shipment and I am the Primary Exporter, I certify that the contents of this consignment conform to the terms of the attached EPA Acknowledgment of Consent.
I certify that the waste minimization statement identified in 40 CFR 262.27(a) (if I am a large quantity generator) or (b) (if I am a small quantity generator) is true.

Generator's/Offeror's Printed/Typed Name	Signature	Month	Day	Year
DONN WILLIAMS	D.W. Williams	8	21	15

INT'L

16. International Shipments ☐ Import to U.S. ☐ Export from U.S. Port of entry/exit:

Transporter signature (for exports only): Date leaving U.S.:

TRANSPORTER

17. Transporter Acknowledgment of Receipt of Materials

Transporter 1 Printed/Typed Name	Signature	Month	Day	Year
Ernest Winston	Ernest Winston	8	21	15
Transporter 2 Printed/Typed Name	Signature	Month	Day	Year

DESIGNATED FACILITY

18. Discrepancy

18a. Discrepancy Indication Space ☐ Quantity ☐ Type ☐ Residue ☐ Partial Rejection ☐ Full Rejection

Manifest Reference Number:

18b. Alternate Facility (or Generator) — U.S. EPA ID Number

Facility's Phone:

18c. Signature of Alternate Facility (or Generator) — Month Day Year

19. Hazardous Waste Report Management Method Codes (i.e., codes for hazardous waste treatment, disposal, and recycling systems)

1.	2.	3.	4.

20. Designated Facility Owner or Operator: Certification of receipt of hazardous materials covered by the manifest except as noted in Item 18a

Printed/Typed Name	Signature	Month	Day	Year

EPA Form 8700-22 (Rev. 3-05) Previous editions are obsolete.

GENERATOR'S INITIAL COPY

CWM

Please print or type. (Form designed for use on elite (12-pitch) typewriter.) Rev 10/13

Form Approved. OMB No. 2050-0039

UNIFORM HAZARDOUS WASTE MANIFEST

1. Generator ID Number	2. Page 1 of	3. Emergency Response Phone	4. Manifest Tracking Number
EXEMPT	1		002734187 GBF

GENERATOR

5. Generator's Name and Mailing Address
SOLUTIA, INC - ANNISTON PCB SITE
702 CLYDESDALE AVE
ANNISTON AL 36201
Generator's Phone: (601)937-1187

Generator's Site Address (if different than mailing address)

6. Transporter 1 Company Name
Robbie D. Wood Inc

U.S. EPA ID Number
ALD067138841

7. Transporter 2 Company Name

U.S. EPA ID Number

8. Designated Facility Name and Site Address
CHEMICAL WASTE MANAGEMENT, INC.
HIGHWAY 17 NORTH, MILE MARKER 163
EMELLE AL 35459

U.S. EPA ID Number
ALD000622464

Facility's Phone: (205)652-9721

9a. HM	9b. U.S. DOT Description (including Proper Shipping Name, Hazard Class, ID Number, and Packing Group (if any))	10. Containers No.	10. Containers Type	11. Total Quantity	12. Unit Wt./Vol.	13. Waste Codes
X	1. UN3432,RQ,POLYCHLORINATED BIPHENYLS,SOLID,9,III CM9879	001	BT CM	10000 14045 16 8/25/15	K	
	2.					
	3.					
	4.					

14. Special Handling Instructions and Additional Information
1. CM9879 ERG-171 PO#: 4255786 OSD: 8/31/15
ERI PROVIDER: CHEMTREC (CONTRACT CCN24117) Ash Dave

15. **GENERATOR'S/OFFEROR'S CERTIFICATION:** I hereby declare that the contents of this consignment are fully and accurately described above by the proper shipping name, and are classified, packaged, marked and labeled/placarded, and are in all respects in proper condition for transport according to applicable international and national governmental regulations. If export shipment and I am the Primary Exporter, I certify that the contents of this consignment conform to the terms of the attached EPA Acknowledgment of Consent.
I certify that the waste minimization statement identified in 40 CFR 262.27(a) (if I am a large quantity generator) or (b) (if I am a small quantity generator) is true.

Generator's/Offeror's Printed/Typed Name: DONN WILLIAMS
Signature: D.W. Williams
Month 8 Day 21 Year 15

INT'L

16. International Shipments ☐ Import to U.S. ☐ Export from U.S. Port of entry/exit:
Transporter signature (for exports only): Date leaving U.S.:

TRANSPORTER

17. Transporter Acknowledgment of Receipt of Materials
Transporter 1 Printed/Typed Name: Ernest Winston
Signature: Ernest Winston
Month 8 Day 21 Year 15
Transporter 2 Printed/Typed Name
Signature
Month Day Year

DESIGNATED FACILITY

18. Discrepancy
18a. Discrepancy Indication Space ☑ Quantity ☐ Type ☐ Residue ☐ Partial Rejection ☐ Full Rejection
Received based on per Donn Williams. 8/25/15
Manifest Reference Number:
18b. Alternate Facility (or Generator)
U.S. EPA ID Number
Facility's Phone:
18c. Signature of Alternate Facility (or Generator)
Month Day Year

19. Hazardous Waste Report Management Method Codes (i.e., codes for hazardous waste treatment, disposal, and recycling systems)
1. H132 2. 3. 4.

20. Designated Facility Owner or Operator: Certification of receipt of hazardous materials covered by the manifest except as noted in Item 18a
Printed/Typed Name: Mel Alexander
Signature: Mel Alexander
Month 8 Day 25 Year 15

EPA Form 8700-22 (Rev. 3-05) Previous editions are obsolete.

DESIGNATED FACILITY TO GENERATOR

23933

PRIORITY PRINTING - MERIDIAN, MISSISSIPPI

WASTE MANAGEMENT

Waste Management
Emelle Facility
WEIGHED ON CARDINAL SCALES

436700

GROSS 65880 lb
08:46AM 08/25/2015

GROSS 34920 lb
01:38PM 08/25/2015

GROSS	
TARE	
NET	30960

Customer: Solutia

Transporter: ADR

14643 K

Truck #: 204 Trailer #: 1013

Receipt #: 508084 Manifest #: 00273418 7GBF

DIGITAL WEIGHT INDICATOR & PRINTER

WEIGHED BY MA

FORM 510

Chemical Waste Management
P.O. Box 55
36964 Alabama Hwy 17
Emelle, AL 35459-0055
(205)652-9721

SOLUTIA INC
702 CLYDESDALE AVE

ANNISTON,AL 36201-5328

Attn: DONN WILLIAMS

Site Infomation

SOLUTIA
702 CLYDESDALE AVE

ANNISTON,AL 36201-5328

ACKNOWLEDGEMENT OF RECEIPT OF WASTE SHIPMENT

Generator Name: SOLUTIA
Enclosed is/are your Generator Number Two copy / copies for Alabama Manifest Numbers:

002734187GBF

This copy is to acknowledge that Chemical Waste Management, Inc., of Emelle, Alabama has received your shipment. As a requirement of 40 CFR 264.12 (b), this letter serves to inform you that this facility has the proper permits and will accept your shipment upon completion of waste analysis procedures specified in the facility's Waste Analysis Plan and as determined in the approval waste profile submitted for this/these wastes.

As of September 26, 1997, Chemical Waste Management, Inc., Emelle Alabama (ALD000622464) is operating under a AHWMMA Permit, issued by the Alabama Department of Environmental Management. (RCRA)

Al Talbott
Safety Manager

August 29, 2015

Box 6048 Box 6048 CWMI

Please print or type. (Form designed for use on elite (12-pitch) typewriter.) Form Approved. OMB No. 2050-0039

UNIFORM HAZARDOUS WASTE MANIFEST

1. Generator ID Number: EXEMPT
2. Page 1 of: 1
3. Emergency Response Phone:
4. Manifest Tracking Number: 002734188 GBF

GENERATOR

5. Generator's Name and Mailing Address
SOLUTIA, INC - ANNISTON PCB SITE
702 CLYDESDALE AVE
ANNISTON AL 36201
Generator's Phone: (601) 937-1187

Generator's Site Address (if different than mailing address)

6. Transporter 1 Company Name — U.S. EPA ID Number

7. Transporter 2 Company Name — U.S. EPA ID Number

8. Designated Facility Name and Site Address — U.S. EPA ID Number
CHEMICAL WASTE MANAGEMENT, INC.
HIGHWAY 17 NORTH, MILE MARKER 163
EMELLE AL 35459
Facility's Phone: (205)652-9721
ALD000622464

9a. HM	9b. U.S. DOT Description (including Proper Shipping Name, Hazard Class, ID Number, and Packing Group (if any))	10. Containers No.	10. Containers Type	11. Total Quantity	12. Unit Wt./Vol.	13. Waste Codes
X	1. UN3432,RQ,POLYCHLORINATED BIPHENYLS,SOLID,9,III CM9879	001	DT	18000	K	
	2.					
	3.					
	4.					

14. Special Handling Instructions and Additional Information
1. CM9879 ERG-171 PO#: 4255786 QSD: Charlie Archibald
ERI PROVIDER: CHEMTREC (CONTRACT CCN24117)

15. **GENERATOR'S/OFFEROR'S CERTIFICATION:** I hereby declare that the contents of this consignment are fully and accurately described above by the proper shipping name, and are classified, packaged, marked and labeled/placarded, and are in all respects in proper condition for transport according to applicable international and national governmental regulations. If export shipment and I am the Primary Exporter, I certify that the contents of this consignment conform to the terms of the attached EPA Acknowledgment of Consent.
I certify that the waste minimization statement identified in 40 CFR 262.27(a) (if I am a large quantity generator) or (b) (if I am a small quantity generator) is true.

Generator's/Offeror's Printed/Typed Name: DONN WILLIAMS — Signature: D Williams — Month: 8 Day: 24 Year: 15

INT'L

16. International Shipments ☐ Import to U.S. ☐ Export from U.S. Port of entry/exit:
Transporter signature (for exports only): Date leaving U.S.:

TRANSPORTER

17. Transporter Acknowledgment of Receipt of Materials

Transporter 1 Printed/Typed Name: Clarence C Holt — Signature: [signature] — Month: 08 Day: 24 Year: 15

Transporter 2 Printed/Typed Name — Signature — Month Day Year

DESIGNATED FACILITY

18. Discrepancy

18a. Discrepancy Indication Space ☐ Quantity ☐ Type ☐ Residue ☐ Partial Rejection ☐ Full Rejection

Manifest Reference Number:

18b. Alternate Facility (or Generator) — U.S. EPA ID Number

Facility's Phone:

18c. Signature of Alternate Facility (or Generator) — Month Day Year

19. Hazardous Waste Report Management Method Codes (i.e., codes for hazardous waste treatment, disposal, and recycling systems)

1.	2.	3.	4.

20. Designated Facility Owner or Operator: Certification of receipt of hazardous materials covered by the manifest except as noted in Item 18a

Printed/Typed Name — Signature — Month Day Year

EPA Form 8700-22 (Rev. 3-05) Previous editions are obsolete.

GENERATOR'S INITIAL COPY

Box 3505

CWMI

Please print or type. (Form designed for use on elite (12-pitch) typewriter.)

Form Approved. OMB No. 2050-0039

UNIFORM HAZARDOUS WASTE MANIFEST	1. Generator ID Number	2. Page 1 of	3. Emergency Response Phone	4. Manifest Tracking Number
	EXEMPT	1		002734189 GBF

GENERATOR

5. Generator's Name and Mailing Address

SOLUTIA, INC - ANNISTON PCB SITE
702 CLYDESDALE AVE
ANNISTON AL 36201

Generator's Phone: (256) 307-1187

Generator's Site Address (if different than mailing address)

6. Transporter 1 Company Name — U.S. EPA ID Number

7. Transporter 2 Company Name — U.S. EPA ID Number

8. Designated Facility Name and Site Address — U.S. EPA ID Number

CHEMICAL WASTE MANAGEMENT, INC.
HIGHWAY 17 NORTH, MILE MARKER 163
EMELLE AL 35459

ALD000622464

Facility's Phone: (205)652-9721

9a. HM	9b. U.S. DOT Description (including Proper Shipping Name, Hazard Class, ID Number, and Packing Group (if any))	10. Containers No.	10. Containers Type	11. Total Quantity	12. Unit Wt./Vol.	13. Waste Codes
X	1. UN3432,RQ,POLYCHLORINATED BIPHENYLS,SOLID,9,III CM9879	001	DT	16000	K	
	2.					
	3.					
	4.					

14. Special Handling Instructions and Additional Information

1. CM9879 ERG-171 POW: 4265T866 OSD: 8/24/15

ERI PROVIDER: CHEMTREC (CONTRACT CCN24117)

15. **GENERATOR'S/OFFEROR'S CERTIFICATION:** I hereby declare that the contents of this consignment are fully and accurately described above by the proper shipping name, and are classified, packaged, marked and labeled/placarded, and are in all respects in proper condition for transport according to applicable international and national governmental regulations. If export shipment and I am the Primary Exporter, I certify that the contents of this consignment conform to the terms of the attached EPA Acknowledgment of Consent.
I certify that the waste minimization statement identified in 40 CFR 262.27(a) (if I am a large quantity generator) or (b) (if I am a small quantity generator) is true.

Generator's/Offeror's Printed/Typed Name: DONN WILLIAMS — Signature — Month: 8 — Day: 24 — Year: 15

INT'L

16. International Shipments ☐ Import to U.S. ☐ Export from U.S. Port of entry/exit:

Transporter signature (for exports only): Date leaving U.S.:

TRANSPORTER

17. Transporter Acknowledgment of Receipt of Materials

Transporter 1 Printed/Typed Name — Signature — Month — Day — Year

Transporter 2 Printed/Typed Name — Signature — Month — Day — Year

DESIGNATED FACILITY

18. Discrepancy

18a. Discrepancy Indication Space ☐ Quantity ☐ Type ☐ Residue ☐ Partial Rejection ☐ Full Rejection

Manifest Reference Number:

18b. Alternate Facility (or Generator) — U.S. EPA ID Number

Facility's Phone:

18c. Signature of Alternate Facility (or Generator) — Month — Day — Year

19. Hazardous Waste Report Management Method Codes (i.e., codes for hazardous waste treatment, disposal, and recycling systems)

1.	2.	3.	4.

20. Designated Facility Owner or Operator: Certification of receipt of hazardous materials covered by the manifest except as noted in Item 18a

Printed/Typed Name — Signature — Month — Day — Year

EPA Form 8700-22 (Rev. 3-05) Previous editions are obsolete.

GENERATOR'S INITIAL COPY

WM
Chemical Waste Managment
P.O. Box 55
36964 Alabama Hwy 17
Emelle, AL 35459-0055
(205)652-9721

Manifest Document Number:

SOLUTIA INC
702 CLYDESDALE AVE

ANNISTON, AL 36201-5328

Attn: DONN WILLIAMS

Site Information

SOLUTIA
702 CLYDESDALE AVE

ANNISTON, AL 36201-5328

CERTIFICATE OF DISPOSAL

Chemical Waste Management, Inc. (ALD000622464) has received PCB material from
SOLUTIA

as described on Hazardous Waste Manifest Number 002734191GBF-1
Waste Management, Inc. hereby certifies that the above described material (excluding PCB liquids, if applicable) was landfilled on the dates shown below, in compliance with State and Federal Regulations.

Under civil and criminal penalties of law for the making or submission of false or fraudulent statements or representation (18 U.S.C. 1001 and 15 U.S.C. 2615), I certify that the information contained in or accompanying this document is true, accurate and complete. As to the identified section(s) of this document for which I cannot personally verify truth and accuracy, I certify as the company official having supervisory responsibility for the persons who, acting under my direct instructions, made the verification that this information is true, accurate and complete.

Al Talbott/am

Al Talbott, Safety Manager
September 03, 2015

OSD	Unique ID	Cont #	Profile	Disposed	Description
8/24/15	002734191GBF-01	1	CM9879	9/1/15	ANNISTON PCB SITE CONSENT DECR

Box 441

CWMI

Please print or type. (Form designed for use on elite (12-pitch) typewriter.)

Form Approved. OMB No. 2050-0039

UNIFORM HAZARDOUS WASTE MANIFEST

1. Generator ID Number: EXEMPT
2. Page 1 of 1
3. Emergency Response Phone: 770 337-4689
4. Manifest Tracking Number: 002734191 GBF

5. Generator's Name and Mailing Address
SOLUTIA, INC - ANNISTON PCB SITE
702 CLYDESDALE AVE
ANNISTON AL 36201
Generator's Phone: (001)807-4187

Generator's Site Address (if different than mailing address)

6. Transporter 1 Company Name: RDV
U.S. EPA ID Number: ALD067138891

7. Transporter 2 Company Name:
U.S. EPA ID Number:

8. Designated Facility Name and Site Address
CHEMICAL WASTE MANAGEMENT, INC.
HIGHWAY 17 NORTH, MILE MARKER 163
EMELLE AL 35459
Facility's Phone: (205)652-9721
U.S. EPA ID Number: ALD000622464

9a. HM	9b. U.S. DOT Description (including Proper Shipping Name, Hazard Class, ID Number, and Packing Group (if any))	10. Containers No.	10. Containers Type	11. Total Quantity	12. Unit Wt./Vol.	13. Waste Codes
X	1. UN3432,RQ,POLYCHLORINATED BIPHENYLS,SOLID,9,III CM9879	001	~~01~~ CM	15821 ~~18000~~ 06/3/15	K	
	2.					
	3.					
	4.					

14. Special Handling Instructions and Additional Information
1. CM9879 ERG-171 PO#: 42557866 OSD: 8/24/15
ERI PROVIDER: CHEMTREC (CONTRACT CCN24117) Aiello Clark

15. **GENERATOR'S/OFFEROR'S CERTIFICATION:** I hereby declare that the contents of this consignment are fully and accurately described above by the proper shipping name, and are classified, packaged, marked and labeled/placarded, and are in all respects in proper condition for transport according to applicable international and national governmental regulations. If export shipment and I am the Primary Exporter, I certify that the contents of this consignment conform to the terms of the attached EPA Acknowledgment of Consent.
I certify that the waste minimization statement identified in 40 CFR 262.27(a) (if I am a large quantity generator) or (b) (if I am a small quantity generator) is true.

Generator's/Offeror's Printed/Typed Name: DONN WILLIAMS
Signature: [signature]
Month 6 Day 24 Year 15

16. International Shipments ☐ Import to U.S. ☐ Export from U.S. Port of entry/exit:
Transporter signature (for exports only): Date leaving U.S.:

17. Transporter Acknowledgment of Receipt of Materials
Transporter 1 Printed/Typed Name: [signature]
Signature: [signature]
Month 06 Day 24 Year 15
Transporter 2 Printed/Typed Name:
Signature:
Month Day Year

18. Discrepancy
18a. Discrepancy Indication Space ☒ Quantity ☐ Type ☐ Residue ☐ Partial Rejection ☐ Full Rejection
Corrected to reveal tag set per Donn Williams 28 9/3/15 Manifest Reference Number:

18b. Alternate Facility (or Generator)
U.S. EPA ID Number:
Facility's Phone:

18c. Signature of Alternate Facility (or Generator)
Month Day Year

19. Hazardous Waste Report Management Method Codes (i.e., codes for hazardous waste treatment, disposal, and recycling systems)
1. H132 2. 3. 4.

20. Designated Facility Owner or Operator: Certification of receipt of hazardous materials covered by the manifest except as noted in Item 18a
Printed/Typed Name: Mal Alexander
Signature: [signature]
Month 9 Day 1 Year 15

GENERATOR / INT'L / TRANSPORTER / DESIGNATED FACILITY

EPA Form 8700-22 (Rev. 3-05) Previous editions are obsolete.

DESIGNATED FACILITY TO GENERATOR

23933

PRIORITY PRINTING - MERIDIAN, MISSISSIPPI

WASTE MANAGEMENT

Waste Management
Emelle Facility
WEIGHED ON CARDINAL SCALES

436891

GROSS 70340 lb
07:57AM 09/01/2015
GROSS 35460 lb GROSS
02:04PM 09/01/2015 TARE
34880 NET

Customer: Solutia

Transporter: RDW 158211

Truck #: 204 Trailer #: 441

Receipt #: 508225 Manifest #: 00273491 GBF

DIGITAL WEIGHT INDICATOR & PRINTER
WEIGHED BY MA

FORM 510

Chemical Waste Management
P.O. Box 55
36964 Alabama Hwy 17
Emelle, AL 35459-0055
(205)652-9721

SOLUTIA INC
702 CLYDESDALE AVE

ANNISTON,AL 36201-5328

Attn: DONN WILLIAMS

Site Infomation

SOLUTIA
702 CLYDESDALE AVE

ANNISTON,AL 36201-5328

ACKNOWLEDGEMENT OF RECEIPT OF WASTE SHIPMENT

Generator Name: SOLUTIA
Enclosed is/are your Generator Number Two copy / copies for Alabama Manifest Numbers:

002734191GBF

This copy is to acknowledge that Chemical Waste Management, Inc., of Emelle, Alabama has received your shipment. As a requirement of 40 CFR 264.12 (b), this letter serves to inform you that this facility has the proper permits and will accept your shipment upon completion of waste analysis procedures specified in the facility's Waste Analysis Plan and as determined in the approval waste profile submitted for this/these wastes.

As of September 26, 1997, Chemical Waste Management, Inc., Emelle Alabama (ALD000622464) is operating under a AHWMMA Permit, issued by the Alabama Department of Environmental Management. (RCRA)

Al Talbott
Safety Manager

September 03, 2015

Rev 4/11 Oc 15

CWM

Please print or type. (Form designed for use on elite (12-pitch) typewriter.)

Form Approved. OMB No. 2050-0039

UNIFORM HAZARDOUS WASTE MANIFEST

1. Generator ID Number: EXEMPT

2. Page 1 of: 1

3. Emergency Response Phone: 770-339-4449

4. Manifest Tracking Number: 002734191 GBF

GENERATOR

5. Generator's Name and Mailing Address
SOLUTIA, INC - ANNISTON PCB SITE
702 CLYDESDALE AVE
ANNISTON AL 36201
Generator's Phone: (601)907-1187

Generator's Site Address (if different than mailing address)

6. Transporter 1 Company Name

U.S. EPA ID Number

7. Transporter 2 Company Name

U.S. EPA ID Number

8. Designated Facility Name and Site Address
CHEMICAL WASTE MANAGEMENT, INC.
HIGHWAY 17 NORTH, MILE MARKER 163
EMELLE AL 35459
Facility's Phone: (205)652-9721

U.S. EPA ID Number: ALD000622464

9a. HM	9b. U.S. DOT Description (including Proper Shipping Name, Hazard Class, ID Number, and Packing Group (if any))	10. Containers No.	10. Containers Type	11. Total Quantity	12. Unit Wt./Vol.	13. Waste Codes
X	1. UN3432,RQ,POLYCHLORINATED BIPHENYLS,SOLID,9,III CM9879	001	DT	18000	K	
	2.					
	3.					
	4.					

14. Special Handling Instructions and Additional Information
1. CM9879 ERG-171 PO#: 4235786 OSD: 8/24/15
ERI PROVIDER: CHEMTREC (CONTRACT CCN24117)

15. **GENERATOR'S/OFFEROR'S CERTIFICATION:** I hereby declare that the contents of this consignment are fully and accurately described above by the proper shipping name, and are classified, packaged, marked and labeled/placarded, and are in all respects in proper condition for transport according to applicable international and national governmental regulations. If export shipment and I am the Primary Exporter, I certify that the contents of this consignment conform to the terms of the attached EPA Acknowledgment of Consent.
I certify that the waste minimization statement identified in 40 CFR 262.27(a) (if I am a large quantity generator) or (b) (if I am a small quantity generator) is true.

Generator's/Offeror's Printed/Typed Name: DONN WILLIAMS
Signature
Month: 8 Day: 24 Year: 15

INT'L

16. International Shipments ☐ Import to U.S. ☐ Export from U.S. Port of entry/exit:
Transporter signature (for exports only): Date leaving U.S.:

TRANSPORTER

17. Transporter Acknowledgment of Receipt of Materials

Transporter 1 Printed/Typed Name
Signature
Month: 08 Day: 24 Year: 15

Transporter 2 Printed/Typed Name
Signature
Month: Day: Year:

DESIGNATED FACILITY

18. Discrepancy

18a. Discrepancy Indication Space ☐ Quantity ☐ Type ☐ Residue ☐ Partial Rejection ☐ Full Rejection

Manifest Reference Number:

18b. Alternate Facility (or Generator)
U.S. EPA ID Number
Facility's Phone:

18c. Signature of Alternate Facility (or Generator)
Month: Day: Year:

19. Hazardous Waste Report Management Method Codes (i.e., codes for hazardous waste treatment, disposal, and recycling systems)

1.	2.	3.	4.

20. Designated Facility Owner or Operator: Certification of receipt of hazardous materials covered by the manifest except as noted in Item 18a
Printed/Typed Name
Signature
Month: Day: Year:

EPA Form 8700-22 (Rev. 3-05) Previous editions are obsolete.

GENERATOR'S INITIAL COPY

Box 441

CWMI

Please print or type. (Form designed for use on elite (12-pitch) typewriter.) Form Approved. OMB No. 2050-0039

UNIFORM HAZARDOUS WASTE MANIFEST

1. Generator ID Number: EXEMPT
2. Page 1 of: 1
3. Emergency Response Phone: 770-337-4684
4. Manifest Tracking Number: 002734191 GBF

GENERATOR

5. Generator's Name and Mailing Address:
SOLUTIA, INC - ANNISTON PCB SITE
702 CLYDESDALE AVE
ANNISTON AL 36201
Generator's Phone: (601)807-1187

Generator's Site Address (if different than mailing address):

6. Transporter 1 Company Name: RDV
U.S. EPA ID Number: ALD067138891

7. Transporter 2 Company Name:
U.S. EPA ID Number:

8. Designated Facility Name and Site Address:
CHEMICAL WASTE MANAGEMENT, INC.
HIGHWAY 17 NORTH, MILE MARKER 163
EMELLE AL 35459
Facility's Phone: (205)652-9721
U.S. EPA ID Number: ALD000622464

9a. HM	9b. U.S. DOT Description (including Proper Shipping Name, Hazard Class, ID Number, and Packing Group (if any))	10. Containers No.	10. Containers Type	11. Total Quantity	12. Unit Wt./Vol.	13. Waste Codes
X	1. UN3432,RQ,POLYCHLORINATED BIPHENYLS,SOLID,9,III CM9879	001	DT CM	15821 ~~18000~~ JB 9/3/15	K	
	2.					
	3.					
	4.					

14. Special Handling Instructions and Additional Information
1. CM9879 ERG-171 PO#: 4255786 OSD: 8/24/15
ERI PROVIDER: CHEMTREC (CONTRACT CCN24117) Archive

15. **GENERATOR'S/OFFEROR'S CERTIFICATION:** I hereby declare that the contents of this consignment are fully and accurately described above by the proper shipping name, and are classified, packaged, marked and labeled/placarded, and are in all respects in proper condition for transport according to applicable international and national governmental regulations. If export shipment and I am the Primary Exporter, I certify that the contents of this consignment conform to the terms of the attached EPA Acknowledgment of Consent.
I certify that the waste minimization statement identified in 40 CFR 262.27(a) (if I am a large quantity generator) or (b) (if I am a small quantity generator) is true.

Generator's/Offeror's Printed/Typed Name: DONN WILLIAMS
Signature: D Williams
Month: 8 Day: 24 Year: 15

INT'L

16. International Shipments ☐ Import to U.S. ☐ Export from U.S. Port of entry/exit:
Transporter signature (for exports only): Date leaving U.S.:

TRANSPORTER

17. Transporter Acknowledgment of Receipt of Materials

Transporter 1 Printed/Typed Name: Shane Elkins
Signature: Shane Elkins
Month: 08 Day: 24 Year: 15

Transporter 2 Printed/Typed Name:
Signature:
Month: Day: Year:

DESIGNATED FACILITY

18. Discrepancy

18a. Discrepancy Indication Space ☒ Quantity ☐ Type ☐ Residue ☐ Partial Rejection ☐ Full Rejection

Corrected to recvd by wt per Donn Williams. JB 9/3/15 Manifest Reference Number:

18b. Alternate Facility (or Generator)
U.S. EPA ID Number:
Facility's Phone:

18c. Signature of Alternate Facility (or Generator)
Month: Day: Year:

19. Hazardous Waste Report Management Method Codes (i.e., codes for hazardous waste treatment, disposal, and recycling systems)

1.	2.	3.	4.
H132			

20. Designated Facility Owner or Operator: Certification of receipt of hazardous materials covered by the manifest except as noted in Item 18a

Printed/Typed Name: Mal Alexander
Signature: Mal Alexander
Month: 9 Day: 1 Year: 15

EPA Form 8700-22 (Rev. 3-05) Previous editions are obsolete.

DESIGNATED FACILITY TO GENERATOR

23933

PRIORITY PRINTING - MERIDIAN, MISSISSIPPI

WASTE MANAGEMENT

Waste Management
Emelle Facility
WEIGHED ON CARDINAL SCALES

436891

GROSS 70340 lb
07:57AM 09/01/2015
GROSS 35460 lb GROSS
02:04PM 09/01/2015 TARE
34880 NET

Customer: Solutia

15821 lb

Transporter: RDW

Truck #: 204 Trailer #: 441

Receipt #: 508225 Manifest #: 002734191 GBF

DIGITAL WEIGHT INDICATOR & PRINTER
WEIGHED BY MA

FORM 510

Chemical Waste Management
P.O. Box 55
36964 Alabama Hwy 17
Emelle, AL 35459-0055
(205)652-9721

SOLUTIA INC
702 CLYDESDALE AVE

ANNISTON,AL 36201-5328

Attn: DONN WILLIAMS

Site Infomation

SOLUTIA
702 CLYDESDALE AVE

ANNISTON,AL 36201-5328

ACKNOWLEDGEMENT OF RECEIPT OF WASTE SHIPMENT

Generator Name: SOLUTIA
Enclosed is/are your Generator Number Two copy / copies for Alabama Manifest Numbers:

002734191GBF

This copy is to acknowledge that Chemical Waste Management, Inc., of Emelle, Alabama has received your shipment. As a requirement of 40 CFR 264.12 (b), this letter serves to inform you that this facility has the proper permits and will accept your shipment upon completion of waste analysis procedures specified in the facility's Waste Analysis Plan and as determined in the approval waste profile submitted for this/these wastes.

As of September 26, 1997, Chemical Waste Management, Inc., Emelle Alabama (ALD000622464) is operating under a AHWMMA Permit, issued by the Alabama Department of Environmental Management. (RCRA)

Al Talbott
Safety Manager

September 03, 2015

WM
Chemical Waste Managment
P.O. Box 55
36964 Alabama Hwy 17
Emelle, AL 35459-0055
(205)652-9721

Manifest Document Number:

SOLUTIA INC
702 CLYDESDALE AVE

ANNISTON, AL 36201-5328

Attn: DONN WILLIAMS

Site Information

SOLUTIA
702 CLYDESDALE AVE

ANNISTON, AL 36201-5328

CERTIFICATE OF DISPOSAL

Chemical Waste Management, Inc. (ALD000622464) has received PCB material from
SOLUTIA

as described on Hazardous Waste Manifest Number 002734192GBF-1
Waste Management, Inc. hereby certifies that the above described material (excluding PCB liquids, if applicable) was landfilled on the dates shown below, in compliance with State and Federal Regulations.

Under civil and criminal penalties of law for the making or submission of false or fraudulent statements or representation (18 U.S.C. 1001 and 15 U.S.C. 2615), I certify that the information contained in or accompanying this document is true, accurate and complete. As to the identified section(s) of this document for which I cannot personally verify truth and accuracy, I certify as the company official having supervisory responsibility for the persons who, acting under my direct instructions, made the verification that this information is true, accurate and complete.

Al Talbott/am

Al Talbott, Safety Manager
September 02, 2015

OSD	Unique ID	Cont #	Profile	Disposed	Description
8/24/15	002734192GBF-01	1	CM9879	8/31/15	ANNISTON PCB SITE CONSENT DECR

BOX 25149

CWMI 119627a

Please print or type. (Form designed for use on elite (12-pitch) typewriter.)

Form Approved. OMB No. 2050-0039

UNIFORM HAZARDOUS WASTE MANIFEST

1. Generator ID Number: EXEMPT
2. Page 1 of 1
3. Emergency Response Phone: 770-337-4689
4. Manifest Tracking Number: 002734192 GBF

5. Generator's Name and Mailing Address
SOLUTIA, INC - ANNISTON PCB SITE
702 CLYDESDALE AVE
ANNISTON AL 36201
Generator's Phone: (601)807-1187

Generator's Site Address (if different than mailing address)

6. Transporter 1 Company Name: Robbie D Wood Inc
U.S. EPA ID Number: ALD067138891

7. Transporter 2 Company Name:
U.S. EPA ID Number:

8. Designated Facility Name and Site Address
CHEMICAL WASTE MANAGEMENT, INC.
HIGHWAY 17 NORTH, MILE MARKER 163
EMELLE AL 35459
Facility's Phone: (205)652-9721
U.S. EPA ID Number: ALD000622464

9a. HM	9b. U.S. DOT Description (including Proper Shipping Name, Hazard Class, ID Number, and Packing Group (if any))	10. Containers No.	10. Containers Type	11. Total Quantity	12. Unit Wt./Vol.	13. Waste Codes
X	1. UN3432,RQ,POLYCHLORINATED BIPHENYLS,SOLID,9,III CM9879	001	DT	18000	K	
	2.					
	3.					
	4.					

14. Special Handling Instructions and Additional Information
1. CM9879 ERG-171 PO#: 42557866 OSD: 8/24/15
ERI PROVIDER: CHEMTREC (CONTRACT CCN24117) Auto Clave

15. **GENERATOR'S/OFFEROR'S CERTIFICATION:** I hereby declare that the contents of this consignment are fully and accurately described above by the proper shipping name, and are classified, packaged, marked and labeled/placarded, and are in all respects in proper condition for transport according to applicable international and national governmental regulations. If export shipment and I am the Primary Exporter, I certify that the contents of this consignment conform to the terms of the attached EPA Acknowledgment of Consent.
I certify that the waste minimization statement identified in 40 CFR 262.27(a) (if I am a large quantity generator) or (b) (if I am a small quantity generator) is true.

Generator's/Offeror's Printed/Typed Name: DONN WILLIAMS
Signature: [signature]
Month 8 Day 24 Year 15

16. International Shipments ☐ Import to U.S. ☐ Export from U.S. Port of entry/exit:
Transporter signature (for exports only): Date leaving U.S.:

17. Transporter Acknowledgment of Receipt of Materials
Transporter 1 Printed/Typed Name: Clarence C Holt
Signature: [signature]
Month 08 Day 24 Year 15
Transporter 2 Printed/Typed Name:
Signature:
Month Day Year

18. Discrepancy
18a. Discrepancy Indication Space ☐ Quantity ☐ Type ☐ Residue ☐ Partial Rejection ☐ Full Rejection
Manifest Reference Number:
18b. Alternate Facility (or Generator)
U.S. EPA ID Number
Facility's Phone:
18c. Signature of Alternate Facility (or Generator)
Month Day Year

19. Hazardous Waste Report Management Method Codes (i.e., codes for hazardous waste treatment, disposal, and recycling systems)
1. H132
2.
3.
4.

20. Designated Facility Owner or Operator: Certification of receipt of hazardous materials covered by the manifest except as noted in Item 18a
Printed/Typed Name: Judy Bankhead
Signature: Judy Bankhead
Month 08 Day 31 Year 15

GENERATOR / INT'L / TRANSPORTER / DESIGNATED FACILITY

EPA Form 8700-22 (Rev. 3-05) Previous editions are obsolete.

DESIGNATED FACILITY TO GENERATOR

= Robbie D. Wood, Inc. =

P.O. BOX 125 DOLOMITE, ALABAMA 35061

NO. MC 142393

BILL OF LADING 186299

SHIPPER Solutia		LOADING CITY/STATE Anniston AL		MANIFEST NO. 0027341926BF
CONSIGNEE CWM		DESTINATION Emelle AL		
	TRACTOR NO. 433	TRAILER NO. 1665	BOX NO. 25149-2775	DATE SHIPPED 8-24-15
				LOAD NO.

COMP NO	LOADING TEMP ° F	COMMODITY	UNIT	QUANTITY

QUANTITY	
	Gross
	Tare
	Net
	Tons

LOADING TIME
IN M.
OUT M. AUTHORIZATION - LOADING DEMURRAGE

— — — — — — — — — — DENTENTION RECORD — — — EXPLAIN TIME SPENT — — — —

UNLOADING TIME
IN M.
OUT M. AUTHORIZATION - UNLOADING DEMURRAGE

GOVERNED BY TARIFFS AND CLASSIFICATIONS ISSUED BY THE CARRIER AND/OR ITS AGENTS

SHIPPER PER [signature]

CARRIER PER [signature]

RECEIVED THE ABOVE-DESCRIBED PROPERTY IN GOOD CONDITION EXCEPT AS NOTED

FIRM

BY

SHOW COMPLETE COMPANY NAME AND SIGNATURE
INITIALS NOT ACCEPTED

DELIVERY DATE

White - R. D. W. Yellow - R. D. W. Pink - Consignee Goldenrod - Shipper

Eaton Printi[illegible]2602 426-2647

23933

PRIORITY PRINTING - MERIDIAN, MISSISSIPPI

WASTE MANAGEMENT

Waste Management
Emelle Facility
WEIGHED ON CARDINAL SCALES

436863

GROSS 77660 lb

10:24AM 08/31/2015

GROSS

TARE

NET

GROSS 35520 lb

03:53PM 08/31/2015

42,140

19,115 kg

Customer: Solutia

Transporter: RDW

Truck #: 204 Trailer #: 25149

Receipt #: 508204 Manifest #: 002734192GBF

DIGITAL WEIGHT INDICATOR & PRINTER

WEIGHED BY JB

FORM 510

Chemical Waste Management
P.O. Box 55
36964 Alabama Hwy 17
Emelle, AL 35459-0055
(205)652-9721

SOLUTIA INC
702 CLYDESDALE AVE

ANNISTON,AL 36201-5328

Attn: DONN WILLIAMS

Site Infomation

SOLUTIA
702 CLYDESDALE AVE

ANNISTON,AL 36201-5328

ACKNOWLEDGEMENT OF RECEIPT OF WASTE SHIPMENT

Generator Name: SOLUTIA
Enclosed is/are your Generator Number Two copy / copies for Alabama Manifest Numbers:

002734192GBF

This copy is to acknowledge that Chemical Waste Management, Inc., of Emelle, Alabama has received your shipment. As a requirement of 40 CFR 264.12 (b), this letter serves to inform you that this facility has the proper permits and will accept your shipment upon completion of waste analysis procedures specified in the facility's Waste Analysis Plan and as determined in the approval waste profile submitted for this/these wastes.

As of September 26, 1997, Chemical Waste Management, Inc., Emelle Alabama (ALD000622464) is operating under a AHWMMA Permit, issued by the Alabama Department of Environmental Management. (RCRA)

Al Talbott
Safety Manager

September 02, 2015

25149

CWMI

Please print or type. (Form designed for use on elite (12-pitch) typewriter.)

Form Approved. OMB No. 2050-0039

UNIFORM HAZARDOUS WASTE MANIFEST

1. Generator ID Number: EXEMPT
2. Page 1 of: 1
3. Emergency Response Phone: 770-557-4660
4. Manifest Tracking Number: 002734192 GBF

GENERATOR

5. Generator's Name and Mailing Address
SOLUTIA, INC - ANNISTON PCB SITE
702 CLYDESDALE AVE
ANNISTON AL 36201
Generator's Phone: (601)807-1187

Generator's Site Address (if different than mailing address)

6. Transporter 1 Company Name — U.S. EPA ID Number

7. Transporter 2 Company Name — U.S. EPA ID Number

8. Designated Facility Name and Site Address — U.S. EPA ID Number
CHEMICAL WASTE MANAGEMENT, INC.
HIGHWAY 17 NORTH, MILE MARKER 163
EMELLE AL 35459
Facility's Phone: (205)652-9721
ALD000622464

9a. HM	9b. U.S. DOT Description (including Proper Shipping Name, Hazard Class, ID Number, and Packing Group (if any))	10. Containers No.	10. Containers Type	11. Total Quantity	12. Unit Wt./Vol.	13. Waste Codes
X	1. UN3432,RQ,POLYCHLORINATED BIPHENYLS,SOLID,9,III CM9879	001	DT	16000	K	
	2.					
	3.					
	4.					

14. Special Handling Instructions and Additional Information
1. CM9879 ERG-171 PO#: 4255786 OSD: 6/24/15
ERI PROVIDER: CHEMTREC (CONTRACT CCN24117)

15. **GENERATOR'S/OFFEROR'S CERTIFICATION:** I hereby declare that the contents of this consignment are fully and accurately described above by the proper shipping name, and are classified, packaged, marked and labeled/placarded, and are in all respects in proper condition for transport according to applicable international and national governmental regulations. If export shipment and I am the Primary Exporter, I certify that the contents of this consignment conform to the terms of the attached EPA Acknowledgment of Consent.
I certify that the waste minimization statement identified in 40 CFR 262.27(a) (if I am a large quantity generator) or (b) (if I am a small quantity generator) is true.

Generator's/Offeror's Printed/Typed Name: DONN WILLIAMS — Signature — Month: 8 Day: 24 Year: 15

INT'L

16. International Shipments ☐ Import to U.S. ☐ Export from U.S. Port of entry/exit:
Transporter signature (for exports only): Date leaving U.S.:

TRANSPORTER

17. Transporter Acknowledgment of Receipt of Materials

Transporter 1 Printed/Typed Name: CLARENCE HOLT — Signature — Month: 08 Day: 24 Year: 15

Transporter 2 Printed/Typed Name — Signature — Month — Day — Year

DESIGNATED FACILITY

18. Discrepancy

18a. Discrepancy Indication Space ☐ Quantity ☐ Type ☐ Residue ☐ Partial Rejection ☐ Full Rejection

Manifest Reference Number:

18b. Alternate Facility (or Generator) — U.S. EPA ID Number
Facility's Phone:

18c. Signature of Alternate Facility (or Generator) — Month — Day — Year

19. Hazardous Waste Report Management Method Codes (i.e., codes for hazardous waste treatment, disposal, and recycling systems)

1.	2.	3.	4.

20. Designated Facility Owner or Operator: Certification of receipt of hazardous materials covered by the manifest except as noted in Item 18a

Printed/Typed Name — Signature — Month — Day — Year

EPA Form 8700-22 (Rev. 3-05) Previous editions are obsolete.

GENERATOR'S INITIAL COPY

CWMI

Please print or type. (Form designed for use on elite (12-pitch) typewriter.)

Form Approved. OMB No. 2050-0039

UNIFORM HAZARDOUS WASTE MANIFEST

1. Generator ID Number: EXEMPT
2. Page 1 of 1
3. Emergency Response Phone:
4. Manifest Tracking Number: 002734193 GBF

5. Generator's Name and Mailing Address
SOLUTIA, INC - ANNISTON PCB SITE
702 CLYDESDALE AVE
ANNISTON AL 36201
Generator's Phone: (601)807-1187

Generator's Site Address (if different than mailing address)

6. Transporter 1 Company Name — U.S. EPA ID Number

7. Transporter 2 Company Name — U.S. EPA ID Number

8. Designated Facility Name and Site Address
CHEMICAL WASTE MANAGEMENT, INC.
HIGHWAY 17 NORTH, MILE MARKER 163
EMELLE AL 35459
Facility's Phone: (205)652-9721
U.S. EPA ID Number: ALD000622464

9a. HM	9b. U.S. DOT Description (including Proper Shipping Name, Hazard Class, ID Number, and Packing Group (if any))	10. Containers No.	10. Containers Type	11. Total Quantity	12. Unit Wt./Vol.	13. Waste Codes
X	1. UN3432,RQ,POLYCHLORINATED BIPHENYLS,SOLID,9,III CM9879	001	DT	18000	K	
	2.					
	3.					
	4.					

14. Special Handling Instructions and Additional Information
1. CM9879 ERG-171 PO#: 42557866 OSD: 8/19/2015 Gen # 913
ERI PROVIDER: CHEMTREC (CONTRACT CCN24117) Aida Clark

15. **GENERATOR'S/OFFEROR'S CERTIFICATION:** I hereby declare that the contents of this consignment are fully and accurately described above by the proper shipping name, and are classified, packaged, marked and labeled/placarded, and are in all respects in proper condition for transport according to applicable international and national governmental regulations. If export shipment and I am the Primary Exporter, I certify that the contents of this consignment conform to the terms of the attached EPA Acknowledgment of Consent.
I certify that the waste minimization statement identified in 40 CFR 262.27(a) (if I am a large quantity generator) or (b) (if I am a small quantity generator) is true.

Generator's/Offeror's Printed/Typed Name: DONN WILLIAMS — Signature: [signature] — Month 8 Day 25 Year 15

16. International Shipments ☐ Import to U.S. ☐ Export from U.S. Port of entry/exit:
Transporter signature (for exports only): Date leaving U.S.:

17. Transporter Acknowledgment of Receipt of Materials
Transporter 1 Printed/Typed Name: Floyd Carter — Signature: [signature] — Month 8 Day 25 Year 15
Transporter 2 Printed/Typed Name — Signature — Month Day Year

18. Discrepancy
18a. Discrepancy Indication Space ☐ Quantity ☐ Type ☐ Residue ☐ Partial Rejection ☐ Full Rejection
Manifest Reference Number:
18b. Alternate Facility (or Generator) — U.S. EPA ID Number
Facility's Phone:
18c. Signature of Alternate Facility (or Generator) — Month Day Year

19. Hazardous Waste Report Management Method Codes (i.e., codes for hazardous waste treatment, disposal, and recycling systems)
1. 2. 3. 4.

20. Designated Facility Owner or Operator: Certification of receipt of hazardous materials covered by the manifest except as noted in Item 18a
Printed/Typed Name — Signature — Month Day Year

GENERATOR — INT'L — TRANSPORTER — DESIGNATED FACILITY

EPA Form 8700-22 (Rev. 3-05) Previous editions are obsolete.

GENERATOR'S INITIAL COPY

APPENDIX D1.6

Groundwater Extraction Wells

CWM!

Please print or type. (Form designed for use on elite (12-pitch) typewriter.)

Form Approved. OMB No. 2050-0039

UNIFORM HAZARDOUS WASTE MANIFEST

1. Generator ID Number	2. Page 1 of	3. Emergency Response Phone	4. Manifest Tracking Number
EXEMPT	1	[illegible] 4609	002734146 GBF

GENERATOR

5. Generator's Name and Mailing Address

SOLUTIA, INC - ANNISTON PCB SITE
702 CLYDESDALE AVE
ANNISTON AL 36201

Generator's Phone: (601)807-1187

Generator's Site Address (if different than mailing address)

6. Transporter 1 Company Name — U.S. EPA ID Number

7. Transporter 2 Company Name — U.S. EPA ID Number

8. Designated Facility Name and Site Address — U.S. EPA ID Number

CHEMICAL WASTE MANAGEMENT, INC.
HIGHWAY 17 NORTH, MILE MARKER 163
EMELLE AL 35459

Facility's Phone: (205)652-9721

ALD000622464

9a. HM	9b. U.S. DOT Description (including Proper Shipping Name, Hazard Class, ID Number, and Packing Group (if any))	10. Containers No.	10. Containers Type	11. Total Quantity	12. Unit Wt./Vol.	13. Waste Codes
X	1. UN3432,RQ,POLYCHLORINATED BIPHENYLS,SOLID,9,III CM9879	001	DT CAT	18000	K	
	2.					
	3.					
	4.					

14. Special Handling Instructions and Additional Information

1. CM9879 ERG-171 POE: 4055786 OSD: 2/8/16

ERI PROVIDER: CHEMTREC (CONTRACT CCN24117)

Box - 2583
Northside GW

15. **GENERATOR'S/OFFEROR'S CERTIFICATION:** I hereby declare that the contents of this consignment are fully and accurately described above by the proper shipping name, and are classified, packaged, marked and labeled/placarded, and are in all respects in proper condition for transport according to applicable international and national governmental regulations. If export shipment and I am the Primary Exporter, I certify that the contents of this consignment conform to the terms of the attached EPA Acknowledgment of Consent.
I certify that the waste minimization statement identified in 40 CFR 262.27(a) (if I am a large quantity generator) or (b) (if I am a small quantity generator) is true.

Generator's/Offeror's Printed/Typed Name	Signature	Month	Day	Year
DONN WILLIAMS	D Williams	2	8	16

INT'L

16. International Shipments ☐ Import to U.S. ☐ Export from U.S. Port of entry/exit:

Transporter signature (for exports only): Date leaving U.S.:

TRANSPORTER

17. Transporter Acknowledgment of Receipt of Materials

Transporter 1 Printed/Typed Name	Signature	Month	Day	Year
Randy Gunter	[illegible]	2	8	16
Transporter 2 Printed/Typed Name	Signature	Month	Day	Year

DESIGNATED FACILITY

18. Discrepancy

18a. Discrepancy Indication Space ☐ Quantity ☐ Type ☐ Residue ☐ Partial Rejection ☐ Full Rejection

Manifest Reference Number:

18b. Alternate Facility (or Generator) — U.S. EPA ID Number

Facility's Phone:

18c. Signature of Alternate Facility (or Generator) — Month Day Year

19. Hazardous Waste Report Management Method Codes (i.e., codes for hazardous waste treatment, disposal, and recycling systems)

1.	2.	3.	4.

20. Designated Facility Owner or Operator: Certification of receipt of hazardous materials covered by the manifest except as noted in Item 18a

Printed/Typed Name	Signature	Month	Day	Year

EPA Form 8700-22 (Rev. 3-05) Previous editions are obsolete.

GENERATOR'S INITIAL COPY

CWMI

Please print or type. (Form designed for use on elite (12-pitch) typewriter.) Form Approved. OMB No. 2050-0039

UNIFORM HAZARDOUS WASTE MANIFEST

1. Generator ID Number: EXEMPT
2. Page 1 of: 1
3. Emergency Response Phone: 601 607-1187
4. Manifest Tracking Number: 002734147 GBF

GENERATOR

5. Generator's Name and Mailing Address
SOLUTIA, INC - ANNISTON PCB SITE
702 CLYDESDALE AVE
ANNISTON AL 36201
Generator's Phone: (601)607-1187

Generator's Site Address (if different than mailing address)

6. Transporter 1 Company Name — U.S. EPA ID Number

7. Transporter 2 Company Name — U.S. EPA ID Number

8. Designated Facility Name and Site Address
CHEMICAL WASTE MANAGEMENT, INC.
HIGHWAY 17 NORTH, MILE MARKER 163
EMELLE AL 35459
Facility's Phone: (205)652-9721
U.S. EPA ID Number: ALD000622464

9a. HM	9b. U.S. DOT Description (including Proper Shipping Name, Hazard Class, ID Number, and Packing Group (if any))	10. Containers No.	10. Containers Type	11. Total Quantity	12. Unit Wt./Vol.	13. Waste Codes
X	1. UN3432,RQ,POLYCHLORINATED BIPHENYLS,SOLID,9,III CM9879	001	DT CAA	18000	K	
	2.					
	3.					
	4.					

14. Special Handling Instructions and Additional Information
1. CM9879 ERG-171 PO#: OSD: 11/22/16
Box 25132 Northside GW
ERI PROVIDER: CHEMTREC (CONTRACT CCN24117)

15. **GENERATOR'S/OFFEROR'S CERTIFICATION:** I hereby declare that the contents of this consignment are fully and accurately described above by the proper shipping name, and are classified, packaged, marked and labeled/placarded, and are in all respects in proper condition for transport according to applicable international and national governmental regulations. If export shipment and I am the Primary Exporter, I certify that the contents of this consignment conform to the terms of the attached EPA Acknowledgment of Consent.
I certify that the waste minimization statement identified in 40 CFR 262.27(a) (if I am a large quantity generator) or (b) (if I am a small quantity generator) is true.

Generator's/Offeror's Printed/Typed Name: DONN WILLIAMS — Signature: DW — Month: 11 Day: 22 Year: 16

INT'L

16. International Shipments ☐ Import to U.S. ☐ Export from U.S. Port of entry/exit:
Transporter signature (for exports only): Date leaving U.S.:

TRANSPORTER

17. Transporter Acknowledgment of Receipt of Materials

Transporter 1 Printed/Typed Name: Charles McCullar — Signature: Charles McCullar — Month: 11 Day: 22 Year: 16

Transporter 2 Printed/Typed Name — Signature — Month — Day — Year

DESIGNATED FACILITY

18. Discrepancy

18a. Discrepancy Indication Space ☐ Quantity ☐ Type ☐ Residue ☐ Partial Rejection ☐ Full Rejection

Manifest Reference Number:

18b. Alternate Facility (or Generator) — U.S. EPA ID Number

Facility's Phone:

18c. Signature of Alternate Facility (or Generator) — Month — Day — Year

19. Hazardous Waste Report Management Method Codes (i.e., codes for hazardous waste treatment, disposal, and recycling systems)

1.	2.	3.	4.

20. Designated Facility Owner or Operator: Certification of receipt of hazardous materials covered by the manifest except as noted in Item 18a

Printed/Typed Name — Signature — Month — Day — Year

EPA Form 8700-22 (Rev. 3-05) Previous editions are obsolete.

GENERATOR'S INITIAL COPY

CWMI

Please print or type. (Form designed for use on elite (12-pitch) typewriter.) Form Approved. OMB No. 2050-0039

UNIFORM HAZARDOUS WASTE MANIFEST

1. Generator ID Number: EXEMPT
2. Page 1 of: 1
3. Emergency Response Phone:
4. Manifest Tracking Number: 002734150 GBF

GENERATOR

5. Generator's Name and Mailing Address:
SOLUTIA, INC - ANNISTON PCB SITE
702 CLYDESDALE AVE
ANNISTON AL 36201
Generator's Phone: (601)307-1187

Generator's Site Address (if different than mailing address):

6. Transporter 1 Company Name:
U.S. EPA ID Number:

7. Transporter 2 Company Name:
U.S. EPA ID Number:

8. Designated Facility Name and Site Address:
CHEMICAL WASTE MANAGEMENT, INC.
HIGHWAY 17 NORTH, MILE MARKER 163
EMELLE AL 35459
Facility's Phone: (205)652-9721
U.S. EPA ID Number: ALD000622464

9a. HM	9b. U.S. DOT Description (including Proper Shipping Name, Hazard Class, ID Number, and Packing Group (if any))	10. Containers No.	10. Containers Type	11. Total Quantity	12. Unit Wt./Vol.	13. Waste Codes
X	1. UN3432,RQ,POLYCHLORINATED BIPHENYLS,SOLID,9,III CM0879	001	~~DF~~ CM	18000	K	
	2.					
	3.					
	4.					

14. Special Handling Instructions and Additional Information
1. CM0879 ERG-171 PO#: OSD: 1/21/16 Box 827
ERI PROVIDER: CHEMTREC (CONTRACT CCN24117)

15. **GENERATOR'S/OFFEROR'S CERTIFICATION:** I hereby declare that the contents of this consignment are fully and accurately described above by the proper shipping name, and are classified, packaged, marked and labeled/placarded, and are in all respects in proper condition for transport according to applicable international and national governmental regulations. If export shipment and I am the Primary Exporter, I certify that the contents of this consignment conform to the terms of the attached EPA Acknowledgment of Consent.
I certify that the waste minimization statement identified in 40 CFR 262.27(a) (if I am a large quantity generator) or (b) (if I am a small quantity generator) is true.

Generator's/Offeror's Printed/Typed Name: DONN WILLIAMS
Signature: DW
Month: 1 Day: 21 Year: 16

INT'L

16. International Shipments ☐ Import to U.S. ☐ Export from U.S. Port of entry/exit:
Transporter signature (for exports only): Date leaving U.S.:

TRANSPORTER

17. Transporter Acknowledgment of Receipt of Materials

Transporter 1 Printed/Typed Name: Charles McCullar
Signature: Charles McCullar
Month: 01 Day: 21 Year: 16

Transporter 2 Printed/Typed Name:
Signature:
Month: Day: Year:

DESIGNATED FACILITY

18. Discrepancy

18a. Discrepancy Indication Space ☐ Quantity ☐ Type ☐ Residue ☐ Partial Rejection ☐ Full Rejection

Manifest Reference Number:

18b. Alternate Facility (or Generator)
U.S. EPA ID Number:
Facility's Phone:

18c. Signature of Alternate Facility (or Generator)
Month: Day: Year:

19. Hazardous Waste Report Management Method Codes (i.e., codes for hazardous waste treatment, disposal, and recycling systems)

1.	2.	3.	4.

20. Designated Facility Owner or Operator: Certification of receipt of hazardous materials covered by the manifest except as noted in Item 18a

Printed/Typed Name:
Signature:
Month: Day: Year:

EPA Form 8700-22 (Rev. 3-05) Previous editions are obsolete.

GENERATOR'S INITIAL COPY

CWMI

Please print or type. (Form designed for use on elite (12-pitch) typewriter.)

Form Approved. OMB No. 2050-0039

UNIFORM HAZARDOUS WASTE MANIFEST

1. Generator ID Number: EXEMPT
2. Page 1 of 1
3. Emergency Response Phone: [illegible]
4. Manifest Tracking Number: 002734152 GBF

5. Generator's Name and Mailing Address
SOLUTIA, INC - ANNISTON PCB SITE
702 CLYDESDALE AVE
ANNISTON AL 36201
Generator's Phone: (601)807-1187

Generator's Site Address (if different than mailing address)

6. Transporter 1 Company Name: Robbie Dwood Inc
U.S. EPA ID Number: ALD067132891

7. Transporter 2 Company Name:
U.S. EPA ID Number:

8. Designated Facility Name and Site Address
CHEMICAL WASTE MANAGEMENT, INC.
HIGHWAY 17 NORTH, MILE MARKER 163
EMELLE AL 35459
Facility's Phone: (205)652-9721
U.S. EPA ID Number: ALD000622464

9a. HM	9b. U.S. DOT Description (including Proper Shipping Name, Hazard Class, ID Number, and Packing Group (if any))	10. Containers No.	10. Containers Type	11. Total Quantity	12. Unit Wt./Vol.	13. Waste Codes
X	1. UN3432,RQ,POLYCHLORINATED BIPHENYLS,SOLID,9,III CM9879	001	DT	18000	K	
	2.					
	3.					
	4.					

14. Special Handling Instructions and Additional Information
1. CM9879 ERG-171 PO#: OSD: 1/19/16 Box C-2500 GW Northside Prp.
ERI PROVIDER: CHEMTREC (CONTRACT CCN24117)

15. **GENERATOR'S/OFFEROR'S CERTIFICATION:** I hereby declare that the contents of this consignment are fully and accurately described above by the proper shipping name, and are classified, packaged, marked and labeled/placarded, and are in all respects in proper condition for transport according to applicable international and national governmental regulations. If export shipment and I am the Primary Exporter, I certify that the contents of this consignment conform to the terms of the attached EPA Acknowledgment of Consent.
I certify that the waste minimization statement identified in 40 CFR 262.27(a) (if I am a large quantity generator) or (b) (if I am a small quantity generator) is true.

Generator's/Offeror's Printed/Typed Name: DONN WILLIAMS
Signature: [signature]
Month 1 Day 19 Year 16

16. International Shipments ☐ Import to U.S. ☐ Export from U.S. Port of entry/exit:
Transporter signature (for exports only): Date leaving U.S.:

17. Transporter Acknowledgment of Receipt of Materials
Transporter 1 Printed/Typed Name: Tony Weaver
Signature: [signature]
Month 1 Day 19 Year 16
Transporter 2 Printed/Typed Name:
Signature:
Month Day Year

18. Discrepancy
18a. Discrepancy Indication Space ☐ Quantity ☐ Type ☐ Residue ☐ Partial Rejection ☐ Full Rejection
Manifest Reference Number:

18b. Alternate Facility (or Generator)
U.S. EPA ID Number
Facility's Phone:

18c. Signature of Alternate Facility (or Generator)
Month Day Year

19. Hazardous Waste Report Management Method Codes (i.e., codes for hazardous waste treatment, disposal, and recycling systems)
1. 2. 3. 4.

20. Designated Facility Owner or Operator: Certification of receipt of hazardous materials covered by the manifest except as noted in Item 18a
Printed/Typed Name
Signature
Month Day Year

GENERATOR — INT'L — TRANSPORTER — DESIGNATED FACILITY

EPA Form 8700-22 (Rev. 3-05) Previous editions are obsolete.

GENERATOR'S INITIAL COPY

Box # 25157

CWMI

Please print or type. (Form designed for use on elite (12-pitch) typewriter.)

Form Approved. OMB No. 2050-0039

UNIFORM HAZARDOUS WASTE MANIFEST

1. Generator ID Number	2. Page 1 of	3. Emergency Response Phone	4. Manifest Tracking Number
EXEMPT	1		002734179 GBF

GENERATOR

5. Generator's Name and Mailing Address

SOLUTIA, INC - ANNISTON PCB SITE
702 CLYDESDALE AVE
ANNISTON AL 36201
Generator's Phone: (256) 237-1187

Generator's Site Address (if different than mailing address)

6. Transporter 1 Company Name: R D Wells — U.S. EPA ID Number:

7. Transporter 2 Company Name — U.S. EPA ID Number:

8. Designated Facility Name and Site Address

CHEMICAL WASTE MANAGEMENT, INC.
HIGHWAY 17 NORTH, MILE MARKER 163
EMELLE AL 35459

Facility's Phone: (205) 652-9721

U.S. EPA ID Number: ALD000622464

9a. HM	9b. U.S. DOT Description (including Proper Shipping Name, Hazard Class, ID Number, and Packing Group (if any))	10. Containers No.	10. Containers Type	11. Total Quantity	12. Unit Wt./Vol.	13. Waste Codes
X	1. UN3432,RQ,POLYCHLORINATED BIPHENYLS,SOLID,9,III CM9879	001	DT	18000	K	
	2.					
	3.					
	4.					

14. Special Handling Instructions and Additional Information

1. CM9879 ERG-171 POH: 42 55 1866 OSD: 9/28/15 Att: Anne C/O Box 25157

ERI PROVIDER: CHEMTREC (CONTRACT CCN24117)

15. **GENERATOR'S/OFFEROR'S CERTIFICATION:** I hereby declare that the contents of this consignment are fully and accurately described above by the proper shipping name, and are classified, packaged, marked and labeled/placarded, and are in all respects in proper condition for transport according to applicable international and national governmental regulations. If export shipment and I am the Primary Exporter, I certify that the contents of this consignment conform to the terms of the attached EPA Acknowledgment of Consent.
I certify that the waste minimization statement identified in 40 CFR 262.27(a) (if I am a large quantity generator) or (b) (if I am a small quantity generator) is true.

Generator's/Offeror's Printed/Typed Name	Signature	Month	Day	Year
DONN WILLIAMS		9	24	15

INT'L

16. International Shipments ☐ Import to U.S. ☐ Export from U.S. Port of entry/exit:

Transporter signature (for exports only): Date leaving U.S.:

TRANSPORTER

17. Transporter Acknowledgment of Receipt of Materials

Transporter 1 Printed/Typed Name	Signature	Month	Day	Year
		9	28	15
Transporter 2 Printed/Typed Name	Signature	Month	Day	Year

DESIGNATED FACILITY

18. Discrepancy

18a. Discrepancy Indication Space ☐ Quantity ☐ Type ☐ Residue ☐ Partial Rejection ☐ Full Rejection

Manifest Reference Number:

18b. Alternate Facility (or Generator) — U.S. EPA ID Number

Facility's Phone:

18c. Signature of Alternate Facility (or Generator) — Month / Day / Year

19. Hazardous Waste Report Management Method Codes (i.e., codes for hazardous waste treatment, disposal, and recycling systems)

1.	2.	3.	4.

20. Designated Facility Owner or Operator: Certification of receipt of hazardous materials covered by the manifest except as noted in Item 18a

Printed/Typed Name	Signature	Month	Day	Year

EPA Form 8700-22 (Rev. 3-05) Previous editions are obsolete.

GENERATOR'S INITIAL COPY

Box 816

CWMI

Please print or type. (Form designed for use on elite (12-pitch) typewriter.)

Form Approved. OMB No. 2050-0039

UNIFORM HAZARDOUS WASTE MANIFEST	1. Generator ID Number	2. Page 1 of	3. Emergency Response Phone	4. Manifest Tracking Number
	EXEMPT		601-807-1187	002916269 GBF

GENERATOR

5. Generator's Name and Mailing Address

SOLUTIA, INC - ANNISTON PCB SITE
702 CLYDESDALE AVE
ANNISTON AL 36201

Generator's Phone: (601)807-1187

Generator's Site Address (if different than mailing address)

ANNISTON PCB SITE
0 PARKWIN
ANNISTON AL 36201

6. Transporter 1 Company Name: Robbie D. Wood — U.S. EPA ID Number: ALD067138891

7. Transporter 2 Company Name — U.S. EPA ID Number

8. Designated Facility Name and Site Address — U.S. EPA ID Number

CHEMICAL WASTE MANAGEMENT, INC.
HIGHWAY 17 NORTH, MILE MARKER 163
EMELLE AL 35459

Facility's Phone: (205)652-9721 — ALD000622464

9a. HM	9b. U.S. DOT Description (including Proper Shipping Name, Hazard Class, ID Number, and Packing Group (if any))	10 Containers No.	10 Containers Type	11 Total Quantity	12. Unit Wt./Vol.	13. Waste Codes
X	1. UN3432,RQ,POLYCHLORINATED BIPHENYLS,SOLID,9,III CM9879	001	CM	~~18000~~ K 10832 cm		
	2.					
	3.					
	4.					

14. Special Handling Instructions and Additional Information

1. CM9879 ERG-171 PO#: 4255186 OSD: 3/10/16 Box 816

ERI PROVIDER: CHEMTREC (CONTRACT CCN24117)

15. GENERATOR'S/OFFEROR'S CERTIFICATION: I hereby declare that the contents of this consignment are fully and accurately described above by the proper shipping name, and are classified, packaged, marked and labeled/placarded, and are in all respects in proper condition for transport according to applicable international and national governmental regulations. If export shipment and I am the Primary Exporter, I certify that the contents of this consignment conform to the terms of the attached EPA Acknowledgment of Consent.
I certify that the waste minimization statement identified in 40 CFR 262.27(a) (if I am a large quantity generator) or (b) (if I am a small quantity generator) is true.

Generator's/Offeror's Printed/Typed Name: DONN WILLIAMS — Signature: DWilliams — Month 3 Day 10 Year 16

INT'L

16. International Shipments ☐ Import to U.S. ☐ Export from U.S. Port of entry/exit:
Transporter signature (for exports only): Date leaving U.S.:

TRANSPORTER

17. Transporter Acknowledgment of Receipt of Materials

Transporter 1 Printed/Typed Name: Rick Dodson — Signature: Rick Dodson — Month 3 Day 10 Year 16

Transporter 2 Printed/Typed Name — Signature — Month Day Year

DESIGNATED FACILITY

18. Discrepancy

18a. Discrepancy Indication Space ☐ Quantity ☐ Type ☐ Residue ☐ Partial Rejection ☐ Full Rejection

Corrected Kg wt per Donn Williams 3/16/16 cm.

Manifest Reference Number:

18b. Alternate Facility (or Generator) — U.S. EPA ID Number

Facility's Phone:

18c. Signature of Alternate Facility (or Generator) — Month Day Year

19. Hazardous Waste Report Management Method Codes (i.e., codes for hazardous waste treatment, disposal, and recycling systems)

1.	2.	3.	4.
M132			

20. Designated Facility Owner or Operator: Certification of receipt of hazardous materials covered by the manifest except as noted in Item 18a

Printed/Typed Name: Adonis Boerner — Signature: Adonis Boerner — Month 3 Day 16 Year 16

EPA Form 8700-22 (Rev. 3-05) Previous editions are obsolete.

DESIGNATED FACILITY TO DESTINATION STATE (IF REQUIRED)

k26

10

CWM, INC. - EMELLE ***** Receipt # 512807 ***** Page - 1

Date/Time In 3/16/16 8:55
Load Type Rolloff Federal EPA ID ALD067136891
Transporter ROBBIE D WOOD INC
DOLOMITE AL

** WEIGHT SUMMARY **
Gross 64020.00
Tare 40140.00
Net 23880.00
Adj. .00
Adj. Net .00

Truck Number 203 Trailer/Contar #1 816 #2 #3

10832K

Rcpt Ln#	Doc Ln#	Document Number	Profile Sales	Profile Generator Invoicing Customer	Cnt #	Cnt Code	Total Quan.	W DCS V Units	PCB	Sched Cat	Federal EPA Waste Status	ADEM #
1	1	002916269GBF	CM9879	SOLUTIA ANNISTON AL	1	CM	18000.00	K Kilogram	Y	PLFB	GC Undeterminable	073116-C007

Doc Seq # 1 EME SOLUTIA P.O. Num COD Req'd

>51% OR <51% DEBRIS (CIRCLE)
PREFILLED VAULT Y OR N (CIRCLE)
>51% OR <51% HAC 10% INSPECTION (CIRCLE)
BULK MATERIAL ONLY:
SAMPLED/INSPECTED_____ FREE LIQUIDS DETECTED? YES / NO
SELECT MATERIAL/NON-SELECT MATERIAL_____ MIXED DISPERSAL MATERIAL? YES / NO

PHYSICAL DESCRIPTION OF WASTE:_____ SAMPLER/APPROVAL_____

SPOT SAMPLE:____BIG-_____ PHYS. DESCRIPTION_____
RAD. SCREEN POS NEG
IGN. SCREEN POS NEG
H2O SOL. S F PT/SOL
H2O RXN/TEMP. INITIAL NO RXN REACTS___
H2O RXN/TEMP. 5MIN. NO RXN REACTS
ph (PAPER)_____
CN_SCREEN + - (PRUSSIAN BLUE)_ __ _
CN SCREEN + - (CYANTESMO)
SULFIDE SCREEN + -
ADDITIONAL ANALYTICAL REQ'D? Y N_____
DESCRIBE:_____
PCB CONC. (PPM)_____ SULFIDE (9030)_____
%H2O BY KF_____ CYANIDE (9010C)_____ TAB WASTE Y N
PAINT FILTER TEST/ P F SPEC. GRAVITY_____ BNZ CONC.____PPM
COMMENTS:(SAFETY/OPERATIONAL)_____

COMPAT. TEST W/_____ OK___RXN__

ADD'L SPOT SAMPLE ATTACHED? Y N_____
DISPOSAL METHOD: S SP ST-3 ST-3/PT P-ST-3 P-ST-3/PT ST-5 ST-5/PT P-ST-5 SOL-PTA B-PIH OTHER_____
P-ST-5/PT ST-8 ST-8/PT HIC HAC (HAC INSPECT) F INC SP-VS PCB-HAC P-HAC
P-ST-8 P-ST-8/PT VS-3 VS-5 VS-8
INDICATOR PARAMETER WILL BE CIRCLED
B-HAC LOADS REQUIRING INSPECTION THAT ARE FOUND TO BE LESS THAN 51% MUST
BE RETURNED TO LAB AND PLACED ON HOLD._____
RELEASED FOR DISPOSAL BY:_____ DATE:_____

CWM

Please print or type. (Form designed for use on elite (12-pitch) typewriter.) Form Approved. OMB No. 2050-0039

UNIFORM HAZARDOUS WASTE MANIFEST

1. Generator ID Number: EXEMPT
2. Page 1 of
3. Emergency Response Phone
4. Manifest Tracking Number: 002916270 GBF

5. Generator's Name and Mailing Address
SOLUTIA, INC - ANNISTON PCB SITE
702 CLYDESDALE AVE
ANNISTON AL 36201
Generator's Phone: (601)807-1187

Generator's Site Address (if different than mailing address)
ANNISTON PCB SITE
0 PARKWIN
ANNISTON AL 36201

6. Transporter 1 Company Name: Lonnie D. Ward — U.S. EPA ID Number: ALD007178891

7. Transporter 2 Company Name — U.S. EPA ID Number

8. Designated Facility Name and Site Address
CHEMICAL WASTE MANAGEMENT, INC.
HIGHWAY 17 NORTH, MILE MARKER 163
EMELLE AL 35459
Facility's Phone: (205)652-9721
U.S. EPA ID Number: ALD000622464

9a. HM	9b. U.S. DOT Description (including Proper Shipping Name, Hazard Class, ID Number, and Packing Group (if any))	10. Containers No.	Type	11. Total Quantity	12. Unit Wt./Vol.	13. Waste Codes
X	1. UN3432,RQ,POLYCHLORINATED BIPHENYLS,SOLID,9,III CM9879	001	CM	18000	K	
	2.					
	3.					
	4.					

14. Special Handling Instructions and Additional Information
1. CM9879 ERG-171 PO#: 40557866 OSD: 4/15/16 Box 25205
ERI PROVIDER: CHEMTREC (CONTRACT CCN24117)

15. **GENERATOR'S/OFFEROR'S CERTIFICATION:** I hereby declare that the contents of this consignment are fully and accurately described above by the proper shipping name, and are classified, packaged, marked and labeled/placarded, and are in all respects in proper condition for transport according to applicable international and national governmental regulations. If export shipment and I am the Primary Exporter, I certify that the contents of this consignment conform to the terms of the attached EPA Acknowledgment of Consent.
I certify that the waste minimization statement identified in 40 CFR 262.27(a) (if I am a large quantity generator) or (b) (if I am a small quantity generator) is true.

Generator's/Offeror's Printed/Typed Name: DONN WILLIAMS — Signature: [signature] — Month 4 Day 15 Year 16

16. International Shipments ☐ Import to U.S. ☐ Export from U.S. Port of entry/exit:
Transporter signature (for exports only): Date leaving U.S.:

17. Transporter Acknowledgment of Receipt of Materials
Transporter 1 Printed/Typed Name: [illegible] — Signature: [signature] — Month Day 15 Year 16
Transporter 2 Printed/Typed Name — Signature — Month Day Year

18. Discrepancy
18a. Discrepancy Indication Space ☐ Quantity ☐ Type ☐ Residue ☐ Partial Rejection ☐ Full Rejection
Manifest Reference Number:
18b. Alternate Facility (or Generator) — U.S. EPA ID Number
Facility's Phone:
18c. Signature of Alternate Facility (or Generator) — Month Day Year

19. Hazardous Waste Report Management Method Codes (i.e., codes for hazardous waste treatment, disposal, and recycling systems)
1. 2. 3. 4.

20. Designated Facility Owner or Operator: Certification of receipt of hazardous materials covered by the manifest except as noted in Item 18a
Printed/Typed Name — Signature — Month Day Year

GENERATOR — INT'L — TRANSPORTER — DESIGNATED FACILITY

EPA Form 8700-22 (Rev. 3-05) Previous editions are obsolete.

GENERATOR'S INITIAL COPY

Robbie D. Wood, Inc.

P.O. BOX 125 DOLOMITE, ALABAMA 35061

NO. MC 142393

BILL OF LADING 158017

SHIPPER SOLUTIA	LOADING CITY/STATE ANNISTON, AL.		MANIFEST NO. 0026[illegible]
CONSIGNEE WM	DESTINATION Emelle, AL.		
	TRACTOR NO. 394	TRAILER NO. 1620	BOX NO. 2026
			DATE SHIPPED
			LOAD NO. 1195869

COMP NO	LOADING TEMP ° F	COMMODITY	UNIT	QUANTITY

QUANTITY	
	Gross
	Tare
	Net
	Tons

LOADING TIME
IN M.
OUT M. AUTHORIZATION - LOADING DEMURRAGE

DENTENTION RECORD — EXPLAIN TIME SPENT

UNLOADING TIME
IN M.
OUT M. AUTHORIZATION - UNLOADING DEMURRAGE

GOVERNED BY TARIFFS AND CLASSIFICATIONS ISSUED BY THE CARRIER AND/OR ITS AGENTS

SHIPPER PER [signature]

CARRIER PER [signature]

RECEIVED THE ABOVE-DESCRIBED PROPERTY IN GOOD CONDITION EXCEPT AS NOTED

FIRM

BY

SHOW COMPLETE COMPANY NAME AND SIGNATURE INITIALS NOT ACCEPTED

DELIVERY DATE

White - R. D. W. Yellow - R. D. W. Pink - Consignee Goldenrod - Shipper

Eaton Printing 112602 426-2647

Pool # 121651 Box # 2583 CWM

Please print or type. (Form designed for use on elite (12-pitch) typewriter.) Form Approved. OMB No. 2050-0039

UNIFORM HAZARDOUS WASTE MANIFEST	1. Generator ID Number	2. Page 1 of	3. Emergency Response Phone	4. Manifest Tracking Number
	EXEMPT	1		002916271 GBF

GENERATOR

5. Generator's Name and Mailing Address

SOLUTIA, INC - ANNISTON PCB SITE
702 CLYDESDALE AVE
ANNISTON AL 36201
Generator's Phone: (401)987-1187

Generator's Site Address (if different than mailing address)

ANNISTON PCB SITE
0 PARKWIN
ANNISTON AL 36201

6. Transporter 1 Company Name: Rabbie D Wood Inc. — U.S. EPA ID Number: ALD067138891

7. Transporter 2 Company Name — U.S. EPA ID Number:

8. Designated Facility Name and Site Address

CHEMICAL WASTE MANAGEMENT, INC.
HIGHWAY 17 NORTH, MILE MARKER 163
EMELLE AL 35459
Facility's Phone: (205)652-9721

U.S. EPA ID Number: ALD000622454

9a. HM	9b. U.S. DOT Description (including Proper Shipping Name, Hazard Class, ID Number, and Packing Group (if any))	10. Containers No.	10. Containers Type	11. Total Quantity	12. Unit Wt./Vol.	13. Waste Codes
X	1. UN3432,RQ,POLYCHLORINATED BIPHENYLS,SOLID,9,III CM9879	001	CM	18000	K	
	2.					
	3.					
	4.					

14. Special Handling Instructions and Additional Information

1. CM9879 ERG-171 PO#: 4055786 OSD: 4/15/16 Box 2583

ERI PROVIDER: CHEMTREC (CONTRACT CCN24117)

15. GENERATOR'S/OFFEROR'S CERTIFICATION: I hereby declare that the contents of this consignment are fully and accurately described above by the proper shipping name, and are classified, packaged, marked and labeled/placarded, and are in all respects in proper condition for transport according to applicable international and national governmental regulations. If export shipment and I am the Primary Exporter, I certify that the contents of this consignment conform to the terms of the attached EPA Acknowledgment of Consent.
I certify that the waste minimization statement identified in 40 CFR 262.27(a) (if I am a large quantity generator) or (b) (if I am a small quantity generator) is true.

Generator's/Offeror's Printed/Typed Name: DONN WILLIAMS — Signature: [signature] — Month: 4 — Day: 15 — Year: 16

INT'L

16. International Shipments ☐ Import to U.S. ☐ Export from U.S. Port of entry/exit:
Transporter signature (for exports only): Date leaving U.S.:

TRANSPORTER

17. Transporter Acknowledgment of Receipt of Materials

Transporter 1 Printed/Typed Name: Freddie Lee Williams — Signature: [signature] — Month: 04 — Day: 15 — Year: 16

Transporter 2 Printed/Typed Name — Signature — Month — Day — Year

DESIGNATED FACILITY

18. Discrepancy

18a. Discrepancy Indication Space ☐ Quantity ☐ Type ☐ Residue ☐ Partial Rejection ☐ Full Rejection

Manifest Reference Number:

18b. Alternate Facility (or Generator) — U.S. EPA ID Number

Facility's Phone:

18c. Signature of Alternate Facility (or Generator) — Month — Day — Year

19. Hazardous Waste Report Management Method Codes (i.e., codes for hazardous waste treatment, disposal, and recycling systems)

1.	2.	3.	4.

20. Designated Facility Owner or Operator: Certification of receipt of hazardous materials covered by the manifest except as noted in Item 18a

Printed/Typed Name — Signature — Month — Day — Year

EPA Form 8700-22 (Rev. 3-05) Previous editions are obsolete.

GENERATOR'S INITIAL COPY

CWM

Please print or type. (Form designed for use on elite (12-pitch) typewriter.) Form Approved. OMB No. 2050-0039

UNIFORM HAZARDOUS WASTE MANIFEST

1. Generator ID Number: EXEMPT
2. Page 1 of
3. Emergency Response Phone
4. Manifest Tracking Number: 002916272 GBF

GENERATOR

5. Generator's Name and Mailing Address
SOLUTIA, INC - ANNISTON PCB SITE
702 CLYDESDALE AVE
ANNISTON AL 36201
Generator's Phone: (256)807-1187

Generator's Site Address (if different than mailing address)
ANNISTON PCB SITE
0 PARKWIN
ANNISTON AL 36201

6. Transporter 1 Company Name — U.S. EPA ID Number

7. Transporter 2 Company Name — U.S. EPA ID Number

8. Designated Facility Name and Site Address — U.S. EPA ID Number
CHEMICAL WASTE MANAGEMENT, INC.
HIGHWAY 17 NORTH, MILE MARKER 183
EMELLE AL 35459
Facility's Phone: (205)652-9721
ALD000622464

9a. HM	9b. U.S. DOT Description (including Proper Shipping Name, Hazard Class, ID Number, and Packing Group (if any))	10. Containers No.	10. Containers Type	11. Total Quantity	12. Unit Wt./Vol.	13. Waste Codes
X	1. UN3432,RQ,POLYCHLORINATED BIPHENYLS,SOLID,9,III CM9879	001	CM	18000	K	
	2.					
	3.					
	4.					

14. Special Handling Instructions and Additional Information
1. CM9879 ERG-171 PO#: [illegible] OSD: 5/2/16 Box 891

ERI PROVIDER: CHEMTREC (CONTRACT CCN24117)

15. **GENERATOR'S/OFFEROR'S CERTIFICATION:** I hereby declare that the contents of this consignment are fully and accurately described above by the proper shipping name, and are classified, packaged, marked and labeled/placarded, and are in all respects in proper condition for transport according to applicable international and national governmental regulations. If export shipment and I am the Primary Exporter, I certify that the contents of this consignment conform to the terms of the attached EPA Acknowledgment of Consent.
I certify that the waste minimization statement identified in 40 CFR 262.27(a) (if I am a large quantity generator) or (b) (if I am a small quantity generator) is true.

Generator's/Offeror's Printed/Typed Name: DONN WILLIAMS — Signature: [signature] — Month: 5 — Day: 27 — Year: 16

INT'L

16. International Shipments ☐ Import to U.S. ☐ Export from U.S. Port of entry/exit:
Transporter signature (for exports only): Date leaving U.S.:

TRANSPORTER

17. Transporter Acknowledgment of Receipt of Materials

Transporter 1 Printed/Typed Name: Randy Gunter — Signature: [signature] — Month: 5 — Day: 27 — Year: 16

Transporter 2 Printed/Typed Name — Signature — Month — Day — Year

DESIGNATED FACILITY

18. Discrepancy

18a. Discrepancy Indication Space ☐ Quantity ☐ Type ☐ Residue ☐ Partial Rejection ☐ Full Rejection

Manifest Reference Number:

18b. Alternate Facility (or Generator) — U.S. EPA ID Number

Facility's Phone:

18c. Signature of Alternate Facility (or Generator) — Month — Day — Year

19. Hazardous Waste Report Management Method Codes (i.e., codes for hazardous waste treatment, disposal, and recycling systems)

1.	2.	3.	4.

20. Designated Facility Owner or Operator: Certification of receipt of hazardous materials covered by the manifest except as noted in Item 18a

Printed/Typed Name — Signature — Month — Day — Year

EPA Form 8700-22 (Rev. 3-05) Previous editions are obsolete.

GENERATOR'S INITIAL COPY

CWMI

Please print or type. (Form designed for use on elite (12-pitch) typewriter.)

Form Approved. OMB No. 2050-0039

UNIFORM HAZARDOUS WASTE MANIFEST

1. Generator ID Number: EXEMPT
2. Page 1 of 1
3. Emergency Response Phone:
4. Manifest Tracking Number: 002916274 GBF

5. Generator's Name and Mailing Address:
SOLUTIA, INC - ANNISTON PCB SITE
702 CLYDESDALE AVE
ANNISTON AL 36201
Generator's Phone: (601)807-1187

Generator's Site Address (if different than mailing address):
ANNISTON PCB SITE
0 PARKWIN
ANNISTON AL 36201

6. Transporter 1 Company Name: Robbie D Woods INC
U.S. EPA ID Number: MCU 001135591

7. Transporter 2 Company Name:
U.S. EPA ID Number:

8. Designated Facility Name and Site Address:
CHEMICAL WASTE MANAGEMENT, INC.
HIGHWAY 17 NORTH, MILE MARKER 163
EMELLE AL 35459
Facility's Phone: (205)652-9721
U.S. EPA ID Number: ALD000622464

9a. HM	9b. U.S. DOT Description (including Proper Shipping Name, Hazard Class, ID Number, and Packing Group (if any))	10. Containers No.	10. Containers Type	11. Total Quantity	12. Unit Wt./Vol.	13. Waste Codes
X	1. UN3432,RQ,POLYCHLORINATED BIPHENYLS,SOLID,9,III CM9879	001	CM	18000	K	
	2.					
	3.					
	4.					

14. Special Handling Instructions and Additional Information
1. CM9879 ERG-171 PO#: 42557866 OSD: 8-1-16
ERI PROVIDER: CHEMTREC (CONTRACT CCN24117)
@ Groundwater

15. **GENERATOR'S/OFFEROR'S CERTIFICATION:** I hereby declare that the contents of this consignment are fully and accurately described above by the proper shipping name, and are classified, packaged, marked and labeled/placarded, and are in all respects in proper condition for transport according to applicable international and national governmental regulations. If export shipment and I am the Primary Exporter, I certify that the contents of this consignment conform to the terms of the attached EPA Acknowledgment of Consent.
I certify that the waste minimization statement identified in 40 CFR 262.27(a) (if I am a large quantity generator) or (b) (if I am a small quantity generator) is true.

Generator's/Offeror's Printed/Typed Name: DONN WILLIAMS
Signature: D Williams
Month 8 Day 18 Year 16

16. International Shipments ☐ Import to U.S. ☐ Export from U.S. Port of entry/exit:
Transporter signature (for exports only): Date leaving U.S.:

17. Transporter Acknowledgment of Receipt of Materials
Transporter 1 Printed/Typed Name: Tony Charles Moore S.
Signature: Tony Charles Moore
Month 08 Day 18 Year 16
Transporter 2 Printed/Typed Name:
Signature:
Month Day Year

18. Discrepancy
18a. Discrepancy Indication Space ☐ Quantity ☐ Type ☐ Residue ☐ Partial Rejection ☐ Full Rejection
Manifest Reference Number:
18b. Alternate Facility (or Generator)
U.S. EPA ID Number
Facility's Phone:
18c. Signature of Alternate Facility (or Generator)
Month Day Year

19. Hazardous Waste Report Management Method Codes (i.e., codes for hazardous waste treatment, disposal, and recycling systems)
1. 2. 3. 4.

20. Designated Facility Owner or Operator: Certification of receipt of hazardous materials covered by the manifest except as noted in Item 18a
Printed/Typed Name
Signature
Month Day Year

GENERATOR / INT'L / TRANSPORTER / DESIGNATED FACILITY

EPA Form 8700-22 (Rev. 3-05) Previous editions are obsolete.

GENERATOR'S INITIAL COPY

CWM

Please print or type. (Form designed for use on elite (12-pitch) typewriter.) Form Approved. OMB No. 2050-0039

UNIFORM HAZARDOUS WASTE MANIFEST

1. Generator ID Number	2. Page 1 of	3. Emergency Response Phone	4. Manifest Tracking Number
EXEMPT	1		002916281 GBF

GENERATOR

5. Generator's Name and Mailing Address
SOLUTIA, INC - ANNISTON PCB SITE
702 CLYDESDALE AVE
ANNISTON AL 36201
Generator's Phone: (001)307-1187

Generator's Site Address (if different than mailing address)
ANNISTON PCB SITE
0 PARKWIN
ANNISTON AL 36201

6. Transporter 1 Company Name: Kahle D Lmo D — U.S. EPA ID Number: ALD 0 4 7 B 8 9 1

7. Transporter 2 Company Name — U.S. EPA ID Number

8. Designated Facility Name and Site Address
CHEMICAL WASTE MANAGEMENT, INC.
HIGHWAY 17 NORTH, MILE MARKER 163
EMELLE AL 35459
Facility's Phone: (205)652-9721 — U.S. EPA ID Number: ALD000622484

9a. HM	9b. U.S. DOT Description (including Proper Shipping Name, Hazard Class, ID Number, and Packing Group (if any))	10. Containers No.	10. Containers Type	11. Total Quantity	12. Unit Wt./Vol.	13. Waste Codes
X	1. UN3432,RQ,POLYCHLORINATED BIPHENYLS,SOLID,9,III CM9879	001	CM	18000	K	
	2.					
	3.					
	4.					

14. Special Handling Instructions and Additional Information
1. CM9879 ERG-171 PO#: 4055781 OSD: 5/3/16 Box 2136

ERI PROVIDER: CHEMTREC (CONTRACT CCN24117)

15. **GENERATOR'S/OFFEROR'S CERTIFICATION:** I hereby declare that the contents of this consignment are fully and accurately described above by the proper shipping name, and are classified, packaged, marked and labeled/placarded, and are in all respects in proper condition for transport according to applicable international and national governmental regulations. If export shipment and I am the Primary Exporter, I certify that the contents of this consignment conform to the terms of the attached EPA Acknowledgment of Consent.
I certify that the waste minimization statement identified in 40 CFR 262.27(a) (if I am a large quantity generator) or (b) (if I am a small quantity generator) is true.

Generator's/Offeror's Printed/Typed Name: DONN WILLIAMS — Signature: DW — Month: 5 Day: 3 Year: 16

INT'L

16. International Shipments ☐ Import to U.S. ☐ Export from U.S. Port of entry/exit:
Transporter signature (for exports only): Date leaving U.S.:

TRANSPORTER

17. Transporter Acknowledgment of Receipt of Materials

Transporter 1 Printed/Typed Name: TIM CARTER — Signature — Month: 5 Day: 3 Year: 16

Transporter 2 Printed/Typed Name — Signature — Month — Day — Year

DESIGNATED FACILITY

18. Discrepancy

18a. Discrepancy Indication Space ☐ Quantity ☐ Type ☐ Residue ☐ Partial Rejection ☐ Full Rejection

Manifest Reference Number:

18b. Alternate Facility (or Generator) — U.S. EPA ID Number

Facility's Phone:

18c. Signature of Alternate Facility (or Generator) — Month — Day — Year

19. Hazardous Waste Report Management Method Codes (i.e., codes for hazardous waste treatment, disposal, and recycling systems)

1.	2.	3.	4.

20. Designated Facility Owner or Operator: Certification of receipt of hazardous materials covered by the manifest except as noted in Item 18a

Printed/Typed Name — Signature — Month — Day — Year

EPA Form 8700-22 (Rev. 3-05) Previous editions are obsolete.

GENERATOR'S INITIAL COPY

Load #0121 11162 Box # 738

CWM

Please print or type. (Form designed for use on elite (12-pitch) typewriter.) Form Approved. OMB No. 2050-0039

UNIFORM HAZARDOUS WASTE MANIFEST	1. Generator ID Number	2. Page 1 of	3. Emergency Response Phone	4. Manifest Tracking Number
	EXEMPT			002916282 GBF

GENERATOR

5. Generator's Name and Mailing Address

SOLUTIA, INC - ANNISTON PCB SITE
702 CLYDESDALE AVE
ANNISTON AL 36201
Generator's Phone: (601)607-1187

Generator's Site Address (if different than mailing address)

ANNISTON PCB SITE
0 PARKWIN
ANNISTON AL 36201

6. Transporter 1 Company Name: Robbie D Wood Inc — U.S. EPA ID Number: ALD067388891

7. Transporter 2 Company Name — U.S. EPA ID Number:

8. Designated Facility Name and Site Address — U.S. EPA ID Number

CHEMICAL WASTE MANAGEMENT, INC.
HIGHWAY 17 NORTH, MILE MARKER 163
EMELLE AL 35459
Facility's Phone: (205)652-9721

ALD000622464

9a. HM	9b. U.S. DOT Description (including Proper Shipping Name, Hazard Class, ID Number, and Packing Group (if any))	10. Containers No.	10. Containers Type	11. Total Quantity	12. Unit Wt./Vol.	13. Waste Codes
X	1. UN3432,RQ,POLYCHLORINATED BIPHENYLS,SOLID,9,III CM9879	001	CM	18000	K	
	2.					
	3.					
	4.					

14. Special Handling Instructions and Additional Information
1. CM9879 ERG-171 PO#: 4255186.1 OSD: 4-12-16

ERI PROVIDER: CHEMTREC (CONTRACT CCN24117)

15. GENERATOR'S/OFFEROR'S CERTIFICATION: I hereby declare that the contents of this consignment are fully and accurately described above by the proper shipping name, and are classified, packaged, marked and labeled/placarded, and are in all respects in proper condition for transport according to applicable international and national governmental regulations. If export shipment and I am the Primary Exporter, I certify that the contents of this consignment conform to the terms of the attached EPA Acknowledgment of Consent.
I certify that the waste minimization statement identified in 40 CFR 262.27(a) (if I am a large quantity generator) or (b) (if I am a small quantity generator) is true.

Generator's/Offeror's Printed/Typed Name: DONN WILLIAMS — Signature: [signature] — Month: 04 Day: 12 Year: 16

INT'L

16. International Shipments ☐ Import to U.S. ☐ Export from U.S. Port of entry/exit:
Transporter signature (for exports only): Date leaving U.S.:

TRANSPORTER

17. Transporter Acknowledgment of Receipt of Materials

Transporter 1 Printed/Typed Name: Freddie Lee Williams — Signature: [signature] — Month: 04 Day: 12 Year: 16

Transporter 2 Printed/Typed Name — Signature — Month Day Year

DESIGNATED FACILITY

18. Discrepancy

18a. Discrepancy Indication Space ☐ Quantity ☐ Type ☐ Residue ☐ Partial Rejection ☐ Full Rejection

Manifest Reference Number:

18b. Alternate Facility (or Generator) — U.S. EPA ID Number

Facility's Phone:

18c. Signature of Alternate Facility (or Generator) — Month Day Year

19. Hazardous Waste Report Management Method Codes (i.e., codes for hazardous waste treatment, disposal, and recycling systems)

1.	2.	3.	4.

20. Designated Facility Owner or Operator: Certification of receipt of hazardous materials covered by the manifest except as noted in Item 18a

Printed/Typed Name — Signature — Month Day Year

EPA Form 8700-22 (Rev. 3-05) Previous editions are obsolete.

GENERATOR'S INITIAL COPY

Load # 121116

CWM

Please print or type. (Form designed for use on elite (12-pitch) typewriter.)

Form Approved. OMB No. 2050-0039

UNIFORM HAZARDOUS WASTE MANIFEST

1. Generator ID Number: EXEMPT

2. Page 1 of

3. Emergency Response Phone

4. Manifest Tracking Number: 002916283 GBF

GENERATOR

5. Generator's Name and Mailing Address

SOLUTIA, INC - ANNISTON PCB SITE
702 CLYDESDALE AVE
ANNISTON AL 36201
Generator's Phone: (001)807-1187

Generator's Site Address (if different than mailing address)

ANNISTON PCB SITE
0 PARKWIN
ANNISTON AL 36201

6. Transporter 1 Company Name: Rabbit Hound Inc.

U.S. EPA ID Number: ALD067138891

7. Transporter 2 Company Name

U.S. EPA ID Number

8. Designated Facility Name and Site Address

CHEMICAL WASTE MANAGEMENT, INC.
HIGHWAY 17 NORTH, MILE MARKER 163
EMELLE AL 35459

Facility's Phone: (205)652-9721

U.S. EPA ID Number: ALD000622484

9a. HM	9b. U.S. DOT Description (including Proper Shipping Name, Hazard Class, ID Number, and Packing Group (if any))	10. Containers No.	10. Containers Type	11. Total Quantity	12. Unit Wt./Vol.	13. Waste Codes
X	1. UN3432,RQ,POLYCHLORINATED BIPHENYLS,SOLID,9,III CM9879	001	CM	18000	K	
	2.					
	3.					
	4.					

14. Special Handling Instructions and Additional Information

1. CM9879 ERG-171 PO#: 425578 OSD: 4/12/16 Box 779

ERI PROVIDER: CHEMTREC (CONTRACT CCN24117)

15. GENERATOR'S/OFFEROR'S CERTIFICATION: I hereby declare that the contents of this consignment are fully and accurately described above by the proper shipping name, and are classified, packaged, marked and labeled/placarded, and are in all respects in proper condition for transport according to applicable international and national governmental regulations. If export shipment and I am the Primary Exporter, I certify that the contents of this consignment conform to the terms of the attached EPA Acknowledgment of Consent.
I certify that the waste minimization statement identified in 40 CFR 262.27(a) (if I am a large quantity generator) or (b) (if I am a small quantity generator) is true.

Generator's/Offeror's Printed/Typed Name: DONN WILLIAMS

Signature: DWilliams

Month: 4 Day: 12 Year: 16

INT'L

16. International Shipments ☐ Import to U.S. ☐ Export from U.S. Port of entry/exit:

Transporter signature (for exports only): Date leaving U.S.:

TRANSPORTER

17. Transporter Acknowledgment of Receipt of Materials

Transporter 1 Printed/Typed Name: Freddie Lee Williams

Signature: Freddie Lee Williams

Month: 04 Day: 12 Year: 16

Transporter 2 Printed/Typed Name

Signature

Month: Day: Year:

DESIGNATED FACILITY

18. Discrepancy

18a. Discrepancy Indication Space ☐ Quantity ☐ Type ☐ Residue ☐ Partial Rejection ☐ Full Rejection

Manifest Reference Number:

18b. Alternate Facility (or Generator)

U.S. EPA ID Number

Facility's Phone:

18c. Signature of Alternate Facility (or Generator)

Month: Day: Year:

19. Hazardous Waste Report Management Method Codes (i.e., codes for hazardous waste treatment, disposal, and recycling systems)

1. 2. 3. 4.

20. Designated Facility Owner or Operator: Certification of receipt of hazardous materials covered by the manifest except as noted in Item 18a

Printed/Typed Name

Signature

Month: Day: Year:

EPA Form 8700-22 (Rev. 3-05) Previous editions are obsolete.

GENERATOR'S INITIAL COPY

7503 CWM

Please print or type. (Form designed for use on elite (12-pitch) typewriter.) Form Approved. OMB No. 2050-0039

UNIFORM HAZARDOUS WASTE MANIFEST	1. Generator ID Number	2. Page 1 of	3. Emergency Response Phone	4. Manifest Tracking Number
	EXEMPT			002916284 GBF

GENERATOR

5. Generator's Name and Mailing Address
SOLUTIA, INC - ANNISTON PCB SITE
702 CLYDESDALE AVE
ANNISTON AL 36201
Generator's Phone: (256)847-1187

Generator's Site Address (if different than mailing address)
ANNISTON PCB SITE
0 PARKWIN
ANNISTON AL 36201

6. Transporter 1 Company Name — U.S. EPA ID Number

7. Transporter 2 Company Name — U.S. EPA ID Number

8. Designated Facility Name and Site Address — U.S. EPA ID Number
CHEMICAL WASTE MANAGEMENT, INC.
HIGHWAY 17 NORTH, MILE MARKER 163
EMELLE AL 35459
Facility's Phone: (205)652-9721
ALD000622464

9a. HM	9b. U.S. DOT Description (including Proper Shipping Name, Hazard Class, ID Number, and Packing Group (if any))	10. Containers No.	10. Containers Type	11. Total Quantity	12. Unit Wt./Vol.	13. Waste Codes
X	1. UN3432,RQ,POLYCHLORINATED BIPHENYLS,SOLID,9,III CM9879	001	CM	18000	K	
	2.					
	3.					
	4.					

14. Special Handling Instructions and Additional Information
1. CM9879 ERG-171 PO#: 41557 OSD: 4/15/16 Box 25153

ERI PROVIDER: CHEMTREC (CONTRACT CCN24117)

15. GENERATOR'S/OFFEROR'S CERTIFICATION: I hereby declare that the contents of this consignment are fully and accurately described above by the proper shipping name, and are classified, packaged, marked and labeled/placarded, and are in all respects in proper condition for transport according to applicable international and national governmental regulations. If export shipment and I am the Primary Exporter, I certify that the contents of this consignment conform to the terms of the attached EPA Acknowledgment of Consent.
I certify that the waste minimization statement identified in 40 CFR 262.27(a) (if I am a large quantity generator) or (b) (if I am a small quantity generator) is true.

Generator's/Offeror's Printed/Typed Name: DONN WILLIAMS — Signature — Month: 4 Day: 15 Year: 16

INT'L

16. International Shipments ☐ Import to U.S. ☐ Export from U.S. Port of entry/exit:
Transporter signature (for exports only): Date leaving U.S.:

TRANSPORTER

17. Transporter Acknowledgment of Receipt of Materials

Transporter 1 Printed/Typed Name: FLOYD CARTER — Signature — Month: 4 Day: 15 Year: 16

Transporter 2 Printed/Typed Name — Signature — Month — Day — Year

DESIGNATED FACILITY

18. Discrepancy

18a. Discrepancy Indication Space ☐ Quantity ☐ Type ☐ Residue ☐ Partial Rejection ☐ Full Rejection

Manifest Reference Number:

18b. Alternate Facility (or Generator) — U.S. EPA ID Number

Facility's Phone:

18c. Signature of Alternate Facility (or Generator) — Month — Day — Year

19. Hazardous Waste Report Management Method Codes (i.e., codes for hazardous waste treatment, disposal, and recycling systems)

1.	2.	3.	4.

20. Designated Facility Owner or Operator: Certification of receipt of hazardous materials covered by the manifest except as noted in Item 18a

Printed/Typed Name — Signature — Month — Day — Year

EPA Form 8700-22 (Rev. 3-05) Previous editions are obsolete.

GENERATOR'S INITIAL COPY

Weight 5-5-16 K

Waste Management
Emelle Facility
WEIGHED ON CARDINAL SCALES

438621

GROSS 57620 lb

11:30AM 04/21/2016

GROSS

TARE

NET

GROSS 35760 lb

02:16PM 04/21/2016

Customer: Anniston PCB Site

Transporter: BDW 21,860 ~ 9,916 K

Truck #: 204 Trailer #: 25153

Receipt #: 513656 Manifest #: 002916284 GBF

DIGITAL WEIGHT INDICATOR & PRINTER

WEIGHED BY JB

FORM 510

CWMI

Please print or type. (Form designed for use on elite (12-pitch) typewriter.)

Form Approved. OMB No. 2050-0039

UNIFORM HAZARDOUS WASTE MANIFEST

1. Generator ID Number: EXEMPT
2. Page 1 of 1
3. Emergency Response Phone: 615 467 4100
4. Manifest Tracking Number: 002916285 GBF

GENERATOR

5. Generator's Name and Mailing Address
SOLUTIA, INC - ANNISTON PCB SITE
702 CLYDESDALE AVE
ANNISTON AL 36201
Generator's Phone: (601)807-1107

Generator's Site Address (if different than mailing address)
ANNISTON PCB SITE
0 PARKWIN
ANNISTON AL 36201

6. Transporter 1 Company Name: Collie D. Ward Inc
U.S. EPA ID Number: ALSOA13 8891

7. Transporter 2 Company Name
U.S. EPA ID Number

8. Designated Facility Name and Site Address
CHEMICAL WASTE MANAGEMENT, INC.
HIGHWAY 17 NORTH, MILE MARKER 163
EMELLE AL 35459
Facility's Phone: (205)652-9721
U.S. EPA ID Number: ALD000622464

9a. HM	9b. U.S. DOT Description (including Proper Shipping Name, Hazard Class, ID Number, and Packing Group (if any))	10. Containers No.	10. Containers Type	11. Total Quantity	12. Unit Wt./Vol.	13. Waste Codes
X	1. UN3432,RQ,POLYCHLORINATED BIPHENYLS,SOLID,9,III CM9879	001	CM	18000	K	
	2.					
	3.					
	4.					

14. Special Handling Instructions and Additional Information
1. CM9879 ERG-171 PO#: 4235186 OSD: 3/2/16 Box 2166
ERI PROVIDER: CHEMTREC (CONTRACT CCN24117)

15. **GENERATOR'S/OFFEROR'S CERTIFICATION:** I hereby declare that the contents of this consignment are fully and accurately described above by the proper shipping name, and are classified, packaged, marked and labeled/placarded, and are in all respects in proper condition for transport according to applicable international and national governmental regulations. If export shipment and I am the Primary Exporter, I certify that the contents of this consignment conform to the terms of the attached EPA Acknowledgment of Consent.
I certify that the waste minimization statement identified in 40 CFR 262.27(a) (if I am a large quantity generator) or (b) (if I am a small quantity generator) is true.

Generator's/Offeror's Printed/Typed Name: DONN WILLIAMS
Signature: [signature]
Month: 3 Day: 2 Year: 16

INT'L

16. International Shipments ☐ Import to U.S. ☐ Export from U.S. Port of entry/exit:
Transporter signature (for exports only): Date leaving U.S.:

TRANSPORTER

17. Transporter Acknowledgment of Receipt of Materials

Transporter 1 Printed/Typed Name: Larry Counter
Signature: [signature]
Month: 3 Day: 2 Year: 16

Transporter 2 Printed/Typed Name
Signature
Month Day Year

DESIGNATED FACILITY

18. Discrepancy

18a. Discrepancy Indication Space ☐ Quantity ☐ Type ☐ Residue ☐ Partial Rejection ☐ Full Rejection
Manifest Reference Number:

18b. Alternate Facility (or Generator)
U.S. EPA ID Number
Facility's Phone:

18c. Signature of Alternate Facility (or Generator)
Month Day Year

19. Hazardous Waste Report Management Method Codes (i.e., codes for hazardous waste treatment, disposal, and recycling systems)

1.	2.	3.	4.

20. Designated Facility Owner or Operator: Certification of receipt of hazardous materials covered by the manifest except as noted in Item 18a

Printed/Typed Name
Signature
Month Day Year

EPA Form 8700-22 (Rev. 3-05) Previous editions are obsolete.

CWMI

Please print or type. (Form designed for use on elite (12-pitch) typewriter.)

Form Approved. OMB No. 2050-0039

UNIFORM HAZARDOUS WASTE MANIFEST

1. Generator ID Number: EXEMPT

2. Page 1 of

3. Emergency Response Phone: (601) 205-1167

4. Manifest Tracking Number: 002916286 GBF

GENERATOR

5. Generator's Name and Mailing Address:
SOLUTIA, INC - ANNISTON PCB SITE
702 CLYDESDALE AVE
ANNISTON AL 36201
Generator's Phone: (601)907-1167

Generator's Site Address (if different than mailing address):
ANNISTON PCB SITE
0 PARKWIN
ANNISTON AL 36201

6. Transporter 1 Company Name | U.S. EPA ID Number

7. Transporter 2 Company Name | U.S. EPA ID Number

8. Designated Facility Name and Site Address | U.S. EPA ID Number
CHEMICAL WASTE MANAGEMENT, INC.
HIGHWAY 17 NORTH, MILE MARKER 163
EMELLE AL 35459
Facility's Phone: (205)652-9721
ALD000622464

9a. HM	9b. U.S. DOT Description (including Proper Shipping Name, Hazard Class, ID Number, and Packing Group (if any))	10. Containers No.	10. Containers Type	11. Total Quantity	12. Unit Wt./Vol.	13. Waste Codes
X	1. UN3432,RQ,POLYCHLORINATED BIPHENYLS,SOLID,9,III CM9879	001	CM	18000	K	
	2.					
	3.					
	4.					

14. Special Handling Instructions and Additional Information
1. CM9879 ERG-171 PO#: 42.55786 OSD: 3/1/16
Box 25175
ERI PROVIDER: CHEMTREC (CONTRACT CCN24117)

15. **GENERATOR'S/OFFEROR'S CERTIFICATION:** I hereby declare that the contents of this consignment are fully and accurately described above by the proper shipping name, and are classified, packaged, marked and labeled/placarded, and are in all respects in proper condition for transport according to applicable international and national governmental regulations. If export shipment and I am the Primary Exporter, I certify that the contents of this consignment conform to the terms of the attached EPA Acknowledgment of Consent.
I certify that the waste minimization statement identified in 40 CFR 262.27(a) (if I am a large quantity generator) or (b) (if I am a small quantity generator) is true.

Generator's/Offeror's Printed/Typed Name: DONN WILLIAMS | Signature | Month: 3 | Day: 1 | Year: 16

INT'L

16. International Shipments ☐ Import to U.S. ☐ Export from U.S. Port of entry/exit:
Transporter signature (for exports only): Date leaving U.S.:

TRANSPORTER

17. Transporter Acknowledgment of Receipt of Materials

Transporter 1 Printed/Typed Name | Signature | Month | Day: 1 | Year: 16

Transporter 2 Printed/Typed Name | Signature | Month | Day | Year

DESIGNATED FACILITY

18. Discrepancy

18a. Discrepancy Indication Space ☐ Quantity ☐ Type ☐ Residue ☐ Partial Rejection ☐ Full Rejection

Manifest Reference Number:

18b. Alternate Facility (or Generator) | U.S. EPA ID Number

Facility's Phone:

18c. Signature of Alternate Facility (or Generator) | Month | Day | Year

19. Hazardous Waste Report Management Method Codes (i.e., codes for hazardous waste treatment, disposal, and recycling systems)

1.	2.	3.	4.

20. Designated Facility Owner or Operator: Certification of receipt of hazardous materials covered by the manifest except as noted in Item 18a

Printed/Typed Name | Signature | Month | Day | Year

EPA Form 8700-22 (Rev. 3-05) Previous editions are obsolete.

GENERATOR'S INITIAL COPY

CWMI

Please print or type. (Form designed for use on elite (12-pitch) typewriter.) Form Approved. OMB No. 2050-0039

UNIFORM HAZARDOUS WASTE MANIFEST

1. Generator ID Number: EXEMPT
2. Page 1 of 1
3. Emergency Response Phone:
4. Manifest Tracking Number: 002916287 GBF

5. Generator's Name and Mailing Address:
SOLUTIA, INC - ANNISTON PCB SITE
702 CLYDESDALE AVE
ANNISTON AL 36201
Generator's Phone: (601)807-1187

Generator's Site Address (if different than mailing address):
ANNISTON PCB SITE
0 PARKWIN
ANNISTON AL 36201

6. Transporter 1 Company Name: Adobie D Wooding
U.S. EPA ID Number: 00713559

7. Transporter 2 Company Name:
U.S. EPA ID Number:

8. Designated Facility Name and Site Address:
CHEMICAL WASTE MANAGEMENT, INC.
HIGHWAY 17 NORTH, MILE MARKER 163
EMELLE AL 35459
Facility's Phone: (205)652-9721
U.S. EPA ID Number: ALD000622464

9a. HM	9b. U.S. DOT Description (including Proper Shipping Name, Hazard Class, ID Number, and Packing Group (if any))	10. Containers No.	Type	11. Total Quantity	12. Unit Wt./Vol.	13. Waste Codes
X	1. UN3432,RQ,POLYCHLORINATED BIPHENYLS,SOLID,9,III CM9879	001	CM	18000	K	
	2.					
	3. Box					
	4. 25171					

14. Special Handling Instructions and Additional Information
1. CM9879 ERG-171 PO#: 42557866 OSD: 3/4/2016
ERI PROVIDER: CHEMTREC (CONTRACT CCN24117)

15. **GENERATOR'S/OFFEROR'S CERTIFICATION:** I hereby declare that the contents of this consignment are fully and accurately described above by the proper shipping name, and are classified, packaged, marked and labeled/placarded, and are in all respects in proper condition for transport according to applicable international and national governmental regulations. If export shipment and I am the Primary Exporter, I certify that the contents of this consignment conform to the terms of the attached EPA Acknowledgment of Consent.
I certify that the waste minimization statement identified in 40 CFR 262.27(a) (if I am a large quantity generator) or (b) (if I am a small quantity generator) is true.

Generator's/Offeror's Printed/Typed Name: DONN WILLIAMS
Signature: [signature]
Month 3 Day 4 Year 16

16. International Shipments ☐ Import to U.S. ☐ Export from U.S. Port of entry/exit:
Transporter signature (for exports only): Date leaving U.S.:

17. Transporter Acknowledgment of Receipt of Materials
Transporter 1 Printed/Typed Name: Tony Charles Moore Sr
Signature: [signature]
Month 03 Day 04 Year 16
Transporter 2 Printed/Typed Name:
Signature:
Month Day Year

18. Discrepancy
18a. Discrepancy Indication Space ☐ Quantity ☐ Type ☐ Residue ☐ Partial Rejection ☐ Full Rejection
Manifest Reference Number:

18b. Alternate Facility (or Generator)
U.S. EPA ID Number:
Facility's Phone:

18c. Signature of Alternate Facility (or Generator)
Month Day Year

19. Hazardous Waste Report Management Method Codes (i.e., codes for hazardous waste treatment, disposal, and recycling systems)
1. 2. 3. 4.

20. Designated Facility Owner or Operator: Certification of receipt of hazardous materials covered by the manifest except as noted in Item 18a
Printed/Typed Name
Signature
Month Day Year

GENERATOR / INT'L / TRANSPORTER / DESIGNATED FACILITY

EPA Form 8700-22 (Rev. 3-05) Previous editions are obsolete.

GENERATOR'S INITIAL COPY

CWMI

Please print or type. (Form designed for use on elite (12-pitch) typewriter.)

Form Approved. OMB No. 2050-0039

UNIFORM HAZARDOUS WASTE MANIFEST

1. Generator ID Number: EXEMPT
2. Page 1 of
3. Emergency Response Phone
4. Manifest Tracking Number: 002916291 GBF

5. Generator's Name and Mailing Address
SOLUTIA, INC - ANNISTON PCB SITE
702 CLYDESDALE AVE
ANNISTON AL 36201
Generator's Phone: (601)807-1187

Generator's Site Address (if different than mailing address)
ANNISTON PCB SITE
0 PARKWIN
ANNISTON AL 36201

6. Transporter 1 Company Name: Kelly D. Woo
U.S. EPA ID Number: ALD078360971

7. Transporter 2 Company Name
U.S. EPA ID Number

8. Designated Facility Name and Site Address
CHEMICAL WASTE MANAGEMENT, INC.
HIGHWAY 17 NORTH, MILE MARKER 163
EMELLE AL 35459
Facility's Phone: (205)652-9721
U.S. EPA ID Number: ALD000622464

GENERATOR

9a. HM	9b. U.S. DOT Description (including Proper Shipping Name, Hazard Class, ID Number, and Packing Group (if any))	10. Containers No.	10. Containers Type	11. Total Quantity	12. Unit Wt./Vol.	13. Waste Codes
X	1. UN3432,RQ,POLYCHLORINATED BIPHENYLS,SOLID,9,III CM9879	001	CM	18000	K	
	2.					
	3.					
	4.					

14. Special Handling Instructions and Additional Information
1. CM9879 ERG-171 PO#: 4255786 OSD: 2-11-16 BOX 2622
ERI PROVIDER: CHEMTREC (CONTRACT CCN24117)

15. **GENERATOR'S/OFFEROR'S CERTIFICATION:** I hereby declare that the contents of this consignment are fully and accurately described above by the proper shipping name, and are classified, packaged, marked and labeled/placarded, and are in all respects in proper condition for transport according to applicable international and national governmental regulations. If export shipment and I am the Primary Exporter, I certify that the contents of this consignment conform to the terms of the attached EPA Acknowledgment of Consent.
I certify that the waste minimization statement identified in 40 CFR 262.27(a) (if I am a large quantity generator) or (b) (if I am a small quantity generator) is true.

Generator's/Offeror's Printed/Typed Name: DONN WILLIAMS
Signature
Month: 2 Day: 11 Year: 16

INT'L

16. International Shipments ☐ Import to U.S. ☐ Export from U.S. Port of entry/exit:
Transporter signature (for exports only): Date leaving U.S.:

TRANSPORTER

17. Transporter Acknowledgment of Receipt of Materials

Transporter 1 Printed/Typed Name: Kelly Wilson
Signature
Month: 2 Day: 11 Year: 16

Transporter 2 Printed/Typed Name
Signature
Month Day Year

DESIGNATED FACILITY

18. Discrepancy

18a. Discrepancy Indication Space ☐ Quantity ☐ Type ☐ Residue ☐ Partial Rejection ☐ Full Rejection
Manifest Reference Number:

18b. Alternate Facility (or Generator)
U.S. EPA ID Number
Facility's Phone:

18c. Signature of Alternate Facility (or Generator)
Month Day Year

19. Hazardous Waste Report Management Method Codes (i.e., codes for hazardous waste treatment, disposal, and recycling systems)

1.	2.	3.	4.

20. Designated Facility Owner or Operator: Certification of receipt of hazardous materials covered by the manifest except as noted in Item 18a

Printed/Typed Name
Signature
Month Day Year

EPA Form 8700-22 (Rev. 3-05) Previous editions are obsolete.

GENERATOR'S INITIAL COPY

CWMI

Please print or type. (Form designed for use on elite (12-pitch) typewriter.)

Form Approved. OMB No. 2050-0039

UNIFORM HAZARDOUS WASTE MANIFEST

1. Generator ID Number: EXEMPT
2. Page 1 of
3. Emergency Response Phone:
4. Manifest Tracking Number: 002916292 GBF

GENERATOR

5. Generator's Name and Mailing Address
SOLUTIA, INC - ANNISTON PCB SITE
702 CLYDESDALE AVE
ANNISTON AL 36201
Generator's Phone: (601)607-1187

Generator's Site Address (if different than mailing address)
ANNISTON PCB SITE
0 PARKWIN
ANNISTON AL 36201

6. Transporter 1 Company Name: Robbie D. Wood Inc
U.S. EPA ID Number: ALD061355591

7. Transporter 2 Company Name
U.S. EPA ID Number

8. Designated Facility Name and Site Address
CHEMICAL WASTE MANAGEMENT, INC.
HIGHWAY 17 NORTH, MILE MARKER 163
EMELLE AL 35459
Facility's Phone: (205)652-9721
U.S. EPA ID Number: ALD000622464

9a. HM	9b. U.S. DOT Description (including Proper Shipping Name, Hazard Class, ID Number, and Packing Group (if any))	10. Containers No.	10. Containers Type	11. Total Quantity	12. Unit Wt./Vol.	13. Waste Codes
X	1. UN3432,RQ,POLYCHLORINATED BIPHENYLS,SOLID,9,III CM9879	001	CM	18000	K	
	2.					
	3.					
	4.					

14. Special Handling Instructions and Additional Information
1. CM9879 ERG-171 PO#: 4255786 OSD: 2-11-16 Box B013
ERI PROVIDER: CHEMTREC (CONTRACT CCN24117)

15. **GENERATOR'S/OFFEROR'S CERTIFICATION:** I hereby declare that the contents of this consignment are fully and accurately described above by the proper shipping name, and are classified, packaged, marked and labeled/placarded, and are in all respects in proper condition for transport according to applicable international and national governmental regulations. If export shipment and I am the Primary Exporter, I certify that the contents of this consignment conform to the terms of the attached EPA Acknowledgment of Consent.
I certify that the waste minimization statement identified in 40 CFR 262.27(a) (if I am a large quantity generator) or (b) (if I am a small quantity generator) is true.

Generator's/Offeror's Printed/Typed Name: DONN WILLIAMS
Signature:
Month: 2 Day: 11 Year: 16

INT'L

16. International Shipments ☐ Import to U.S. ☐ Export from U.S. Port of entry/exit:
Transporter signature (for exports only): Date leaving U.S.:

TRANSPORTER

17. Transporter Acknowledgment of Receipt of Materials

Transporter 1 Printed/Typed Name: Randy Gunter
Signature:
Month: 2 Day: 11 Year: 16

Transporter 2 Printed/Typed Name
Signature
Month Day Year

DESIGNATED FACILITY

18. Discrepancy

18a. Discrepancy Indication Space ☐ Quantity ☐ Type ☐ Residue ☐ Partial Rejection ☐ Full Rejection

Manifest Reference Number:

18b. Alternate Facility (or Generator)
U.S. EPA ID Number
Facility's Phone:

18c. Signature of Alternate Facility (or Generator)
Month Day Year

19. Hazardous Waste Report Management Method Codes (i.e., codes for hazardous waste treatment, disposal, and recycling systems)

1.	2.	3.	4.

20. Designated Facility Owner or Operator: Certification of receipt of hazardous materials covered by the manifest except as noted in Item 18a

Printed/Typed Name
Signature
Month Day Year

EPA Form 8700-22 (Rev. 3-05) Previous editions are obsolete.

GENERATOR'S INITIAL COPY

APPENDIX D1.7

PCB Cells

WM
Chemical Waste Managment
P.O. Box 55
36964 Alabama Hwy 17
Emelle, AL 35459-0055
(205)652-9721

Manifest Document Number:

SOLUTIA INC
702 CLYDESDALE AVE

ANNISTON, AL 36201-5328

Attn: DONN WILLIAMS

Site Information

SOLUTIA
702 CLYDESDALE AVE

ANNISTON, AL 36201-5328

CERTIFICATE OF DISPOSAL

Chemical Waste Management, Inc. (ALD000622464) has received PCB material from
SOLUTIA

as described on Hazardous Waste Manifest Number 002666520GBF-1
Waste Management, Inc. hereby certifies that the above described material (excluding PCB liquids, if applicable) was landfilled on the dates shown below, in compliance with State and Federal Regulations.

Under civil and criminal penalties of law for the making or submission of false or fraudulent statements or representation (18 U.S.C. 1001 and 15 U.S.C. 2615), I certify that the information contained in or accompanying this document is true, accurate and complete. As to the identified section(s) of this document for which I cannot personally verify truth and accuracy, I certify as the company official having supervisory responsibility for the persons who, acting under my direct instructions, made the verification that this information is true, accurate and complete.

Al Talbott/am

Al Talbott, Safety Manager
August 29, 2015

OSD	Unique ID	Cont #	Profile	Disposed	Description
8/20/15	002666520GBF-01	1	CM9879	8/25/15	ANNISTON PCB SITE CONSENT DECR

Box 2012

CWMI

Please print or type. (Form designed for use on elite (12-pitch) typewriter.)

Form Approved. OMB No. 2050-0039

UNIFORM HAZARDOUS WASTE MANIFEST

1. Generator ID Number: EXEMPT
2. Page 1 of 1
3. Emergency Response Phone: TR-337-4689
4. Manifest Tracking Number: 002666520 GBF

5. Generator's Name and Mailing Address
SOLUTIA, INC - ANNISTON PCB SITE
702 CLYDESDALE AVE
ANNISTON AL 36201
Generator's Phone: (601)507-1187

Generator's Site Address (if different than mailing address)

6. Transporter 1 Company Name: Robbie D. Wood — U.S. EPA ID Number: AID067138891

7. Transporter 2 Company Name — U.S. EPA ID Number:

8. Designated Facility Name and Site Address
CHEMICAL WASTE MANAGEMENT, INC.
HIGHWAY 17 NORTH, MILE MARKER 163
EMELLE AL 35459
Facility's Phone: (205)652-9721
U.S. EPA ID Number: ALD000622464

9a. HM	9b. U.S. DOT Description (including Proper Shipping Name, Hazard Class, ID Number, and Packing Group (if any))	10. Containers No.	10. Containers Type	11. Total Quantity	12. Unit Wt./Vol.	13. Waste Codes
X	1. UN3432,RQ,POLYCHLORINATED BIPHENYLS,SOLID,9,III CM9879	001	~~DT~~ CM	~~18000~~ 12,138 JB 8/25/15	K	
	2.					
	3.					
	4.					

14. Special Handling Instructions and Additional Information
1. CM9879 ERG-171 POS: 42557866 OSD: 8/20/15
ERI PROVIDER: CHEMTREC (CONTRACT CCN24117) Anita Clark

15. **GENERATOR'S/OFFEROR'S CERTIFICATION:** I hereby declare that the contents of this consignment are fully and accurately described above by the proper shipping name, and are classified, packaged, marked and labeled/placarded, and are in all respects in proper condition for transport according to applicable international and national governmental regulations. If export shipment and I am the Primary Exporter, I certify that the contents of this consignment conform to the terms of the attached EPA Acknowledgment of Consent.
I certify that the waste minimization statement identified in 40 CFR 262.27(a) (if I am a large quantity generator) or (b) (if I am a small quantity generator) is true.

Generator's/Offeror's Printed/Typed Name: DONN WILLIAMS — Signature: D.W. Williams — Month 8 Day 20 Year 15

16. International Shipments ☐ Import to U.S. ☐ Export from U.S. Port of entry/exit:
Transporter signature (for exports only): Date leaving U.S.:

17. Transporter Acknowledgment of Receipt of Materials
Transporter 1 Printed/Typed Name: Anthony Polk — Signature: [signature] — Month 8 Day 20 Year 15
Transporter 2 Printed/Typed Name — Signature — Month Day Year

18. Discrepancy
18a. Discrepancy Indication Space ☒ Quantity ☐ Type ☐ Residue ☐ Partial Rejection ☐ Full Rejection
Add receipt by not per Donn Williams JB 8/25/15 Manifest Reference Number:
18b. Alternate Facility (or Generator) — U.S. EPA ID Number
Facility's Phone:
18c. Signature of Alternate Facility (or Generator) — Month Day Year

19. Hazardous Waste Report Management Method Codes (i.e., codes for hazardous waste treatment, disposal, and recycling systems)
1. H132 2. 3. 4.

20. Designated Facility Owner or Operator: Certification of receipt of hazardous materials covered by the manifest except as noted in Item 18a
Printed/Typed Name: Mal Alexander — Signature: Mal Alexander — Month 8 Day 25 Year 15

GENERATOR — INT'L — TRANSPORTER — DESIGNATED FACILITY

EPA Form 8700-22 (Rev. 3-05) Previous editions are obsolete.

DESIGNATED FACILITY TO GENERATOR

23933

PEOBITY PRINTING - MERIDIAN, MISSISSIPPI

Waste Management
Emelle Facility
WEIGHED ON CARDINAL SCALES

436709

GROSS 66380 lb
10:08AM 08/25/2015
GROSS 39620 lb
01:42PM 08/25/2015

GROSS	
TARE	26760
NET	12138 K

Customer: Solutia

Transporter: ADW

Truck #: 205 Trailer #: 2012

Receipt #: 508092 Manifest #: 002666520 GBF

DIGITAL WEIGHT INDICATOR & PRINTER

WEIGHED BY MS

FORM 510

Chemical Waste Management
P.O. Box 55
36964 Alabama Hwy 17
Emelle, AL 35459-0055
(205)652-9721

SOLUTIA INC
702 CLYDESDALE AVE

ANNISTON,AL 36201-5328

Attn: DONN WILLIAMS

Site Infomation

SOLUTIA
702 CLYDESDALE AVE

ANNISTON,AL 36201-5328

ACKNOWLEDGEMENT OF RECEIPT OF WASTE SHIPMENT

Generator Name: SOLUTIA
Enclosed is/are your Generator Number Two copy / copies for Alabama Manifest Numbers:

002666520GBF

This copy is to acknowledge that Chemical Waste Management, Inc., of Emelle, Alabama has received your shipment. As a requirement of 40 CFR 264.12 (b), this letter serves to inform you that this facility has the proper permits and will accept your shipment upon completion of waste analysis procedures specified in the facility's Waste Analysis Plan and as determined in the approval waste profile submitted for this/these wastes.

As of September 26, 1997, Chemical Waste Management, Inc., Emelle Alabama (ALD000622464) is operating under a AHWMMA Permit, issued by the Alabama Department of Environmental Management. (RCRA)

Al Talbott
Safety Manager

August 29, 2015

Box 2612

CWMI

Please print or type. (Form designed for use on elite (12-pitch) typewriter.)

Form Approved. OMB No. 2050-0039

UNIFORM HAZARDOUS WASTE MANIFEST

1. Generator ID Number: EXEMPT
2. Page 1 of: 1
3. Emergency Response Phone:
4. Manifest Tracking Number: 002666520 GBF

GENERATOR

5. Generator's Name and Mailing Address
SOLUTIA, INC - ANNISTON PCB SITE
702 CLYDESDALE AVE
ANNISTON AL 36201
Generator's Phone: (800)807-1187

Generator's Site Address (if different than mailing address)

6. Transporter 1 Company Name: Ronnie D. Wood
U.S. EPA ID Number: ALD067138891

7. Transporter 2 Company Name
U.S. EPA ID Number

8. Designated Facility Name and Site Address
CHEMICAL WASTE MANAGEMENT, INC.
HIGHWAY 17 NORTH, MILE MARKER 163
EMELLE AL 35459
Facility's Phone: (205)652-9721
U.S. EPA ID Number: ALD000622464

9a. HM	9b. U.S. DOT Description (including Proper Shipping Name, Hazard Class, ID Number, and Packing Group (if any))	10. Containers No.	10. Containers Type	11. Total Quantity	12. Unit Wt./Vol.	13. Waste Codes
X	1. UN3432,RQ,POLYCHLORINATED BIPHENYLS,SOLID,9,III CM9879	001	DT	18000	K	
	2.					
	3.					
	4.					

14. Special Handling Instructions and Additional Information
1. CM9879 ERG 171 PO#: 4255786 OSD: 4/20/15 Rob Clark
ERI PROVIDER: CHEMTREC (CONTRACT CCN24117)

15. **GENERATOR'S/OFFEROR'S CERTIFICATION:** I hereby declare that the contents of this consignment are fully and accurately described above by the proper shipping name, and are classified, packaged, marked and labeled/placarded, and are in all respects in proper condition for transport according to applicable international and national governmental regulations. If export shipment and I am the Primary Exporter, I certify that the contents of this consignment conform to the terms of the attached EPA Acknowledgment of Consent.
I certify that the waste minimization statement identified in 40 CFR 262.27(a) (if I am a large quantity generator) or (b) (if I am a small quantity generator) is true.

Generator's/Offeror's Printed/Typed Name: DONN WILLIAMS
Signature: D. Williams
Month: 4 Day: 16 Year: 15

INT'L

16. International Shipments ☐ Import to U.S. ☐ Export from U.S. Port of entry/exit:
Transporter signature (for exports only): Date leaving U.S.:

TRANSPORTER

17. Transporter Acknowledgment of Receipt of Materials

Transporter 1 Printed/Typed Name: Anthony Pate
Signature:
Month: 4 Day: 20 Year: 15

Transporter 2 Printed/Typed Name
Signature
Month: Day: Year:

DESIGNATED FACILITY

18. Discrepancy

18a. Discrepancy Indication Space ☐ Quantity ☐ Type ☐ Residue ☐ Partial Rejection ☐ Full Rejection

Manifest Reference Number:

18b. Alternate Facility (or Generator)
U.S. EPA ID Number
Facility's Phone:

18c. Signature of Alternate Facility (or Generator)
Month: Day: Year:

19. Hazardous Waste Report Management Method Codes (i.e., codes for hazardous waste treatment, disposal, and recycling systems)

1.	2.	3.	4.

20. Designated Facility Owner or Operator: Certification of receipt of hazardous materials covered by the manifest except as noted in Item 18a

Printed/Typed Name
Signature
Month: Day: Year:

EPA Form 8700-22 (Rev. 3-05) Previous editions are obsolete.

TRANSPORTER'S COPY

CWMI

Please print or type. (Form designed for use on elite (12-pitch) typewriter.) Form Approved. OMB No. 2050-0039

UNIFORM HAZARDOUS WASTE MANIFEST

1. Generator ID Number	2. Page 1 of	3. Emergency Response Phone	4. Manifest Tracking Number
EXEMPT	1		002734175 GBF

GENERATOR

5. Generator's Name and Mailing Address
SOLUTIA, INC - ANNISTON PCB SITE
702 CLYDESDALE AVE
ANNISTON AL 36201
Generator's Phone: (601) 307-1187

Generator's Site Address (if different than mailing address)

6. Transporter 1 Company Name — U.S. EPA ID Number

7. Transporter 2 Company Name — U.S. EPA ID Number

8. Designated Facility Name and Site Address
CHEMICAL WASTE MANAGEMENT, INC.
HIGHWAY 17 NORTH, MILE MARKER 163
EMELLE AL 35459
Facility's Phone: (205)652-9721

U.S. EPA ID Number: ALD000622464

9a. HM	9b. U.S. DOT Description (including Proper Shipping Name, Hazard Class, ID Number, and Packing Group (if any))	10. Containers No.	10. Containers Type	11. Total Quantity	12. Unit Wt./Vol.	13. Waste Codes
X	1. UN3432,RQ,POLYCHLORINATED BIPHENYLS,SOLID,9,III CM9879	001	DT	18000	K	
	2.					
	3.					
	4.					

14. Special Handling Instructions and Additional Information
1. CM9879 ERG-171 PO#: 4255766 OSD: 9/11/15

ERI PROVIDER: CHEMTREC (CONTRACT CCN24117) Landfill Rev # 2012

15. **GENERATOR'S/OFFEROR'S CERTIFICATION:** I hereby declare that the contents of this consignment are fully and accurately described above by the proper shipping name, and are classified, packaged, marked and labeled/placarded, and are in all respects in proper condition for transport according to applicable international and national governmental regulations. If export shipment and I am the Primary Exporter, I certify that the contents of this consignment conform to the terms of the attached EPA Acknowledgment of Consent.
I certify that the waste minimization statement identified in 40 CFR 262.27(a) (if I am a large quantity generator) or (b) (if I am a small quantity generator) is true.

Generator's/Offeror's Printed/Typed Name: DONN WILLIAMS — Signature — Month 9 Day 11 Year 15

INT'L

16. International Shipments ☐ Import to U.S. ☐ Export from U.S. Port of entry/exit:
Transporter signature (for exports only): Date leaving U.S.:

TRANSPORTER

17. Transporter Acknowledgment of Receipt of Materials

Transporter 1 Printed/Typed Name: Lorenzo Brown — Signature — Month 9 Day 11 Year 15

Transporter 2 Printed/Typed Name — Signature — Month Day Year

DESIGNATED FACILITY

18. Discrepancy

18a. Discrepancy Indication Space ☐ Quantity ☐ Type ☐ Residue ☐ Partial Rejection ☐ Full Rejection

Manifest Reference Number:

18b. Alternate Facility (or Generator) — U.S. EPA ID Number

Facility's Phone:

18c. Signature of Alternate Facility (or Generator) — Month Day Year

19. Hazardous Waste Report Management Method Codes (i.e., codes for hazardous waste treatment, disposal, and recycling systems)

1.	2.	3.	4.

20. Designated Facility Owner or Operator: Certification of receipt of hazardous materials covered by the manifest except as noted in Item 18a

Printed/Typed Name — Signature — Month Day Year

EPA Form 8700-22 (Rev. 3-05) Previous editions are obsolete.

TRANSPORTER'S COPY

APPENDIX D1.8

Miscellaneous

CWMI

Please print or type. (Form designed for use on elite (12-pitch) typewriter.)

Form Approved. OMB No. 2050-0039

UNIFORM HAZARDOUS WASTE MANIFEST

1. Generator ID Number	2. Page 1 of	3. Emergency Response Phone	4. Manifest Tracking Number
EXEMPT	1	770-337-4689	002734148 GBF

GENERATOR

5. Generator's Name and Mailing Address

SOLUTIA, INC - ANNISTON PCB SITE
702 CLYDESDALE AVE
ANNISTON AL 36201

Generator's Phone: (601)807-1187

Generator's Site Address (if different than mailing address)

6. Transporter 1 Company Name — U.S. EPA ID Number

7. Transporter 2 Company Name — U.S. EPA ID Number

8. Designated Facility Name and Site Address — U.S. EPA ID Number

CHEMICAL WASTE MANAGEMENT, INC.
HIGHWAY 17 NORTH, MILE MARKER 163
EMELLE AL 35459

Facility's Phone: (205)652-9721

ALD000622464

9a. HM	9b. U.S. DOT Description (including Proper Shipping Name, Hazard Class, ID Number, and Packing Group (if any))	10. Containers No.	10. Containers Type	11. Total Quantity	12. Unit Wt./Vol.	13. Waste Codes
X	1. UN3432,RQ,POLYCHLORINATED BIPHENYLS,SOLID,9,III CM9879	001	~~DT~~ CM	18000	K	
	2.					
	3.					
	4.					

14. Special Handling Instructions and Additional Information

1. CM9879 ERG-171 PO#: OSD: 2/3/16 Box 25212

ERI PROVIDER: CHEMTREC (CONTRACT CCN24117)

15. **GENERATOR'S/OFFEROR'S CERTIFICATION:** I hereby declare that the contents of this consignment are fully and accurately described above by the proper shipping name, and are classified, packaged, marked and labeled/placarded, and are in all respects in proper condition for transport according to applicable international and national governmental regulations. If export shipment and I am the Primary Exporter, I certify that the contents of this consignment conform to the terms of the attached EPA Acknowledgment of Consent.
I certify that the waste minimization statement identified in 40 CFR 262.27(a) (if I am a large quantity generator) or (b) (if I am a small quantity generator) is true.

Generator's/Offeror's Printed/Typed Name: DONN WILLIAMS — Signature — Month: 2 Day: 3 Year: 16

INT'L

16. International Shipments ☐ Import to U.S. ☐ Export from U.S. Port of entry/exit:

Transporter signature (for exports only): Date leaving U.S.:

TRANSPORTER

17. Transporter Acknowledgment of Receipt of Materials

Transporter 1 Printed/Typed Name: Lorenzo Brown — Signature — Month: 2 Day: 3 Year: 16

Transporter 2 Printed/Typed Name — Signature — Month — Day — Year

DESIGNATED FACILITY

18. Discrepancy

18a. Discrepancy Indication Space ☐ Quantity ☐ Type ☐ Residue ☐ Partial Rejection ☐ Full Rejection

Manifest Reference Number:

18b. Alternate Facility (or Generator) — U.S. EPA ID Number

Facility's Phone:

18c. Signature of Alternate Facility (or Generator) — Month — Day — Year

19. Hazardous Waste Report Management Method Codes (i.e., codes for hazardous waste treatment, disposal, and recycling systems)

1.	2.	3.	4.

20. Designated Facility Owner or Operator: Certification of receipt of hazardous materials covered by the manifest except as noted in Item 18a

Printed/Typed Name — Signature — Month — Day — Year

EPA Form 8700-22 (Rev. 3-05) Previous editions are obsolete.

GENERATOR'S INITIAL COPY

CWMI

Please print or type. (Form designed for use on elite (12-pitch) typewriter.)

Form Approved. OMB No. 2050-0039

UNIFORM HAZARDOUS WASTE MANIFEST

1. Generator ID Number: EXEMPT
2. Page 1 of: 1
3. Emergency Response Phone: 770-337-4619
4. Manifest Tracking Number: 002734155 GBF

GENERATOR

5. Generator's Name and Mailing Address
SOLUTIA, INC - ANNISTON PCB SITE
702 CLYDESDALE AVE
ANNISTON AL 36201
Generator's Phone: (501)807-1187

Generator's Site Address (if different than mailing address)

6. Transporter 1 Company Name — U.S. EPA ID Number

7. Transporter 2 Company Name — U.S. EPA ID Number

8. Designated Facility Name and Site Address — U.S. EPA ID Number
CHEMICAL WASTE MANAGEMENT, INC.
HIGHWAY 17 NORTH, MILE MARKER 163
EMELLE AL 35459
Facility's Phone: (205)652-9721
ALD000622464

9a. HM	9b. U.S. DOT Description (including Proper Shipping Name, Hazard Class, ID Number, and Packing Group (if any))	10. Containers No.	10. Containers Type	11. Total Quantity	12. Unit Wt./Vol.	13. Waste Codes
X	1. UN3432,RQ,POLYCHLORINATED BIPHENYLS,SOLID,9,III CM9879	001	DT	18000	K	
	2.					
	3.					
	4.					

14. Special Handling Instructions and Additional Information
1. CM9879 ERG-171 POE: 4955746 OSD: 11/4/11 11-7-11 Box # 809

ERI PROVIDER: CHEMTREC (CONTRACT CCN24117)

15. **GENERATOR'S/OFFEROR'S CERTIFICATION:** I hereby declare that the contents of this consignment are fully and accurately described above by the proper shipping name, and are classified, packaged, marked and labeled/placarded, and are in all respects in proper condition for transport according to applicable international and national governmental regulations. If export shipment and I am the Primary Exporter, I certify that the contents of this consignment conform to the terms of the attached EPA Acknowledgment of Consent.
I certify that the waste minimization statement identified in 40 CFR 262.27(a) (if I am a large quantity generator) or (b) (if I am a small quantity generator) is true.

Generator's/Offeror's Printed/Typed Name: DONN WILLIAMS — Signature — Month: 11 Day: 4 Year: 11

INT'L

16. International Shipments ☐ Import to U.S. ☐ Export from U.S. Port of entry/exit:
Transporter signature (for exports only): Date leaving U.S.:

TRANSPORTER

17. Transporter Acknowledgment of Receipt of Materials

Transporter 1 Printed/Typed Name — Signature — Month — Day — Year

Transporter 2 Printed/Typed Name — Signature — Month — Day — Year

DESIGNATED FACILITY

18. Discrepancy

18a. Discrepancy Indication Space ☐ Quantity ☐ Type ☐ Residue ☐ Partial Rejection ☐ Full Rejection

Manifest Reference Number:

18b. Alternate Facility (or Generator) — U.S. EPA ID Number

Facility's Phone:

18c. Signature of Alternate Facility (or Generator) — Month — Day — Year

19. Hazardous Waste Report Management Method Codes (i.e., codes for hazardous waste treatment, disposal, and recycling systems)

1.	2.	3.	4.

20. Designated Facility Owner or Operator: Certification of receipt of hazardous materials covered by the manifest except as noted in Item 18a

Printed/Typed Name — Signature — Month — Day — Year

EPA Form 8700-22 (Rev. 3-05) Previous editions are obsolete.

GENERATOR'S INITIAL COPY

WM
Chemical Waste Managment
P.O. Box 55
36964 Alabama Hwy 17
Emelle, AL 35459-0055
(205)652-9721

Manifest Document Number:

SOLUTIA INC
702 CLYDESDALE AVE

ANNISTON, AL 36201-5328

Attn: DONN WILLIAMS

Site Information

SOLUTIA
702 CLYDESDALE AVE

ANNISTON, AL 36201-5328

CERTIFICATE OF DISPOSAL

Chemical Waste Management, Inc. (ALD000622464) has received PCB material from
SOLUTIA

as described on Hazardous Waste Manifest Number 002734155GBF-1
Waste Management, Inc. hereby certifies that the above described material (excluding PCB liquids, if applicable) was landfilled on the dates shown below, in compliance with State and Federal Regulations.

Under civil and criminal penalties of law for the making or submission of false or fraudulent statements or representation (18 U.S.C. 1001 and 15 U.S.C. 2615), I certify that the information contained in or accompanying this document is true, accurate and complete. As to the identified section(s) of this document for which I cannot personally verify truth and accuracy, I certify as the company official having supervisory responsibility for the persons who, acting under my direct instructions, made the verification that this information is true, accurate and complete.

Al Talbott/cm

Al Talbott, Safety Manager
January 13, 2016

OSD	Unique ID	Cont #	Profile	Disposed	Description
1/7/16	002734155GBF-01	1	CM9879	1/12/16	ANNISTON PCB SITE CONSENT DECR

(11)

CWM, INC. - ENELLE ***** Receipt # 511377 ***** Page - 1

Date/Time In 1/12/16 10:00
Load Type Rolloff Federal EPA ID ALD067138891
Transporter ROBBIE D WOOD INC
DOLOMITE AL

** WEIGHT SUMMARY **
Gross 63420.00
Tare .00
Net 35880 .00
Adj. .00
Adj. Net 27,540.00

Truck Number 204 Trailer/Contnr #1 809 #2 #3

12,493 kg

Rcpt Ln#	Doc Ln#	Document Number	Profile Sales	Profile Invoicing	Generator Customer	Cnt #	Cnt Code	Total Quan.	W/V	UOS Units	PCB	Sched Cat	Federal EPA Waste Status	ADEN #
1	1	002734155GBF	CN9879	SOLUTIA ANNISTON AL		1	CN	18000.00	K	Kilogram	Y	PLFB	GC Undeterminable	073116-C007

Doc Seq # 1 ENE SOLUTIA SUBCC Value - NO P.O. Num COD Req'd

>51% OR <51% DEBRIS (CIRCLE)
PREFILLED VAULT Y OR N (CIRCLE)
>51% OR <51% MAC 10% INSPECTION (CIRCLE)
BULK MATERIAL ONLY:
SAMPLED/INSPECTED_____ FREE LIQUIDS DETECTED? YES / NO
SELECT MATERIAL/NON-SELECT MATERIAL_____ WIND DISPERSAL MATERIAL? YES / NO

PHYSICAL DESCRIPTION OF WASTE:_____ SAMPLER/APPROVAL_____

SPOT SAMPLE:____B16-_____ | PHYS. DESCRIPTION_____
RAD.SCREEN POS NEG |
IGN.SCREEN POS NEG
H20 SOL. S F PT/SOL |
H20 RXN/TEMP. INITIAL NO RXN REACTS___ |
H20 RXN/TEMP. 5MIN. NO RXN REACTS
ph (PAPER)_____ |
CN SCREEN + - (PRUSSIAN BLUE)_ __ _ |
CN SCREEN + - (CYANTESMO)
SULFIDE SCREEN + -
ADDITIONAL ANALYTICAL REQ'D? Y N
DESCRIBE:
PCB CONC.(PPM)_____ SULFIDE (9030)_____
%H20 BY KF_____ CYANIDE (9010C)_____ TAB WASTE Y N
PAINT FILTER TEST/ P F SPEC. GRAVITY_____ BHZ CONC.____PPM
COMMENTS:(SAFETY/OPERATIONAL)_____

COMPAT. TEST W/_____ OK___ RXN__

ADD'L SPOT SAMPLE ATTACHED? Y N
DISPOSAL METHOD: S SP ST-3 ST-3/PT P-ST-3 P-ST-3/PT ST-5 ST-5/PT P-ST-5 S01-PTA B-PIH OTHER_____
P-ST-5/PT ST-8 ST-8/PT MIC MAC (MAC INSPECT) F INC SP-VS PCB-MAC P-MAC
P-ST-8 P-ST-8/PT VS-3 VS-5 VS-8
INDICATOR PARAMETER WILL BE CIRCLED
B-MAC LOADS REQUIRING INSPECTION THAT ARE FOUND TO BE LESS THAN 51% MUST
BE RETURNED TO LAB AND PLACED ON HOLD._____
RELEASED FOR DISPOSAL BY:_____ DATE:_____

809

CWM

Please print or type. (Form designed for use on elite (12-pitch) typewriter)

Form Approved. OMB No. 2050-0039

UNIFORM HAZARDOUS WASTE MANIFEST

1. Generator ID Number: EXEMPT
2. Page 1 of 1
3. Emergency Response Phone: 770-337-4619
4. Manifest Tracking Number: 002734155 GBF

5. Generator's Name and Mailing Address
SOLUTIA, INC - ANNISTON PCB SITE
702 CLYDESDALE AVE
ANNISTON AL 36201
Generator's Phone: (601)607-1187

Generator's Site Address (if different than mailing address)

6. Transporter 1 Company Name — U.S. EPA ID Number

7. Transporter 2 Company Name — U.S. EPA ID Number

8. Designated Facility Name and Site Address
CHEMICAL WASTE MANAGEMENT, INC.
HIGHWAY 17 NORTH, MILE MARKER 163
EMELLE AL 35459
Facility's Phone: (205)652-9721

U.S. EPA ID Number: ALD000622484

9a. HM	9b. U.S. DOT Description (including Proper Shipping Name, Hazard Class, ID Number, and Packing Group (if any))	10. Containers No.	10. Containers Type	11. Total Quantity	12. Unit Wt./Vol.	13. Waste Codes
X	1. UN3432,RQ,POLYCHLORINATED BIPHENYLS,SOLID,9,III CM9879	001	DT	~~18000~~ 12,442 JB	K	
	2.					
	3.					
	4.					

14. Special Handling Instructions and Additional Information
1. CM9879 ERQ-171 PO#: 42557066 OSD: 1/4/16 1/7/16 Box # 809

ERI PROVIDER: CHEMTREC (CONTRACT CCN24117)

15. **GENERATOR'S/OFFEROR'S CERTIFICATION:** I hereby declare that the contents of this consignment are fully and accurately described above by the proper shipping name, and are classified, packaged, marked and labeled/placarded, and are in all respects in proper condition for transport according to applicable international and national governmental regulations. If export shipment and I am the Primary Exporter, I certify that the contents of this consignment conform to the terms of the attached EPA Acknowledgment of Consent.
I certify that the waste minimization statement identified in 40 CFR 262.27(a) (if I am a large quantity generator) or (b) (if I am a small quantity generator) is true.

Generator's/Offeror's Printed/Typed Name: DONN WILLIAMS — Signature: [signature] — Month 1 Day 6 Year 16

16. International Shipments ☐ Import to U.S. ☐ Export from U.S. Port of entry/exit:
Transporter signature (for exports only): Date leaving U.S.:

17. Transporter Acknowledgment of Receipt of Materials
Transporter 1 Printed/Typed Name: Floyd CARTER — Signature: Floyd carter — Month 1 Day 07 Year 16
Transporter 2 Printed/Typed Name: — Signature: — Month Day Year

18. Discrepancy
18a. Discrepancy Indication Space ☒ Quantity ☐ Type ☐ Residue ☐ Partial Rejection ☐ Full Rejection
Correct to recvd by cst per Donn Williams JB 1/12/16 Manifest Reference Number:
18b. Alternate Facility (or Generator) — U.S. EPA ID Number
Facility's Phone:
18c. Signature of Alternate Facility (or Generator) — Month Day Year

19. Hazardous Waste Report Management Method Codes (i.e., codes for hazardous waste treatment, disposal, and recycling systems)
1. H132 2. 3. 4.

20. Designated Facility Owner or Operator: Certification of receipt of hazardous materials covered by the manifest except as noted in Item 18a
Printed/Typed Name: Judy Bankhead — Signature: Judy Bankhead — Month 01 Day 12 Year 16

GENERATOR — INT'L — TRANSPORTER — DESIGNATED FACILITY

EPA Form 8700-22 (Rev. 3-05) Previous editions are obsolete.

DESIGNATED FACILITY TO GENERATOR

23933

PRIORITY PRINTING - MERIDIAN, MISSISSIPPI

WASTE MANAGEMENT

Waste Management
Emelle Facility
WEIGHED ON CARDINAL SCALES

433778

GROSS 63420 lb

10:00AM 01/12/2016

GROSS

TARE

NET

GROSS 35880 lb

02:54PM 01/12/2016

27540
13,492

Customer: Solutia

Transporter: RDW

Truck #: 204 Trailer #: 809

Receipt #: 511377 Manifest #: 002734155GBF

DIGITAL WEIGHT INDICATOR & PRINTER

WEIGHED BY JB

FORM 510

Chemical Waste Management
P.O. Box 55
36964 Alabama Hwy 17
Emelle, AL 35459-0055
(205)652-9721

SOLUTIA INC
702 CLYDESDALE AVE

ANNISTON,AL 36201-5328

Attn: DONN WILLIAMS

Site Infomation

SOLUTIA
702 CLYDESDALE AVE

ANNISTON,AL 36201-5328

ACKNOWLEDGEMENT OF RECEIPT OF WASTE SHIPMENT

Generator Name: SOLUTIA
Enclosed is/are your Generator Number Two copy / copies for Alabama Manifest Numbers:

002734155GBF

This copy is to acknowledge that Chemical Waste Management, Inc., of Emelle, Alabama has received your shipment. As a requirement of 40 CFR 264.12 (b), this letter serves to inform you that this facility has the proper permits and will accept your shipment upon completion of waste analysis procedures specified in the facility's Waste Analysis Plan and as determined in the approval waste profile submitted for this/these wastes.

As of September 26, 1997, Chemical Waste Management, Inc., Emelle Alabama (ALD000622464) is operating under a AHWMMA Permit, issued by the Alabama Department of Environmental Management. (RCRA)

Al Talbott
Safety Manager

January 13, 2016

CWMI

Please print or type. (Form designed for use on elite (12-pitch) typewriter.)

Form Approved. OMB No. 2050-0039

UNIFORM HAZARDOUS WASTE MANIFEST

1. Generator ID Number: EXEMPT
2. Page 1 of 1
3. Emergency Response Phone: 770-337-4645
4. Manifest Tracking Number: 002734159 GBF

5. Generator's Name and Mailing Address
SOLUTIA, INC - ANNISTON PCB SITE
702 CLYDESDALE AVE
ANNISTON AL 36201
Generator's Phone: (601)807-1187

Generator's Site Address (if different than mailing address)

6. Transporter 1 Company Name: Caldwell D. Wood Inc
U.S. EPA ID Number: [illegible]

7. Transporter 2 Company Name
U.S. EPA ID Number

8. Designated Facility Name and Site Address
CHEMICAL WASTE MANAGEMENT, INC.
HIGHWAY 17 NORTH, MILE MARKER 163
EMELLE AL 35459
Facility's Phone: (205)652-9721
U.S. EPA ID Number: ALD000622464

9a. HM	9b. U.S. DOT Description (including Proper Shipping Name, Hazard Class, ID Number, and Packing Group (if any))	10. Containers No.	Type	11. Total Quantity	12. Unit Wt./Vol.	13. Waste Codes
X	1. UN3432,RQ,POLYCHLORINATED BIPHENYLS,SOLID,9,III CM9879	001	DT	18000	K	
	2.					
	3.					
	4.					

14. Special Handling Instructions and Additional Information
1. CM9879 ERG-171 PO#: 42557866 OSD: 10/6/15
ERI PROVIDER: CHEMTREC (CONTRACT CCN24117)
Box 2020

15. GENERATOR'S/OFFEROR'S CERTIFICATION: I hereby declare that the contents of this consignment are fully and accurately described above by the proper shipping name, and are classified, packaged, marked and labeled/placarded, and are in all respects in proper condition for transport according to applicable international and national governmental regulations. If export shipment and I am the Primary Exporter, I certify that the contents of this consignment conform to the terms of the attached EPA Acknowledgment of Consent.
I certify that the waste minimization statement identified in 40 CFR 262.27(a) (if I am a large quantity generator) or (b) (if I am a small quantity generator) is true.

Generator's/Offeror's Printed/Typed Name: DONN WILLIAMS
Signature: [signature]
Month 10 Day 6 Year 15

16. International Shipments ☐ Import to U.S. ☐ Export from U.S. Port of entry/exit:
Transporter signature (for exports only): Date leaving U.S.:

17. Transporter Acknowledgment of Receipt of Materials
Transporter 1 Printed/Typed Name: [illegible]
Signature: [signature]
Month 10 Day 6 Year 15
Transporter 2 Printed/Typed Name
Signature
Month Day Year

18. Discrepancy
18a. Discrepancy Indication Space ☐ Quantity ☐ Type ☐ Residue ☐ Partial Rejection ☐ Full Rejection
Manifest Reference Number:

18b. Alternate Facility (or Generator)
U.S. EPA ID Number
Facility's Phone:

18c. Signature of Alternate Facility (or Generator)
Month Day Year

19. Hazardous Waste Report Management Method Codes (i.e., codes for hazardous waste treatment, disposal, and recycling systems)
1. 2. 3. 4.

20. Designated Facility Owner or Operator: Certification of receipt of hazardous materials covered by the manifest except as noted in Item 18a
Printed/Typed Name
Signature
Month Day Year

GENERATOR / INT'L / TRANSPORTER / DESIGNATED FACILITY

EPA Form 8700-22 (Rev. 3-05) Previous editions are obsolete.

GENERATOR'S INITIAL COPY

Waste Management
Emelle Facility
WEIGHED ON CARDINAL SCALES

435755

GROSS 63440 lb
01:32PM 10/22/2015

GROSS 39820 lb
02:51PM 10/22/2015

GROSS
TARE
NET 23620

Customer: Solutia

Transporter: KDW 16714C

Truck #: 205 Trailer #: 2020

Receipt #: 509598 Manifest #: 002734159 GBF

DIGITAL WEIGHT INDICATOR & PRINTER
WEIGHED BY MT

FORM 510

CWMI

Please print or type. (Form designed for use on elite (12-pitch) typewriter.) Form Approved. OMB No. 2050-0039

UNIFORM HAZARDOUS WASTE MANIFEST

1. Generator ID Number: EXEMPT
2. Page 1 of: 1
3. Emergency Response Phone: (205) 337-4609
4. Manifest Tracking Number: 002734160 GBF

GENERATOR

5. Generator's Name and Mailing Address
SOLUTIA, INC - ANNISTON PCB SITE
702 CLYDESDALE AVE
ANNISTON AL 36201
Generator's Phone: (601) 607-1187

Generator's Site Address (if different than mailing address)

6. Transporter 1 Company Name: Cobbie & Wood Inc
U.S. EPA ID Number: ALD062138891

7. Transporter 2 Company Name
U.S. EPA ID Number

8. Designated Facility Name and Site Address
CHEMICAL WASTE MANAGEMENT, INC.
HIGHWAY 17 NORTH, MILE MARKER 163
EMELLE AL 35459
Facility's Phone: (205)652-9721
U.S. EPA ID Number: ALD000622464

9a. HM	9b. U.S. DOT Description (including Proper Shipping Name, Hazard Class, ID Number, and Packing Group (if any))	10. Containers No.	10. Containers Type	11. Total Quantity	12. Unit Wt./Vol.	13. Waste Codes
X	1. UN3432,RQ,POLYCHLORINATED BIPHENYLS,SOLID,9,III CM9879	001	DT	18000	K	
	2.					
	3.					
	4.					

14. Special Handling Instructions and Additional Information
1. CM9879 ERG-171 PO#: 4255786b OSD: 10/1/15 Bin # 1003

ERI PROVIDER: CHEMTREC (CONTRACT CCN24117)

15. GENERATOR'S/OFFEROR'S CERTIFICATION: I hereby declare that the contents of this consignment are fully and accurately described above by the proper shipping name, and are classified, packaged, marked and labeled/placarded, and are in all respects in proper condition for transport according to applicable international and national governmental regulations. If export shipment and I am the Primary Exporter, I certify that the contents of this consignment conform to the terms of the attached EPA Acknowledgment of Consent.
I certify that the waste minimization statement identified in 40 CFR 262.27(a) (if I am a large quantity generator) or (b) (if I am a small quantity generator) is true.

Generator's/Offeror's Printed/Typed Name: DONN WILLIAMS
Signature: DW
Month: 10 Day: 1 Year: 15

INT'L

16. International Shipments ☐ Import to U.S. ☐ Export from U.S. Port of entry/exit:
Transporter signature (for exports only): Date leaving U.S.:

TRANSPORTER

17. Transporter Acknowledgment of Receipt of Materials

Transporter 1 Printed/Typed Name: Randy Gunter
Signature: Randy Gunter
Month: 10 Day: 6 Year: 15

Transporter 2 Printed/Typed Name
Signature
Month Day Year

DESIGNATED FACILITY

18. Discrepancy

18a. Discrepancy Indication Space ☐ Quantity ☐ Type ☐ Residue ☐ Partial Rejection ☐ Full Rejection

Manifest Reference Number:

18b. Alternate Facility (or Generator)
U.S. EPA ID Number
Facility's Phone:

18c. Signature of Alternate Facility (or Generator)
Month Day Year

19. Hazardous Waste Report Management Method Codes (i.e., codes for hazardous waste treatment, disposal, and recycling systems)

1.	2.	3.	4.

20. Designated Facility Owner or Operator: Certification of receipt of hazardous materials covered by the manifest except as noted in Item 18a

Printed/Typed Name
Signature
Month Day Year

EPA Form 8700-22 (Rev. 3-05) Previous editions are obsolete.

GENERATOR'S INITIAL COPY

Waste Management
Emelle Facility
WEIGHED ON CARDINAL SCALES

435740

GROSS 57600 lb
09:30AM 10/22/2015

GROSS 35580 lb
03:31PM 10/22/2015

10-22-15 MZ

GROSS 35100 lb
04:04PM 10/22/2015

22506
102066K

GROSS
TARE
NET

Customer: Solutia

Transporter: RDW

Truck #: 204 Trailer #: 1003

Receipt #: 509585 Manifest #: 002734160 GBF

DIGITAL WEIGHT INDICATOR & PRINTER

WEIGHED BY MZ

FORM 510

CWMI

Please print or type. (Form designed for use on elite (12-pitch) typewriter.)

Form Approved. OMB No. 2050-0039

UNIFORM HAZARDOUS WASTE MANIFEST

1. Generator ID Number: EXEMPT
2. Page 1 of 1
3. Emergency Response Phone:
4. Manifest Tracking Number: 002734162 GBF

5. Generator's Name and Mailing Address
SOLUTIA, INC - ANNISTON PCB SITE
702 CLYDESDALE AVE
ANNISTON AL 36201
Generator's Phone: (601)807-1187

Generator's Site Address (if different than mailing address)

6. Transporter 1 Company Name
U.S. EPA ID Number

7. Transporter 2 Company Name
U.S. EPA ID Number

8. Designated Facility Name and Site Address
CHEMICAL WASTE MANAGEMENT, INC.
HIGHWAY 17 NORTH, MILE MARKER 163
EMELLE AL 35459
Facility's Phone: (205)652-9721

U.S. EPA ID Number: ALD000622464

9a. HM	9b. U.S. DOT Description (including Proper Shipping Name, Hazard Class, ID Number, and Packing Group (if any))	10. Containers No.	10. Containers Type	11. Total Quantity	12. Unit Wt./Vol.	13. Waste Codes
X	1. UN3432,RQ,POLYCHLORINATED BIPHENYLS,SOLID,9,III CM9879	001	DT	18000	K	
	2.					
	3.					
	4.					

14. Special Handling Instructions and Additional Information
1. CM9879 ERG-171 PO#4/2557866 OSD:
ERI PROVIDER: CHEMTREC (CONTRACT CCN24117)
Area E

15. **GENERATOR'S/OFFEROR'S CERTIFICATION:** I hereby declare that the contents of this consignment are fully and accurately described above by the proper shipping name, and are classified, packaged, marked and labeled/placarded, and are in all respects in proper condition for transport according to applicable international and national governmental regulations. If export shipment and I am the Primary Exporter, I certify that the contents of this consignment conform to the terms of the attached EPA Acknowledgment of Consent.
I certify that the waste minimization statement identified in 40 CFR 262.27(a) (if I am a large quantity generator) or (b) (if I am a small quantity generator) is true.

Generator's/Offeror's Printed/Typed Name: DONN WILLIAMS
Signature: [signature]
Month Day Year

16. International Shipments ☐ Import to U.S. ☐ Export from U.S. Port of entry/exit:
Transporter signature (for exports only): Date leaving U.S.:

17. Transporter Acknowledgment of Receipt of Materials
Transporter 1 Printed/Typed Name: [illegible]
Signature:
Month Day Year

Transporter 2 Printed/Typed Name
Signature
Month Day Year

18. Discrepancy
18a. Discrepancy Indication Space ☐ Quantity ☐ Type ☐ Residue ☐ Partial Rejection ☐ Full Rejection
Manifest Reference Number:

18b. Alternate Facility (or Generator)
U.S. EPA ID Number
Facility's Phone:

18c. Signature of Alternate Facility (or Generator)
Month Day Year

19. Hazardous Waste Report Management Method Codes (i.e., codes for hazardous waste treatment, disposal, and recycling systems)
1. 2. 3. 4.

20. Designated Facility Owner or Operator: Certification of receipt of hazardous materials covered by the manifest except as noted in Item 18a
Printed/Typed Name
Signature
Month Day Year

GENERATOR | INT'L | TRANSPORTER | DESIGNATED FACILITY

EPA Form 8700-22 (Rev. 3-05) Previous editions are obsolete.

GENERATOR'S INITIAL COPY

Bx# 25112

CWMI

Please print or type. (Form designed for use on elite (12-pitch) typewriter.)

Form Approved. OMB No. 2050-0039

UNIFORM HAZARDOUS WASTE MANIFEST	1. Generator ID Number	2. Page 1 of	3. Emergency Response Phone	4. Manifest Tracking Number
	EXEMPT	1	770-337-4149	002734163 GBF

GENERATOR

5. Generator's Name and Mailing Address

SOLUTIA, INC - ANNISTON PCB SITE
702 CLYDESDALE AVE
ANNISTON AL 36201
Generator's Phone: (601) 807-1187

Generator's Site Address (if different than mailing address)

6. Transporter 1 Company Name: Bobby D. Ward Inc

U.S. EPA ID Number: ALD067138851

7. Transporter 2 Company Name

U.S. EPA ID Number

8. Designated Facility Name and Site Address

CHEMICAL WASTE MANAGEMENT, INC.
HIGHWAY 17 NORTH, MILE MARKER 163
EMELLE AL 35459

Facility's Phone: (205)652-9721

U.S. EPA ID Number: ALD000622464

9a. HM	9b. U.S. DOT Description (including Proper Shipping Name, Hazard Class, ID Number, and Packing Group (if any))	10. Containers No.	10. Containers Type	11. Total Quantity	12. Unit Wt./Vol.	13. Waste Codes
X	1. UN3432,RQ,POLYCHLORINATED BIPHENYLS,SOLID,9,III CM9879	001	DT	18000	K	
	2.					
	3.					
	4.					

14. Special Handling Instructions and Additional Information

1. CM9879 ERG-171 PO#: 4555716 OSD: 9/29/15 Bx# 25112

ERI PROVIDER: CHEMTREC (CONTRACT CCN24117)

15. **GENERATOR'S/OFFEROR'S CERTIFICATION:** I hereby declare that the contents of this consignment are fully and accurately described above by the proper shipping name, and are classified, packaged, marked and labeled/placarded, and are in all respects in proper condition for transport according to applicable international and national governmental regulations. If export shipment and I am the Primary Exporter, I certify that the contents of this consignment conform to the terms of the attached EPA Acknowledgment of Consent.
I certify that the waste minimization statement identified in 40 CFR 262.27(a) (if I am a large quantity generator) or (b) (if I am a small quantity generator) is true.

Generator's/Offeror's Printed/Typed Name: DONN WILLIAMS — Signature — Month: 9 Day: 25 Year: 15

INT'L

16. International Shipments ☐ Import to U.S. ☐ Export from U.S. Port of entry/exit:

Transporter signature (for exports only): Date leaving U.S.:

TRANSPORTER

17. Transporter Acknowledgment of Receipt of Materials

Transporter 1 Printed/Typed Name: Charles McMillan — Signature — Month: 09 Day: 29 Year: 15

Transporter 2 Printed/Typed Name — Signature — Month — Day — Year

DESIGNATED FACILITY

18. Discrepancy

18a. Discrepancy Indication Space ☐ Quantity ☐ Type ☐ Residue ☐ Partial Rejection ☐ Full Rejection

Manifest Reference Number:

18b. Alternate Facility (or Generator) — U.S. EPA ID Number

Facility's Phone:

18c. Signature of Alternate Facility (or Generator) — Month — Day — Year

19. Hazardous Waste Report Management Method Codes (i.e., codes for hazardous waste treatment, disposal, and recycling systems)

1.	2.	3.	4.

20. Designated Facility Owner or Operator: Certification of receipt of hazardous materials covered by the manifest except as noted in Item 18a

Printed/Typed Name — Signature — Month — Day — Year

EPA Form 8700-22 (Rev. 3-05) Previous editions are obsolete.

GENERATOR'S INITIAL COPY

WM
Chemical Waste Managment
P.O. Box 55
36964 Alabama Hwy 17
Emelle, AL 35459-0055
(205)652-9721

Manifest Document Number:

SOLUTIA INC
702 CLYDESDALE AVE

ANNISTON, AL 36201-5328

Attn: DONN WILLIAMS

Site Information

SOLUTIA
702 CLYDESDALE AVE

ANNISTON, AL 36201-5328

CERTIFICATE OF DISPOSAL

Chemical Waste Management, Inc. (ALD000622464) has received PCB material from
SOLUTIA

as described on Hazardous Waste Manifest Number 002734164GBF-1
Waste Management, Inc. hereby certifies that the above described material (excluding PCB liquids, if applicable) was landfilled on the dates shown below, in compliance with State and Federal Regulations.

Under civil and criminal penalties of law for the making or submission of false or fraudulent statements or representation (18 U.S.C. 1001 and 15 U.S.C. 2615), I certify that the information contained in or accompanying this document is true, accurate and complete. As to the identified section(s) of this document for which I cannot personally verify truth and accuracy, I certify as the company official having supervisory responsibility for the persons who, acting under my direct instructions, made the verification that this information is true, accurate and complete.

Al Talbott /cm

Al Talbott, Safety Manager
October 07, 2015

OSD	Unique ID	Cont #	Profile	Disposed	Description
9/28/15	002734164GBF-01	1	CM9879	10/5/15	ANNISTON PCB SITE CONSENT DECR

Box # 812

119575

CWMI

Please print or type. (Form designed for use on elite (12-pitch) typewriter.)

Form Approved. OMB No. 2050-0039

UNIFORM HAZARDOUS WASTE MANIFEST

1. Generator ID Number: EXEMPT

2. Page 1 of: 1

3. Emergency Response Phone:

4. Manifest Tracking Number: 002734164 GBF

GENERATOR

5. Generator's Name and Mailing Address

SOLUTIA, INC - ANNISTON PCB SITE
702 CLYDESDALE AVE
ANNISTON AL 36201
Generator's Phone: (601)807-1187

Generator's Site Address (if different than mailing address)

6. Transporter 1 Company Name: Robbie D. Wood Inc

U.S. EPA ID Number: ALD067138891

7. Transporter 2 Company Name

U.S. EPA ID Number

8. Designated Facility Name and Site Address

CHEMICAL WASTE MANAGEMENT, INC.
HIGHWAY 17 NORTH, MILE MARKER 163
EMELLE AL 35459

Facility's Phone: (205)652-9721

U.S. EPA ID Number: ALD000622464

9a. HM	9b. U.S. DOT Description (including Proper Shipping Name, Hazard Class, ID Number, and Packing Group (if any))	10. Containers No.	10. Containers Type	11. Total Quantity	12. Unit Wt./Vol.	13. Waste Codes
X	1. UN3432,RQ,POLYCHLORINATED BIPHENYLS,SOLID,9,III CM9879	001	DT CM	18000 10,904 JB 10/5/15	K	
	2.					
	3.					
	4.					

14. Special Handling Instructions and Additional Information

1. CM9879 ERG-171 PO#: 4255786 OSD: 9/28/15 Box 812

ERI PROVIDER: CHEMTREC (CONTRACT CCN24117)

15. **GENERATOR'S/OFFEROR'S CERTIFICATION:** I hereby declare that the contents of this consignment are fully and accurately described above by the proper shipping name, and are classified, packaged, marked and labeled/placarded, and are in all respects in proper condition for transport according to applicable international and national governmental regulations. If export shipment and I am the Primary Exporter, I certify that the contents of this consignment conform to the terms of the attached EPA Acknowledgment of Consent.
I certify that the waste minimization statement identified in 40 CFR 262.27(a) (if I am a large quantity generator) or (b) (if I am a small quantity generator) is true.

Generator's/Offeror's Printed/Typed Name: DONN WILLIAMS

Signature: DW

Month: 9 Day: 28 Year: 15

INT'L

16. International Shipments ☐ Import to U.S. ☐ Export from U.S. Port of entry/exit:

Transporter signature (for exports only): Date leaving U.S.:

TRANSPORTER

17. Transporter Acknowledgment of Receipt of Materials

Transporter 1 Printed/Typed Name: Charles McCutler

Signature: Charles McCutler

Month: 09 Day: 28 Year: 15

Transporter 2 Printed/Typed Name

Signature

Month Day Year

DESIGNATED FACILITY

18. Discrepancy

18a. Discrepancy Indication Space ☒ Quantity ☐ Type ☐ Residue ☐ Partial Rejection ☐ Full Rejection

Correct to recvd kg wt per Donn Williams. JB 10/5/15 Manifest Reference Number:

18b. Alternate Facility (or Generator) U.S. EPA ID Number

Facility's Phone:

18c. Signature of Alternate Facility (or Generator) Month Day Year

19. Hazardous Waste Report Management Method Codes (i.e., codes for hazardous waste treatment, disposal, and recycling systems)

1.	2.	3.	4.
M132			

20. Designated Facility Owner or Operator: Certification of receipt of hazardous materials covered by the manifest except as noted in Item 18a

Printed/Typed Name: Mal Alexander

Signature

Month: 10 Day: 5 Year: 15

EPA Form 8700-22 (Rev. 3-05) Previous editions are obsolete.

DESIGNATED FACILITY TO GENERATOR

23933

PRIORITY PRINTING - MERIDIAN, MISSISSIPPI

Waste Management
Emelle Facility
WEIGHED ON CARDINAL SCALES

436035

GROSS 63700 lb
10:00AM 10/05/2015 GROSS

GROSS 39660 lb
04:05PM 10/05/2015 TARE

24040 NET

Customer: Solutia

Transporter: ROW 10904K

Truck #: 205 Trailer #: 812

Receipt #: 509024 Manifest #: 002734164 GBF

DIGITAL WEIGHT INDICATOR & PRINTER

WEIGHED BY MA

FORM 510

Chemical Waste Management
P.O. Box 55
36964 Alabama Hwy 17
Emelle, AL 35459-0055
(205)652-9721

SOLUTIA INC
702 CLYDESDALE AVE

ANNISTON,AL 36201-5328

Attn: DONN WILLIAMS

Site Infomation

SOLUTIA
702 CLYDESDALE AVE

ANNISTON,AL 36201-5328

ACKNOWLEDGEMENT OF RECEIPT OF WASTE SHIPMENT

Generator Name: SOLUTIA
Enclosed is/are your Generator Number Two copy / copies for Alabama Manifest Numbers:

002734164GBF

This copy is to acknowledge that Chemical Waste Management, Inc., of Emelle, Alabama has received your shipment. As a requirement of 40 CFR 264.12 (b), this letter serves to inform you that this facility has the proper permits and will accept your shipment upon completion of waste analysis procedures specified in the facility's Waste Analysis Plan and as determined in the approval waste profile submitted for this/these wastes.

As of September 26, 1997, Chemical Waste Management, Inc., Emelle Alabama (ALD000622464) is operating under a AHWMMA Permit, issued by the Alabama Department of Environmental Management. (RCRA)

Al Talbott
Safety Manager

October 07, 2015

CWMI

Please print or type. (Form designed for use on elite (12-pitch) typewriter.)

Form Approved. OMB No. 2050-0039

UNIFORM HAZARDOUS WASTE MANIFEST	1. Generator ID Number	2. Page 1 of	3. Emergency Response Phone	4. Manifest Tracking Number
	EXEMPT	1		002734165 GBF

GENERATOR

5. Generator's Name and Mailing Address

SOLUTIA, INC - ANNISTON PCB SITE
702 CLYDESDALE AVE
ANNISTON AL 36201

Generator's Phone: (601) 307-1187

Generator's Site Address (if different than mailing address)

6. Transporter 1 Company Name — U.S. EPA ID Number

7. Transporter 2 Company Name — U.S. EPA ID Number

8. Designated Facility Name and Site Address — U.S. EPA ID Number

CHEMICAL WASTE MANAGEMENT, INC.
HIGHWAY 17 NORTH, MILE MARKER 163
EMELLE AL 35459

ALD000622464

Facility's Phone: (205) 652-9721

9a. HM	9b. U.S. DOT Description (including Proper Shipping Name, Hazard Class, ID Number, and Packing Group (if any))	10. Containers No.	10. Containers Type	11. Total Quantity	12. Unit Wt./Vol.	13. Waste Codes
X	1. UN3432,RQ,POLYCHLORINATED BIPHENYLS,SOLID,9,III CM9879	001	DT	18000	K	
	2.					
	3.					
	4.					

14. Special Handling Instructions and Additional Information

1. CM9879 ERG-171 PO#: 4500711 OSD: 9/29/15 Bx 737

ERI PROVIDER: CHEMTREC (CONTRACT CCN24117)

15. GENERATOR'S/OFFEROR'S CERTIFICATION: I hereby declare that the contents of this consignment are fully and accurately described above by the proper shipping name, and are classified, packaged, marked and labeled/placarded, and are in all respects in proper condition for transport according to applicable international and national governmental regulations. If export shipment and I am the Primary Exporter, I certify that the contents of this consignment conform to the terms of the attached EPA Acknowledgment of Consent.
I certify that the waste minimization statement identified in 40 CFR 262.27(a) (if I am a large quantity generator) or (b) (if I am a small quantity generator) is true.

Generator's/Offeror's Printed/Typed Name: DONN WILLIAMS — Signature: D.W. Williams — Month: 7 — Day: 31 — Year: 15

INT'L

16. International Shipments ☐ Import to U.S. ☐ Export from U.S. Port of entry/exit:

Transporter signature (for exports only): Date leaving U.S.:

TRANSPORTER

17. Transporter Acknowledgment of Receipt of Materials

Transporter 1 Printed/Typed Name — Signature — Month — Day — Year

Transporter 2 Printed/Typed Name — Signature — Month — Day — Year

DESIGNATED FACILITY

18. Discrepancy

18a. Discrepancy Indication Space ☐ Quantity ☐ Type ☐ Residue ☐ Partial Rejection ☐ Full Rejection

Manifest Reference Number:

18b. Alternate Facility (or Generator) — U.S. EPA ID Number

Facility's Phone:

18c. Signature of Alternate Facility (or Generator) — Month — Day — Year

19. Hazardous Waste Report Management Method Codes (i.e., codes for hazardous waste treatment, disposal, and recycling systems)

1.	2.	3.	4.

20. Designated Facility Owner or Operator: Certification of receipt of hazardous materials covered by the manifest except as noted in Item 18a

Printed/Typed Name — Signature — Month — Day — Year

EPA Form 8700-22 (Rev. 3-05) Previous editions are obsolete.

GENERATOR'S INITIAL COPY

WM
Chemical Waste Managment
P.O. Box 55
36964 Alabama Hwy 17
Emelle, AL 35459-0055
(205)652-9721

Manifest Document Number:

SOLUTIA INC
702 CLYDESDALE AVE

ANNISTON, AL 36201-5328

Attn: DONN WILLIAMS

Site Information

SOLUTIA
702 CLYDESDALE AVE

ANNISTON, AL 36201-5328

CERTIFICATE OF DISPOSAL

Chemical Waste Management, Inc. (ALD000622464) has received PCB material from
SOLUTIA

as described on Hazardous Waste Manifest Number 002734166GBF-1
Waste Management, Inc. hereby certifies that the above described material (excluding PCB liquids, if applicable) was landfilled on the dates shown below, in compliance with State and Federal Regulations.

Under civil and criminal penalties of law for the making or submission of false or fraudulent statements or representation (18 U.S.C. 1001 and 15 U.S.C. 2615), I certify that the information contained in or accompanying this document is true, accurate and complete. As to the identified section(s) of this document for which I cannot personally verify truth and accuracy, I certify as the company official having supervisory responsibility for the persons who, acting under my direct instructions, made the verification that this information is true, accurate and complete.

Al Talbott/cm

Al Talbott, Safety Manager
October 07, 2015

OSD	Unique ID	Cont #	Profile	Disposed	Description
9/25/15	002734166GBF-01	1	CM9879	10/3/15	ANNISTON PCB SITE CONSENT DECR

Buy # 1002

119859

CWMI

Please print or type. (Form designed for use on elite (12-pitch) typewriter.)

Form Approved. OMB No. 2050-0039

UNIFORM HAZARDOUS WASTE MANIFEST

1. Generator ID Number	2. Page 1 of	3. Emergency Response Phone	4. Manifest Tracking Number
EXEMPT	1		002734166 GBF

GENERATOR

5. Generator's Name and Mailing Address

SOLUTIA, INC - ANNISTON PCB SITE
702 CLYDESDALE AVE
ANNISTON AL 36201

Generator's Phone: (601)807-1187

Generator's Site Address (if different than mailing address)

6. Transporter 1 Company Name: Robbie D. Wood Inc

U.S. EPA ID Number: ALD067138891

7. Transporter 2 Company Name

U.S. EPA ID Number

8. Designated Facility Name and Site Address

CHEMICAL WASTE MANAGEMENT, INC.
HIGHWAY 17 NORTH, MILE MARKER 163
EMELLE AL 35459

Facility's Phone: (205)652-9721

U.S. EPA ID Number: ALD000622464

9a. HM	9b. U.S. DOT Description (including Proper Shipping Name, Hazard Class, ID Number, and Packing Group (if any))	10. Containers No.	10. Containers Type	11. Total Quantity	12. Unit Wt./Vol.	13. Waste Codes
X	1. UN3432,RQ,POLYCHLORINATED BIPHENYLS,SOLID,9,III CM0879	001	~~BT~~ CM	~~18000~~ 11,231 JB 10/5/15	K	
	2.					
	3.					
	4.					

14. Special Handling Instructions and Additional Information

1. CM0879 ERG-171 PO#: 4255786 OSD: 9/25/15 Box 1002

ERI PROVIDER: CHEMTREC (CONTRACT CCN24117)

15. **GENERATOR'S/OFFEROR'S CERTIFICATION:** I hereby declare that the contents of this consignment are fully and accurately described above by the proper shipping name, and are classified, packaged, marked and labeled/placarded, and are in all respects in proper condition for transport according to applicable international and national governmental regulations. If export shipment and I am the Primary Exporter, I certify that the contents of this consignment conform to the terms of the attached EPA Acknowledgment of Consent.
I certify that the waste minimization statement identified in 40 CFR 262.27(a) (if I am a large quantity generator) or (b) (if I am a small quantity generator) is true.

Generator's/Offeror's Printed/Typed Name: DONN WILLIAMS

Signature

Month: 9 Day: 25 Year: 15

INT'L

16. International Shipments ☐ Import to U.S. ☐ Export from U.S. Port of entry/exit:

Transporter signature (for exports only): Date leaving U.S.:

TRANSPORTER

17. Transporter Acknowledgment of Receipt of Materials

Transporter 1 Printed/Typed Name: Charles McCullar

Signature

Month: 09 Day: 25 Year: 15

Transporter 2 Printed/Typed Name

Signature

Month Day Year

DESIGNATED FACILITY

18. Discrepancy

18a. Discrepancy Indication Space ☒ Quantity ☐ Type ☐ Residue ☐ Partial Rejection ☐ Full Rejection

Correct to rec'd wt per Donn Williams. JB 10/5/15

Manifest Reference Number:

18b. Alternate Facility (or Generator)

U.S. EPA ID Number

Facility's Phone:

18c. Signature of Alternate Facility (or Generator)

Month Day Year

19. Hazardous Waste Report Management Method Codes (i.e., codes for hazardous waste treatment, disposal, and recycling systems)

1.	2.	3.	4.
H132			

20. Designated Facility Owner or Operator: Certification of receipt of hazardous materials covered by the manifest except as noted in Item 18a

Printed/Typed Name: Mal Alexander

Signature

Month: 10 Day: 5 Year: 15

EPA Form 8700-22 (Rev. 3-05) Previous editions are obsolete.

DESIGNATED FACILITY TO GENERATOR

23933

PRIORITY PRINTING - MERIDIAN, MISSISSIPPI

WASTE MANAGEMENT

Waste Management
Emelle Facility
WEIGHED ON CARDINAL SCALES

436009

GROSS 59580 lb
01:35PM 10/03/2015

GROSS 34820 lb
02:40PM 10/03/2015

GROSS
TARE
NET

24760
11231K

Customer: Soluția

Transporter: BDW

Truck #: 204 Trailer #: 1002

Receipt #: 509005 Manifest #: 002734166 GBF

DIGITAL WEIGHT INDICATOR & PRINTER

WEIGHED BY MA

FORM 510

Chemical Waste Management
P.O. Box 55
36964 Alabama Hwy 17
Emelle, AL 35459-0055
(205)652-9721

SOLUTIA INC
702 CLYDESDALE AVE

ANNISTON,AL 36201-5328

Attn: DONN WILLIAMS

Site Infomation

SOLUTIA
702 CLYDESDALE AVE

ANNISTON,AL 36201-5328

ACKNOWLEDGEMENT OF RECEIPT OF WASTE SHIPMENT

Generator Name: SOLUTIA
Enclosed is/are your Generator Number Two copy / copies for Alabama Manifest Numbers:

002734166GBF

This copy is to acknowledge that Chemical Waste Management, Inc., of Emelle, Alabama has received your shipment. As a requirement of 40 CFR 264.12 (b), this letter serves to inform you that this facility has the proper permits and will accept your shipment upon completion of waste analysis procedures specified in the facility's Waste Analysis Plan and as determined in the approval waste profile submitted for this/these wastes.

As of September 26, 1997, Chemical Waste Management, Inc., Emelle Alabama (ALD000622464) is operating under a AHWMMA Permit, issued by the Alabama Department of Environmental Management. (RCRA)

Al Talbott
Safety Manager

October 07, 2015

Box 2 5120

CWMI

Please print or type. (Form designed for use on elite (12-pitch) typewriter.) Form Approved. OMB No. 2050-0039

UNIFORM HAZARDOUS WASTE MANIFEST

1. Generator ID Number: EXEMPT
2. Page 1 of: 1
3. Emergency Response Phone: 770-937-4689
4. Manifest Tracking Number: 002734167 GBF

GENERATOR

5. Generator's Name and Mailing Address:
SOLUTIA, INC - ANNISTON PCB SITE
702 CLYDESDALE AVE
ANNISTON AL 36201
Generator's Phone: (256)307-1187

Generator's Site Address (if different than mailing address):

6. Transporter 1 Company Name: Robbie D Wood INC
U.S. EPA ID Number: ALDO 7138891

7. Transporter 2 Company Name:
U.S. EPA ID Number:

8. Designated Facility Name and Site Address:
CHEMICAL WASTE MANAGEMENT, INC.
HIGHWAY 17 NORTH, MILE MARKER 163
EMELLE AL 35459
Facility's Phone: (205)652-9721
U.S. EPA ID Number: ALD000622484

9a. HM	9b. U.S. DOT Description (including Proper Shipping Name, Hazard Class, ID Number, and Packing Group (if any))	10. Containers No.	10. Containers Type	11. Total Quantity	12. Unit Wt./Vol.	13. Waste Codes
X	1. UN3432,RQ,POLYCHLORINATED BIPHENYLS,SOLID,9,III CM9879	001	DT CM	18000	K	
	2.					
	3.					
	4.					

14. Special Handling instructions and Additional Information
1. CM9879 ERG-171 PO#: 4255786 OSD: 7/28/15

ERI PROVIDER: CHEMTREC (CONTRACT CCN24117)

15. **GENERATOR'S/OFFEROR'S CERTIFICATION:** I hereby declare that the contents of this consignment are fully and accurately described above by the proper shipping name, and are classified, packaged, marked and labeled/placarded, and are in all respects in proper condition for transport according to applicable international and national governmental regulations. If export shipment and I am the Primary Exporter, I certify that the contents of this consignment conform to the terms of the attached EPA Acknowledgment of Consent.
I certify that the waste minimization statement identified in 40 CFR 262.27(a) (if I am a large quantity generator) or (b) (if I am a small quantity generator) is true.

Generator's/Offeror's Printed/Typed Name: DONN WILLIAMS
Signature:
Month: 9 Day: 14 Year: 15

INT'L

16. International Shipments ☐ Import to U.S. ☐ Export from U.S. Port of entry/exit:
Transporter signature (for exports only): Date leaving U.S.:

TRANSPORTER

17. Transporter Acknowledgment of Receipt of Materials

Transporter 1 Printed/Typed Name: Clarence C Holt
Signature:
Month: 09 Day: 28 Year: 15

Transporter 2 Printed/Typed Name:
Signature:
Month: Day: Year:

DESIGNATED FACILITY

18. Discrepancy

18a. Discrepancy Indication Space ☐ Quantity ☐ Type ☐ Residue ☐ Partial Rejection ☐ Full Rejection

Manifest Reference Number:

18b. Alternate Facility (or Generator)
U.S. EPA ID Number:
Facility's Phone:

18c. Signature of Alternate Facility (or Generator)
Month: Day: Year:

19. Hazardous Waste Report Management Method Codes (i.e., codes for hazardous waste treatment, disposal, and recycling systems)

1.	2.	3.	4.

20. Designated Facility Owner or Operator: Certification of receipt of hazardous materials covered by the manifest except as noted in item 18a

Printed/Typed Name:
Signature:
Month: Day: Year:

EPA Form 8700-22 (Rev. 3-05) Previous editions are obsolete.

GENERATOR'S INITIAL COPY

CWMI

Please print or type. (Form designed for use on elite (12-pitch) typewriter.) Form Approved. OMB No. 2050-0039

UNIFORM HAZARDOUS WASTE MANIFEST

1. Generator ID Number: EXEMPT
2. Page 1 of
3. Emergency Response Phone: 601 807 1187
4. Manifest Tracking Number: 002916268 GBF

GENERATOR

5. Generator's Name and Mailing Address
SOLUTIA, INC - ANNISTON PCB SITE
702 CLYDESDALE AVE
ANNISTON AL 36201
Generator's Phone: (601)807-1187

Generator's Site Address (if different than mailing address)
ANNISTON PCB SITE
0 PARKWIN
ANNISTON AL 36201

6. Transporter 1 Company Name — U.S. EPA ID Number

7. Transporter 2 Company Name — U.S. EPA ID Number

8. Designated Facility Name and Site Address
CHEMICAL WASTE MANAGEMENT, INC.
HIGHWAY 17 NORTH, MILE MARKER 163
EMELLE AL 35459
Facility's Phone: (205)652-9721
U.S. EPA ID Number: ALD000622464

9a. HM	9b. U.S. DOT Description (including Proper Shipping Name, Hazard Class, ID Number, and Packing Group (if any))	10. Containers No.	10. Containers Type	11. Total Quantity	12. Unit Wt./Vol.	13. Waste Codes
X	1. UN3432,RQ,POLYCHLORINATED BIPHENYLS,SOLID,9,III CM9879	001	CM	18000	K	
	2.					
	3.					
	4.					

14. Special Handling Instructions and Additional Information
1. CM9879 ERG-171 PO#: 4155786 OSD: 3/11/16 Box 6032

ERI PROVIDER: CHEMTREC (CONTRACT CCN24117)

15. **GENERATOR'S/OFFEROR'S CERTIFICATION:** I hereby declare that the contents of this consignment are fully and accurately described above by the proper shipping name, and are classified, packaged, marked and labeled/placarded, and are in all respects in proper condition for transport according to applicable international and national governmental regulations. If export shipment and I am the Primary Exporter, I certify that the contents of this consignment conform to the terms of the attached EPA Acknowledgment of Consent.
I certify that the waste minimization statement identified in 40 CFR 262.27(a) (if I am a large quantity generator) or (b) (if I am a small quantity generator) is true.

Generator's/Offeror's Printed/Typed Name: DONN WILLIAMS — Signature — Month: 3 Day: 11 Year: 16

INT'L

16. International Shipments ☐ Import to U.S. ☐ Export from U.S. Port of entry/exit:
Transporter signature (for exports only): Date leaving U.S.:

TRANSPORTER

17. Transporter Acknowledgment of Receipt of Materials

Transporter 1 Printed/Typed Name — Signature — Month: 3 Day: 11 Year: 16

Transporter 2 Printed/Typed Name — Signature — Month — Day — Year

DESIGNATED FACILITY

18. Discrepancy

18a. Discrepancy Indication Space ☐ Quantity ☐ Type ☐ Residue ☐ Partial Rejection ☐ Full Rejection

Manifest Reference Number:

18b. Alternate Facility (or Generator) — U.S. EPA ID Number

Facility's Phone:

18c. Signature of Alternate Facility (or Generator) — Month — Day — Year

19. Hazardous Waste Report Management Method Codes (i.e., codes for hazardous waste treatment, disposal, and recycling systems)

1.	2.	3.	4.

20. Designated Facility Owner or Operator: Certification of receipt of hazardous materials covered by the manifest except as noted in Item 18a

Printed/Typed Name — Signature — Month — Day — Year

EPA Form 8700-22 (Rev. 3-05) Previous editions are obsolete.

GENERATOR'S INITIAL COPY

CWMI

Please print or type. (Form designed for use on elite (12-pitch) typewriter.) Form Approved. OMB No. 2050-0039

UNIFORM HAZARDOUS WASTE MANIFEST

1. Generator ID Number: EXEMPT
2. Page 1 of
3. Emergency Response Phone: 1601 617 1187
4. Manifest Tracking Number: 002916288 GBF

GENERATOR

5. Generator's Name and Mailing Address
SOLUTIA, INC - ANNISTON PCB SITE
702 CLYDESDALE AVE
ANNISTON AL 36201
Generator's Phone: (601)607 1187

Generator's Site Address (if different than mailing address)
ANNISTON PCB SITE
0 PARKWIN
ANNISTON AL 36201

6. Transporter 1 Company Name: Robbie D. Wood Inc
U.S. EPA ID Number: ACD067138871

7. Transporter 2 Company Name
U.S. EPA ID Number

8. Designated Facility Name and Site Address
CHEMICAL WASTE MANAGEMENT, INC.
HIGHWAY 17 NORTH, MILE MARKER 163
EMELLE AL 35459
Facility's Phone: (205)652-9721
U.S. EPA ID Number: ALD000622464

9a. HM	9b. U.S. DOT Description (including Proper Shipping Name, Hazard Class, ID Number, and Packing Group (if any))	10. Containers No.	10. Containers Type	11. Total Quantity	12. Unit Wt./Vol.	13. Waste Codes
X	1. UN3432,RQ,POLYCHLORINATED BIPHENYLS,SOLID,9,III CM9879	001	CM	18000	K	
	2.					
	3.					
	4.					

14. Special Handling Instructions and Additional Information
1. CM9879 ERG-171 PO#: 42557866 OSD: 3/3/16 Box 25113
ERI PROVIDER: CHEMTREC (CONTRACT CCN24117)

15. **GENERATOR'S/OFFEROR'S CERTIFICATION:** I hereby declare that the contents of this consignment are fully and accurately described above by the proper shipping name, and are classified, packaged, marked and labeled/placarded, and are in all respects in proper condition for transport according to applicable international and national governmental regulations. If export shipment and I am the Primary Exporter, I certify that the contents of this consignment conform to the terms of the attached EPA Acknowledgment of Consent.
I certify that the waste minimization statement identified in 40 CFR 262.27(a) (if I am a large quantity generator) or (b) (if I am a small quantity generator) is true.

Generator's/Offeror's Printed/Typed Name: DONN WILLIAMS
Signature: D.W.
Month: 3 Day: 3 Year: 16

INT'L

16. International Shipments ☐ Import to U.S. ☐ Export from U.S. Port of entry/exit:
Transporter signature (for exports only): Date leaving U.S.:

TRANSPORTER

17. Transporter Acknowledgment of Receipt of Materials

Transporter 1 Printed/Typed Name: Earnest Winston
Signature: Earnest Winston
Month: 3 Day: 3 Year: 16

Transporter 2 Printed/Typed Name
Signature
Month Day Year

DESIGNATED FACILITY

18. Discrepancy

18a. Discrepancy Indication Space ☐ Quantity ☐ Type ☐ Residue ☐ Partial Rejection ☐ Full Rejection

Manifest Reference Number:

18b. Alternate Facility (or Generator)
U.S. EPA ID Number
Facility's Phone:

18c. Signature of Alternate Facility (or Generator)
Month Day Year

19. Hazardous Waste Report Management Method Codes (i.e., codes for hazardous waste treatment, disposal, and recycling systems)

1.	2.	3.	4.

20. Designated Facility Owner or Operator: Certification of receipt of hazardous materials covered by the manifest except as noted in Item 18a

Printed/Typed Name
Signature
Month Day Year

EPA Form 8700-22 (Rev. 3-05) Previous editions are obsolete.

APPENDIX D2

Non-Hazardous Waste Manifests

Non-Hazardous Manifest Tracking Log

Manifest Number	*Waste Origin*	*Weight (tons)*
16	Borrow Source Wood Chip Ash	15.19
17	Borrow Source Wood Chip Ash	16.25
26	Borrow Source Wood Chip Ash	17.01
27	Borrow Source Wood Chip Ash	17.36
28	Borrow Source Wood Chip Ash	13.51
29	Borrow Source Wood Chip Ash	13.45
30	Borrow Source Wood Chip Ash	14.75
32	Borrow Source Wood Chip Ash	18.51
33	Borrow Source Wood Chip Ash	17.48
34	Borrow Source Wood Chip Ash	13.73
35	Borrow Source Wood Chip Ash	17.7
36	Borrow Source Wood Chip Ash	16.24
37	Borrow Source Wood Chip Ash	17.98
38	Borrow Source Wood Chip Ash	18.93
39	Borrow Source Wood Chip Ash	19.47
18	Construction Debris	12.77

	PROJECT TOTAL	**260.33**

EC Waste- NON-HAZARDOUS MANIFEST

NON-HAZARDOUS MANIFEST	1. Generator's US EPA ID No. ALD004019048 Manifest Doc No.	2. Page 1 of 1	

GENERATOR

3. Generator's Mailing Address:	Generator's Site Address (If different than mailing):	A. Manifest Number 16	
SOLUTIA INC (ANNISTON PCB SITE) 702 CLYDESDALE AVE ANNISTON, AL 36201	ANNISTON PCB SITE ANNISTON, AL	B. State Generator's ID	
4. Generator's Phone 256-231-8483			

5. Transporter 1 Company Name	6. US EPA ID Number	C. State Transporter's ID 894245-DOT
EARTH SERVICES		D. Transporter's Phone 256-770-7290
7. Transporter 2 Company Name	8. US EPA ID Number	E. State Transporter's ID
		F. Transporter's Phone

9. Designated Facility Name and Site Address	10. US EPA ID Number	G. State Facility ID
THREE CORNERS REGIONAL LANDFILL 2205 COUNTY ROAD 6 PIEDMONT, AL 36272		H. State Facility Phone 256-447-1881

11. Description of Waste Materials	12. Containers No.	12. Containers Type	13. Total Quantity	14. Unit Wt./Vol.	I. Misc. Comments
A. NON-HAZARDOUS IMPACT SOIL & DEBRIS b. Exp 08/31/2015 EC WASTE Profile # CF6400		TRIAXLE DUMP			<50 PPM PCBS
b.					
c.					
d.		Type			

J. Additional Descriptions for Materials Listed Above	K. Disposal Location			
	Cell		Level	
	Grid			

15. Special Handling Instructions and Additional Information

Purchase Order # 4264454 EMERGENCY CONTACT / PHONE NO.: 251 504 1003

16. GENERATOR'S CERTIFICATE:

I hereby certify that the above-described materials are not hazardous wastes as defined by 40 CFR Part 261 or any applicable state law, have been fully and accurately described, classified and packaged and are in proper condition for transportation according to applicable regulations.

Printed Name	Signature "On behalf of"	Month	Day	Year
Jerry Hopper	Jerry A. Hopper	10	23	2015

TRANSPORTER

17. Transporter 1 Acknowledgement of Receipt of Materials

Printed Name	Signature	Month	Day	Year
		10	23	15

18. Transporter 2 Acknowledgement of Receipt of Materials

Printed Name	Signature	Month	Day	Year

FACILITY

19. Certificate of Final Treatment/Disposal

I certify, on behalf of the above listed treatment facility, that to the best of my knowledge, the above-described waste was managed in compliance with all applicable laws, regulations, permits and licenses on the dates listed above.

20. Facility Owner or Operator: Certification of receipt of non-hazardous materials covered by this manifest.

Printed Name	Signature	Month	Day	Year
Jaynean Gallman OR Naomi Caussey				

White- TREATMENT, STORAGE, DISPOSAL FACILITY COPY Blue- GENERATOR #2 COPY Yellow- GENERATOR #1 COPY

Pink- FACILITY USE ONLY Gold- TRANSPORTER #1 COPY

EC Waste- NON-HAZARDOUS MANIFEST

NON-HAZARDOUS MANIFEST	1. Generator's US EPA ID No. ALD004019048 Manifest Doc No.	2. Page 1 of 1	

GENERATOR

3. Generator's Mailing Address:	Generator's Site Address (If different than mailing):	A. Manifest Number 17
SOLUTIA INC (ANNISTON PCB SITE) 702 CLYDESDALE AVE ANNISTON, AL 36201	ANNISTON PCB SITE ANNISTON, AL	B. State Generator's ID
4. Generator's Phone 256-231-8483		

5. Transporter 1 Company Name	6. US EPA ID Number	C. State Transporter's ID 894245-DOT
~~EARTH SERVICES~~ Tayk Corp.		D. Transporter's Phone ~~256-770-7290~~
7. Transporter 2 Company Name	8. US EPA ID Number	E. State Transporter's ID
		F. Transporter's Phone
9. Designated Facility Name and Site Address	10. US EPA ID Number	G. State Facility ID
THREE CORNERS REGIONAL LANDFILL 2205 COUNTY ROAD 6 PIEDMONT, AL 36272		H. State Facility Phone 256-447-1881

11. Description of Waste Materials	12. Containers No.	12. Containers Type	13. Total Quantity	14. Unit Wt./Vol.	I. Misc. Comments
A. NON-HAZARDOUS IMPACT SOIL & DEBRIS b. Exp 08/31/2015 **EC WASTE Profile #** CF6400		TRIAXLE DUMP			<50 PPM PCBS
b.					
c.					
d.		Type			

J. Additional Descriptions for Materials Listed Above	K. Disposal Location			
	Cell		Level	
	Grid			

15. Special Handling Instructions and Additional Information

Purchase Order # 4504404 EMERGENCY CONTACT / PHONE NO.: SEE 407 for #'s

16. GENERATOR'S CERTIFICATE:

I hereby certify that the above-described materials are not hazardous wastes as defined by 40 CFR Part 261 or any applicable state law, have been fully and accurately described, classified and packaged and are in proper condition for transportation according to applicable regulations.

Printed Name	Signature "On behalf of"	Month	Day	Year
Jerry Hopper Jerry Hopper	Jerry A. Hopper	10	23	2015

TRANSPORTER

17. Transporter 1 Acknowledgement of Receipt of Materials

Printed Name	Signature	Month	Day	Year

18. Transporter 2 Acknowledgement of Receipt of Materials

Printed Name	Signature	Month	Day	Year

FACILITY

19. Certificate of Final Treatment/Disposal

I certify, on behalf of the above listed treatment facility, that to the best of my knowledge, the above-described waste was managed in compliance with all applicable laws, regulations, permits and licenses on the dates listed above.

20. Facility Owner or Operator: Certification of receipt of non-hazardous materials covered by this manifest.

Printed Name	Signature	Month	Day	Year
Jaynean Gallman OR Naomi Caussey				

White- TREATMENT, STORAGE, DISPOSAL FACILITY COPY Blue- GENERATOR #2 COPY Yellow- GENERATOR #1 COPY

Pink- FACILITY USE ONLY Gold- TRANSPORTER #1 COPY

EC Waste- NON-HAZARDOUS MANIFEST

NON-HAZARDOUS MANIFEST	1. Generator's US EPA ID No. / Manifest Doc No.	2. Page 1 of
	ALD004019048	1

3. Generator's Mailing Address:	Generator's Site Address (If different than mailing):	A. Manifest Number
SOLUTIA INC (ANNISTON PCB SITE) 702 CLYDESDALE AVE ANNISTON, AL 36201	ANNISTON PCB SITE ANNISTON, AL	26
4. Generator's Phone 256-231-8483		B. State Generator's ID

5. Transporter 1 Company Name	6. US EPA ID Number	C. State Transporter's ID 894245-DOT
EARTH SERVICES ~~~ Taylor Corp.		D. Transporter's Phone 256-770-7290
7. Transporter 2 Company Name	8. US EPA ID Number	E. State Transporter's ID
		F. Transporter's Phone
9. Designated Facility Name and Site Address	10. US EPA ID Number	G. State Facility ID
THREE CORNERS REGIONAL LANDFILL 2205 COUNTY ROAD 6 PIEDMONT, AL 36272		H. State Facility Phone 256-447-1881

GENERATOR

11. Description of Waste Materials	12. Containers No.	12. Containers Type	13. Total Quantity	14. Unit Wt./Vol.	I. Misc. Comments
A. NON-HAZARDOUS IMPACT SOIL & DEBRIS b. Exp 08/31/2015 EC WASTE Profile # CF6400		TRIAXLE DUMP			<50 PPM PCBS
b.					
c.					
d.		Type			

J. Additional Descriptions for Materials Listed Above	K. Disposal Location			
	Cell		Level	
	Grid			

15. Special Handling Instructions and Additional Information

Purchase Order # 4264048 4 EMERGENCY CONTACT / PHONE NO.: 256 819 1054

16. GENERATOR'S CERTIFICATE:

I hereby certify that the above-described materials are not hazardous wastes as defined by 40 CFR Part 261 or any applicable state law, have been fully and accurately described, classified and packaged and are in proper condition for transportation according to applicable regulations.

Printed Name	Signature "On behalf of"	Month	Day	Year
Jerry Hopper Dan W. Williams	D.W.			

TRANSPORTER

17. Transporter 1 Acknowledgement of Receipt of Materials

Printed Name	Signature	Month	Day	Year
Jerry Holt	Jerry Holt	10	22	15

18. Transporter 2 Acknowledgement of Receipt of Materials

Printed Name	Signature	Month	Day	Year

FACILITY

19. Certificate of Final Treatment/Disposal

I certify, on behalf of the above listed treatment facility, that to the best of my knowledge, the above-described waste was managed in compliance with all applicable laws, regulations, permits and licenses on the dates listed above.

20. Facility Owner or Operator: Certification of receipt of non-hazardous materials covered by this manifest.

Printed Name	Signature	Month	Day	Year
Jaynean Gallman OR Naomi Caussey				

White- TREATMENT, STORAGE, DISPOSAL FACILITY COPY
Blue- GENERATOR #2 COPY
Yellow- GENERATOR #1 COPY
Pink- FACILITY USE ONLY
Gold- TRANSPORTER #1 COPY

EC Waste- NON-HAZARDOUS MANIFEST

NON-HAZARDOUS MANIFEST	1. Generator's US EPA ID No. ALD004019048 Manifest Doc No.	2. Page 1 of 1	

GENERATOR

3. Generator's Mailing Address:	Generator's Site Address (If different than mailing):	A. Manifest Number 27
SOLUTIA INC (ANNISTON PCB SITE) 702 CLYDESDALE AVE ANNISTON, AL 36201	ANNISTON PCB SITE ANNISTON, AL	B. State Generator's ID
4. Generator's Phone 256-231-8483		

5. Transporter 1 Company Name	6. US EPA ID Number	C. State Transporter's ID 894245-DOT
EARTH SERVICES Taylor Corp.		D. Transporter's Phone 256-770-7290
7. Transporter 2 Company Name	8. US EPA ID Number	E. State Transporter's ID
		F. Transporter's Phone
9. Designated Facility Name and Site Address THREE CORNERS REGIONAL LANDFILL 2205 COUNTY ROAD 6 PIEDMONT, AL 36272	10. US EPA ID Number	G. State Facility ID H. State Facility Phone 256-447-1881

11. Description of Waste Materials	12. Containers No.	12. Containers Type	13. Total Quantity	14. Unit Wt./Vol.	I. Misc. Comments
A. NON-HAZARDOUS IMPACT SOIL & DEBRIS b. Exp 08/31/2015 EC WASTE Profile # CF6400		TRIAXLE DUMP			<50 PPM PCBS
b.					
c.					
d.		Type			

J. Additional Descriptions for Materials Listed Above	K. Disposal Location			
	Cell		Level	
	Grid			

15. Special Handling Instructions and Additional Information

Purchase Order # 4264048 4 EMERGENCY CONTACT / PHONE NO.: 256 419 1032

16. GENERATOR'S CERTIFICATE:

I hereby certify that the above-described materials are not hazardous wastes as defined by 40 CFR Part 261 or any applicable state law, have been fully and accurately described, classified and packaged and are in proper condition for transportation according to applicable regulations.

Printed Name	Signature "On behalf of"	Month	Day	Year
Jerry Hopper Don Williams	D.W.	10	22	15

TRANSPORTER

17. Transporter 1 Acknowledgement of Receipt of Materials				
Printed Name	Signature	Month	Day	Year
Jerry Hopper	Jerry Hopper	10	22	15
18. Transporter 2 Acknowledgement of Receipt of Materials				
Printed Name	Signature	Month	Day	Year

FACILITY

19. Certificate of Final Treatment/Disposal

I certify, on behalf of the above listed treatment facility, that to the best of my knowledge, the above-described waste was managed in compliance with all applicable laws, regulations, permits and licenses on the dates listed above.

20. Facility Owner or Operator: Certification of receipt of non-hazardous materials covered by this manifest.

Printed Name	Signature	Month	Day	Year
Jaynean Gallman OR Naomi Caussey				

White- TREATMENT, STORAGE, DISPOSAL FACILITY COPY Blue- GENERATOR #2 COPY Yellow- GENERATOR #1 COPY

Pink- FACILITY USE ONLY Gold- TRANSPORTER #1 COPY

Three Corners Landfill

ID: 1010 Version: 06

Original Ticket # 508861.8860

WASTE

Customer Name	WM OF EMELLE	Carrier	WM OF EMELLE
Ticket Date	10/22/2015	Vehicle #	3
Payment Type	Accounts	Container	Disposal
Manual Ticket #		Driver	
Route		Check/CC #	
Hauling Ticket#		Gen EPA ID	
Manifest	MANIFEST#28	Billing #	105886
Destination	2205 COUNTY ROAD 6	Grid	
Purchase Order #	EASTMAN	Volume	
Profile	_SPW SPECIAL WASTE		
Generator	WM OF EMELLE		

	Time	Scale	Operator	Inbound		
In	10/22/2015 12:31		manager		Gross	56,460.00 lb
Out	10/22/2015 12:31	NONE	manager		Tare	29,440.00 lb
					Net	27,020.00 lb
					Qty.	13.51 t

Comments: PR#CF6400 NON-HAZ IMPACT SOIL AND DEBRIS
CALHOUN COUNTY
HAULED BY TAYLOR CORP

Product	LD%	Qty	UOM	Original
SPECIAL WASTE	100	13.51	t	
ALABAMA DEPARTMENT OF ENV	100	13.51	t	
REGULATORY COST RECOVERY	100	1.00	t	
ENVIRONMENTAL FEE	100	1.00	t	

Driver's Signature

EC Waste- NON-HAZARDOUS MANIFEST

NON-HAZARDOUS MANIFEST	1. Generator's US EPA ID No. ALD004019048	Manifest Doc No.	2. Page 1 of 1

3. Generator's Mailing Address:	Generator's Site Address (if different than mailing):	A. Manifest Number
SOLUTIA INC (ANNISTON PCB SITE) 702 CLYDESDALE AVE ANNISTON, AL 36201	ANNISTON PCB SITE ANNISTON, AL	28
4. Generator's Phone 256-231-8483		B. State Generator's ID

5. Transporter 1 Company Name	6. US EPA ID Number	
EARTH SERVICES Taylor Care		C. State Transporter's ID 894245-DOT
		D. Transporter's Phone 256-770-7290
7. Transporter 2 Company Name	8. US EPA ID Number	
		E. State Transporter's ID
		F. Transporter's Phone
9. Designated Facility Name and Site Address THREE CORNERS REGIONAL LANDFILL 2205 COUNTY ROAD 6 PIEDMONT, AL 36272	10. US EPA ID Number	
		G. State Facility ID
		H. State Facility Phone 256-447-1881

GENERATOR

11. Description of Waste Materials	12. Containers No.	12. Containers Type	13. Total Quantity	14. Unit Wt./Vol.	I. Misc. Comments
A. NON-HAZARDOUS IMPACT SOIL & DEBRIS b. Exp 08/31/2017 EC WASTE Profile # CF6400		TRIAXLE DUMP			<50 PPM PCBS
b.					13.51 Tons
c.					
d.		Type			

J. Additional Descriptions for Materials Listed Above	K. Disposal Location			
	Cell		Level	
	Grid			

15. Special Handling Instructions and Additional Information

Purchase Order # 42640484 EMERGENCY CONTACT / PHONE NO.: 256 419 1032

16. GENERATOR'S CERTIFICATE:

I hereby certify that the above-described materials are not hazardous wastes as defined by 40 CFR Part 261 or any applicable state law, have been fully and accurately described, classified and packaged and are in proper condition for transportation according to applicable regulations.

Printed Name	Signature "On behalf of"	Month	Day	Year
Jerry Hopper Don Williams	[signature]	[illegible]	[illegible]	[illegible]

TRANSPORTER

17. Transporter 1 Acknowledgement of Receipt of Materials

Printed Name	Signature	Month	Day	Year
[illegible]				

18. Transporter 2 Acknowledgement of Receipt of Materials

Printed Name	Signature	Month	Day	Year

FACILITY

19. Certificate of Final Treatment/Disposal

I certify, on behalf of the above listed treatment facility, that to the best of my knowledge, the above-described waste was managed in compliance with all applicable laws, regulations, permits and licenses on the dates listed above.

20. Facility Owner or Operator: Certification of receipt of non-hazardous materials covered by this manifest.

Printed Name	Signature	Month	Day	Year
Jaynean Gallman OR Naomi Caussey	Naomi Caussey	10	30	15

White- TREATMENT, STORAGE, DISPOSAL FACILITY COPY Blue- GENERATOR #2 COPY Yellow- GENERATOR #1 COPY

Pink- FACILITY USE ONLY Gold- TRANSPORTER #1 COPY

EC Waste- NON-HAZARDOUS MANIFEST

NON-HAZARDOUS MANIFEST	1. Generator's US EPA ID No. / Manifest Doc No.	2. Page 1 of
	ALD004019048	1

3. Generator's Mailing Address:	Generator's Site Address (If different than mailing):	A. Manifest Number
SOLUTIA INC (ANNISTON PCB SITE) 702 CLYDESDALE AVE ANNISTON, AL 36201 4. Generator's Phone 256-231-8483	ANNISTON PCB SITE ANNISTON, AL	28 B. State Generator's ID

5. Transporter 1 Company Name	6. US EPA ID Number	C. State Transporter's ID 894245-DOT D. Transporter's Phone 256-770-7290
~~EARTH SERVICES~~ Taylor Corp,		
7. Transporter 2 Company Name	**8. US EPA ID Number**	E. State Transporter's ID F. Transporter's Phone

9. Designated Facility Name and Site Address	10. US EPA ID Number	G. State Facility ID H. State Facility Phone 256-447-1881
THREE CORNERS REGIONAL LANDFILL 2205 COUNTY ROAD 6 PIEDMONT, AL 36272		

GENERATOR

11. Description of Waste Materials	12. Containers No.	12. Containers Type	13. Total Quantity	14. Unit Wt./Vol.	I. Misc. Comments
A. NON-HAZARDOUS IMPACT SOIL & DEBRIS b. Exp 08/31/2019 EC WASTE Profile # CF6400		TRIAXLE DUMP			<50 PPM PCBS
b.					
c.					
d.		Type			

J. Additional Descriptions for Materials Listed Above	K. Disposal Location			
	Cell		Level	
	Grid			

15. Special Handling Instructions and Additional Information

Purchase Order # 42640484 EMERGENCY CONTACT / PHONE NO.: 256 419 1082

16. GENERATOR'S CERTIFICATE:

I hereby certify that the above-described materials are not hazardous wastes as defined by 40 CFR Part 261 or any applicable state law, have been fully and accurately described, classified and packaged and are in proper condition for transportation according to applicable regulations.

Printed Name	Signature "On behalf of"	Month	Day	Year
~~Jerry Hopper~~ Don Williams	D.W.	10	22	15

TRANSPORTER

17. Transporter 1 Acknowledgement of Receipt of Materials

Printed Name	Signature	Month	Day	Year
Kelly Fuller	Kelly Fuller	10	22	15

18. Transporter 2 Acknowledgement of Receipt of Materials

Printed Name	Signature	Month	Day	Year

FACILITY

19. Certificate of Final Treatment/Disposal

I certify, on behalf of the above listed treatment facility, that to the best of my knowledge, the above-described waste was managed in compliance with all applicable laws, regulations, permits and licenses on the dates listed above.

20. Facility Owner or Operator: Certification of receipt of non-hazardous materials covered by this manifest.

Printed Name	Signature	Month	Day	Year
Jaynean Gallman OR Naomi Caussey				

White- TREATMENT, STORAGE, DISPOSAL FACILITY COPY Blue- GENERATOR #2 COPY Yellow- GENERATOR #1 COPY

Pink- FACILITY USE ONLY Gold- TRANSPORTER #1 COPY

EC Waste- NON-HAZARDOUS MANIFEST

NON-HAZARDOUS MANIFEST	1. Generator's US EPA ID No. ALD004019048 Manifest Doc No.	2. Page 1 of 1	

3. Generator's Mailing Address:	Generator's Site Address (if different than mailing):	A. Manifest Number	
SOLUTIA INC (ANNISTON PCB SITE) 702 CLYDESDALE AVE ANNISTON, AL 36201	ANNISTON PCB SITE ANNISTON, AL	28	
4. Generator's Phone 256-231-8483		B. State Generator's ID	

5. Transporter 1 Company Name	6. US EPA ID Number	C. State Transporter's ID 894245-DOT
~~EARTH SERVICES~~ Taylor-Core,		D. Transporter's Phone 256-770-7290
7. Transporter 2 Company Name	8. US EPA ID Number	E. State Transporter's ID
		F. Transporter's Phone
9. Designated Facility Name and Site Address THREE CORNERS REGIONAL LANDFILL 2205 COUNTY ROAD 6 PIEDMONT, AL 36272	10. US EPA ID Number	G. State Facility ID H. State Facility Phone 256-447-1881

GENERATOR

11. Description of Waste Materials	12. Containers No.	12. Containers Type	13. Total Quantity	14. Unit Wt./Vol.	I. Misc. Comments
A. NON-HAZARDOUS IMPACT SOIL & DEBRIS b. Exp 08/31/2013 EC WASTE Profile # CF6400		TRIAXLE DUMP			<50 PPM PCBS
b.					
c.					
d.		Type			

J. Additional Descriptions for Materials Listed Above	K. Disposal Location			
	Cell		Level	
	Grid			

15. Special Handling Instructions and Additional Information

Purchase Order # 4264048 4 EMERGENCY CONTACT / PHONE NO.: 256 419 6052

16. GENERATOR'S CERTIFICATE:

I hereby certify that the above-described materials are not hazardous wastes as defined by 40 CFR Part 261 or any applicable state law, have been fully and accurately described, classified and packaged and are in proper condition for transportation according to applicable regulations.

Printed Name	Signature "On behalf of"	Month	Day	Year
~~Jerry Hopper~~ Don Williams	DWilliams	10	22	15

TRANSPORTER

17. Transporter 1 Acknowledgement of Receipt of Materials				
Printed Name	Signature	Month	Day	Year
Kelly Fuller	Kelly Fuller	10	22	15
18. Transporter 2 Acknowledgement of Receipt of Materials				
Printed Name	Signature	Month	Day	Year

FACILITY

19. Certificate of Final Treatment/Disposal

I certify, on behalf of the above listed treatment facility, that to the best of my knowledge, the above-described waste was managed in compliance with all applicable laws, regulations, permits and licenses on the dates listed above.

20. Facility Owner or Operator: Certification of receipt of non-hazardous materials covered by this manifest.

Printed Name	Signature	Month	Day	Year
Jaynean Gallman OR Naomi Caussey				

White- TREATMENT, STORAGE, DISPOSAL FACILITY COPY
Blue- GENERATOR #2 COPY
Yellow- GENERATOR #1 COPY
Pink- FACILITY USE ONLY
Gold- TRANSPORTER #1 COPY

EC Waste- NON-HAZARDOUS MANIFEST

NON-HAZARDOUS MANIFEST	1. Generator's US EPA ID No. / Manifest Doc No.	2. Page 1 of
	ALD004019048	1

3. Generator's Mailing Address:	Generator's Site Address (If different than mailing):	A. Manifest Number
SOLUTIA INC (ANNISTON PCB SITE) 702 CLYDESDALE AVE ANNISTON, AL 36201	ANNISTON PCB SITE ANNISTON, AL	29
4. Generator's Phone 256-231-8483		B. State Generator's ID

5. Transporter 1 Company Name	6. US EPA ID Number	C. State Transporter's ID 894245-DOT
~~EARTH SERVICES~~ Taylor Corp.		D. Transporter's Phone 256-770-7290
7. Transporter 2 Company Name	8. US EPA ID Number	E. State Transporter's ID
		F. Transporter's Phone
9. Designated Facility Name and Site Address	10. US EPA ID Number	G. State Facility ID
THREE CORNERS REGIONAL LANDFILL 2205 COUNTY ROAD 6 PIEDMONT, AL 36272		H. State Facility Phone 256-447-1881

GENERATOR

11. Description of Waste Materials	12. Containers No.	12. Containers Type	13. Total Quantity	14. Unit Wt./Vol.	I. Misc. Comments
A. NON-HAZARDOUS IMPACT SOIL & DEBRIS b. Exp 08/31/2015 EC WASTE Profile # CF6400		TRIAXLE DUMP			<50 PPM PCBS
b.					
c.					
d.		Type			

J. Additional Descriptions for Materials Listed Above	K. Disposal Location			
	Cell		Level	
	Grid			

15. Special Handling Instructions and Additional Information

Purchase Order # 4264048H EMERGENCY CONTACT / PHONE NO.: 256 419 1082

16. GENERATOR'S CERTIFICATE:

I hereby certify that the above-described materials are not hazardous wastes as defined by 40 CFR Part 261 or any applicable state law, have been fully and accurately described, classified and packaged and are in proper condition for transportation according to applicable regulations.

Printed Name	Signature "On behalf of"	Month	Day	Year
~~Jerry Hopper~~ Don Williams	D. Williams	10	22	15

TRANSPORTER

17. Transporter 1 Acknowledgement of Receipt of Materials

Printed Name	Signature	Month	Day	Year
Kelly Fuller	Kelly Fuller	10	22	15

18. Transporter 2 Acknowledgement of Receipt of Materials

Printed Name	Signature	Month	Day	Year

FACILITY

19. Certificate of Final Treatment/Disposal

I certify, on behalf of the above listed treatment facility, that to the best of my knowledge, the above-described waste was managed in compliance with all applicable laws, regulations, permits and licenses on the dates listed above.

20. Facility Owner or Operator: Certification of receipt of non-hazardous materials covered by this manifest.

Printed Name	Signature	Month	Day	Year
Jaynean Gallman OR Naomi Caussey				

White- TREATMENT, STORAGE, DISPOSAL FACILITY COPY Blue- GENERATOR #2 COPY Yellow- GENERATOR #1 COPY

Pink- FACILITY USE ONLY Gold- TRANSPORTER #1 COPY

Three Corners Landfill

ID: 1010 Version: 06

Original Ticket # 508867.8866

EC WASTE

Customer Name	WM OF EMELLE	Carrier	WM OF EMELLE
Ticket Date	10/22/2015	Vehicle #	3
Payment Type	Accounts	Container	Disposal
Manual Ticket #		Driver	
Route		Check/CC #	
Hauling Ticket#		Gen EPA ID	
Manifest	MANIFEST#29	Billing #	105886
Destination	2205 COUNTY ROAD 6	Grid	
Purchase Order #	EASTMAN	Volume	
Profile	_SPW SPECIAL WASTE		
Generator	WM OF EMELLE		

	Time	Scale	Operator	Inbound		
In	10/22/2015 14:57		manager		Gross	56,340.00 lb
Out	10/22/2015 14:57	NONE	manager		Tare	29,440.00 lb
					Net	26,900.00 lb
					Qty.	13.45 t

Comments: PR#CF6400 NON-HAZ IMPACT SOIL & DEBRIS
CALHOUN COUNTY
HAULED BY TAYLOR CORP

Product	LD%	Qty	UOM	Original
SPECIAL WASTE	100	13.45	t	
ALABAMA DEPARTMENT OF ENV	100	13.45	t	
REGULATORY COST RECOVERY	100	1.00	t	
ENVIRONMENTAL FEE	100	1.00	t	

Driver's Signature

EC Waste- NON-HAZARDOUS MANIFEST

NON-HAZARDOUS MANIFEST	1. Generator's US EPA ID No. ALD004019048 Manifest Doc No.	2. Page 1 of 1	

GENERATOR

3. Generator's Mailing Address:	Generator's Site Address (If different than mailing):	A. Manifest Number	
SOLUTIA INC (ANNISTON PCB SITE) 702 CLYDESDALE AVE ANNISTON, AL 36201	ANNISTON PCB SITE ANNISTON, AL	29	B. State Generator's ID
4. Generator's Phone 256-231-8483			

5. Transporter 1 Company Name	6. US EPA ID Number	C. State Transporter's ID 894245-DOT
EARTH SERVICES Taylor-Corp.		D. Transporter's Phone 256-770-7290
7. Transporter 2 Company Name	8. US EPA ID Number	E. State Transporter's ID
		F. Transporter's Phone

9. Designated Facility Name and Site Address	10. US EPA ID Number	G. State Facility ID
THREE CORNERS REGIONAL LANDFILL 2205 COUNTY ROAD 6 PIEDMONT, AL 36272		H. State Facility Phone 256-447-1881

11. Description of Waste Materials	12. Containers No.	12. Containers Type	13. Total Quantity	14. Unit Wt./Vol.	I. Misc. Comments
a. NON-HAZARDOUS IMPACT SOIL & DEBRIS b. Exp 08/31/2015 EC WASTE Profile # CF6400		TRIAXLE DUMP			<50 PPM PCBS
b.					
c.					
d.		Type			

J. Additional Descriptions for Materials Listed Above	K. Disposal Location			
	Cell		Level	
	Grid			

15. Special Handling Instructions and Additional Information

Purchase Order # 4264048 4 EMERGENCY CONTACT / PHONE NO.: 256 419 1052

16. GENERATOR'S CERTIFICATE:

I hereby certify that the above-described materials are not hazardous wastes as defined by 40 CFR Part 261 or any applicable state law, have been fully and accurately described, classified and packaged and are in proper condition for transportation according to applicable regulations.

Printed Name	Signature "On behalf of"	Month	Day	Year
Jerry Hopper - Don Willis	E.W.	10	22	15

TRANSPORTER

17. Transporter 1 Acknowledgement of Receipt of Materials

Printed Name	Signature	Month	Day	Year

18. Transporter 2 Acknowledgement of Receipt of Materials

Printed Name	Signature	Month	Day	Year

FACILITY

19. Certificate of Final Treatment/Disposal

I certify, on behalf of the above listed treatment facility, that to the best of my knowledge, the above-described waste was managed in compliance with all applicable laws, regulations, permits and licenses on the dates listed above.

20. Facility Owner or Operator: Certification of receipt of non-hazardous materials covered by this manifest.

Printed Name	Signature	Month	Day	Year
Jaynean Gallman OR Naomi Caussey				

White- TREATMENT, STORAGE, DISPOSAL FACILITY COPY Blue- GENERATOR #2 COPY Yellow- GENERATOR #1 COPY

Pink- FACILITY USE ONLY Gold- TRANSPORTER #1 COPY

EC Waste- NON-HAZARDOUS MANIFEST

NON-HAZARDOUS MANIFEST	1. Generator's US EPA ID No. ALD004019048 Manifest Doc No.	2. Page 1 of 1	

GENERATOR

3. Generator's Mailing Address:	Generator's Site Address (If different than mailing):	A. Manifest Number	
SOLUTIA INC (ANNISTON PCB SITE) 702 CLYDESDALE AVE ANNISTON, AL 36201	ANNISTON PCB SITE ANNISTON, AL	29	
4. Generator's Phone 256-231-8483		B. State Generator's ID	

5. Transporter 1 Company Name	6. US EPA ID Number	C. State Transporter's ID 894245-DOT
~~EARTH SERVICES~~ Taylor Corp.		D. Transporter's Phone 256-770-7290
7. Transporter 2 Company Name	8. US EPA ID Number	E. State Transporter's ID
		F. Transporter's Phone
9. Designated Facility Name and Site Address THREE CORNERS REGIONAL LANDFILL 2205 COUNTY ROAD 6 PIEDMONT, AL 36272	10. US EPA ID Number	G. State Facility ID
		H. State Facility Phone 256-447-1881

11. Description of Waste Materials	12. Containers No.	12. Containers Type	13. Total Quantity	14. Unit Wt./Vol.	I. Misc. Comments
A. NON-HAZARDOUS IMPACT SOIL & DEBRIS b. Exp 08/31/2017 EC WASTE Profile # CF6400		TRIAXLE DUMP			<50 PPM PCBS
b.					13.45 Tons
c.					
d.		Type			

J. Additional Descriptions for Materials Listed Above	K. Disposal Location			
	Cell		Level	
	Grid			

15. Special Handling Instructions and Additional Information

Purchase Order # 4264048 4 EMERGENCY CONTACT / PHONE NO.: 256 419 1082

16. GENERATOR'S CERTIFICATE:

I hereby certify that the above-described materials are not hazardous wastes as defined by 40 CFR Part 261 or any applicable state law, have been fully and accurately described, classified and packaged and are in proper condition for transportation according to applicable regulations.

Printed Name	Signature "On behalf of"	Month	Day	Year
~~Jerry Hopper~~ Don Williams	D.W.	10	22	15

TRANSPORTER

17. Transporter 1 Acknowledgement of Receipt of Materials

Printed Name	Signature	Month	Day	Year
Kelly Puller	Kelly Puller	10	22	15

18. Transporter 2 Acknowledgement of Receipt of Materials

Printed Name.	Signature	Month	Day	Year

FACILITY

19. Certificate of Final Treatment/Disposal

I certify, on behalf of the above listed treatment facility, that to the best of my knowledge, the above-described waste was managed in compliance with all applicable laws, regulations, permits and licenses on the dates listed above.

20. Facility Owner or Operator: Certification of receipt of non-hazardous materials covered by this manifest.

Printed Name	Signature	Month	Day	Year
Jaynean Gallman OR Naomi Caussey	Naomi Caussey	10	22	15

White- TREATMENT, STORAGE, DISPOSAL FACILITY COPY
Blue- GENERATOR #2 COPY
Yellow- GENERATOR #1 COPY
Pink- FACILITY USE ONLY
Gold- TRANSPORTER #1 COPY

EC Waste- NON-HAZARDOUS MANIFEST

NON-HAZARDOUS MANIFEST	1. Generator's US EPA ID No. ALD004019048	Manifest Doc No.	2. Page 1 of 1

3. Generator's Mailing Address:	Generator's Site Address (If different than mailing):	A. Manifest Number
SOLUTIA INC (ANNISTON PCB SITE) 702 CLYDESDALE AVE ANNISTON, AL 36201	ANNISTON PCB SITE ANNISTON, AL	30
4. Generator's Phone 256-231-8483		B. State Generator's ID

5. Transporter 1 Company Name	6. US EPA ID Number	
EARTH SERVICES Taylor Corp		C. State Transporter's ID 894245-DOT
		D. Transporter's Phone 256-770-7290
7. Transporter 2 Company Name	8. US EPA ID Number	
		E. State Transporter's ID
		F. Transporter's Phone
9. Designated Facility Name and Site Address THREE CORNERS REGIONAL LANDFILL 2205 COUNTY ROAD 6 PIEDMONT, AL 36272	10. US EPA ID Number	
		G. State Facility ID
		H. State Facility Phone 256-447-1881

GENERATOR

11. Description of Waste Materials	12. Containers No.	12. Containers Type	13. Total Quantity	14. Unit Wt./Vol.	I. Misc. Comments
A. NON-HAZARDOUS IMPACT SOIL & DEBRIS b. Exp 08/31/2017 EC WASTE Profile # CF6400		TRIAXLE DUMP			<50 PPM PCBS
b.					
c.					
d.		Type			

J. Additional Descriptions for Materials Listed Above	K. Disposal Location			
	Cell		Level	
	Grid			

15. Special Handling Instructions and Additional Information

Purchase Order # 42640484 EMERGENCY CONTACT / PHONE NO.: 256 419 [illegible]

16. GENERATOR'S CERTIFICATE:

I hereby certify that the above-described materials are not hazardous wastes as defined by 40 CFR Part 261 or any applicable state law, have been fully and accurately described, classified and packaged and are in proper condition for transportation according to applicable regulations.

Printed Name	Signature "On behalf of"	Month	Day	Year
Jerry Hopper D. Williams	[signature]	10	23	15

TRANSPORTER

17. Transporter 1 Acknowledgement of Receipt of Materials

Printed Name	Signature	Month	Day	Year
[illegible]	[illegible]	[illegible]	[illegible]	[illegible]

18. Transporter 2 Acknowledgement of Receipt of Materials

Printed Name	Signature	Month	Day	Year

FACILITY

19. Certificate of Final Treatment/Disposal

I certify, on behalf of the above listed treatment facility, that to the best of my knowledge, the above-described waste was managed in compliance with all applicable laws, regulations, permits and licenses on the dates listed above.

20. Facility Owner or Operator: Certification of receipt of non-hazardous materials covered by this manifest.

Printed Name	Signature	Month	Day	Year
Jaynean Gallman OR Naomi Caussey				

White- TREATMENT, STORAGE, DISPOSAL FACILITY COPY Blue- GENERATOR #2 COPY Yellow- GENERATOR #1 COPY

Pink- FACILITY USE ONLY Gold- TRANSPORTER #1 COPY

EC Waste- NON-HAZARDOUS MANIFEST

NON-HAZARDOUS MANIFEST	1. Generator's US EPA ID No. / Manifest Doc No.	2. Page 1 of
	ALD004019048	1

3. Generator's Mailing Address:	Generator's Site Address (If different than mailing):	A. Manifest Number
SOLUTIA INC (ANNISTON PCB SITE) 702 CLYDESDALE AVE ANNISTON, AL 36201	ANNISTON PCB SITE ANNISTON, AL	32
4. Generator's Phone 256-231-8483		B. State Generator's ID

5. Transporter 1 Company Name	6. US EPA ID Number	C. State Transporter's ID 894245-DOT
EARTH SERVICES Taylor Corp.		D. Transporter's Phone 256-770-7290
7. Transporter 2 Company Name	8. US EPA ID Number	E. State Transporter's ID
		F. Transporter's Phone
9. Designated Facility Name and Site Address	10. US EPA ID Number	G. State Facility ID
THREE CORNERS REGIONAL LANDFILL 2205 COUNTY ROAD 6 PIEDMONT, AL 36272		H. State Facility Phone 256-447-1881

GENERATOR

11. Description of Waste Materials	12. Containers No.	12. Containers Type	13. Total Quantity	14. Unit Wt./Vol.	I. Misc. Comments
A. NON-HAZARDOUS IMPACT SOIL & DEBRIS b. Exp 08/31/2017 EC WASTE Profile # CF6400		TRIAXLE DUMP			<50 PPM PCBS
b.					
c.					
d.		Type			

J. Additional Descriptions for Materials Listed Above	K. Disposal Location			
	Cell		Level	
	Grid			

15. Special Handling Instructions and Additional Information

Purchase Order # 4264048 4 EMERGENCY CONTACT / PHONE NO.: 256 414 1032

16. GENERATOR'S CERTIFICATE:

I hereby certify that the above-described materials are not hazardous wastes as defined by 40 CFR Part 261 or any applicable state law, have been fully and accurately described, classified and packaged and are in proper condition for transportation according to applicable regulations.

Printed Name	Signature "On behalf of"	Month	Day	Year
Jerry Hopper Don Williams	D.W.	10	22	15

TRANSPORTER

17. Transporter 1 Acknowledgement of Receipt of Materials

Printed Name	Signature	Month	Day	Year

18. Transporter 2 Acknowledgement of Receipt of Materials

Printed Name	Signature	Month	Day	Year
Tony Bryant	Tony Bryant	10	22	15

FACILITY

19. Certificate of Final Treatment/Disposal

I certify, on behalf of the above listed treatment facility, that to the best of my knowledge, the above-described waste was managed in compliance with all applicable laws, regulations, permits and licenses on the dates listed above.

20. Facility Owner or Operator: Certification of receipt of non-hazardous materials covered by this manifest.

Printed Name	Signature	Month	Day	Year
Jaynean Gallman OR Naomi Caussey				

White- TREATMENT, STORAGE, DISPOSAL FACILITY COPY
Blue- GENERATOR #2 COPY
Yellow- GENERATOR #1 COPY
Pink- FACILITY USE ONLY
Gold- TRANSPORTER #1 COPY

EC WASTE

Three Corners Landfill

ID: 1010 Version: 06

Original Ticket # 508866.8865

Customer Name	WM OF EMELLE	Carrier	WM OF EMELLE
Ticket Date	10/22/2015	Vehicle #	2
Payment Type	Accounts	Container	Disposal
Manual Ticket #		Driver	
Route		Check/CC #	
Hauling Ticket#		Gen EPA ID	
Manifest	MANIFEST#32	Billing #	105886
Destination	2205 COUNTY ROAD 6	Grid	
Purchase Order #	EASTMAN	Volume	
Profile	_SPW SPECIAL WASTE		
Generator	WM OF EMELLE		

	Time	Scale	Operator	Inbound		
In	10/22/2015 14:52		manager		Gross	66,380.00 lb
Out	10/22/2015 14:52	NONE	manager		Tare	29,360.00 lb
					Net	37,020.00 lb
					Qty.	18.51 t

Comments: PR#CF6400 NON-HAZ IMPACT SOIL AND DEBRIS
CALHOUN COUNTY
HAULED BY TAYLOR CORP

Product	LD%	Qty	UOM	
SPECIAL WASTE	100	18.51	t	Original
ALABAMA DEPARTMENT OF ENV	100	18.51	t	
REGULATORY COST RECOVERY	100	1.00	t	
ENVIRONMENTAL FEE	100	1.00	t	

Driver's Signature

EC Waste- NON-HAZARDOUS MANIFEST

NON-HAZARDOUS MANIFEST	1. Generator's US EPA ID No. ALD004019048 Manifest Doc No.	2. Page 1 of 1	

GENERATOR

3. Generator's Mailing Address:	Generator's Site Address (If different than mailing):	A. Manifest Number	
SOLUTIA INC (ANNISTON PCB SITE) 702 CLYDESDALE AVE ANNISTON, AL 36201	ANNISTON PCB SITE ANNISTON, AL	32	
4. Generator's Phone 256-231-8483		B. State Generator's ID	

5. Transporter 1 Company Name	6. US EPA ID Number	C. State Transporter's ID 894245-DOT
~~EARTH SERVICES~~ Taylor Corp.		D. Transporter's Phone 256-770-7290
7. Transporter 2 Company Name	8. US EPA ID Number	E. State Transporter's ID
		F. Transporter's Phone

9. Designated Facility Name and Site Address	10. US EPA ID Number	G. State Facility ID
THREE CORNERS REGIONAL LANDFILL 2205 COUNTY ROAD 6 PIEDMONT, AL 36272		H. State Facility Phone 256-447-1881

11. Description of Waste Materials	12. Containers No.	12. Containers Type	13. Total Quantity	14. Unit Wt./Vol.	I. Misc. Comments
A. NON-HAZARDOUS IMPACT SOIL & DEBRIS b. Exp 08/31/2015 EC WASTE Profile # CF6400		TRIAXLE DUMP			<50 PPM PCBS
b.					185 TONS
c.					
d.		Type			

J. Additional Descriptions for Materials Listed Above	K. Disposal Location			
	Cell		Level	
	Grid			

15. Special Handling Instructions and Additional Information

Purchase Order # 4640484 EMERGENCY CONTACT / PHONE NO.: 256 419 1082

16. GENERATOR'S CERTIFICATE:

I hereby certify that the above-described materials are not hazardous wastes as defined by 40 CFR Part 261 or any applicable state law, have been fully and accurately described, classified and packaged and are in proper condition for transportation according to applicable regulations.

Printed Name	Signature "On behalf of"	Month	Day	Year
~~Jerry Hopper~~ Don Williams	D.W. Williams	10	22	15

TRANSPORTER

17. Transporter 1 Acknowledgement of Receipt of Materials

Printed Name	Signature	Month	Day	Year

18. Transporter 2 Acknowledgement of Receipt of Materials

Printed Name	Signature	Month	Day	Year
Tony Bryant	Tony Bryant	10	22	15

FACILITY

19. Certificate of Final Treatment/Disposal

I certify, on behalf of the above listed treatment facility, that to the best of my knowledge, the above-described waste was managed in compliance with all applicable laws, regulations, permits and licenses on the dates listed above.

20. Facility Owner or Operator: Certification of receipt of non-hazardous materials covered by this manifest.

Printed Name	Signature	Month	Day	Year
Jaynean Gallman OR Naomi Caussey	Naomi Caussey	10	22	15

White- TREATMENT, STORAGE, DISPOSAL FACILITY COPY Blue- GENERATOR #2 COPY Yellow- GENERATOR #1 COPY

Pink- FACILITY USE ONLY Gold- TRANSPORTER #1 COPY

EC Waste- NON-HAZARDOUS MANIFEST

NON-HAZARDOUS MANIFEST	1. Generator's US EPA ID No. ALD004019048 Manifest Doc No.	2. Page 1 of 1	

GENERATOR

3. Generator's Mailing Address:	Generator's Site Address (If different than mailing):	A. Manifest Number
SOLUTIA INC (ANNISTON PCB SITE) 702 CLYDESDALE AVE ANNISTON, AL 36201 4. Generator's Phone 256-231-8483	ANNISTON PCB SITE ANNISTON, AL	33 B. State Generator's ID

5. Transporter 1 Company Name	6. US EPA ID Number	C. State Transporter's ID 894245-DOT D. Transporter's Phone 256-770-7290
EARTH SERVICES Taylor-Corp.		
7. Transporter 2 Company Name	**8. US EPA ID Number**	E. State Transporter's ID F. Transporter's Phone
9. Designated Facility Name and Site Address	**10. US EPA ID Number**	G. State Facility ID H. State Facility Phone 256-447-1881
THREE CORNERS REGIONAL LANDFILL 2205 COUNTY ROAD 6 PIEDMONT, AL 36272		

11. Description of Waste Materials	12. Containers No.	12. Containers Type	13. Total Quantity	14. Unit Wt./Vol.	I. Misc. Comments
A. NON-HAZARDOUS IMPACT SOIL & DEBRIS b. Exp 08/31/2013 EC WASTE Profile # CF6400		TRIAXLE DUMP			<50 PPM PCBS
b.					
c.					
d.		Type			

J. Additional Descriptions for Materials Listed Above	K. Disposal Location			
	Cell		Level	
	Grid			

15. Special Handling Instructions and Additional Information

Purchase Order # 4264084 EMERGENCY CONTACT / PHONE NO.:

16. GENERATOR'S CERTIFICATE:

I hereby certify that the above-described materials are not hazardous wastes as defined by 40 CFR Part 261 or any applicable state law, have been fully and accurately described, classified and packaged and are in proper condition for transportation according to applicable regulations.

Printed Name	Signature "On behalf of"	Month	Day	Year
Jerry Hopper Don Williams	D.W.	10	24	15

TRANSPORTER

17. Transporter 1 Acknowledgement of Receipt of Materials

Printed Name	Signature	Month	Day	Year
Jerry Holt	Jerry Holt			

18. Transporter 2 Acknowledgement of Receipt of Materials

Printed Name	Signature	Month	Day	Year

FACILITY

19. Certificate of Final Treatment/Disposal

I certify, on behalf of the above listed treatment facility, that to the best of my knowledge, the above-described waste was managed in compliance with all applicable laws, regulations, permits and licenses on the dates listed above.

20. Facility Owner or Operator: Certification of receipt of non-hazardous materials covered by this manifest.

Printed Name	Signature	Month	Day	Year
Jaynean Gallman OR Naomi Caussey				

White- TREATMENT, STORAGE, DISPOSAL FACILITY COPY Blue- GENERATOR #2 COPY Yellow- GENERATOR #1 COPY

Pink- FACILITY USE ONLY Gold- TRANSPORTER #1 COPY

Three Corners Landfill

ID: 1010 Version: 06

Original Ticket # 508847.8846

Customer Name	WM OF EMELLE	Carrier	WM OF EMELLE
Ticket Date	10/22/2015	Vehicle #	2
Payment Type	Accounts	Container	Disposal
Manual Ticket #		Driver	
Route		Check/CC #	
Hauling Ticket#		Gen EPA ID	
Manifest	1	Billing #	105886
Destination	2205 COUNTY ROAD 6	Grid	
Purchase Order #	EASTMAN	Volume	
Profile	_SPW SPECIAL WASTE		
Generator	WM OF EMELLE		

	Time	Scale	Operator	Inbound		
In	10/22/2015 09:44		manager		Gross	65,300.00 lb
Out	10/22/2015 09:44	NONE	manager		Tare	37,840.00 lb
					Net	27,460.00 lb
					Qty.	13.73 t

Comments:CALHOUN COUNTY-TAYLOR CORP HAULING
PR#CF6400-NON HAZ IMPACT SOIL & DEBRIS

Product	LD%	Qty	UOM	Original
SPECIAL WASTE	100	13.73	t	
ALABAMA DEPARTMENT OF ENV	100	13.73	t	
REGULATORY COST RECOVERY	100	1.00	t	
ENVIRONMENTAL FEE	100	1.00	t	

Driver's Signature

EC Waste- NON-HAZARDOUS MANIFEST

NON-HAZARDOUS MANIFEST	1. Generator's US EPA ID No. ALD004019048	Manifest Doc No.	2. Page 1 of 1

3. Generator's Mailing Address:	Generator's Site Address (If different than mailing):	A. Manifest Number
SOLUTIA INC (ANNISTON PCB SITE) 702 CLYDESDALE AVE ANNISTON, AL 36201	ANNISTON PCB SITE ANNISTON, AL	34
4. Generator's Phone 256-231-8483		B. State Generator's ID

5. Transporter 1 Company Name	6. US EPA ID Number	
~~EARTH SERVICES~~ Taylor Corp.		C. State Transporter's ID 894245-DOT
		D. Transporter's Phone 256-770-7290
7. Transporter 2 Company Name	8. US EPA ID Number	
		E. State Transporter's ID
		F. Transporter's Phone
9. Designated Facility Name and Site Address THREE CORNERS REGIONAL LANDFILL 2205 COUNTY ROAD 6 PIEDMONT, AL 36272	10. US EPA ID Number	G. State Facility ID
		H. State Facility Phone 256-447-1881

GENERATOR

11. Description of Waste Materials	12. Containers No.	12. Containers Type	13. Total Quantity	14. Unit Wt./Vol.	I. Misc. Comments
A. NON-HAZARDOUS IMPACT SOIL & DEBRIS b. Exp 08/31/2017 EC WASTE Profile # CF6400		TRIAXLE DUMP			<50 PPM PCBS
b.					1373 Tons
c.					
d.		Type			

J. Additional Descriptions for Materials Listed Above	K. Disposal Location			
	Cell		Level	
	Grid			

15. Special Handling Instructions and Additional Information

Purchase Order # 42640484 EMERGENCY CONTACT / PHONE NO.: 256 419 1082

16. GENERATOR'S CERTIFICATE:

I hereby certify that the above-described materials are not hazardous wastes as defined by 40 CFR Part 261 or any applicable state law, have been fully and accurately described, classified and packaged and are in proper condition for transportation according to applicable regulations.

Printed Name	Signature "On behalf of"	Month	Day	Year
~~Jerry Hopper~~ Don Williams	D. Williams	10	22	15

TRANSPORTER

17. Transporter 1 Acknowledgement of Receipt of Materials

Printed Name	Signature	Month	Day	Year
Tony Bryant	Tony Bryant	10	22	15

18. Transporter 2 Acknowledgement of Receipt of Materials

Printed Name	Signature	Month	Day	Year

FACILITY

19. Certificate of Final Treatment/Disposal

I certify, on behalf of the above listed treatment facility, that to the best of my knowledge, the above-described waste was managed in compliance with all applicable laws, regulations, permits and licenses on the dates listed above.

20. Facility Owner or Operator: Certification of receipt of non-hazardous materials covered by this manifest.

Printed Name	Signature	Month	Day	Year
Jaynean Gallman OR Naomi Caussey	Naomi Caussey	10	22	15

White- TREATMENT, STORAGE, DISPOSAL FACILITY COPY Blue- GENERATOR #2 COPY Yellow- GENERATOR #1 COPY

Pink- FACILITY USE ONLY Gold- TRANSPORTER #1 COPY

EC Waste- NON-HAZARDOUS MANIFEST

NON-HAZARDOUS MANIFEST	1. Generator's US EPA ID No. ALD004019048	Manifest Doc No.	2. Page 1 of 1

3. Generator's Mailing Address:	Generator's Site Address (If different than mailing):	A. Manifest Number
SOLUTIA INC (ANNISTON PCB SITE) 702 CLYDESDALE AVE ANNISTON, AL 36201	ANNISTON PCB SITE ANNISTON, AL	34
4. Generator's Phone 256-231-8483		B. State Generator's ID

5. Transporter 1 Company Name	6. US EPA ID Number	
EARTH ~~SERVICES~~ Taylor Corp.		C. State Transporter's ID 894245-DOT
		D. Transporter's Phone 256-770-7290
7. Transporter 2 Company Name	8. US EPA ID Number	
		E. State Transporter's ID
		F. Transporter's Phone
9. Designated Facility Name and Site Address THREE CORNERS REGIONAL LANDFILL 2205 COUNTY ROAD 6 PIEDMONT, AL 36272	10. US EPA ID Number	
		G. State Facility ID
		H. State Facility Phone 256-447-1881

GENERATOR

11. Description of Waste Materials	12. Containers No.	Type	13. Total Quantity	14. Unit Wt./Vol.	I. Misc. Comments
A. NON-HAZARDOUS IMPACT SOIL & DEBRIS b. Exp 08/31/2017 EC WASTE Profile # CF6400		TRIAXLE DUMP			<50 PPM PCBS
b.					
c.					
d.		Type			

J. Additional Descriptions for Materials Listed Above	K. Disposal Location			
	Cell		Level	
	Grid			

15. Special Handling Instructions and Additional Information

Purchase Order # 42640484 EMERGENCY CONTACT / PHONE NO.: 256 419 1082

16. GENERATOR'S CERTIFICATE:

I hereby certify that the above-described materials are not hazardous wastes as defined by 40 CFR Part 261 or any applicable state law, have been fully and accurately described, classified and packaged and are in proper condition for transportation according to applicable regulations.

Printed Name	Signature "On behalf of"	Month	Day	Year
Jerry Hopper - Don Williams	T.W. [signature]	10	22	15

TRANSPORTER

17. Transporter 1 Acknowledgement of Receipt of Materials

Printed Name	Signature	Month	Day	Year
Tony Bryant	Tony Bryant	10	22	15

18. Transporter 2 Acknowledgement of Receipt of Materials

Printed Name	Signature	Month	Day	Year

FACILITY

19. Certificate of Final Treatment/Disposal

I certify, on behalf of the above listed treatment facility, that to the best of my knowledge, the above-described waste was managed in compliance with all applicable laws, regulations, permits and licenses on the dates listed above.

20. Facility Owner or Operator: Certification of receipt of non-hazardous materials covered by this manifest.

Printed Name	Signature	Month	Day	Year
Jaynean Gallman OR Naomi Caussey				

White- TREATMENT, STORAGE, DISPOSAL FACILITY COPY Blue- GENERATOR #2 COPY Yellow- GENERATOR #1 COPY

Pink- FACILITY USE ONLY Gold- TRANSPORTER #1 COPY

Three Corners Landfill

ID: 1010 Version: 06

Original Ticket # 508848.8847

Customer Name	WM OF EMELLE	Carrier	WM OF EMELLE
Ticket Date	10/22/2015	Vehicle #	3
Payment Type	Accounts	Container	Disposal
Manual Ticket #		Driver	
Route		Check/CC #	
Hauling Ticket#		Gen EPA ID	
Manifest	MANIFEST #35	Billing #	105886
Destination	2205 COUNTY ROAD 6	Grid	
Purchase Order #	EASTMAN	Volume	
Profile	_SPW SPECIAL WASTE		
Generator	WM OF EMELLE		

	Time	Scale	Operator	Inbound		
In	10/22/2015 09:49		manager		Gross	64,840.00 lb
Out	10/22/2015 10:11		manager		Tare	29,440.00 lb
					Net	35,400.00 lb
					Qty.	17.70 t

Comments:PR#CF6400 NON HAZ IMPACT SOIL AND DEBRIS
HAULED BY TAYLOR CORP

Product	LD%	Qty	UOM	Original
SPECIAL WASTE	100	17.70	t	
ALABAMA DEPARTMENT OF ENV	100	17.70	t	

Driver's Signature

EC Waste- NON-HAZARDOUS MANIFEST

NON-HAZARDOUS MANIFEST	1. Generator's US EPA ID No. ALD004019048	Manifest Doc No.	2. Page 1 of 1	

3. Generator's Mailing Address:
SOLUTIA INC (ANNISTON PCB SITE)
702 CLYDESDALE AVE
ANNISTON, AL 36201
4. Generator's Phone 256-231-8483

Generator's Site Address (if different than mailing):
ANNISTON PCB SITE
ANNISTON, AL

A. Manifest Number 35

B. State Generator's ID

5. Transporter 1 Company Name
EARTH SERVICES ~~Taylor Corp.~~

6. US EPA ID Number

C. State Transporter's ID 894245-DOT

D. Transporter's Phone 256-770-7290

7. Transporter 2 Company Name

8. US EPA ID Number

E. State Transporter's ID

F. Transporter's Phone

9. Designated Facility Name and Site Address
THREE CORNERS REGIONAL LANDFILL
2205 COUNTY ROAD 6
PIEDMONT, AL 36272

10. US EPA ID Number

G. State Facility ID

H. State Facility Phone 256-447-1881

GENERATOR

11. Description of Waste Materials	12. Containers No.	12. Containers Type	13. Total Quantity	14. Unit Wt./Vol.	I. Misc. Comments
A. NON-HAZARDOUS IMPACT SOIL & DEBRIS b. Exp 08/31/2015 EC WASTE Profile # CF6400		TRIAXLE DUMP			<50 PPM PCBS
b.					1776 TONS
c.					
d.		Type			

J. Additional Descriptions for Materials Listed Above

K. Disposal Location

Cell | Level
Grid

15. Special Handling Instructions and Additional Information

Purchase Order # 4264048 EMERGENCY CONTACT / PHONE NO.: 256 419 1082

16. GENERATOR'S CERTIFICATE:
I hereby certify that the above-described materials are not hazardous wastes as defined by 40 CFR Part 261 or any applicable state law, have been fully and accurately described, classified and packaged and are in proper condition for transportation according to applicable regulations.

Printed Name	Signature "On behalf of"	Month	Day	Year
~~Jerry Hopper~~ Don Williams	DW	10	22	15

TRANSPORTER

17. Transporter 1 Acknowledgement of Receipt of Materials

Printed Name	Signature	Month	Day	Year
Kelly Miller	Kelly Miller	10	22	15

18. Transporter 2 Acknowledgement of Receipt of Materials

Printed Name	Signature	Month	Day	Year

FACILITY

19. Certificate of Final Treatment/Disposal
I certify, on behalf of the above listed treatment facility, that to the best of my knowledge, the above-described waste was managed in compliance with all applicable laws, regulations, permits and licenses on the dates listed above.

20. Facility Owner or Operator: Certification of receipt of non-hazardous materials covered by this manifest.

Printed Name	Signature	Month	Day	Year
Jaynean Gallman OR Naomi Caussey	[signature]	10	22	15

White- TREATMENT, STORAGE, DISPOSAL FACILITY COPY
Blue- GENERATOR #2 COPY
Yellow- GENERATOR #1 COPY
Pink- FACILITY USE ONLY
Gold- TRANSPORTER #1 COPY

EC Waste- NON-HAZARDOUS MANIFEST

NON-HAZARDOUS MANIFEST	1. Generator's US EPA ID No. ALD004019048 Manifest Doc No.	2. Page 1 of 1	

3. Generator's Mailing Address:
SOLUTIA INC (ANNISTON PCB SITE)
702 CLYDESDALE AVE
ANNISTON, AL 36201
4. Generator's Phone 256-231-8483

Generator's Site Address (If different than mailing):
ANNISTON PCB SITE
ANNISTON, AL

A. Manifest Number 35
B. State Generator's ID

5. Transporter 1 Company Name
EARTH SERVICES
Taylor Co.

6. US EPA ID Number

C. State Transporter's ID 894245-DOT
D. Transporter's Phone 256-770-7290

7. Transporter 2 Company Name

8. US EPA ID Number

E. State Transporter's ID
F. Transporter's Phone

9. Designated Facility Name and Site Address
THREE CORNERS REGIONAL LANDFILL
2205 COUNTY ROAD 6
PIEDMONT, AL 36272

10. US EPA ID Number

G. State Facility ID
H. State Facility Phone 256-447-1881

GENERATOR

11. Description of Waste Materials	12. Containers No.	12. Containers Type	13. Total Quantity	14. Unit Wt./Vol.	I. Misc. Comments
a. NON-HAZARDOUS IMPACT SOIL & DEBRIS b. Exp 08/31/2013 EC WASTE Profile # CF6400		TRIAXLE DUMP			<50 PPM PCBS
b.					
c.					
d.		Type			

J. Additional Descriptions for Materials Listed Above

K. Disposal Location

Cell		Level	
Grid			

15. Special Handling Instructions and Additional Information

Purchase Order # 4264048

EMERGENCY CONTACT / PHONE NO.:

16. GENERATOR'S CERTIFICATE:
I hereby certify that the above-described materials are not hazardous wastes as defined by 40 CFR Part 261 or any applicable state law, have been fully and accurately described, classified and packaged and are in proper condition for transportation according to applicable regulations.

Printed Name	Signature "On behalf of"	Month	Day	Year
Jerry Hopper Don Williams		10	22	15

TRANSPORTER

17. Transporter 1 Acknowledgement of Receipt of Materials

Printed Name	Signature	Month	Day	Year

18. Transporter 2 Acknowledgement of Receipt of Materials

Printed Name	Signature	Month	Day	Year

FACILITY

19. Certificate of Final Treatment/Disposal
I certify, on behalf of the above listed treatment facility, that to the best of my knowledge, the above-described waste was managed in compliance with all applicable laws, regulations, permits and licenses on the dates listed above.

20. Facility Owner or Operator: Certification of receipt of non-hazardous materials covered by this manifest.

Printed Name	Signature	Month	Day	Year
Jaynean Gallman OR Naomi Caussey				

White- TREATMENT, STORAGE, DISPOSAL FACILITY COPY
Blue- GENERATOR #2 COPY
Yellow- GENERATOR #1 COPY
Pink- FACILITY USE ONLY
Gold- TRANSPORTER #1 COPY

Three Corners Landfill

ID: 1010 Version: 06

Original Ticket # 508860.8859

Customer Name	WM OF EMELLE	Carrier	WM OF EMELLE
Ticket Date	10/22/2015	Vehicle #	2
Payment Type	Accounts	Container	Disposal
Manual Ticket #		Driver	
Route		Check/CC #	
Hauling Ticket#		Gen EPA ID	
Manifest	MANIFEST#36	Billing #	105886
Destination	2205 COUNTY ROAD 6	Grid	
Purchase Order #	EASTMAN	Volume	
Profile	_SPW SPECIAL WASTE		
Generator	WM OF EMELLE		

	Time	Scale	Operator	Inbound		
In	10/22/2015 12:26		manager		Gross	61,840.00 lb
Out	10/22/2015 12:26	NONE	manager		Tare	29,360.00 lb
					Net	32,480.00 lb
					Qty.	16.24 t

Comments: PR#CF6400 NON-HAZ IMPACT SOIL AND DEBRIS
CALHOUN COUNTY
HAULED BY TAYLOR CORP

Product	LD%	Qty	UOM	Original
SPECIAL WASTE	100	16.24	t	
ALABAMA DEPARTMENT OF ENV	100	16.24	t	
REGULATORY COST RECOVERY	100	1.00	t	
ENVIRONMENTAL FEE	100	1.00	t	

Driver's Signature

EC Waste- NON-HAZARDOUS MANIFEST

NON-HAZARDOUS MANIFEST	1. Generator's US EPA ID No. ALD004019048 Manifest Doc No.	2. Page 1 of 1	

3. Generator's Mailing Address:	Generator's Site Address (If different than mailing):	A. Manifest Number 36
SOLUTIA INC (ANNISTON PCB SITE) 702 CLYDESDALE AVE ANNISTON, AL 36201 4. Generator's Phone 256-231-8483	ANNISTON PCB SITE ANNISTON, AL	B. State Generator's ID

5. Transporter 1 Company Name	6. US EPA ID Number	C. State Transporter's ID 894245-DOT D. Transporter's Phone 256-770-7290
EARTH SERVICES Taylor Crop		
7. Transporter 2 Company Name	8. US EPA ID Number	E. State Transporter's ID F. Transporter's Phone
9. Designated Facility Name and Site Address THREE CORNERS REGIONAL LANDFILL 2205 COUNTY ROAD 6 PIEDMONT, AL 36272	10. US EPA ID Number	G. State Facility ID H. State Facility Phone 256-447-1881

GENERATOR

11. Description of Waste Materials	12. Containers No.	12. Containers Type	13. Total Quantity	14. Unit Wt./Vol.	I. Misc. Comments
A. NON-HAZARDOUS IMPACT SOIL & DEBRIS b. Exp 08/31/2013 EC WASTE Profile # CF6400		TRIAXLE DUMP			<50 PPM PCBS
b.					116 TONS
c.					
d.		Type			

J. Additional Descriptions for Materials Listed Above	K. Disposal Location			
	Cell		Level	
	Grid			

15. Special Handling Instructions and Additional Information

Purchase Order # 4264048 4

EMERGENCY CONTACT / PHONE NO.: 256 419 1082

16. GENERATOR'S CERTIFICATE:

I hereby certify that the above-described materials are not hazardous wastes as defined by 40 CFR Part 261 or any applicable state law, have been fully and accurately described, classified and packaged and are in proper condition for transportation according to applicable regulations.

Printed Name	Signature "On behalf of"	Month	Day	Year
Jerry Hopper Don Williams	D Williams	10	22	15

TRANSPORTER

17. Transporter 1 Acknowledgement of Receipt of Materials

Printed Name	Signature	Month	Day	Year
Tony Bryant	Tony Bryant	10	22	15

18. Transporter 2 Acknowledgement of Receipt of Materials

Printed Name	Signature	Month	Day	Year

FACILITY

19. Certificate of Final Treatment/Disposal

I certify, on behalf of the above listed treatment facility, that to the best of my knowledge, the above-described waste was managed in compliance with all applicable laws, regulations, permits and licenses on the dates listed above.

20. Facility Owner or Operator: Certification of receipt of non-hazardous materials covered by this manifest.

Printed Name	Signature	Month	Day	Year
Jaynean Gallman OR Naomi Caussey	Naomi Caussey	10	22	15

White- TREATMENT, STORAGE, DISPOSAL FACILITY COPY Blue- GENERATOR #2 COPY Yellow- GENERATOR #1 COPY

Pink- FACILITY USE ONLY Gold- TRANSPORTER #1 COPY

EC Waste- NON-HAZARDOUS MANIFEST

NON-HAZARDOUS MANIFEST	1. Generator's US EPA ID No. ALD004019048 Manifest Doc No.	2. Page 1 of 1	

GENERATOR

3. Generator's Mailing Address:	Generator's Site Address (If different than mailing):	A. Manifest Number
SOLUTIA INC (ANNISTON PCB SITE) 702 CLYDESDALE AVE ANNISTON, AL 36201	ANNISTON PCB SITE ANNISTON, AL	36
4. Generator's Phone 256-231-8483		B. State Generator's ID

5. Transporter 1 Company Name	6. US EPA ID Number	C. State Transporter's ID 894245-DOT
EARTH SERVICES Taylor Loop		D. Transporter's Phone 256-770-7290
7. Transporter 2 Company Name	8. US EPA ID Number	E. State Transporter's ID
		F. Transporter's Phone
9. Designated Facility Name and Site Address	10. US EPA ID Number	G. State Facility ID
THREE CORNERS REGIONAL LANDFILL 2205 COUNTY ROAD 6 PIEDMONT, AL 36272		H. State Facility Phone 256-447-1881

11. Description of Waste Materials	12. Containers No.	12. Containers Type	13. Total Quantity	14. Unit Wt./Vol.	I. Misc. Comments
A. NON-HAZARDOUS IMPACT SOIL & DEBRIS b. Exp 08/31/2015 EC WASTE Profile # CF6400		TRIAXLE DUMP			<50 PPM PCBS
b.					
c.					
d.		Type			

J. Additional Descriptions for Materials Listed Above	K. Disposal Location			
	Cell		Level	
	Grid			

15. Special Handling Instructions and Additional Information

Purchase Order # 42640484 EMERGENCY CONTACT / PHONE NO.: 706 419 1052

16. GENERATOR'S CERTIFICATE:

I hereby certify that the above-described materials are not hazardous wastes as defined by 40 CFR Part 261 or any applicable state law, have been fully and accurately described, classified and packaged and are in proper condition for transportation according to applicable regulations.

Printed Name	Signature "On behalf of"	Month	Day	Year
Jerry Hopper — Don Williams		10	22	15

TRANSPORTER

17. Transporter 1 Acknowledgement of Receipt of Materials

Printed Name	Signature	Month	Day	Year
Tom Ervin	Tom Ervin	10	22	15

18. Transporter 2 Acknowledgement of Receipt of Materials

Printed Name	Signature	Month	Day	Year

FACILITY

19. Certificate of Final Treatment/Disposal

I certify, on behalf of the above listed treatment facility, that to the best of my knowledge, the above-described waste was managed in compliance with all applicable laws, regulations, permits and licenses on the dates listed above.

20. Facility Owner or Operator: Certification of receipt of non-hazardous materials covered by this manifest.

Printed Name	Signature	Month	Day	Year
Jaynean Gallman OR Naomi Caussey				

White- TREATMENT, STORAGE, DISPOSAL FACILITY COPY Blue- GENERATOR #2 COPY Yellow- GENERATOR #1 COPY

Pink- FACILITY USE ONLY Gold- TRANSPORTER #1 COPY

EC Waste- NON-HAZARDOUS MANIFEST

NON-HAZARDOUS MANIFEST	1. Generator's US EPA ID No. ALD004019048	Manifest Doc No.	2. Page 1 of 1

3. Generator's Mailing Address:	Generator's Site Address (If different than mailing):	A. Manifest Number
SOLUTIA INC (ANNISTON PCB SITE) 702 CLYDESDALE AVE ANNISTON, AL 36201	ANNISTON PCB SITE ANNISTON, AL	37
4. Generator's Phone 256-231-8483		B. State Generator's ID

5. Transporter 1 Company Name	6. US EPA ID Number	
EARTH SERVICES Taylor Corp		C. State Transporter's ID 894245-DOT
		D. Transporter's Phone 256-770-7290
7. Transporter 2 Company Name	8. US EPA ID Number	
		E. State Transporter's ID
		F. Transporter's Phone
9. Designated Facility Name and Site Address THREE CORNERS REGIONAL LANDFILL 2205 COUNTY ROAD 6 PIEDMONT, AL 36272	10. US EPA ID Number	G. State Facility ID
		H. State Facility Phone 256-447-1881

GENERATOR

11. Description of Waste Materials	12. Containers No.	12. Containers Type	13. Total Quantity	14. Unit Wt./Vol.	I. Misc. Comments
A. NON-HAZARDOUS IMPACT SOIL & DEBRIS b. Exp 08/31/2017 EC WASTE Profile # CF6400		TRIAXLE DUMP			<50 PPM PCBS
b.					
c.					
d.		Type			

J. Additional Descriptions for Materials Listed Above	K. Disposal Location			
	Cell		Level	
	Grid			

15. Special Handling Instructions and Additional Information

Purchase Order # 42640484 EMERGENCY CONTACT / PHONE NO.: 256 419 1052

16. GENERATOR'S CERTIFICATE:

I hereby certify that the above-described materials are not hazardous wastes as defined by 40 CFR Part 261 or any applicable state law, have been fully and accurately described, classified and packaged and are in proper condition for transportation according to applicable regulations.

Printed Name	Signature "On behalf of"	Month	Day	Year
Jerry Hopper Don Williams	[signature]	10	23	15

TRANSPORTER

17. Transporter 1 Acknowledgement of Receipt of Materials

Printed Name	Signature	Month	Day	Year
[illegible]		[illegible]	[illegible]	[illegible]

18. Transporter 2 Acknowledgement of Receipt of Materials

Printed Name	Signature	Month	Day	Year

FACILITY

19. Certificate of Final Treatment/Disposal

I certify, on behalf of the above listed treatment facility, that to the best of my knowledge, the above-described waste was managed in compliance with all applicable laws, regulations, permits and licenses on the dates listed above.

20. Facility Owner or Operator: Certification of receipt of non-hazardous materials covered by this manifest.

Printed Name	Signature	Month	Day	Year
Jaynean Gallman OR Naomi Caussey				

White- TREATMENT, STORAGE, DISPOSAL FACILITY COPY Blue- GENERATOR #2 COPY Yellow- GENERATOR #1 COPY

Pink- FACILITY USE ONLY Gold- TRANSPORTER #1 COPY

EC Waste- NON-HAZARDOUS MANIFEST

NON-HAZARDOUS MANIFEST	1. Generator's US EPA ID No. ALD004019048 Manifest Doc No.	2. Page 1 of 1	

3. Generator's Mailing Address:	Generator's Site Address (If different than mailing):	A. Manifest Number 38
SOLUTIA INC (ANNISTON PCB SITE) 702 CLYDESDALE AVE ANNISTON, AL 36201 4. Generator's Phone 256-231-8483	ANNISTON PCB SITE ANNISTON, AL	B. State Generator's ID

5. Transporter 1 Company Name	6. US EPA ID Number	C. State Transporter's ID 894245-DOT
~~EARTH SERVICES~~ Taylor Loop		D. Transporter's Phone 256-770-7290
7. Transporter 2 Company Name	8. US EPA ID Number	E. State Transporter's ID
		F. Transporter's Phone
9. Designated Facility Name and Site Address THREE CORNERS REGIONAL LANDFILL 2205 COUNTY ROAD 6 PIEDMONT, AL 36272	10. US EPA ID Number	G. State Facility ID H. State Facility Phone 256-447-1881

GENERATOR

11. Description of Waste Materials	12. Containers No.	12. Containers Type	13. Total Quantity	14. Unit Wt./Vol.	I. Misc. Comments
A. NON-HAZARDOUS IMPACT SOIL & DEBRIS b. Exp 08/31/2017 EC WASTE Profile # CF6400		TRIAXLE DUMP			<50 PPM PCBS
b.					
c.					
d.		Type			

J. Additional Descriptions for Materials Listed Above	K. Disposal Location			
	Cell		Level	
	Grid			

15. Special Handling Instructions and Additional Information

Purchase Order # 4216040484 EMERGENCY CONTACT / PHONE NO.: 419 10x3

16. GENERATOR'S CERTIFICATE:

I hereby certify that the above-described materials are not hazardous wastes as defined by 40 CFR Part 261 or any applicable state law, have been fully and accurately described, classified and packaged and are in proper condition for transportation according to applicable regulations.

Printed Name	Signature "On behalf of"	Month	Day	Year
Jerry Hopper ~ DON Williams	DW Williams	10	23	15

TRANSPORTER

17. Transporter 1 Acknowledgement of Receipt of Materials

Printed Name	Signature	Month	Day	Year
Allen Wesley	Allen Wesley	10	23	15

18. Transporter 2 Acknowledgement of Receipt of Materials

Printed Name	Signature	Month	Day	Year

FACILITY

19. Certificate of Final Treatment/Disposal

I certify, on behalf of the above listed treatment facility, that to the best of my knowledge, the above-described waste was managed in compliance with all applicable laws, regulations, permits and licenses on the dates listed above.

20. Facility Owner or Operator: Certification of receipt of non-hazardous materials covered by this manifest.

Printed Name	Signature	Month	Day	Year
Jaynean Gallman OR Naomi Caussey				

White- TREATMENT, STORAGE, DISPOSAL FACILITY COPY Blue- GENERATOR #2 COPY Yellow- GENERATOR #1 COPY

Pink- FACILITY USE ONLY Gold- TRANSPORTER #1 COPY

EC Waste- NON-HAZARDOUS MANIFEST

NON-HAZARDOUS MANIFEST	1. Generator's US EPA ID No. ALD004019048	Manifest Doc No.	2. Page 1 of 1

3. Generator's Mailing Address:	Generator's Site Address (If different than mailing):	A. Manifest Number
SOLUTIA INC (ANNISTON PCB SITE) 702 CLYDESDALE AVE ANNISTON, AL 36201	ANNISTON PCB SITE ANNISTON, AL	39
4. Generator's Phone 256-231-8483		B. State Generator's ID

5. Transporter 1 Company Name	6. US EPA ID Number	
EARTH SERVICES Taylor Corp.		C. State Transporter's ID 894245-DOT
		D. Transporter's Phone 256-770-7290
7. Transporter 2 Company Name	8. US EPA ID Number	
		E. State Transporter's ID
		F. Transporter's Phone
9. Designated Facility Name and Site Address THREE CORNERS REGIONAL LANDFILL 2205 COUNTY ROAD 6 PIEDMONT, AL 36272	10. US EPA ID Number	
		G. State Facility ID
		H. State Facility Phone 256-447-1881

GENERATOR

11. Description of Waste Materials	12. Containers No.	12. Containers Type	13. Total Quantity	14. Unit Wt./Vol.	I. Misc. Comments
A. NON-HAZARDOUS IMPACT SOIL & DEBRIS b. Exp 08/31/2017 EC WASTE Profile # CF6400		TRIAXLE DUMP			<50 PPM PCBS
b.					
c.					
d.		Type			

J. Additional Descriptions for Materials Listed Above	K. Disposal Location			
	Cell		Level	
	Grid			

15. Special Handling Instructions and Additional Information

Purchase Order # 421-40484 EMERGENCY CONTACT / PHONE NO.:

16. GENERATOR'S CERTIFICATE:

I hereby certify that the above-described materials are not hazardous wastes as defined by 40 CFR Part 261 or any applicable state law, have been fully and accurately described, classified and packaged and are in proper condition for transportation according to applicable regulations.

Printed Name	Signature "On behalf of"	Month	Day	Year
Jerry Hopper Don Williams	[signature]			

TRANSPORTER

17. Transporter 1 Acknowledgement of Receipt of Materials

Printed Name	Signature	Month	Day	Year

18. Transporter 2 Acknowledgement of Receipt of Materials

Printed Name	Signature	Month	Day	Year

FACILITY

19. Certificate of Final Treatment/Disposal

I certify, on behalf of the above listed treatment facility, that to the best of my knowledge, the above-described waste was managed in compliance with all applicable laws, regulations, permits and licenses on the dates listed above.

20. Facility Owner or Operator: Certification of receipt of non-hazardous materials covered by this manifest.

Printed Name	Signature	Month	Day	Year
Jaynean Gallman OR Naomi Caussey				

White- TREATMENT, STORAGE, DISPOSAL FACILITY COPY Blue- GENERATOR #2 COPY Yellow- GENERATOR #1 COPY

Pink- FACILITY USE ONLY Gold- TRANSPORTER #1 COPY

EC Waste- NON-HAZARDOUS MANIFEST

NON-HAZARDOUS MANIFEST	1. Generator's US EPA ID No. ALD004019048 Manifest Doc No.	2. Page 1 of 1	

GENERATOR

3. Generator's Mailing Address:	Generator's Site Address (If different than mailing):	A. Manifest Number 39
SOLUTIA INC (ANNISTON PCB SITE) 702 CLYDESDALE AVE ANNISTON, AL 36201	ANNISTON PCB SITE ANNISTON, AL	B. State Generator's ID
4. Generator's Phone 256-231-8483		

5. Transporter 1 Company Name	6. US EPA ID Number	C. State Transporter's ID 894245-DOT
EARTH SERVICES Taylor Corp.		D. Transporter's Phone 256-770-7290
7. Transporter 2 Company Name	8. US EPA ID Number	E. State Transporter's ID
		F. Transporter's Phone
9. Designated Facility Name and Site Address THREE CORNERS REGIONAL LANDFILL 2205 COUNTY ROAD 6 PIEDMONT, AL 36272	10. US EPA ID Number	G. State Facility ID H. State Facility Phone 256-447-1881

11. Description of Waste Materials	12. Containers No.	12. Containers Type	13. Total Quantity	14. Unit Wt./Vol.	I. Misc. Comments
a. NON-HAZARDOUS IMPACT SOIL & DEBRIS b. Exp 08/31/2017 EC WASTE Profile # CF6400		TRIAXLE DUMP			<50 PPM PCBS
b.					
c.					
d.		Type			

J. Additional Descriptions for Materials Listed Above	K. Disposal Location			
	Cell		Level	
	Grid			

15. Special Handling Instructions and Additional Information

Purchase Order # 4216104184 EMERGENCY CONTACT / PHONE NO.: 256-447-1881

16. GENERATOR'S CERTIFICATE:

I hereby certify that the above-described materials are not hazardous wastes as defined by 40 CFR Part 261 or any applicable state law, have been fully and accurately described, classified and packaged and are in proper condition for transportation according to applicable regulations.

Printed Name	Signature "On behalf of"	Month	Day	Year
Jerry Hopper DonWilliams		10	23	15

TRANSPORTER

17. Transporter 1 Acknowledgement of Receipt of Materials				
Printed Name	Signature	Month	Day	Year

18. Transporter 2 Acknowledgement of Receipt of Materials				
Printed Name	Signature	Month	Day	Year

FACILITY

19. Certificate of Final Treatment/Disposal

I certify, on behalf of the above listed treatment facility, that to the best of my knowledge, the above-described waste was managed in compliance with all applicable laws, regulations, permits and licenses on the dates listed above.

20. Facility Owner or Operator: Certification of receipt of non-hazardous materials covered by this manifest.

Printed Name	Signature	Month	Day	Year
Jaynean Gallman OR Naomi Caussey				

White- TREATMENT, STORAGE, DISPOSAL FACILITY COPY Blue- GENERATOR #2 COPY Yellow- GENERATOR #1 COPY

Pink- FACILITY USE ONLY Gold- TRANSPORTER #1 COPY

Three Corners Landfill

ID: 1010 Version: 06

Original Ticket # 510993.10979

Customer Name	WM OF EMELLE	Carrier	WM OF EMELLE
Ticket Date	1/11/2016	Vehicle #	MACK-20OT
Payment Type	Accounts	Container	Disposal
Manual Ticket #		Driver	
Route		Check/CC #	
Hauling Ticket#		Gen EPA ID	
Manifest	18	Billing #	105886
Destination	2205 COUNTY ROAD 6	Grid	
Purchase Order #	EASTMAN	Volume	
Profile	_SPW SPECIAL WASTE		
Generator	WM OF EMELLE		

	Time	Scale	Operator	Inbound		
In	1/11/2016 13:37	NONE	Ncaussey		Gross	56,420.00 lb
Out	1/11/2016 13:37	NONE	Ncaussey		Tare	30,880.00 lb
					Net	25,540.00 lb
					Qty.	12.77 t

Comments:HAULED BY IWI PR#CF6400

Product	LD%	Qty	UOM	Original
SPECIAL WASTE	100	12.77	t	
ALABAMA DEPARTMENT OF ENV	100	12.77	t	
ENVIRONMENTAL FEE	100	1.00	t	
REGULATORY COST RECOVERY	100	1.00	t	

Driver's Signature

EC Waste- NON-HAZARDOUS MANIFEST

NON-HAZARDOUS MANIFEST	1. Generator's US EPA ID No. ALD004019048 Manifest Doc No.	2. Page 1 of 1	

3. Generator's Mailing Address:
SOLUTIA INC (ANNISTON PCB SITE)
702 CLYDESDALE AVE
ANNISTON, AL 36201
4. Generator's Phone 256-231-8483

Generator's Site Address (If different than mailing):
ANNISTON PCB SITE
ANNISTON, AL

A. Manifest Number **18**
B. State Generator's ID

5. Transporter 1 Company Name
EARTH SERVICES J.T Taylor Corporation / IVI

6. US EPA ID Number

C. State Transporter's ID 894245-DOT
D. Transporter's Phone 256-770-7290

7. Transporter 2 Company Name

8. US EPA ID Number

E. State Transporter's ID
F. Transporter's Phone

9. Designated Facility Name and Site Address
THREE CORNERS REGIONAL LANDFILL
2205 COUNTY ROAD 6
PIEDMONT, AL 36272

10. US EPA ID Number

G. State Facility ID
H. State Facility Phone 256-447-1881

GENERATOR

11. Description of Waste Materials	12. Containers No.	12. Containers Type	13. Total Quantity	14. Unit Wt./Vol.	I. Misc. Comments
A. NON-HAZARDOUS IMPACT SOIL & DEBRIS b. Exp 08/31/2015 **EC WASTE Profile #** CF6400		TRIAXLE DUMP			<50 PPM PCBS
b.					12.77 TONS
c.					
d.		Type			

J. Additional Descriptions for Materials Listed Above

K. Disposal Location
Cell | Level
Grid

15. Special Handling Instructions and Additional Information

Purchase Order # 426640484 EMERGENCY CONTACT / PHONE NO.: 601-807-1187

16. GENERATOR'S CERTIFICATE:
I hereby certify that the above-described materials are not hazardous wastes as defined by 40 CFR Part 261 or any applicable state law, have been fully and accurately described, classified and packaged and are in proper condition for transportation according to applicable regulations.

Printed Name	Signature "On behalf of"	Month	Day	Year
~~Jerry Hopper~~ Don Williams		01	11	16

TRANSPORTER

17. Transporter 1 Acknowledgement of Receipt of Materials

Printed Name	Signature	Month	Day	Year
Tony Jordan				

18. Transporter 2 Acknowledgement of Receipt of Materials

Printed Name	Signature	Month	Day	Year

FACILITY

19. Certificate of Final Treatment/Disposal
I certify, on behalf of the above listed treatment facility, that to the best of my knowledge, the above-described waste was managed in compliance with all applicable laws, regulations, permits and licenses on the dates listed above.

20. Facility Owner or Operator: Certification of receipt of non-hazardous materials covered by this manifest.

Printed Name	Signature	Month	Day	Year
Jaynean Gallman OR Naomi Caussey		1	11	16

White- TREATMENT, STORAGE, DISPOSAL FACILITY COPY
Blue- GENERATOR #2 COPY
Yellow- GENERATOR #1 COPY
Pink- FACILITY USE ONLY
Gold- TRANSPORTER #1 COPY

APPENDIX E

SUBGRADE FIELD DENSITY TESTS AND CERTIFICATES OF SUBGRADE ACCEPTANCE

APPENDIX E1

Area A

G:\$Archive H\9433680 - Solutia\OU-3 RA Construction\AsBuilt\Subgrade Density Testing\Production\1302962CQAE1 Area A Subgrade Density Testing.dwg | Layout: 01 Density Test | Modified: SPiechota 07/14/2017 8:16 AM | Plotted: SPiechota 07/14/2017

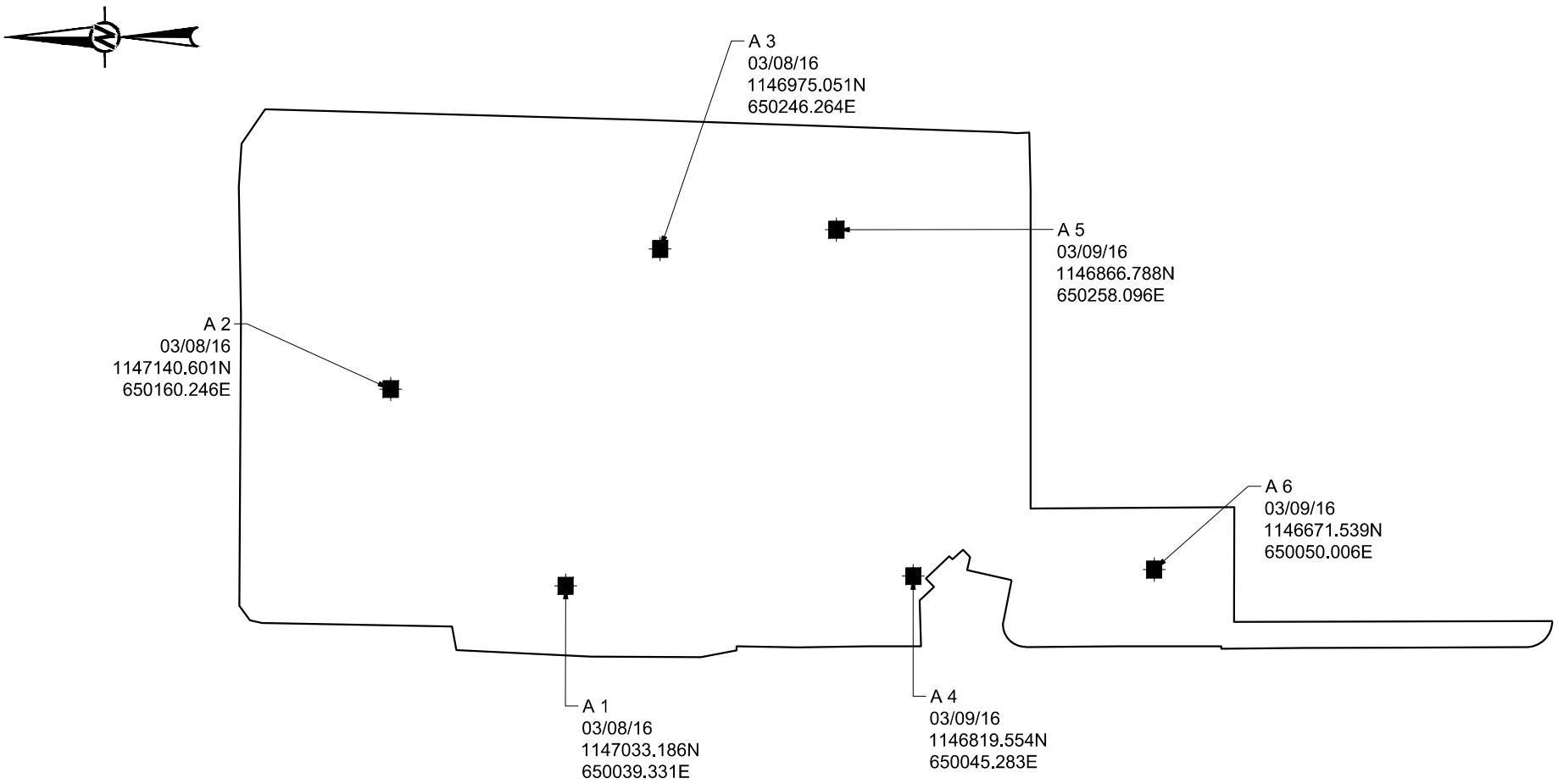

LEGEND

SUBGRADE DENSITY TEST LOCATION

0 50 100 150

SCALE FEET

REV	DATE	REVISION DESCRIPTION	DES	CADD	CHK	RVW
△	-	-	-	-	-	-

PROJECT

PHARMACIA LLC / SOLUTIA INC.
OU-3 PCB SITE, ANNISTON, ALABAMA

TITLE

AREA A
SUBGRADE DENSITY TESTING

Golder Associates

PROJECT No.		1302962CQA	FILE No.	1302962CQAE1 Area A Subgrade Density Testing
DESIGN	-	-	SCALE	AS SHOWN
CADD	SEP	07/14/17	FIGURE	
CHECK	ARF	07/14/17		E1
REVIEW	SJM	12/22/17		

FIELD MOISTURE / DENSITY TEST RECORD

NUCLEAR GAUGE METHOD

ASTM D 3017 / 2922

PROJECT NUMBER: 1302962CQA
PROJECT TITLE: OU3 RA Construction/Solutia
OWNER: Solutia
CONTRACTOR: Taylor
LOCATION: Anniston, AL
DATE TESTED: 3/8/2016

TEST NUMBER	1	2	3				
TEST LOCATION N / E	Area A see map	Area A see map	Area A see map				
ELEVATION	subgrade	subgrade	subgrade				
DEPTH	4	4	4				
THICKNESS OF LIFT	6	6	6				
DENSITY COUNT	2057	2110	1971				
MOISTURE COUNT	196	210	204				
WET DENSITY, pcf	128.6	127.3	130.7				
MOISTURE %	15	16.6	15.5				
DRY DENSITY, pcf	111.8	109.2	113,2				
MATERIAL DESCRIPTION	CMT 04	CMT 04	CMT 04				
MAX DRY DENSITY, pcf	110.8	110.8	110.8				
OPTIMUM MOISTURE, %	16.9	16.9	16.9				
% COMPACTION	100.9	98.5	102.2				
DIFF FROM O.M.C.	1.9	0.3	1.4				
PASS/FAIL (DENSITY)	P	P	P				
PASS/FAIL (MOISTURE)	P	P	P				

SPECIFICATIONS:

95 % STANDARD / MODIFIED

3 % OF O.M.C.

DAILY STANDARD COUNTS:

MOISTURE 618

DENSITY 2151

TESTED BY: _____ **CHECKED BY:** _____ **DATE:** _____

GOLDER FORM S17-0699

(JANUARY 2005)

GOLDER ASSOCIATES INC.

FIELD MOISTURE / DENSITY TEST RECORD

NUCLEAR GAUGE METHOD

ASTM D 3017 / 2922

PROJECT NUMBER: 1302962CQA
PROJECT TITLE: OU3 RA Construction/Solutia
OWNER: Solutia
CONTRACTOR: Taylor
LOCATION: Anniston, AL
DATE TESTED: 3/9/2016

TEST NUMBER	4	5					
TEST LOCATION N	Area A	Area A					
TEST LOCATION E	see map	see map					
ELEVATION	subgrade	subgrade					
DEPTH	4	4					
THICKNESS OF LIFT	6	6					
DENSITY COUNT	2301	2336					
MOISTURE COUNT	178	186					
WET DENSITY, pcf	123.8	123					
MOISTURE %	15.1	14.8					
DRY DENSITY, pcf	108.7	107.2					
MATERIAL DESCRIPTION	CMT 04	CMT 04					
MAX DRY DENSITY, pcf	110.8	110.8					
OPTIMUM MOISTURE, %	16.9	16.9					
% COMPACTION	98.1	96.7					
DIFF FROM O.M.C.	1.8	2.1					
PASS/FAIL (DENSITY)	P	P					
PASS/FAIL (MOISTURE)	P	P					

SPECIFICATIONS:

95 % STANDARD / MODIFIED

3 % OF O.M.C.

DAILY STANDARD COUNTS:

MOISTURE 616

DENSITY 2186

TESTED BY: _____ **CHECKED BY:** _____ **DATE:** _____

GOLDER FORM S17-0699

(JANUARY 2005)

GOLDER ASSOCIATES INC.

FIELD MOISTURE / DENSITY TEST RECORD

NUCLEAR GAUGE METHOD

ASTM D 3017 / 2922

PROJECT NUMBER: 1302962CQA **PROJECT TITLE:** OU3 RA Construction/Solutia
OWNER: Solutia **CONTRACTOR:** Taylor
LOCATION: Anniston, AL **DATE TESTED:**

TEST NUMBER	6						
TEST LOCATION N / E	Area A see map						
ELEVATION	sub-grade						
DEPTH	4						
THICKNESS OF LIFT	6						
DENSITY COUNT	1989						
MOISTURE COUNT	192						
WET DENSITY, pcf	131.4						
MOISTURE %	14.2						
DRY DENSITY, pcf	115						
MATERIAL DESCRIPTION	CMT04						
MAX DRY DENSITY, pcf	110.8						
OPTIMUM MOISTURE, %	16.9						
% COMPACTION	103.8						
DIFF FROM O.M.C.	2.7						
PASS/FAIL (DENSITY)	P						
PASS/FAIL (MOISTURE)	P						

SPECIFICATIONS:

_____ % STANDARD / MODIFIED

_____ % OF O.M.C.

DAILY STANDARD COUNTS:

MOISTURE _____

DENSITY _____

TESTED BY: _____ **CHECKED BY:** _____ **DATE:** _____

GOLDER FORM S17-0699

(JANUARY 2005)

GOLDER ASSOCIATES INC.

CERTIFICATE OF ACCEPTANCE OF SOIL SURFACE

	GEOSYNTHETIC INSTALLER		PROJECT
COMPANY	Plastic Fusion	LOCATION	Anniston, AL
ADDRESS	3455 Stanwood Blvd NE	PROJECT	OU3 RA Connstruction/Solutia
	Huntsville, AL	OWNER	Solutia
	35811		

I, the Undersigned, the duly authorized representative of

Solutia

do hereby accept the area of soil surface bounded by

Panels A1 – A13

and shall be responsible for maintaining its integrity and suitability in accordance with the project specifications from this date to the completion of the installation.

NAME	SIGNATURE	TITLE	DATE
Shawn Cusey		CQA	3/16/16

CERTIFICATE OF ACCEPTANCE RECEIVED BY ~~QA/QC MANAGER~~ Plastic Fusion

NAME	SIGNATURE	TITLE	DATE
Walter Johnston	Walter Johnston	Super.	3-16-16

CERTIFICATE OF ACCEPTANCE RECEIVED BY OWNER

NAME	SIGNATURE	TITLE	DATE
Josh Threadgill	Josh Threadgill	CQA	3/16/16

GOLDER FORM: G4-0699

(January 2005)

GOLDER ASSOCIATES INC.

CERTIFICATE OF ACCEPTANCE OF SOIL SURFACE

GEOSYNTHETIC INSTALLER		PROJECT	
COMPANY	Plastic Fusion	LOCATION	Anniston, AL
ADDRESS	3455 Stanwood Blvd NE	PROJECT	OU3 RA Connstruction/Solutia
	Huntsville, AL	OWNER	Solutia
	35811		

I, the Undersigned, the duly authorized representative of

Solutia

do hereby accept the area of soil surface bounded by

Part B A14 - 25

and shall be responsible for maintaining its integrity and suitability in accordance with the project specifications from this date to the completion of the installation.

NAME	SIGNATURE	TITLE	DATE
Shaun Cuz		CQA	3/17/16

CERTIFICATE OF ACCEPTANCE RECEIVED BY ~~QA/QC MANAGER~~ Plastic Fusion

NAME	SIGNATURE	TITLE	DATE
Walter Johnston	Walter Johnston	Super.	3-17-16

CERTIFICATE OF ACCEPTANCE RECEIVED BY OWNER

NAME	SIGNATURE	TITLE	DATE
Josh Thredgill		CM	3/17/16

GOLDER FORM: G4-0699

(January 2005)

GOLDER ASSOCIATES INC.

CERTIFICATE OF ACCEPTANCE OF SOIL SURFACE

	GEOSYNTHETIC INSTALLER		PROJECT
COMPANY	Plastic Fusion	LOCATION	Anniston, AL
ADDRESS	3455 Stanwood Blvd NE	PROJECT	OU3 RA Connstruction/Solutia
	Huntsville, AL	OWNER	Solutia
	35811		

I, the Undersigned, the duly authorized representative of Solutia

do hereby accept the area of soil surface bounded by panels A25 – A33

and shall be responsible for maintaining its integrity and suitability in accordance with the project specifications from this date to the completion of the installation.

NAME	SIGNATURE	TITLE	DATE
Shawn Casey		CQA	3/18/16

CERTIFICATE OF ACCEPTANCE RECEIVED BY ~~QA/QC MANAGER~~ Plastic Fusion

NAME	SIGNATURE	TITLE	DATE
Walter B Johnston		Super.	3/18/16

CERTIFICATE OF ACCEPTANCE RECEIVED BY OWNER

NAME	SIGNATURE	TITLE	DATE
Josh Threadgill		CQA	3/18/16

GOLDER FORM: G4-0699

(January 2005)

GOLDER ASSOCIATES INC.

APPENDIX E2

Area E

G:\$Archive H\9433680 - Solutia\OU-3 RA Construction\AsBuilt\Subgrade Density Testing\Production\1302962CQAE2 Area E Subgrade Density Testing.dwg | Layout: 01 Density Test | Modified: SPiechota 07/14/2017 8:39 AM | Plotted: SPiechota 07/14/2017

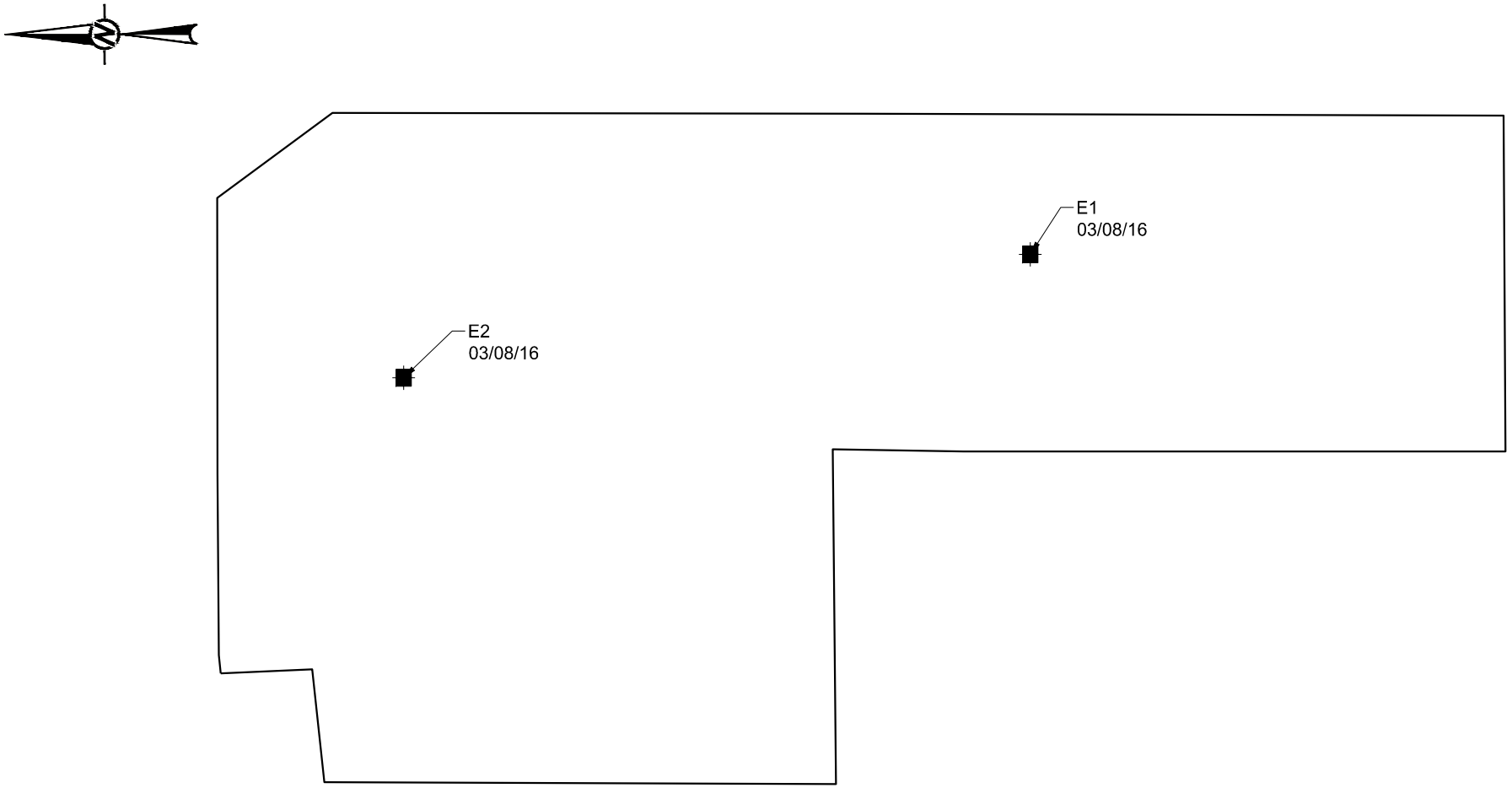

LEGEND

SUBGRADE DENSITY TESTING LOCATION

0 15 30 45
SCALE FEET

REV	DATE	REVISION DESCRIPTION	DES	CADD	CHK	RVW
1	-	-	-	-	-	-

PROJECT

PHARMACIA LLC / SOLUTIA INC.
OU-3 PCB SITE, ANNISTON, ALABAMA

TITLE

AREA E
SUBGRADE DENSITY TESTING

Golder Associates

PROJECT No.		1302962CQA	FILE No.	1302962CQAE2 Area E Subgrade Density Testing
DESIGN	-	-	SCALE	AS SHOWN
CADD	SEP	07/14/17	FIGURE	
CHECK	ARF	07/14/17		E2
REVIEW	SJM	12/22/17		

FIELD MOISTURE / DENSITY TEST RECORD

NUCLEAR GAUGE METHOD

ASTM D 3017 / 2922

PROJECT NUMBER: 1302962CQA
PROJECT TITLE: OU3 RA Construction/Solutia
OWNER: Solutia
CONTRACTOR: Taylor
LOCATION: Anniston, AL
DATE TESTED: 3/8/2016

TEST NUMBER	1	2	3				
TEST LOCATION N / E	Area E see map	Area E see map					
ELEVATION	sub-grade	sub-grade					
DEPTH	4	4					
THICKNESS OF LIFT	6	6					
DENSITY COUNT	2264	2251					
MOISTURE COUNT	194	198					
WET DENSITY, pcf	125.3	125.6					
MOISTURE %	15.3	15.6					
DRY DENSITY, pcf	108.7	108.6					
MATERIAL DESCRIPTION	CMT4	CMT4					
MAX DRY DENSITY, pcf	110.8	110.8					
OPTIMUM MOISTURE, %	16.9	16.9					
% COMPACTION	98.1	98					
DIFF FROM O.M.C.	1.6	1.3					
PASS/FAIL (DENSITY)	P	P					
PASS/FAIL (MOISTURE)	P	P					

SPECIFICATIONS:

95 % STANDARD / MODIFIED

3 % OF O.M.C.

DAILY STANDARD COUNTS:

MOISTURE _____

DENSITY _____

TESTED BY: _____ **CHECKED BY:** _____ **DATE:** _____

GOLDER FORM S17-0699

(JANUARY 2005)

GOLDER ASSOCIATES INC.

CERTIFICATE OF ACCEPTANCE OF SOIL SURFACE

	GEOSYNTHETIC INSTALLER		PROJECT
COMPANY	Plastic Fusion	LOCATION	Anniston, AL
ADDRESS	3455 Stanwood Blvd NE	PROJECT	OU3 RA Connstruction/Solutia
	Huntsville, AL	OWNER	Solutia
	35811		

I, the Undersigned, the duly authorized representative of

Solutia

do hereby accept the area of soil surface bounded by

E1 – E16

and shall be responsible for maintaining its integrity and suitability in accordance with the project specifications from this date to the completion of the installation.

NAME	SIGNATURE	TITLE	DATE
Shawn Cusey		CQA	5/ /16

CERTIFICATE OF ACCEPTANCE RECEIVED BY QA / QC MANAGER

NAME	SIGNATURE	TITLE	DATE
Jimmy Crutch Sr.		SUP	5/5/16

CERTIFICATE OF ACCEPTANCE RECEIVED BY OWNER

NAME	SIGNATURE	TITLE	DATE
Josh Threadgill	Josh Threadgill	Construction Manager	5/6/16

GOLDER FORM: G4-0699

(January 2005)

GOLDER ASSOCIATES INC.

APPENDIX E3

PCB Cells

FIELD MOISTURE / DENSITY TEST RECORD
NUCLEAR GAUGE METHOD
ASTM D 3017 / 2922

PROJECT NUMBER: 1302962.CQA **PROJECT TITLE:** OU-3 RA Cover Systems
OWNER: Solutia, Inc Anniston, AL
LOCATION: PCB Cells Subgrade **DATE TESTED:** 9/22/2015

TEST NUMBER	PCB-01	PCB-02	PCB-03				
TEST LOCATION N / E	See Testing Map						
ELEVATION	Subgrade	Subgrade	Subgrade				
DEPTH	4"	4"	4"				
DENSITY COUNT	2435	2385	2646				
MOISTURE COUNT	114	103	124				
WET DENSITY, pcf	121.5	122.6	117.2				
MOISTURE, pcf / %	8.9 / 7.9	7.8 / 6.8	9.8 / 9.1				
DRY DENSITY, pcf	112.6	114.8	107.4				
MATERIAL DESCRIPTION	CMT-01 CL	CMT-01 CL	CMT-01 CL				
MAX DRY DENSITY, pcf	116.6	116.6	116.6				
OPTIMUM MOISTURE, %	12.3	12.3	12.3				
% COMPACTION	96.6%	98.5%	92.1%				
DIFF FROM O.M.C.	-4.4	-5.5	-3.2				
PASS/FAIL (DENSITY)	PASS	PASS	FAIL				
PASS/FAIL (MOISTURE)	FAIL	FAIL	FAIL				

SPECIFICATIONS:

95 % STANDARD / MODIFIED

+ / - 3 % OF O.M.C.

DAILY STANDARD COUNTS:

MOISTURE --

DENSITY --

TESTED BY: S. Casey / P. Callahan **CHECKED BY:** P. Callahan **DATE:** 10/8/2015

GCS FORM S17
(MAY 1992)

GOLDER ASSOCIATES INC.

FIELD MOISTURE / DENSITY TEST RECORD
NUCLEAR GAUGE METHOD
ASTM D 3017 / 2922

PROJECT NUMBER: 1302962.CQA **PROJECT TITLE:** OU-3 RA Cover Systems
OWNER: Solutia, Inc Anniston, AL
LOCATION: PCB Cells Subgrade **DATE TESTED:** 9/23/2015

TEST NUMBER	PCB-04						
TEST LOCATION N / E	See Testing Map						
ELEVATION	Subgrade						
DEPTH	4"						
DENSITY COUNT	2040						
MOISTURE COUNT	155						
WET DENSITY, pcf	130.2						
MOISTURE, pcf / %	12.9 / 11.0						
DRY DENSITY, pcf	117.3						
MATERIAL DESCRIPTION	CMT-01 CL						
MAX DRY DENSITY, pcf	116.6						
OPTIMUM MOISTURE, %	12.3						
% COMPACTION	100.6%						
DIFF FROM O.M.C.	-1.3						
PASS/FAIL (DENSITY)	PASS						
PASS/FAIL (MOISTURE)	PASS						

SPECIFICATIONS:
95 **% STANDARD / MODIFIED**
+ / - 3 **% OF O.M.C.**

DAILY STANDARD COUNTS:
MOISTURE **616**
DENSITY **2194**

TESTED BY: **S. Casey** **CHECKED BY:** **P. Callahan** **DATE:** **10/8/2015**

GCS FORM S17
(MAY 1992)

GOLDER ASSOCIATES INC.

FIELD MOISTURE / DENSITY TEST RECORD
NUCLEAR GAUGE METHOD
ASTM D 3017 / 2922

PROJECT NUMBER: 1302962.CQA **PROJECT TITLE:** OU-3 RA Cover Systems
OWNER: Solutia, Inc Anniston, AL
LOCATION: PCB Cells Subgrade **DATE TESTED:** 10/1/2015

TEST NUMBER	PCB-05	PCB-06	PCB-07				
TEST LOCATION N / E	See Testing Map						
ELEVATION	Subgrade	Subgrade	Subgrade				
DEPTH	4"	4"	4"				
DENSITY COUNT	2263	2352	2161				
MOISTURE COUNT	163	134	122				
WET DENSITY, pcf	125	123.2	127.6				
MOISTURE, pcf / %	13.8 / 12.4	11.0 / 9.8	9.8 / 8.4				
DRY DENSITY, pcf	111.3	112.2	117.7				
MATERIAL DESCRIPTION	CMT-01 CL	CMT-01 CL	CMT-01 CL				
MAX DRY DENSITY, pcf	116.6	116.6	116.6				
OPTIMUM MOISTURE, %	12.3	12.3	12.3				
% COMPACTION	95.5%	96.2%	100.9%				
DIFF FROM O.M.C.	0.1	-2.5	-3.9				
PASS/FAIL (DENSITY)	PASS	PASS	PASS				
PASS/FAIL (MOISTURE)	PASS	PASS	FAIL				

SPECIFICATIONS:
95 % STANDARD / MODIFIED
+ / - 3 % OF O.M.C.

DAILY STANDARD COUNTS:
MOISTURE **612**
DENSITY **2199**

TESTED BY: S. Casey **CHECKED BY:** P. Callahan **DATE:** 10/8/2015

GCS FORM S17
(MAY 1992)

GOLDER ASSOCIATES INC.

FIELD MOISTURE / DENSITY TEST RECORD
NUCLEAR GAUGE METHOD
ASTM D 3017 / 2922

PROJECT NUMBER: 1302962.CQA **PROJECT TITLE:** OU-3 RA Cover Systems
OWNER: Solutia, Inc Anniston, AL
LOCATION: PCB Cells Subgrade **DATE TESTED:** 10/5/2015

TEST NUMBER	PCB-08						
TEST LOCATION N / E	See Testing Map						
ELEVATION	Subgrade						
DEPTH	4"						
DENSITY COUNT	2368						
MOISTURE COUNT	134						
WET DENSITY, pcf	122.5						
MOISTURE, pcf / %	10.9 / 9.7						
DRY DENSITY, pcf	111.6						
MATERIAL DESCRIPTION	CMT-01						
MAX DRY DENSITY, pcf	116.6						
OPTIMUM MOISTURE, %	12.3						
% COMPACTION	95.7%						
DIFF FROM O.M.C.	-2.6						
PASS/FAIL (DENSITY)	PASS						
PASS/FAIL (MOISTURE)	PASS						

SPECIFICATIONS:
95 **% STANDARD / MODIFIED**
+ / - 3 **% OF O.M.C.**

DAILY STANDARD COUNTS:
MOISTURE **612**
DENSITY **2182**

TESTED BY: **S. Casey** **CHECKED BY:** **P. Callahan** **DATE:** **10/8/2015**

GCS FORM S17
(MAY 1992)

GOLDER ASSOCIATES INC.

FIELD MOISTURE / DENSITY TEST RECORD
NUCLEAR GAUGE METHOD
ASTM D 3017 / 2922

PROJECT NUMBER: 1302962.CQA **PROJECT TITLE:** OU-3 RA Cover Systems
OWNER: Solutia, Inc Anniston, AL
LOCATION: PCB Cells Subgrade **DATE TESTED:** 10/6/2015

TEST NUMBER	PCB-09	PCB-10	PCB-11	PCB-12			
TEST LOCATION N / E	See Testing Map						
ELEVATION	Subgrade	Subgrade	Subgrade	Subgrade			
DEPTH	4"	4"	4"	4"			
DENSITY COUNT	1875	1979	1908	2182			
MOISTURE COUNT	184	151	159	149			
WET DENSITY, pcf	134.5	131.9	133.7	127			
MOISTURE, pcf / %	15.6 / 13.2	12.5 / 10.5	13.3 / 11.0	12.3 / 10.7			
DRY DENSITY, pcf	118.8	119.4	120.4	114.7			
MATERIAL DESCRIPTION	CMT-01 CL	CMT-01 CL	CMT-01 CL	CMT-01 CL			
MAX DRY DENSITY, pcf	116.6	116.6	116.6	116.6			
OPTIMUM MOISTURE, %	12.0	12.0	12.0	12.0			
% COMPACTION	101.9%	102.4%	103.3%	98.4%			
DIFF FROM O.M.C.	0.9	-1.8	-1.3	-1.6			
PASS/FAIL (DENSITY)	PASS	PASS	PASS	PASS			
PASS/FAIL (MOISTURE)	PASS	PASS	PASS	PASS			

SPECIFICATIONS:
95 **% STANDARD / MODIFIED**
+ / - 3 **% OF O.M.C.**

DAILY STANDARD COUNTS:
MOISTURE **617**
DENSITY **2201**

TESTED BY: **S. Casey** **CHECKED BY:** **P. Callahan** **DATE:** **10/8/2015**

GCS FORM S17
(MAY 1992)

GOLDER ASSOCIATES INC.

FIELD MOISTURE / DENSITY TEST RECORD
NUCLEAR GAUGE METHOD
ASTM D 3017 / 2922

PROJECT NUMBER: 1302962.CQA **PROJECT TITLE:** OU-3 RA Cover Systems
OWNER: Solutia, Inc Anniston, AL
LOCATION: PCB Cells Subgrade **DATE TESTED:** 10/7/2015

TEST NUMBER	PCB-13	PCB-14	PCB-15	PCB-16			
TEST LOCATION N / E	See Testing Map						
ELEVATION	Subgrade	Subgrade	Subgrade	Subgrade			
DEPTH	4"	4"	4"	4"			
DENSITY COUNT	2073	2203	1995	2091			
MOISTURE COUNT	168	162	174	168			
WET DENSITY, pcf	128.9	125.9	130.8	128.5			
MOISTURE, pcf / %	14.1 / 12.3	13.6 / 12.1	14.7 / 12.7	14.1 / 12.4			
DRY DENSITY, pcf	114.8	112.3	116.1	114.3			
MATERIAL DESCRIPTION	CMT-02 CL	CMT-03 CL	CMT-03 CL	CMT-02 CL			
MAX DRY DENSITY, pcf	119.0	117.5	117.5	119.0			
OPTIMUM MOISTURE, %	12.0	13.0	13.0	12.0			
% COMPACTION	96.5%	95.6%	98.8%	96.1%			
DIFF FROM O.M.C.	0.3	-0.9	-0.3	0.4			
PASS/FAIL (DENSITY)	PASS	PASS	PASS	PASS			
PASS/FAIL (MOISTURE)	PASS	PASS	PASS	PASS			

SPECIFICATIONS:
95 **% STANDARD / MODIFIED**
+ / - 3 **% OF O.M.C.**

DAILY STANDARD COUNTS:
MOISTURE **617**
DENSITY **2201**

TESTED BY: **S. Casey / P. Callahan** **CHECKED BY:** **P. Callahan** **DATE:** **10/12/2015**

GCS FORM S17
(MAY 1992)

GOLDER ASSOCIATES INC.

FIELD MOISTURE / DENSITY TEST RECORD
NUCLEAR GAUGE METHOD
ASTM D 3017 / 2922

PROJECT NUMBER: 1302962.CQA **PROJECT TITLE:** OU-3 RA Cover Systems
OWNER: Solutia, Inc Anniston, AL
LOCATION: PCB Cells Subgrade **DATE TESTED:** 10/9/2015

TEST NUMBER	PCB-17	PCB-18	PCB-19	PCB-20			
TEST LOCATION N / E	See Testing Map						
ELEVATION	Subgrade	Subgrade	Subgrade	Subgrade			
DEPTH	4"	4"	4"	4"			
DENSITY COUNT	2201	2053	2099	2173			
MOISTURE COUNT	163	154	125	134			
WET DENSITY, pcf	126.4	130	129	129.1			
MOISTURE, pcf / %	13.6 / 12.1	12.8 / 10.9	10.0 / 8.4	13.1 / 10.9			
DRY DENSITY, pcf	112.8	117.2	119.0	116.4			
MATERIAL DESCRIPTION	CMT-03 CL	CMT-03 CL	CMT-03 CL	CMT-03 CL			
MAX DRY DENSITY, pcf	117.5	117.5	117.5	117.5			
OPTIMUM MOISTURE, %	13	13	13	13			
% COMPACTION	96.0%	99.7%	101.3%	99.1%			
DIFF FROM O.M.C.	-0.9	-2.1	-4.6	-2.1			
PASS/FAIL (DENSITY)	PASS	PASS	PASS	PASS			
PASS/FAIL (MOISTURE)	PASS	PASS	FAIL	PASS			

SPECIFICATIONS:
95 **% STANDARD / MODIFIED**
+ / - 3 **% OF O.M.C.**

DAILY STANDARD COUNTS:
MOISTURE **619**
DENSITY **2185**

TESTED BY: **P. Callahan** **CHECKED BY:** **S. Moeller** **DATE:** **10/12/2015**

GCS FORM S17
(MAY 1992)

GOLDER ASSOCIATES INC.

G:\$Archive H\9433680 - Solutia\OU-3 RA Construction\AsBuilt\PCB Cells Subgrade Density Testing\Production\1302962CQAE3 PCB Cells Subgrade Density Testing.dwg | Layout: 01 Density Test | Modified: SPiechota 06/08/2017 11:33 AM | Plotted: SPiechota 06/08/2017

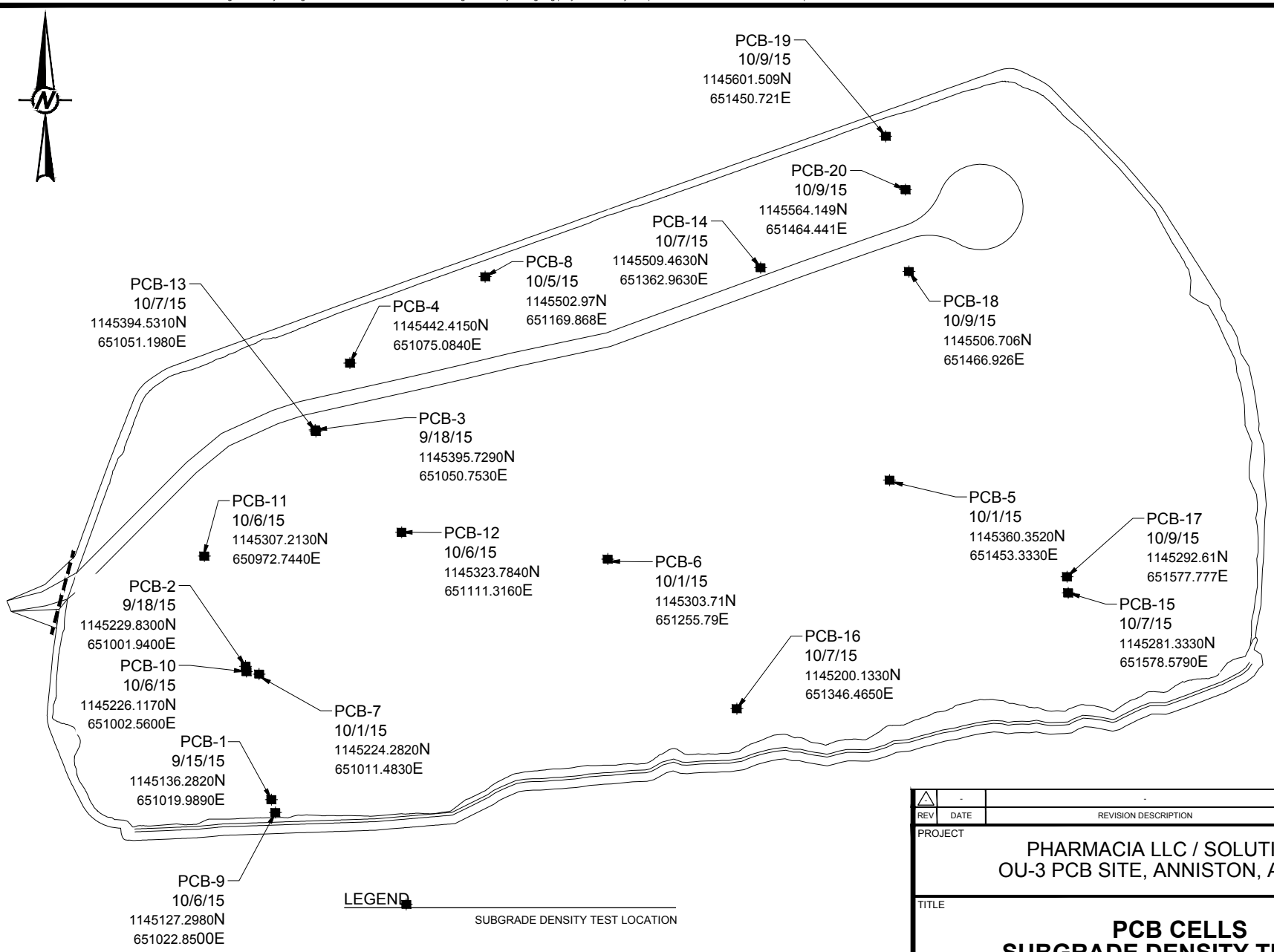

REV	DATE	REVISION DESCRIPTION	DES	CADD	CHK	RVW
0	-	-	-	-	-	-

PROJECT

PHARMACIA LLC / SOLUTIA INC.
OU-3 PCB SITE, ANNISTON, ALABAMA

TITLE

PCB CELLS SUBGRADE DENSITY TESTING

Golder Associates

PROJECT No.		1302962CQA	FILE No.	1302962CQAE3 PCB Cells Subgrade Density Testing
DESIGN	-	-	SCALE	AS SHOWN
CADD	SEP	06/08/17	FIGURE	
CHECK	ARF	06/08/17		E3
REVIEW	SJM	12/22/17		

FIELD DENSITY TEST RECORD
DRIVE CYLINDER METHOD
ASTM D 2937

PROJECT NUMBER:	1032962.CQA	**PROJECT TITLE:**	OU-3 RA Cover System
OWNER:	Solutia Inc.	**CONTRACTOR:**	Taylor Corp.
SITE LOCATION:	Anniston, AL		
TEST NUMBER:	PCB DC-1	**DATE TESTED:**	9/22/2015
LOCATION:	PCB Cells subgrade soil (see map)	**ELEVATION:**	0"

	IN SITU DENSITY DETERMINATION			TEST RESULTS		
A	CYLINDER NUMBER		1	PROCTOR CURVE NO.	CMT-01	
B	WT. CYLINDER + SOIL, g		2490	☐ CHECK POINT	☐ VISUALLY	
C	CYLINDER WT., g		621			
D	WT. OF SOIL, g	B - C	1869	☐ RAPID 3-POINT	☐ OTHER	
E	WT. OF SOIL, lb	D / 453.59	4.12			
F	CYLINDER VOLUME, cu ft		0.0333	MAX DRY DENSITY, pcf	116.6	
G	WET DENSITY, pcf	E / 0.0333	123.7	OPT. MOISTURE CONTENT, %	12.3%	
	MOISTURE CONTENT DETERMINATION		OVEN DRY	PERCENT COMPACTION	96.2%	
			QUICK FRY	DIFFERENCE FROM O.M.C.	-2.0%	
			MICROWAVE			
			OTHER	SPECIFICATIONS:		
H	CONTAINER NUMBER		NA	95 % STANDARD/MODIFIED		
I	WT. WET SOIL+CONTAINER, g		385.3			
J	WT. DRY SOIL+CONTAINER, g		367.8	+/- 3 % OF O.M.C.		
K	WT. CONTAINER, g		197.9			
L	WT. WATER, g	I - J	17.5	RESULTS:		
M	WT. DRY SOIL, g	J - K	169.9		PASS	FAIL
N	MOISTURE CONTENT, %	(L / M)*100	10.3%	DENSITY	PASS	
O	DRY DENSITY, pcf	G / (1+N/100)	112.2	MOISTURE	PASS	

MATERIAL DESCRIPTION:

Soil from CMT Borrow Area

Tested at same location as nuke gauge PCB-1

REMARKS:

☐ SEE ATTACHED SHEET FOR PROCTOR CURVE SELECTION INFORMATION

TESTED BY: TPC / SC **CHECKED BY:** TPC **DATE:** 9/22/2015

GCS FORM: S14

(MAY 1992)

GOLDER ASSOCIATES INC.

FIELD DENSITY TEST RECORD
DRIVE CYLINDER METHOD
ASTM D 2937

PROJECT NUMBER:	1032962.CQA	**PROJECT TITLE:**	OU-3 RA Cover System
OWNER:	Solutia Inc.	**CONTRACTOR:**	Taylor Corp.
SITE LOCATION:	Anniston, AL		
TEST NUMBER:	PCB DC-2	**DATE TESTED:**	9/22/2015
LOCATION:	PCB Cells subgrade soil (see map)	**ELEVATION:**	0"

	IN SITU DENSITY DETERMINATION			TEST RESULTS		
A	CYLINDER NUMBER		2	PROCTOR CURVE NO.	CMT-01	
B	WT. CYLINDER + SOIL, g		2347	☐ CHECK POINT	☐ VISUALLY	
C	CYLINDER WT., g		609			
D	WT. OF SOIL, g	B - C	1738	☐ RAPID 3-POINT	☐ OTHER	
E	WT. OF SOIL, lb	D / 453.59	3.83			
F	CYLINDER VOLUME, cu ft		0.0333	MAX DRY DENSITY, pcf	116.6	
G	WET DENSITY, pcf	E / 0.0333	115.1	OPT. MOISTURE CONTENT, %	12.3%	
	MOISTURE CONTENT DETERMINATION		OVEN DRY	PERCENT COMPACTION	91.5%	
			QUICK FRY	DIFFERENCE FROM O.M.C.	-4.4%	
			MICROWAVE			
			OTHER	SPECIFICATIONS:		
H	CONTAINER NUMBER		2	95 % STANDARD/MODIFIED		
I	WT. WET SOIL+CONTAINER, g		378.6			
J	WT. DRY SOIL+CONTAINER, g		365.4	+/- 3 % OF O.M.C.		
K	WT. CONTAINER, g		197.9			
L	WT. WATER, g	I - J	13.2	RESULTS:		
M	WT. DRY SOIL, g	J - K	167.5		PASS	FAIL
N	MOISTURE CONTENT, %	(L / M)*100	7.9%	DENSITY		FAIL
O	DRY DENSITY, pcf	G / (1+N/100)	106.7	MOISTURE		FAIL

MATERIAL DESCRIPTION:

Soil from CMT Borrow Area

Tested at same location as nuke gauge PCB-2

REMARKS:

☐ SEE ATTACHED SHEET FOR PROCTOR CURVE SELECTION INFORMATION

TESTED BY: TPC / SC **CHECKED BY:** TPC **DATE:** 9/22/2015

GCS FORM: S14

(MAY 1992)

GOLDER ASSOCIATES INC.

FIELD DENSITY TEST RECORD
DRIVE CYLINDER METHOD
ASTM D 2937

PROJECT NUMBER:	1032962.CQA	**PROJECT TITLE:**	OU-3 RA Cover System
OWNER:	Solutia Inc.	**CONTRACTOR:**	Taylor Corp.
SITE LOCATION:	Anniston, AL		
TEST NUMBER:	PCB DC-2.1	**DATE TESTED:**	10/7/2015
LOCATION:	PCB Cells subgrade soil (see map)	**ELEVATION:**	0"

	IN SITU DENSITY DETERMINATION			TEST RESULTS
A	CYLINDER NUMBER		1	PROCTOR CURVE NO. CMT-02
B	WT. CYLINDER + SOIL, g		2587	☐ CHECK POINT ☐ VISUALLY
C	CYLINDER WT., g		621	
D	WT. OF SOIL, g	B - C	1966	☐ RAPID 3-POINT ☐ OTHER
E	WT. OF SOIL, lb	D / 453.59	4.33	
F	CYLINDER VOLUME, cu ft		0.0333	MAX DRY DENSITY, pcf 116.6
G	WET DENSITY, pcf	E / 0.0333	130.2	OPT. MOISTURE CONTENT, % 12.3%
	MOISTURE CONTENT DETERMINATION		OVEN DRY	PERCENT COMPACTION 100.5%
			QUICK FRY	DIFFERENCE FROM O.M.C. -1.2%
			MICROWAVE	
			OTHER	SPECIFICATIONS:
H	CONTAINER NUMBER		3	95 % STANDARD/MODIFIED
I	WT. WET SOIL+CONTAINER, g		657.2	
J	WT. DRY SOIL+CONTAINER, g		637.2	+/- 3 % OF O.M.C.
K	WT. CONTAINER, g		456.8	
L	WT. WATER, g	I - J	20	RESULTS:
M	WT. DRY SOIL, g	J - K	180.4	PASS / FAIL
N	MOISTURE CONTENT, %	(L / M)*100	11.1%	DENSITY PASS
O	DRY DENSITY, pcf	G / (1+N/100)	117.2	MOISTURE PASS

MATERIAL DESCRIPTION:

Soil from CMT Borrow Area, PCB Subgrade 10 ft west of PCB-16 nuke gage test

REMARKS:

☐ SEE ATTACHED SHEET FOR PROCTOR CURVE SELECTION INFORMATION

TESTED BY: TPC / SC **CHECKED BY:** TPC **DATE:** 9/22/2015

GCS FORM: S14

(MAY 1992)

GOLDER ASSOCIATES INC.

FIELD DENSITY TEST RECORD
DRIVE CYLINDER METHOD
ASTM D 2937

PROJECT NUMBER:	1032962.CQA	**PROJECT TITLE:**	OU-3 RA Cover System
OWNER:	Solutia Inc.	**CONTRACTOR:**	Taylor Corp.
SITE LOCATION:	Anniston, AL		
TEST NUMBER:	PCB DC-3	**DATE TESTED:**	9/22/2015
LOCATION:	PCB Cells subgrade soil (see map)	**ELEVATION:**	0"

	IN SITU DENSITY DETERMINATION			TEST RESULTS		
A	CYLINDER NUMBER		2	PROCTOR CURVE NO.	CMT-01	
B	WT. CYLINDER + SOIL, g		2281	☐ CHECK POINT	☐ VISUALLY	
C	CYLINDER WT., g		609			
D	WT. OF SOIL, g	B - C	1672	☐ RAPID 3-POINT	☐ OTHER	
E	WT. OF SOIL, lb	D / 453.59	3.69			
F	CYLINDER VOLUME, cu ft		0.0333	MAX DRY DENSITY, pcf	116.6	
G	WET DENSITY, pcf	E / 0.0333	110.7	OPT. MOISTURE CONTENT, %	12.3%	
	MOISTURE CONTENT DETERMINATION		OVEN DRY	PERCENT COMPACTION	85.9%	
			QUICK FRY	DIFFERENCE FROM O.M.C.	-1.8%	
			MICROWAVE			
			OTHER	SPECIFICATIONS:		
H	CONTAINER NUMBER		2	95 % STANDARD/MODIFIED		
I	WT. WET SOIL+CONTAINER, g		382.5			
J	WT. DRY SOIL+CONTAINER, g		364.9	+/- 3 % OF O.M.C.		
K	WT. CONTAINER, g		197.9			
L	WT. WATER, g	I - J	17.6	RESULTS:		
M	WT. DRY SOIL, g	J - K	167		PASS	FAIL
N	MOISTURE CONTENT, %	(L / M)*100	10.5%	DENSITY		FAIL
O	DRY DENSITY, pcf	G / (1+N/100)	100.1	MOISTURE	PASS	

MATERIAL DESCRIPTION:

Soil from CMT Borrow Area

Tested at same location as nuke gauge PCB-3

REMARKS:

☐ SEE ATTACHED SHEET FOR PROCTOR CURVE SELECTION INFORMATION

TESTED BY: TPC / SC **CHECKED BY:** TPC **DATE:** 9/22/2015

GCS FORM: S14

(MAY 1992)

GOLDER ASSOCIATES INC.

FIELD DENSITY TEST RECORD
DRIVE CYLINDER METHOD
ASTM D 2937

PROJECT NUMBER:	1032962.CQA	**PROJECT TITLE:**	OU-3 RA Cover System
OWNER:	Solutia Inc.	**CONTRACTOR:**	Taylor Corp.
SITE LOCATION:	Anniston, AL		
TEST NUMBER:	PCB DC-3.1	**DATE TESTED:**	10/15/2015
LOCATION:	PCB Cells subgrade soil (see map)	**ELEVATION:**	0"

	IN SITU DENSITY DETERMINATION			TEST RESULTS		
A	CYLINDER NUMBER		1	PROCTOR CURVE NO.	CMT-01	
B	WT. CYLINDER + SOIL, g		2520	☐ CHECK POINT	☐ VISUALLY	
C	CYLINDER WT., g		620			
D	WT. OF SOIL, g	B - C	1900	☐ RAPID 3-POINT	☐ OTHER	
E	WT. OF SOIL, lb	D / 453.59	4.19			
F	CYLINDER VOLUME, cu ft		0.0333	MAX DRY DENSITY, pcf	117.5	
G	WET DENSITY, pcf	E / 0.0333	125.8	OPT. MOISTURE CONTENT, %	13.0%	
	MOISTURE CONTENT DETERMINATION		OVEN DRY	PERCENT COMPACTION	95.6%	
			QUICK FRY	DIFFERENCE FROM O.M.C.	-1.0%	
			MICROWAVE			
			OTHER	SPECIFICATIONS:		
H	CONTAINER NUMBER		3	95 % STANDARD/MODIFIED		
I	WT. WET SOIL+CONTAINER, g		605			
J	WT. DRY SOIL+CONTAINER, g		589.1	+/- 3 % OF O.M.C.		
K	WT. CONTAINER, g		456.9			
L	WT. WATER, g	I - J	15.9	RESULTS:		
M	WT. DRY SOIL, g	J - K	132.2		PASS	FAIL
N	MOISTURE CONTENT, %	(L / M)*100	12.0%	DENSITY	PASS	
O	DRY DENSITY, pcf	G / (1+N/100)	112.3	MOISTURE	PASS	

MATERIAL DESCRIPTION:

Soil from CMT Borrow Area

Tested at same location as nuke gauge PCB-3

REMARKS:

☐ SEE ATTACHED SHEET FOR PROCTOR CURVE SELECTION INFORMATION

TESTED BY: TPC / SC **CHECKED BY:** TPC **DATE:** 9/22/2015

GCS FORM: S14

(MAY 1992)

GOLDER ASSOCIATES INC.

FIELD DENSITY TEST RECORD
DRIVE CYLINDER METHOD
ASTM D 2937

PROJECT NUMBER:	1032962.CQA	**PROJECT TITLE:**	OU-3 RA Cover System
OWNER:	Solutia Inc.	**CONTRACTOR:**	Taylor Corp.
SITE LOCATION:	Anniston, AL		
TEST NUMBER:	PCB DC-4	**DATE TESTED:**	10/15/2015
LOCATION:	PCB Cells subgrade soil (see map)	**ELEVATION:**	0"

	IN SITU DENSITY DETERMINATION			TEST RESULTS		
A	CYLINDER NUMBER		1	PROCTOR CURVE NO.	CMT-01	
B	WT. CYLINDER + SOIL, g		2455	☐ CHECK POINT	☐ VISUALLY	
C	CYLINDER WT., g		621			
D	WT. OF SOIL, g	B - C	1834	☐ RAPID 3-POINT	☐ OTHER	
E	WT. OF SOIL, lb	D / 453.59	4.04			
F	CYLINDER VOLUME, cu ft		0.0333	MAX DRY DENSITY, pcf	116.6	
G	WET DENSITY, pcf	E / 0.0333	121.4	OPT. MOISTURE CONTENT, %	12.3%	
	MOISTURE CONTENT DETERMINATION		OVEN DRY	PERCENT COMPACTION	94.1%	
			QUICK FRY	DIFFERENCE FROM O.M.C.	-1.6%	
			MICROWAVE			
			OTHER	SPECIFICATIONS:		
H	CONTAINER NUMBER		1	95 % STANDARD/MODIFIED		
I	WT. WET SOIL+CONTAINER, g		403.1			
J	WT. DRY SOIL+CONTAINER, g		382.9	+/- 3 % OF O.M.C.		
K	WT. CONTAINER, g		193.7			
L	WT. WATER, g	I - J	20.2	RESULTS:		
M	WT. DRY SOIL, g	J - K	189.2		PASS	FAIL
N	MOISTURE CONTENT, %	(L / M)*100	10.7%	DENSITY		FAIL
O	DRY DENSITY, pcf	G / (1+N/100)	109.7	MOISTURE	PASS	

MATERIAL DESCRIPTION:

Soil from CMT Borrow Area

Tested at same location as nuke gauge PCB-4

REMARKS:

☐ SEE ATTACHED SHEET FOR PROCTOR CURVE SELECTION INFORMATION

TESTED BY: TPC / SC **CHECKED BY:** TPC **DATE:** 9/22/2015

GCS FORM: S14

(MAY 1992)

GOLDER ASSOCIATES INC.

CERTIFICATE OF ACCEPTANCE OF SOIL SURFACE

GEOSYNTHETIC INSTALLER		PROJECT	
COMPANY	Plastic Fusion	LOCATION	Anniston, AL
ADDRESS	3455 Stanwood Blvd NE	PROJECT	OU3 RA Connstruction/Solutia
	Huntsville, AL	OWNER	Solutia
	35811		

I, the Undersigned, the duly authorized representative of

Solutia

do hereby accept the area of soil surface bounded by

P1 - P12

and shall be responsible for maintaining its integrity and suitability in accordance with the project specifications from this date to the completion of the installation.

NAME	SIGNATURE	TITLE	DATE
Shawn Casey		CQA	10/16/15

CERTIFICATE OF ACCEPTANCE RECEIVED BY QA / QC MANAGER

NAME	SIGNATURE	TITLE	DATE
Jimmy Rutch	S. R. QA	Safer	10/16/15

CERTIFICATE OF ACCEPTANCE RECEIVED BY OWNER

NAME	SIGNATURE	TITLE	DATE
George D Williams	(CM)		10-17-15

GOLDER FORM: G4-0699

(January 2005)

GOLDER ASSOCIATES INC.

CERTIFICATE OF ACCEPTANCE OF SOIL SURFACE

	GEOSYNTHETIC INSTALLER		PROJECT
COMPANY	Plastic Fusion	LOCATION	Anniston, AL
ADDRESS	3455 Stanwood Blvd NE	PROJECT	OU3 RA Connstruction/Solutia
	Huntsville, AL	OWNER	Solutia
	35811		

I, the Undersigned, the duly authorized representative of

do hereby accept the area of soil surface bounded by

P-13 through P26

and shall be responsible for maintaining its integrity and suitability in accordance with the project specifications from this date to the completion of the installation.

NAME	SIGNATURE	TITLE	DATE
Shawn Cassel		CQM	10/17/15

CERTIFICATE OF ACCEPTANCE RECEIVED BY QA / QC MANAGER

NAME	SIGNATURE	TITLE	DATE
Jimmy Clutch		Super	10/17/15

CERTIFICATE OF ACCEPTANCE RECEIVED BY OWNER

NAME	SIGNATURE	TITLE	DATE
George D Williams		-CM-	10-18

GOLDER FORM: G4-0699

(January 2005)

GOLDER ASSOCIATES INC.

CERTIFICATE OF ACCEPTANCE OF SOIL SURFACE

	GEOSYNTHETIC INSTALLER		PROJECT
COMPANY	Plastic Fusion	LOCATION	Anniston, AL
ADDRESS	3455 Stanwood Blvd NE	PROJECT	OU3 RA Connstruction/Solutia
	Huntsville, AL	OWNER	Solutia
	35811		

I, the Undersigned, the duly authorized representative of

Solutia

do hereby accept the area of soil surface bounded by

P26 - P31

and shall be responsible for maintaining its integrity and suitability in accordance with the project specifications from this date to the completion of the installation.

NAME	SIGNATURE	TITLE	DATE
SLaun Cosey		CQA	10/18/15

CERTIFICATE OF ACCEPTANCE RECEIVED BY QA / QC MANAGER

NAME	SIGNATURE	TITLE	DATE
Jimmy CRutch		SaPer	10/18/15

CERTIFICATE OF ACCEPTANCE RECEIVED BY OWNER

NAME	SIGNATURE	TITLE	DATE
Josh Threadgill		Const. Mangger	10/19/15

GOLDER FORM: G4-0699

(January 2005)

GOLDER ASSOCIATES INC.

CERTIFICATE OF ACCEPTANCE OF SOIL SURFACE

GEOSYNTHETIC INSTALLER		PROJECT	
COMPANY	Plastic Fusion	LOCATION	Anniston, AL
ADDRESS	3455 Stanwood Blvd NE	PROJECT	OU3 RA Connstruction/Solutia
	Huntsville, AL	OWNER	Solutia
	35811		

I, the Undersigned, the duly authorized representative of

Solutia

do hereby accept the area of soil surface bounded by

P32 - P44

and shall be responsible for maintaining its integrity and suitability in accordance with the project specifications from this date to the completion of the installation.

NAME	SIGNATURE	TITLE	DATE
Shane Casey		CQA	10/19/15

CERTIFICATE OF ACCEPTANCE RECEIVED BY QA / QC MANAGER

NAME	SIGNATURE	TITLE	DATE
Jimmy Crutch	J. R. C.	Super	10/19/15

CERTIFICATE OF ACCEPTANCE RECEIVED BY OWNER

NAME	SIGNATURE	TITLE	DATE
George D Williams		CM	10-20-2015

GOLDER FORM: G4-0699

(January 2005)

GOLDER ASSOCIATES INC.

CERTIFICATE OF ACCEPTANCE OF SOIL SURFACE

	GEOSYNTHETIC INSTALLER		PROJECT
COMPANY	Plastic Fusion	LOCATION	Anniston, AL
ADDRESS	3455 Stanwood Blvd NE	PROJECT	OU3 RA Connstruction/Solutia
	Huntsville, AL	OWNER	Solutia
	35811		

I, the Undersigned, the duly authorized representative of

Soultia

do hereby accept the area of soil surface bounded by

Panels 44 through P56

and shall be responsible for maintaining its integrity and suitability in accordance with the project specifications from this date to the completion of the installation.

NAME	SIGNATURE	TITLE	DATE
Shawn Casey		CQA	10/20/15

CERTIFICATE OF ACCEPTANCE RECEIVED BY QA / QC MANAGER

NAME	SIGNATURE	TITLE	DATE
Jimmy Crutch		Super	10/20/15

CERTIFICATE OF ACCEPTANCE RECEIVED BY OWNER

NAME	SIGNATURE	TITLE	DATE
Josh Threadgill		Construction Mngr.	10/21/15

GOLDER FORM: G4-0699

(January 2005)

GOLDER ASSOCIATES INC.

CERTIFICATE OF ACCEPTANCE OF SOIL SURFACE

GEOSYNTHETIC INSTALLER		PROJECT	
COMPANY	Plastic Fusion	LOCATION	Anniston, AL
ADDRESS	3455 Stanwood Blvd NE	PROJECT	OU3 RA Connstruction/Solutia
	Huntsville, AL	OWNER	Solutia
	35811		

I, the Undersigned, the duly authorized representative of

Solutia

do hereby accept the area of soil surface bounded by

P57 thrusy P64

and shall be responsible for maintaining its integrity and suitability in accordance with the project specifications from this date to the completion of the installation.

NAME	SIGNATURE	TITLE	DATE
Shawn Cosey		CQA	10/21/15

CERTIFICATE OF ACCEPTANCE RECEIVED BY QA / QC MANAGER

NAME	SIGNATURE	TITLE	DATE
Jimmy Crutch		SqRep	11/21/15

CERTIFICATE OF ACCEPTANCE RECEIVED BY OWNER

NAME	SIGNATURE	TITLE	DATE
Josh Threadgill		Construction Mngr.	10/21/15

GOLDER FORM: G4-0699

(January 2005)

GOLDER ASSOCIATES INC.

APPENDIX E4

Autoclave Unit Area

FIELD MOISTURE / DENSITY TEST RECORD
NUCLEAR GAUGE METHOD
ASTM D 3017 / 2922

PROJECT NUMBER: 1302962.CQA **PROJECT TITLE:** OU-3 RA Cover Systems
OWNER: Solutia, Inc Anniston, AL
LOCATION: Autoclave Concrete Cover **DATE TESTED:** 8/20/2015

TEST NUMBER	AC-01	AC-01a	AC-02	AC-03	AC-03a		
TEST LOCATION N / E	See map for testing location details						
ELEVATION	Surface of DGA						
DEPTH	4-inches	4-inches	4-inches	4-inches	4-inches		
DENSITY COUNT	2140	1810	1922	2106	2026		
MOISTURE COUNT	59	52	55	62	61		
WET DENSITY, pcf	130.9	137.3	135.1	127.9	133.6		
MOISTURE, pcf / %	3.4	2.3	2.6	2.6	2.7		
DRY DENSITY, pcf	126.6	134.2	131.7	124.7	130.1		
MATERIAL DESCRIPTION	DGA	DGA	DGA	DGA	DGA		
MAX DRY DENSITY, pcf	137.2	137.2	137.2	137.2	137.2		
OPTIMUM MOISTURE, %	6.6	6.6	6.6	6.6	6.6		
% COMPACTION	92%	98%	96%	91%	95%		
DIFF FROM O.M.C.	-3.2	-4.3	-4	-4	-3.9		
PASS/FAIL (DENSITY)	FAIL	PASS	PASS	FAIL	FAIL		
PASS/FAIL (MOISTURE)	FAIL	FAIL	FAIL	FAIL	FAIL		

SPECIFICATIONS:
95 **% STANDARD / MODIFIED**
+ / - 3 **% OF O.M.C.**

DAILY STANDARD COUNTS:
MOISTURE
DENSITY

TESTED BY: **P. Callahan** **CHECKED BY:** **S. Moeller** **DATE:** **8/21/2015**

GCS FORM S17
(MAY 1992)

GOLDER ASSOCIATES INC.

FIELD MOISTURE / DENSITY TEST RECORD
NUCLEAR GAUGE METHOD
ASTM D 3017 / 2922

PROJECT NUMBER: 1302962.CQA **PROJECT TITLE:** OU-3 RA Cover Systems
OWNER: Solutia, Inc Anniston, AL
LOCATION: Autoclave Concrete Cover **DATE TESTED:** 8/21/2015

TEST NUMBER	AC-04	AC-05	AC-06				
TEST LOCATION N / E	See map for testing location details						
ELEVATION	Surface of DGA						
DEPTH	4-inches	4-inches	4-inches				
DENSITY COUNT	1773	1821	1839				
MOISTURE COUNT	60	52	55				
WET DENSITY, pcf	137.8	139.4	137.5				
MOISTURE, pcf / %	2.9	4.4	4.9				
DRY DENSITY, pcf	133.9	133.5	131.1				
MATERIAL DESCRIPTION	DGA	DGA	DGA				
MAX DRY DENSITY, pcf	137.2	137.2	137.2				
OPTIMUM MOISTURE, %	6.6	6.6	6.6				
% COMPACTION	98%	97%	96%				
DIFF FROM O.M.C.	-3.7	-2.2	-1.7				
PASS/FAIL (DENSITY)	PASS	PASS	PASS				
PASS/FAIL (MOISTURE)	FAIL	PASS	PASS				

SPECIFICATIONS:
95 **% STANDARD / MODIFIED**
+ / - 3 **% OF O.M.C.**

DAILY STANDARD COUNTS:
MOISTURE
DENSITY

TESTED BY: **P. Callahan** **CHECKED BY:** **S. Moeller** **DATE:** **8/21/2015**

GCS FORM S17
(MAY 1992)

Tests 4, 5, and 6 were retests of Tests 1, 2, and 3.
Slight variation in moisture content in Test AC-04 approved by Certifying Engineer.

GOLDER ASSOCIATES INC.

APPENDIX F

GEOMEMBRANE MATERIAL INVENTORY AND CONFORMANCE TESTING

APPENDIX F1

Material Inventory and Roll Deployment

Geomembrane Roll Allocation by Area

Roll Number	*Area*	*Panel*
3103	A	**A1**
3103	A	**A2**
3103	A	**A3**
3103	A	**A4**
3103	A	**A5**
3105	A	**A6**
3105	A	**A7**
3105	A	**A8**
3105	A	**A9**
3101	A	**A10**
3101	A	**A11**
3101	A	**A12**
3074	A	**A13**
3074	A	**A14**
3074	A	**A15**
3088	A	**A16**
3088	A	**A17**
3072	A	**A18**
3072	A	**A19**
3073	A	**A20**
3073	A	**A21**
3073	A	**A22**
3073	A	**A23**
3077	A	**A24**
3077	A	**A25**
3069	A	**A26**
3069	A	**A27**
3084	A	**A28**
3084	A	**A29**
3075	A	**A30**
3075	A	**A31**
3098	A	**A32**
3098	A	**A33**
3098	E	**E1**
3098	E	**E2**
3085	E	**E3**
3085	E	**E4**
3085	E	**E5**
3085	E	**E6**
3085	E	**E7**
3085	E	**E8**
3098	E	**E9**
3085	E	**E10**
3085	E	**E11**
3076	E	**E12**
3085	E	**E13**

Geomembrane Roll Allocation by Area

Roll Number	*Area*	*Panel*
3085	E	**E14**
3098	E	**E15**
3076	E	**E16**
3106	PCB Cells	**P1**
3078	PCB Cells	**P2**
3078	PCB Cells	**P3**
3078	PCB Cells	**P4**
3078	PCB Cells	**P5**
3078	PCB Cells	**P6**
3106	PCB Cells	**P7**
3106	PCB Cells	**P8**
3079	PCB Cells	**P9**
3079	PCB Cells	**P10**
3081	PCB Cells	**P11**
3081	PCB Cells	**P12**
3081	PCB Cells	**P13**
3070	PCB Cells	**P14**
3070	PCB Cells	**P15**
3071	PCB Cells	**P16**
3070	PCB Cells	**P17**
3070	PCB Cells	**P18**
3096	PCB Cells	**P19**
3096	PCB Cells	**P20**
3095	PCB Cells	**P21**
3095	PCB Cells	**P22**
3095	PCB Cells	**P23**
3100	PCB Cells	**P24**
3100	PCB Cells	**P25**
3080	PCB Cells	**P26**
3080	PCB Cells	**P27**
3080	PCB Cells	**P28**
3093	PCB Cells	**P29**
3093	PCB Cells	**P30**
3082	PCB Cells	**P31**
3082	PCB Cells	**P32**
3099	PCB Cells	**P33**
3099	PCB Cells	**P34**
3099	PCB Cells	**P35**
3097	PCB Cells	**P36**
3097	PCB Cells	**P37**
3097	PCB Cells	**P38**
3094	PCB Cells	**P39**
3094	PCB Cells	**P40**
3083	PCB Cells	**P41**
3083	PCB Cells	**P42**
3083	PCB Cells	**P43**

Geomembrane Roll Allocation by Area

Roll Number	*Area*	*Panel*
3087	PCB Cells	**P44**
3087	PCB Cells	**P45**
3087	PCB Cells	**P46**
3089	PCB Cells	**P47**
3089	PCB Cells	**P48**
3107	PCB Cells	**P49**
3107	PCB Cells	**P50**
3107	PCB Cells	**P51**
3107	PCB Cells	**P52**
3086	PCB Cells	**P53**
3086	PCB Cells	**P54**
3086	PCB Cells	**P55**
3092	PCB Cells	**P56**
3092	PCB Cells	**P57**
3092	PCB Cells	**P58**
3104	PCB Cells	**P59**
3104	PCB Cells	**P60**
3104	PCB Cells	**P61**
3104	PCB Cells	**P62**
3104	PCB Cells	**P63**
3104	PCB Cells	**P64**

Shipping Order – Packing List – Original – Not Negotiable

GSE Environmental, LLC Houston, TX

Number BL–0090813

Received at **Houston, TX** from GSE Environmental, LLC the property described below, in apparent good order, except as noted (contents and condition of packages unknown), marked, consigned, and destined as indicated below, which said Carrier agrees to carry to the place of delivery at said destination. It is mutually agreed as to each Carrier of all or any said property, over all or any portion of said route to destination, and as to each party at any time interested in all or any of said property, that every service performed hereunder shall be subject to the rates and contract agreed to in writing by GSE Environmental, LLC and Carrier. GSE Environmental, LLC's obligation to pay freight charges for the shipment is conditioned on (1) the existence of a separate written contract with the Carrier transporting the freight and (2) the Carrier's name appearing on this Bill of Lading, and other carriers must look solely to a party other than GSE Environmental, LLC for payment.

Ship to: PFF Solutia
Taylor Corporation
Pharmacia LLC/ Solutia Inc.
702 Clydesdale Avenue
Tyler Hollis @ 256–419–1082
Ellis Benett– 256–835–1800
Anniston, AL 36201

Roll Certifications included

Ship date: 09/15/2015
Branch plant: 1500
Sales order: SO–076558

Shipping instructions: Tentative ship date is 7/27/15. do not ship until release from Paul . Bennett 256–835–1800

Shipment: 24 hour pre call Ellis

Truck 1

Line no.	Shipped quantity	Product code	Unit	Kind of Package, Description of Articles, Special Marks and Exceptions	Weight
	173,250.00	HDT–040GE–BBB–B–W0	SF	GSE HD 2S Textured 040 mil GM13 22.5' W	
1				108183086 GSE HD 2S Textured 040 mil GM13 22.5' W	3,814.00
2				108183087 GSE HD 2S Textured 040 mil GM13 22.5' W	3,818.00
3				108183089 GSE HD 2S Textured 040 mil GM13 22.5' W	3,830.00
4				108183090 GSE HD 2S Textured 040 mil GM13 22.5' W	3,838.00
5				108183091 GSE HD 2S Textured 040 mil GM13 22.5' W	3,836.00
6				108183092 GSE HD 2S Textured 040 mil GM13 22.5' W	3,826.00
7				108183094 GSE HD 2S Textured 040 mil GM13 22.5' W	3,850.00
8				108183095 GSE HD 2S Textured 040 mil GM13 22.5' W	3,850.00
9				108183096 GSE HD 2S Textured 040 mil GM13 22.5' W	3,862.00
10				108183097 GSE HD 2S Textured 040 mil GM13 22.5' W	3,850.00
11				108183100 GSE HD 2S Textured 040 mil GM13 22.5' W	3,838.00
	1.00	FREIGHTSHT001	EA	DOM. SHIPPING CHARGE Estimated freight. Actual freight will be determined at time of shipment	
12				DOM. SHIPPING CHARGE Estimated freight. Actual freight will be determined at time of shipment	0.00

DELIVERY DATE
SEP 17 2015

Total quantity: 173,251.00 **Total weight:** 42,212.00

Freight charges are prepaid unless marked collect.

Check box if collect ☐

Customer PO number
P15895

If this shipment is to be delivered to consignee, consignor shall sign the following statement.

Carrier may decline to deliver this shipment without payment of freight and all other lawful charges.

MP
Signature of Consignor

Local Verification Signed
X MP

PRO Number
RR056152

Seal numbers

Truckers P.O. #
PO1350

Driver requirements:

1) Driver must pre call 24 hrs prior to delivery and on Friday for Monday delivery.
2) Driver must call (281) 230–6781 when unloaded.
3) Driver must call and advise any delay in transit.
4) A copy of this bill of lading must accompany Freight Invoice.

Carrier name: RED WOOD
Carrier signature: Tracy Markard
Date: 9-15-15

GSE Environmental, LLC

ROLL TEST DATA REPORT

GSE QC APPROVED

Report Date: Sep/15/2015

Sales Order No.	Customer Name	Project Location	Product Name	BOL Number
SO-076558	Plastic Fusion Fabricators, Inc.	Anniston AL US	HDT-040GE-BBB-B-W0	BL-0090813

Roll Number	Average Thickness ASTM D5994 (mils)	Minimum Thickness ASTM D5994 (mils)	Yield Strength ASTM D6693 (ppi) MD	Yield Strength ASTM D6693 (ppi) TD	Yield Elongation ASTM D6693 (%) MD	Yield Elongation ASTM D6693 (%) TD	Break Strength ASTM D6693 (ppi) MD	Break Strength ASTM D6693 (ppi) TD	Break Elongation ASTM D6693 (%) MD	Break Elongation ASTM D6693 (%) TD	Tear Resistance ASTM D1004 (lbs) MD	Tear Resistance ASTM D1004 (lbs) TD	Puncture Resistance ASTM D4833 (lbs)	Density ASTM D1505 (g/cc)	Carbon Black Content ASTM D4218 (%)	Carbon Black Dispersion ASTM D5596 (Views in Cat1-Cat2)	Asperity Height ASTM D7466 (mils) A Side	Asperity Height ASTM D7466 (mils) B Side
108183086	42	37	113	125	16	16	128	114	408	325	42	40	114	0.945	2.4	10	22	23
108183087	42	39	113	125	16	16	128	114	408	325	42	40	114	0.945	2.4	10	22	23
108183089	42	39	114	128	16	16	137	127	441	456	45	40	118	0.945	2.6	10	22	23
108183090	41	38	114	128	16	16	137	127	441	456	45	40	118	0.945	2.6	10	23	24
108183091	41	39	116	122	16	16	148	118	560	372	43	40	117	0.945	2.5	10	23	24
108183092	42	38	116	122	16	16	148	118	560	372	43	40	117	0.945	2.5	10	23	23
108183094	42	38	126	136	16	15	148	128	513	436	47	43	115	0.945	2.4	10	22	23
108183095	41	37	126	136	16	15	148	128	513	436	47	43	115	0.945	2.4	10	22	23
108183096	43	39	126	136	16	15	148	128	513	436	47	43	115	0.945	2.4	10	23	22
108183097	42	38	124	134	16	17	138	120	487	398	45	42	115	0.945	2.5	10	23	22
108183100	42	38	125	136	16	16	146	128	516	452	43	48	110	0.945	2.4	10	24	23

Truck 1

Laboratory Manager _____

This test report shall not be reproduced, except in full, without written approval of the laboratory.

GEOSYNTHETIC INVENTORY CONTROL LOG

PROJECT NUMBER: 130 2962CQA **PROJECT TITLE:** OU3 RA Construction
OWNER: Solutia
LOCATION: Anniston AL **CONTRACTOR:** Taylor

MATERIAL TYPE: GEOMEMBRANE GEONET GEOTEXTILE OTHER 1st truck
DATE OF ARRIVAL: 9/16/15 **DATE OF INVENTORY:** 9/16/15 @ 0800
MATERIAL MANUFACTURER: GSE **INVENTORY MONITOR:** SC
PRODUCT IDENTIFICATION: HDT - 40GS - BBB-B-WO **CONDITION IN TRUCK:** Good
TRUCK TYPE: Flat Bed **UNLOADING METHOD:** Loader/excavator

	ROLL NUMBER	BATCH OR LOT NO.	MATERIAL DIMENSIONS LENGTH	WIDTH	THICKNESS OR WEIGHT	QC CERT Y/N	CONF. SAMP. Y/N	OTHER	REMARKS
1	10818309U	✓	700	22.5	40 mil	✓			Textured
2	~~1818~~								↓
3	10818 3092		700	22.5'	40 mil	✓	✓		↓
4	10818 3091		700	22.5'	40 mil	✓			↓
5	10818 3087		700	22.5	40 mil	✓	✓		↓
6	10818 3086		700	22.5	40 mil	✓	✓		↓
7	10818 3097		700	22.5	40 mil	✓			↓
8	10818 3089		700	22.5	40 mil	✓			↓
9	10818 3095		700	22.5	40 mil	✓			↓
10	10818 3094		700	22.5	40 mil	✓			↓
11	10818 3096		700	22.5	40 mil	✓			↓
12	10818 3100		700	22.5	40 mil	✓			✓
13									
14									
15									
16									
17									
18									
19									
20									
21									
22									
23									
24									
25									

GCS FORM: G2
(JUNE 1992)

REVIEWED BY: _____ DATE: _____

GOLDER ASSOCIATES

All Roll #'s start w 10818

Shipping Order – Packing List – Original – Not Negotiable

GSE Environmental, LLC Houston, TX

Number BL-0090833

Received at **Houston, TX** from GSE Environmental, LLC the property described below, in apparent good order, except as noted (contents and condition of packages unknown), marked, consigned, and destined as indicated below, which said Carrier agrees to carry to the place of delivery at said destination. It is mutually agreed as to each Carrier of all or any said property, over all or any portion of said route to destination, and as to each party at any time interested in all or any of said property, that every service performed hereunder shall be subject to the rates and contract agreed to in writing by GSE Environmental, LLC and Carrier. GSE Environmental, LLC's obligation to pay freight charges for the shipment is conditioned on (1) the existence of a separate written contract with the Carrier transporting the freight and (2) the Carrier's name appearing on this Bill of Lading, and other carriers must look solely to a party other than GSE Environmental, LLC for payment.

Ship to: PFF Solutia
Taylor Corporation
Pharmacia LLC/ Solutia Inc.
702 Clydesdale Avenue
Tyler Hollis @ 256-419-1082
Ellis Benett- 256-835-1800
Anniston, AL 36201

Roll Certificatons

Ship date: 09/15/2015
Branch plant: 1500
Sales order: SO-076558

Shipping instructions: Tentative ship date is 7/27/15. do not ship until release from Paul . Bennett 256-835-1800

Shipment: 24 hour pre call Ellis

Truck #2

Line no.	Shipped quantity	Product code	Unit	Kind of Package, Description of Articles, Special Marks and Exceptions	Weight
	94,500.00	HDT-040GE-BBB-B-W0	SF	GSE HD 2S Textured 040 mil GM13 22.5' W	
1				108183070 GSE HD 2S Textured 040 mil GM13 22.5' W	3,912.00
2				108183078 GSE HD 2S Textured 040 mil GM13 22.5' W	3,848.00
3				108183079 GSE HD 2S Textured 040 mil GM13 22.5' W	3,868.00
4				108183080 GSE HD 2S Textured 040 mil GM13 22.5' W	3,858.00
5				108183081 GSE HD 2S Textured 040 mil GM13 22.5' W	3,828.00
6				108183082 GSE HD 2S Textured 040 mil GM13 22.5' W	3,854.00
	1,200.00	POLYLOCK00	LF	Polylock	
7				Polylock	0.00
	1.00	FREIGHTSHT001	EA	DOM. SHIPPING CHARGE Estimated freight. Actual freight will be determined at time of shipment	
8				DOM. SHIPPING CHARGE Estimated freight. Actual freight will be determined at time of shipment	0.00

DELIVERY DATE
SEP 17 2015

Total quantity: 95,701.00 **Total weight:** 23,168.00

Freight charges are prepaid unless marked collect.

Check box if collect ☐

Customer PO number
P15895

If this shipment is to be delivered to consignee, consignor shall sign the following statement.

Carrier may decline to deliver this shipment without payment of freight and all other lawful charges.

Signature of Consignor

Local Verification Signed

X

PRO Number
RR056154

Seal numbers

Truckers P.O. #
PO1350

Driver requirements:

1) Driver must pre call 24 hrs prior to delivery and on Friday for Monday delivery.
2) Driver must call (281) 230-6781 when unloaded.
3) Driver must call and advise any delay in transit.
4) A copy of this bill of lading must accompany Freight Invoice.

Carrier name: RED WOOD

Carrier signature:

Date: 9 09-15-15

GSE Environmental, LLC

ROLL TEST DATA REPORT

GSE QC APPROVED

Report Date: Sep/15/2015

Sales Order No.	Customer Name	Project Location	Product Name	BOL Number
SO-076558	Plastic Fusion Fabricators, Inc.	Anniston AL US	HDT-040GE-BBB-B-W0	BL-0090833

Roll Number	Average Thickness ASTM D5994 (mils)	Minimum Thickness ASTM D5994 (mils)	Yield Strength ASTM D6693 (ppi) MD	Yield Strength ASTM D6693 (ppi) TD	Yield Elongation ASTM D6693 (%) MD	Yield Elongation ASTM D6693 (%) TD	Break Strength ASTM D6693 (ppi) MD	Break Strength ASTM D6693 (ppi) TD	Break Elongation ASTM D6693 (%) MD	Break Elongation ASTM D6693 (%) TD	Tear Resistance ASTM D1004 (lbs) MD	Tear Resistance ASTM D1004 (lbs) TD	Puncture Resistance ASTM D4833 (lbs)	Density ASTM D1505 (g/cc)	Carbon Black Content ASTM D4218 (%)	Carbon Black Dispersion ASTM D5596 (Views in Cat1-Cat2)	Asperity Height ASTM D7466 (mils) A Side	Asperity Height ASTM D7466 (mils) B Side
108183070	43	39	107	120	16	16	154	117	549	384	42	37	119	0.945	2.6	10	22	24
108183078	41	36	118	128	16	16	144	121	503	454	43	42	117	0.945	2.4	10	24	24
108183079	42	36	123	128	16	16	151	123	520	373	47	43	119	0.945	2.4	10	24	24
108183080	41	37	123	128	16	16	151	123	520	373	47	43	119	0.945	2.4	10	23	23
108183081	42	37	123	128	16	16	151	123	520	373	47	43	119	0.945	2.4	10	23	23
108183082	42	37	122	136	16	16	138	121	485	395	45	41	119	0.945	2.4	10	23	23

Truck #2

Laboratory Manager _____

This test report shall not be reproduced, except in full, without written approval of the laboratory.

GEOSYNTHETIC INVENTORY CONTROL LOG

PROJECT NUMBER: 130 2962CQA
PROJECT TITLE: OU3 RA Construction
OWNER: Solutia
LOCATION: Anniston AL
CONTRACTOR: Taylor

MATERIAL TYPE: (GEOMEMBRANE) GEONET GEOTEXTILE OTHER
Truck 2
DATE OF ARRIVAL: 9/6/15
DATE OF INVENTORY: 9/6/15 @ 0946
MATERIAL MANUFACTURER: GSE
INVENTORY MONITOR: SC
PRODUCT IDENTIFICATION: HDT-040G3-BBB-B-WW
CONDITION IN TRUCK: good
TRUCK TYPE: Flat bed
UNLOADING METHOD: excavator

	ROLL NUMBER	BATCH OR LOT NO.	MATERIAL DIMENSIONS LENGTH	WIDTH	THICKNESS OR WEIGHT	QC CERT Y/N	CONF. SAMP. Y/N	OTHER	REMARKS
1	10818 3078		700	22.5	40 mil	✓			Textured
2	10818 3080		700	22.5	40 mil	✓	✓		
3	10818 3070		700	22.5	40 mil	✓			
4	10818 3081		700	22.5	40 mil	✓			
5	10818 3082		700	22.5	40 mil	✓			
6	10818 3079		700	22.5	40 mil	✓			
7									
8									
9									
10									
11									
12									
13									
14									
15									
16									
17									
18									
19									
20									
21									
22									
23									
24									
25									

GCS FORM: G2
(JUNE 1992)

REVIEWED BY: _____ DATE: _____

GOLDER ASSOCIATES

Truck #2 Also had 1200 Ft poly lock

Shipping Order – Packing List – Original – Not Negotiable

GSE Environmental, LLC Houston, TX

Number BL–0090837

Received at **Houston, TX** from GSE Environmental, LLC the property described below, in apparent good order, except as noted (contents and condition of packages unknown), marked, consigned, and destined as indicated below, which said Carrier agrees to carry to the place of delivery at said destination. It is mutually agreed as to each Carrier of all or any said property, over all or any portion of said route to destination, and as to each party at any time interested in all or any of said property, that every service performed hereunder shall be subject to the rates and contract agreed to in writing by GSE Environmental, LLC and Carrier. GSE Environmental, LLC's obligation to pay freight charges for the shipment is conditioned on (1) the existence of a separate written contract with the Carrier transporting the freight and (2) the Carrier's name appearing on this Bill of Lading, and other carriers must look solely to a party other than GSE Environmental, LLC for payment.

Ship to: PFF Solutia
Taylor Corporation
Pharmacia LLC/ Solutia Inc.
702 Clydesdale Avenue
Tyler Hollis @ 256–419–1082
Ellis Benett– 256–835–1800
Anniston, AL 36201

Roll Certifications received

Ship date: 09/15/2015
Branch plant: 1500
Sales order: SO–076558

Shipping instructions: Tentative ship date is 7/27/15. do not ship until release from Paul . Bennett 256–835–1800

Truck 3

Shipment: 24 hour pre call Ellis

Line no.	Shipped quantity	Product code	Unit	Kind of Package, Description of Articles, Special Marks and Exceptions	Weight
	157,500.00	HDT–040GE–BBB–B–W0	SF	GSE HD 2S Textured 040 mil GM13 22.5' W	
1				108183069 GSE HD 2S Textured 040 mil GM13 22.5' W	3,896.00
2				108183072 GSE HD 2S Textured 040 mil GM13 22.5' W	3,864.00
3				108183073 GSE HD 2S Textured 040 mil GM13 22.5' W	3,844.00
4				108183074 GSE HD 2S Textured 040 mil GM13 22.5' W	3,856.00
5				108183075 GSE HD 2S Textured 040 mil GM13 22.5' W	3,880.00
6				108183076 GSE HD 2S Textured 040 mil GM13 22.5' W	3,860.00
7				108183077 GSE HD 2S Textured 040 mil GM13 22.5' W	3,866.00
8				108183084 GSE HD 2S Textured 040 mil GM13 22.5' W	3,838.00
9				108183085 GSE HD 2S Textured 040 mil GM13 22.5' W	3,830.00
10				108183098 GSE HD 2S Textured 040 mil GM13 22.5' W	3,846.00
	1.00	FREIGHTSHT001	EA	DOM. SHIPPING CHARGE Estimated freight. Actual freight will be determined at time of shipment	
11				DOM. SHIPPING CHARGE Estimated freight. Actual freight will be determined at time of shipment	0.00

DELIVERY DATE
SEP 17 2015

Total quantity: 157,501.00 **Total weight:** 38,580.00

Freight charges are prepaid unless marked collect.

Check box if collect ☐

Customer PO number
P15895

If this shipment is to be delivered to consignee, consignor shall sign the following statement.

Carrier may decline to deliver this shipment without payment of freight and all other lawful charges.

Signature of Consignor

Local Verification Signed

X

PRO Number
RR056153

Seal numbers

Truckers P.O. #
PO1350

Driver requirements:

1) Driver must pre call 24 hrs prior to delivery and on Friday for Monday delivery.
2) Driver must call (281) 230–6781 when unloaded.
3) Driver must call and advise any delay in transit.
4) A copy of this bill of lading must accompany Freight Invoice.

Carrier name: RED WOOD

Carrier signature:

Date: 9.15.2015

GSE Environmental, LLC

ROLL TEST DATA REPORT

GSE QC APPROVED

Report Date: Sep/15/2015

Sales Order No.	Customer Name	Project Location	Product Name	BOL Number
SO-076558	Plastic Fusion Fabricators, Inc.	Anniston AL US	HDT-040GE-BBB-B-W0	BL-0090837

Roll Number	Average Thickness ASTM D5994 (mils)	Minimum Thickness ASTM D5994 (mils)	Yield Strength ASTM D6693 (ppi) MD	Yield Strength ASTM D6693 (ppi) TD	Yield Elongation ASTM D6693 (%) MD	Yield Elongation ASTM D6693 (%) TD	Break Strength ASTM D6693 (ppi) MD	Break Strength ASTM D6693 (ppi) TD	Break Elongation ASTM D6693 (%) MD	Break Elongation ASTM D6693 (%) TD	Tear Resistance ASTM D1004 (lbs) MD	Tear Resistance ASTM D1004 (lbs) TD	Puncture Resistance ASTM D4833 (lbs)	Density ASTM D1505 (g/cc)	Carbon Black Content ASTM D4218 (%)	Carbon Black Dispersion ASTM D5596 (Views in Cat1-Cat2)	Asperity Height ASTM D7466 (mils) A Side	Asperity Height ASTM D7466 (mils) B Side
108183069	41	36	111	124	16	15	135	122	468	368	43	40	101	0.945	2.6	10	23	24
108183072	42	40	107	120	16	16	154	117	549	384	42	37	119	0.945	2.6	10	22	23
108183073	42	39	117	124	16	16	132	128	331	422	42	40	115	0.945	2.4	10	22	23
108183074	42	39	117	124	16	16	132	128	331	422	42	40	115	0.945	2.4	10	23	23
108183075	43	36	117	124	16	16	132	128	331	422	42	40	115	0.945	2.4	10	23	23
108183076	41	37	118	128	16	16	144	121	503	454	43	42	117	0.945	2.4	10	24	24
108183077	40	38	118	128	16	16	144	121	503	454	43	42	117	0.945	2.4	10	24	24
108183084	42	37	122	136	16	16	138	121	485	395	45	41	119	0.945	2.4	10	32	24
108183085	41	36	113	125	16	16	128	114	408	325	42	40	114	0.945	2.4	10	32	24
108183098	42	37	124	134	16	17	138	120	487	398	45	42	115	0.945	2.5	10	23	22

Truck 3

Laboratory Manager _____

This test report shall not be reproduced, except in full, without written approval of the laboratory.

GEOSYNTHETIC INVENTORY CONTROL LOG

PROJECT NUMBER: 130 2962CQA
PROJECT TITLE: OU3 RA Construction
OWNER: Solutia
LOCATION: Anniston AL
CONTRACTOR: Taylor

MATERIAL TYPE: (GEOMEMBRANE) GEONET GEOTEXTILE OTHER Truck 3
DATE OF ARRIVAL: 9/1/15
MATERIAL MANUFACTURER: GSE
PRODUCT IDENTIFICATION: HDT-0406E-BBB-65-WO
TRUCK TYPE: Flat bed
DATE OF INVENTORY: 9/16/15 @ 1715
INVENTORY MONITOR: SC
CONDITION IN TRUCK: Good
UNLOADING METHOD: Loader

	ROLL NUMBER	BATCH OR LOT NO.	MATERIAL DIMENSIONS LENGTH	WIDTH	THICKNESS OR WEIGHT	QC CERT Y/N	CONF. SAMP. Y/N	OTHER	REMARKS
1	10818 3076		700	22.5	40 mil	✓			To Area
2	10818 3098		700	22.5	40 mil	✓	✓		↓
3	10818 3085		700	22.5	40 mil	✓			
4	10818 3084		700	22.5	40 mil	✓			
5	10818 3075		700	22.5	40 mil	✓			
6	10818 3077		700	22.5	40 mil	✓			
7	10818 3069		700	22.5	40 mil	✓	✓		
8	10818 3072		700	22.5	40 mil	✓			
9	10818 3073		700	22.5	40 mil	✓			
10	10818 3074		700	22.5	40 mil	✓			
11									
12									
13									
14									
15									
16									
17									
18									
19									
20									
21									
22									
23									
24									
25									

GCS FORM: G2
(JUNE 1992)

REVIEWED BY: _____ DATE: _____

GOLDER ASSOCIATES

Shipping Order – Packing List – Original – Not Negotiable

GSE Environmental, LLC Houston, TX

Number BL–0090851

Received at **Houston, TX** from GSE Environmental, LLC the property described below, in apparent good order, except as noted (contents and condition of packages unknown), marked, consigned, and destined as indicated below, which said Carrier agrees to carry to the place of delivery at said destination. It is mutually agreed as to each Carrier of all or any said property, over all or any portion of said route to destination, and as to each party at any time interested in all or any of said property, that every service performed hereunder shall be subject to the rates and contract agreed to in writing by GSE Environmental, LLC and Carrier. GSE Environmental, LLC's obligation to pay freight charges for the shipment is conditioned on (1) the existence of a separate written contract with the Carrier transporting the freight and (2) the Carrier's name appearing on this Bill of Lading, and other carriers must look solely to a party other than GSE Environmental, LLC for payment.

Ship to: PFF Solutia
Taylor Corporation
Pharmacia LLC/ Solutia Inc.
702 Clydesdale Avenue
Tyler Hollis @ 256–419–1082
Ellis Benett– 256–835–1800
Anniston, AL 36201

Roll Certifications included

Ship date: 09/15/2015
Branch plant: 1500
Sales order: SO–076558

Shipping instructions: Tentative ship date is 7/27/15. do not ship until release from Paul . Bennett 256–835–1800 **Shipment:** 24 hour pre call Ellis

Line no.	Shipped quantity	Product code	Unit	Kind of Package, Description of Articles, Special Marks and Exceptions		Weight
	173,250.00	HDT–040GE–BBB–B–W0	SF	GSE HD 2S Textured 040 mil GM13 22.5' W		
1				108183071	GSE HD 2S Textured 040 mil GM13 22.5' W	3,898.00
2				108183083	GSE HD 2S Textured 040 mil GM13 22.5' W	3,830.00
3				108183088	GSE HD 2S Textured 040 mil GM13 22.5' W	3,830.00
4				108183093	GSE HD 2S Textured 040 mil GM13 22.5' W	3,830.00
5				108183099	GSE HD 2S Textured 040 mil GM13 22.5' W	3,830.00
6				108183101	GSE HD 2S Textured 040 mil GM13 22.5' W	3,824.00
7				108183103	GSE HD 2S Textured 040 mil GM13 22.5' W	3,792.00
8				108183104	GSE HD 2S Textured 040 mil GM13 22.5' W	3,798.00
9				108183105	GSE HD 2S Textured 040 mil GM13 22.5' W	3,796.00
10				108183106	GSE HD 2S Textured 040 mil GM13 22.5' W	3,796.00
11				108183107	GSE HD 2S Textured 040 mil GM13 22.5' W	3,794.00
	1.00	FREIGHTSHT001	EA	DOM. SHIPPING CHARGE Estimated freight. Actual freight will be determined at time of shipment		
12				DOM. SHIPPING CHARGE Estimated freight. Actual freight will be determined at time of shipment		0.00

Note on List of Rolls

108183102 missing Roll

SEP 17 2015

Total quantity: 173,251.00 **Total weight:** 42,018.00

Freight charges are prepaid unless marked collect.

Check box if collect ☐

Customer PO number P15895

If this shipment is to be delivered to consignee, consignor shall sign the following statement.

Carrier may decline to deliver this shipment without payment of freight and all other lawful charges.

Signature of Consignor

Local Verification Signed X

PRO Number RR056151

Seal numbers

Truckers P.O. # PO1350

Driver requirements:

1) Driver must pre call 24 hrs prior to delivery and on Friday for Monday delivery.
2) Driver must call (281) 230–6781 when unloaded.
3) Driver must call and advise any delay in transit.
4) A copy of this bill of lading must accompany Freight Invoice.

Carrier name: RED WOOD

Carrier signature: x Guthrie Alden

Date: x 9/15/15

GSE Environmental, LLC

ROLL TEST DATA REPORT

GSE QC APPROVED

Report Date: Sep/15/2015

Sales Order No.	Customer Name	Project Location	Product Name	BOL Number
SO-076558	Plastic Fusion Fabricators, Inc.	Anniston AL US	HDT-040GE-BBB-B-W0	BL-0090851

Roll Number	Average Thickness ASTM D5994 (mils)	Minimum Thickness ASTM D5994 (mils)	Yield Strength ASTM D6693 (ppi) MD	Yield Strength ASTM D6693 (ppi) TD	Yield Elongation ASTM D6693 (%) MD	Yield Elongation ASTM D6693 (%) TD	Break Strength ASTM D6693 (ppi) MD	Break Strength ASTM D6693 (ppi) TD	Break Elongation ASTM D6693 (%) MD	Break Elongation ASTM D6693 (%) TD	Tear Resistance ASTM D1004 (lbs) MD	Tear Resistance ASTM D1004 (lbs) TD	Puncture Resistance ASTM D4833 (lbs)	Density ASTM D1505 (g/cc)	Carbon Black Content ASTM D4218 (%)	Carbon Black Dispersion ASTM D5596 (Views in Cat1-Cat2)	Asperity Height ASTM D7466 (mils) A Side	Asperity Height ASTM D7466 (mils) B Side
108183071	42	38	107	120	16	16	154	117	549	384	42	37	119	0.945	2.6	10	22	24
108183083	42	37	122	136	16	16	138	121	485	395	45	41	119	0.945	2.4	10	23	23
108183088	42	38	114	128	16	16	137	127	441	456	45	40	118	0.945	2.6	10	22	23
108183093	42	38	116	122	16	16	148	118	560	372	43	40	117	0.945	2.5	10	23	23
108183099	42	37	124	134	16	17	138	120	487	398	45	42	115	0.945	2.5	10	23	22
108183101	43	40	125	136	16	16	146	128	516	452	43	48	110	0.945	2.4	10	24	23
108183103	41	39	113	123	16	16	144	132	540	553	43	41	110	0.945	2.5	10	22	22
108183104	42	36	113	123	16	16	144	132	540	553	43	41	110	0.945	2.5	10	23	22
108183105	40	38	113	123	16	16	144	132	540	553	43	41	110	0.945	2.5	10	23	22
108183106	40	37	114	120	16	16	140	123	471	478	43	38	112	0.944	2.4	10	22	22
108183107	41	37	114	120	16	16	140	123	471	478	43	38	112	0.944	2.4	10	22	22

Laboratory Manager _____

This test report shall not be reproduced, except in full, without written approval of the laboratory.

GEOSYNTHETIC INVENTORY CONTROL LOG

PROJECT NUMBER: 130 2962CQA **PROJECT TITLE:** OU3 RA Construction
OWNER: Solutia
LOCATION: Anniston AL **CONTRACTOR:** Taylor

MATERIAL TYPE : (GEOMEMBRANE) GEONET GEOTEXTILE OTHER 4th truck
DATE OF ARRIVAL: 9/17/15 **DATE OF INVENTORY:** 9/17/15 @ 0710
MATERIAL MANUFACTURER: GSE **INVENTORY MONITOR:** SL
PRODUCT IDENTIFICATION: HOT-040GE-B15B-B-WD **CONDITION IN TRUCK:** Good
TRUCK TYPE: Flat Bed **UNLOADING METHOD:** Loader

	ROLL NUMBER	BATCH OR LOT NO.	MATERIAL DIMENSIONS LENGTH	WIDTH	THICKNESS OR WEIGHT	QC CERT Y/N	CONF. SAMP. Y/N	OTHER	REMARKS
1	108183088		700	22.5	40 mil	✓			Textured
2	108183105		700	22.5	40 mil	✓			↓
3	108183101		700	22.5	40 mil	✓			
4	108183103		700	22.5	40 mil	✓			
5	108183107		700	22.5	40 mil	✓			
6	108183071		700	22.5	40 mil	✓			
7	108183083		700	22.5	40 mil	✓			
8	108183099		700	22.5	40 mil	✓			
9	108183093		700	22.5	40 mil	✓			
10	108183104		700	22.5	40 mil	✓			
11	108183106		700	22.5	40 mil	✓			✓
12									
13									
14									
15									
16									
17									
18									
19									
20									
21									
22									
23									
24									
25									

GCS FORM: G2
(JUNE 1992)

REVIEWED BY: _____ DATE: _____

GOLDER ASSOCIATES

GSE Roll Allocation

Order SO-076558
Customer Plastic Fusion Fabricators, Inc.
Project Name PFF Solutia

Roll#	Resin Lot	Product Code	Mfg Date	Length
108183069	HFG820660	HDT-040GE-BBB-B-W0	7/26/2015	700
108183070	HFG820660	HDT-040GE-BBB-B-W0	7/26/2015	700
108183071	HFG820660	HDT-040GE-BBB-B-W0	7/26/2015	700
108183072	HFG820660	HDT-040GE-BBB-B-W0	7/27/2015	700
108183073	HFG820660	HDT-040GE-BBB-B-W0	7/27/2015	700
108183074	HFG820660	HDT-040GE-BBB-B-W0	7/27/2015	700
108183075	HFG820660	HDT-040GE-BBB-B-W0	7/27/2015	700
108183076	D150120040	HDT-040GE-BBB-B-W0	7/27/2015	700
108183077	D150120040	HDT-040GE-BBB-B-W0	7/27/2015	700
108183078	D150120040	HDT-040GE-BBB-B-W0	7/27/2015	700
108183079	D150120040	HDT-040GE-BBB-B-W0	7/27/2015	700
108183080	D150120040	HDT-040GE-BBB-B-W0	7/27/2015	700
108183081	D150120040	HDT-040GE-BBB-B-W0	7/27/2015	700
108183082	D150120040	HDT-040GE-BBB-B-W0	7/27/2015	700
108183083	D150120040	HDT-040GE-BBB-B-W0	7/27/2015	700
108183084	D150120040	HDT-040GE-BBB-B-W0	7/27/2015	700
108183085	D150120040	HDT-040GE-BBB-B-W0	7/27/2015	700
108183086	D150120040	HDT-040GE-BBB-B-W0	7/27/2015	700
108183087	D150120040	HDT-040GE-BBB-B-W0	7/27/2015	700
108183088	D150120040	HDT-040GE-BBB-B-W0	7/27/2015	700
108183089	D150120040	HDT-040GE-BBB-B-W0	7/27/2015	700
108183090	D150120040	HDT-040GE-BBB-B-W0	7/27/2015	700
108183091	D150120040	HDT-040GE-BBB-B-W0	7/28/2015	700
108183092	D150120040	HDT-040GE-BBB-B-W0	7/28/2015	700
108183093	D150120040	HDT-040GE-BBB-B-W0	7/28/2015	700
108183094	D150120040	HDT-040GE-BBB-B-W0	7/28/2015	700

GSE Roll Allocation

Order SO-076558
Customer Plastic Fusion Fabricators, Inc.
Project Name PFF Solutia

Roll#	Resin Lot	Product Code	Mfg Date	Length
108183095	D150520932	HDT-040GE-BBB-B-W0	7/28/2015	700
108183096	D150520932	HDT-040GE-BBB-B-W0	7/28/2015	700
108183097	D150520932	HDT-040GE-BBB-B-W0	7/28/2015	700
108183098	D150520932	HDT-040GE-BBB-B-W0	7/28/2015	700
108183099	D150520932	HDT-040GE-BBB-B-W0	7/28/2015	700
108183100	D150520932	HDT-040GE-BBB-B-W0	7/28/2015	700
108183101	D150520932	HDT-040GE-BBB-B-W0	7/28/2015	700
108183102	D150520932	HDT-040GE-BBB-B-W0	7/28/2015	700
108183103	D150520932	HDT-040GE-BBB-B-W0	7/28/2015	700
108183104	D150520932	HDT-040GE-BBB-B-W0	7/28/2015	700
108183105	D150520932	HDT-040GE-BBB-B-W0	7/28/2015	700
108183106	D150520932	HDT-040GE-BBB-B-W0	7/28/2015	700

APPENDIX F2

Conformance Testing

APPENDIX F2.1

Product Data Sheet

PRODUCT DATA SHEET

GSE HD Textured Geomembrane

GSE HD Textured is a co-extruded textured high density polyethylene (HDPE) geomembrane available on one or both sides. It is manufactured from the highest quality resin specifically formulated for flexible geomembranes. This product is used in applications that require increased frictional resistance, excellent chemical resistance and endurance properties.

AT THE CORE:
An HDPE geomembrane used in applications that require increased frictional resistance, excellent chemical resistance and endurance properties.

Product Specifications

These product specifications meet GRI GM13

Tested Property	Test Method	Frequency	Minimum Average Value				
			30 mil	40 mil	60 mil	80 mil	100 mil
Thickness, mil Lowest individual reading	ASTM D 5994	every roll	30 27	40 36	60 54	80 72	100 90
Density, g/cm³	ASTM D 1505	200,000 lb	0.940	0.940	0.940	0.940	0.940
Tensile Properties (each direction Strength at Break, lb/in-width Strength at Yield, lb/in-width Elongation at Break, % Elongation at Yield, %	ASTM D 6693, Type IV Dumbell, 2 ipm G.L. 2.0 in G.L. 1.3 in	20,000 lb	 45 63 100 12	 60 84 100 12	 90 126 100 12	 120 168 100 12	 150 210 100 12
Tear Resistance, lb	ASTM D 1004	45,000 lb	21	28	42	56	70
Puncture Resistance, lb	ASTM D 4833	45,000 lb	45	60	90	120	150
Carbon Black Content, % (Range)	ASTM D 1603*/4218	20,000 lb	2.0 - 3.0	2.0 - 3.0	2.0 - 3.0	2.0 - 3.0	2.0 - 3.0
Carbon Black Dispersion	ASTM D 5596	45,000 lb	Note(1)	Note(1)	Note(1)	Note(1)	Note(1)
Asperity Height, mil	ASTM D 7466	second roll	16	18	18	18	18
Notched Constant Tensile Load(2), hr	ASTM D 5397, Appendix	200,000 lb	500	500	500	500	500
Oxidative Induction Time, mins	ASTM D 3895, 200°C; O_2, 1 atm	200,000 lb	>100	>100	>100	>100	>100
TYPICAL ROLL DIMENSIONS							
Roll Length(3), ft	Double-Sided Textured Single-Sided Textured		830 1,010	700 780	520 540	400 410	330 330
Roll Width(3), ft			22.5	22.5	22.5	22.5	22.5
Roll Area, ft²	Double-Sided Textured Single-Sided Textured		18,675 22,725	15,750 17,550	11,700 12,150	9,000 9,225	7,425 7,425

NOTES:
- (1)Dispersion only applies to near spherical agglomerates. 9 of 10 views shall be Category 1 or 2. No more than 1 view from Category 3.
- (2)NCTL for GSE HD Textured is conducted on representative smooth membrane samples.
- (3)Roll lengths and widths have a tolerance of ±1%.
- GSE HD Textured is available in rolls weighing approximately 4,000 lb.
- All GSE geomembranes have dimensional stability of ±2% when tested according to ASTM D 1204 and LTB of <-77°C when tested according to ASTM D 746.
- *Modified.

GSE is a leading manufacturer and marketer of geosynthetic lining products and services. We've built a reputation of reliability through our dedication to providing consistency of product, price and protection to our global customers.

Our commitment to innovation, our focus on quality and our industry expertise allow us the flexibility to collaborate with our clients to develop a custom, purpose-fit solution.

GSE ENVIRONMENTAL™

DURABILITY RUNS DEEP

For more information on this product and others, please visit us at GSEworld.com, call 800.435.2008 or contact your local sales office.

This Information is provided for reference purposes only and is not intended as a warranty or guarantee. GSE assumes no liability in connection with the use of this Information. Specifications subject to change without notice. GSE and other trademarks in this document are registered trademarks of GSE lining Technology, LLC in the United States and certain foreign countries. REV 10DEC2014

APPENDIX F2.2

Quality Control Certificates

GSE Environmental, LLC

ROLL TEST DATA REPORT

GSE QC APPROVED

Report Date: Jul/28/2015

Sales Order No.	Customer Name	Project Location	Product Name	BOL Number
SO−076558	Plastic Fusion Fabricators, Inc.	Anniston AL US	HDT−040GE−BBB−B−W0	

Roll Number	Average Thickness ASTM D5994 (mils)	Minimum Thickness ASTM D5994 (mils)	Yield Strength ASTM D6693 (ppi) MD	Yield Strength ASTM D6693 (ppi) TD	Yield Elongation ASTM D6693 (%) MD	Yield Elongation ASTM D6693 (%) TD	Break Strength ASTM D6693 (ppi) MD	Break Strength ASTM D6693 (ppi) TD	Break Elongation ASTM D6693 (%) MD	Break Elongation ASTM D6693 (%) TD	Tear Resistance ASTM D1004 (lbs) MD	Tear Resistance ASTM D1004 (lbs) TD	Puncture Resistance ASTM D4833 (lbs)	Density ASTM D1505 (g/cc)	Carbon Black Content ASTM D4218 (%)	Carbon Black Dispersion ASTM D5596 (Views in Cat1−Cat2)	Asperity Height ASTM D7466 (mils) A Side	Asperity Height ASTM D7466 (mils) B Side
108183069	41	36	111	124	16	15	135	122	468	368	43	40	101	0.945	2.6	10	23	24
108183070	43	39	107	120	16	16	154	117	549	384	42	37	119	0.945	2.6	10	22	24
108183071	42	38	107	120	16	16	154	117	549	384	42	37	119	0.945	2.6	10	22	24
108183072	42	40	107	120	16	16	154	117	549	384	42	37	119	0.945	2.6	10	22	23
108183073	42	39	117	124	16	16	132	128	331	422	42	40	115	0.945	2.4	10	22	23
108183074	42	39	117	124	16	16	132	128	331	422	42	40	115	0.945	2.4	10	23	23
108183075	43	36	117	124	16	16	132	128	331	422	42	40	115	0.945	2.4	10	23	23
108183076	41	37	118	128	16	16	144	121	503	454	43	42	117	0.945	2.4	10	24	24
108183077	40	38	118	128	16	16	144	121	503	454	43	42	117	0.945	2.4	10	24	24
108183078	41	36	118	128	16	16	144	121	503	454	43	42	117	0.945	2.4	10	24	24
108183079	42	36	123	128	16	16	151	123	520	373	47	43	119	0.945	2.4	10	24	24
108183080	41	37	123	128	16	16	151	123	520	373	47	43	119	0.945	2.4	10	23	23
108183081	42	37	123	128	16	16	151	123	520	373	47	43	119	0.945	2.4	10	23	23
108183082	42	37	122	136	16	16	138	121	485	395	45	41	119	0.945	2.4	10	23	23
108183083	42	37	122	136	16	16	138	121	485	395	45	41	119	0.945	2.4	10	23	23
108183084	42	37	122	136	16	16	138	121	485	395	45	41	119	0.945	2.4	10	32	24
108183085	41	36	113	125	16	16	128	114	408	325	42	40	114	0.945	2.4	10	32	24
108183086	42	37	113	125	16	16	128	114	408	325	42	40	114	0.945	2.4	10	22	23
108183087	42	39	113	125	16	16	128	114	408	325	42	40	114	0.945	2.4	10	22	23
108183088	42	38	114	128	16	16	137	127	441	456	45	40	118	0.945	2.6	10	22	23
108183089	42	39	114	128	16	16	137	127	441	456	45	40	118	0.945	2.6	10	22	23
108183090	41	38	114	128	16	16	137	127	441	456	45	40	118	0.945	2.6	10	23	24
108183091	41	39	116	122	16	16	148	118	560	372	43	40	117	0.945	2.5	10	23	24
108183092	42	38	116	122	16	16	148	118	560	372	43	40	117	0.945	2.5	10	23	23
108183093	42	38	116	122	16	16	148	118	560	372	43	40	117	0.945	2.5	10	23	23
108183094	42	38	126	136	16	15	148	128	513	436	47	43	115	0.945	2.4	10	22	23

Laboratory Manager

This test report shall not be reproduced, except in full, without written approval of the laboratory.

GSE Environmental, LLC

ROLL TEST DATA REPORT

GSE QC APPROVED

Report Date: Jul/29/2015

Sales Order No.	Customer Name	Project Location	Product Name	BOL Number
SO−076558	Plastic Fusion Fabricators, Inc.	Anniston AL US	HDT−040GE−BBB−B−W0	

Roll Number	Average Thickness ASTM D5994 (mils)	Minimum Thickness ASTM D5994 (mils)	Yield Strength ASTM D6693 (ppi) MD	Yield Strength ASTM D6693 (ppi) TD	Yield Elongation ASTM D6693 (%) MD	Yield Elongation ASTM D6693 (%) TD	Break Strength ASTM D6693 (ppi) MD	Break Strength ASTM D6693 (ppi) TD	Break Elongation ASTM D6693 (%) MD	Break Elongation ASTM D6693 (%) TD	Tear Resistance ASTM D1004 (lbs) MD	Tear Resistance ASTM D1004 (lbs) TD	Puncture Resistance ASTM D4833 (lbs)	Density ASTM D1505 (g/cc)	Carbon Black Content ASTM D4218 (%)	Carbon Black Dispersion ASTM D5596 (Views in Cat1−Cat2)	Asperity Height ASTM D7466 (mils) A Side	Asperity Height ASTM D7466 (mils) B Side
108183095	41	37	126	136	16	15	148	128	513	436	47	43	115	0.945	2.4	10	22	23
108183096	43	39	126	136	16	15	148	128	513	436	47	43	115	0.945	2.4	10	23	22
108183097	42	38	124	134	16	17	138	120	487	398	45	42	115	0.945	2.5	10	23	22
108183098	42	37	124	134	16	17	138	120	487	398	45	42	115	0.945	2.5	10	23	22
108183099	42	37	124	134	16	17	138	120	487	398	45	42	115	0.945	2.5	10	23	22
108183100	42	38	125	136	16	16	146	128	516	452	43	48	110	0.945	2.4	10	24	23
108183101	43	40	125	136	16	16	146	128	516	452	43	48	110	0.945	2.4	10	24	23
108183102	41	38	125	136	16	16	146	128	516	452	43	48	110	0.945	2.4	10	22	22
108183103	41	39	113	123	16	16	144	132	540	553	43	41	110	0.945	2.5	10	22	22
108183104	42	36	113	123	16	16	144	132	540	553	43	41	110	0.945	2.5	10	23	22
108183105	40	38	113	123	16	16	144	132	540	553	43	41	110	0.945	2.5	10	23	22
108183106	40	37	114	120	16	16	140	123	471	478	43	38	112	0.944	2.4	10	22	22

Laboratory Manager _____

This test report shall not be reproduced, except in full, without written approval of the laboratory.

Total Petrochemicals & Refining USA, Inc.
Bayport Polyethylene Plant
Bayport, TX 77555
U.S.A.

GSE / Attn: Sue P.
fax#281-230-8630
PALESTINE TX

SHIPPED TO:
GSE LINING TECHNOLOGY, LLC.
UP Track 14732 Westfield
WESTFIELD TX 77090

Quality certificate

Date
05/29/2015
Purchase order item/date
03-501864
Delivery item/date
85609813 000001 / 05/29/2015
Order item
32223029 000001
Customer number
80131640

Material: Our / Your reference
MDPE 37120 (441840) /

Please find below test data and pertinent information on TOTAL PETROCHEMICALS & REFINING USA, INC. Polyethylene material shipped to your plant.

Batch D150120040 **Quantity** 198,000 LB **Railcar** FINX010633

Characteristic	Unit	Value
Density	g/cc	0.938
Melt Index 21.6/190	g/10 min	12.8
Railcar Prefix	-	FINX
Railcar Number	-	010633

Sincerely,

Charles R. St. Ama
Quality Control Laboratory Supervisor
12212 Port Road, Pasadena, Texas 77507
P.O. Box 5010, LaPorte, Texas 77572-5010

Questions? Contact Customer Service at 1-800-344-3462

CoA Date: 07/16/2015

Certificate of Analysis

Shipped To: GSE ENVIRONMENTAL, LLC
19103 GUNDLE ROAD
HOUSTON TX 77073
USA

Recipient: Phouangsavanh
Fax:

Delivery #: 89091205
PO #: 03-503474
Weight: 186600 LB
Ship Date: 07/16/2015
Package: BULK
Mode: Hopper Car
Car #: CHVX896826
Seal No: 33595

Product:
MARLEX POLYETHYLENE K306 BULK

Lot Number: HFG820660

Property	Test Method	Value	Unit
Melt Index	ASTM D1238	0.1	g/10mi
HLMI Flow Rate	ASTM D1238	9.8	g/10mi
Density	D1505 or D4883	0.937	g/cm3
Production Date		07/12/2015	

The data set forth herein have been carefully compiled by Chevron Phillips Chemical Company LP (CPChem).
However, there is no warranty of any kind, either expressed or implied, applicable to its use, and the user assumes all risk and liability in connection therewith.

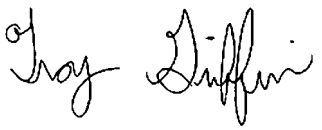

Troy Griffin
Quality Systems Coordinator

For CoA questions contact Customer Service Representative at 800-231-1212

Total Petrochemicals & Refining USA, Inc.
Bayport Polyethylene Plant
Bayport, TX 77555
U.S.A.

GSE / Attn: Sue P.
fax#281-230-8630
PALESTINE TX

SHIPPED TO:
GSE LINING TECHNOLOGY, LLC.
UP Track 14732 Westfield
WESTFIELD TX 77090

Quality certificate

Date
06/24/2015
Purchase order item/date
03-501864
Delivery item/date
85633921 000001 / 06/24/2015
Order item
32223036 000001
Customer number
80131640

Material: Our / Your reference
MDPE 37120 (441840) /

Please find below test data and pertinent information on TOTAL PETROCHEMICALS & REFINING USA, INC. Polyethylene material shipped to your plant.

Batch D150520932 **Quantity** 188,600 LB **Railcar** UTCX001873

Characteristic	Unit	Value
Density	g/cc	0.938
Melt Index 21.6/190	g/10 min	10.9
Railcar Prefix	-	UTCX
Railcar Number	-	001873

Sincerely,

Charles R. St. Ama
Quality Control Laboratory Supervisor
12212 Port Road, Pasadena, Texas 77507
P.O. Box 5010, LaPorte, Texas 77572-5010

Questions? Contact Customer Service at 1-800-344-3462

Report Date
7/28/2015

Quality Assurance Laboratory Test Results

Job Name: PFF Solutia
Sales Order: 76558

Required Testing: ASTM D 3895 -- Standard Test Method for Oxidative Induction Time of Polyolefins by Differential Scanning Calorimetry
ASTM D 5397 -- Standard Test Method for Evaluation of Stress Crack Resistance of Polyolefin Geomembranes Using Notched Constant Tensile Load Test

Specification: D 3895 - > 100 Minutes
D 5397 - > 300 Hours

Product Code	Resin Lot Number	Test Results
HDT-040GE-BBB-B-W0	HFG820660	PASS
HDT-040GE-BBB-B-W0	D150120040	PASS

Approved By:	Debra Gortemiller
Date Approved:	July 28, 2015

The above stated data shall not be reproduced except in full, without the written approval of the laboratory.

Report Date
7/28/2015

Quality Assurance Laboratory Test Results

Job Name: PFF Solutia
SO Number: 76558

The table below summarizes additive performance of GSE Houston products as perceived by OIT retention after UV and Oven Aging per GRI Test Method GM13:

		Oven Aging @ 85° C (ASTM D 5721)				UV Resistance per GRI GM11			
		90 days per ASTM D 5885				1600 hours UV Aging per ASTM D 5885			
Product Type	**Formulation**	Initial HP OIT (min)	Final HP OIT (min)	Retained (%)	GRI Criteria (%)	Initial HP OIT (min)	Final HP OIT (min)	Retained (%)	GRI Criteria (%)
HDPE Geomembrane	Chevron Phillips Marlex® K306 + Carbon Black	697	661	94	80	697	565	81	50

Approved By: Debra Gortemiller
Date: July 28, 2015

The above stated data shall not be reproduced except in full, without the written approval of the laboratory.

Report Date
7/28/2015

Quality Assurance Laboratory Test Results

Job Name: PFF Solutia
SO Number: 76558

The table below summarizes additive performance of GSE Houston products as perceived by OIT retention after UV and Oven Aging per GRI Test Method GM13:

		Oven Aging @ 85° C (ASTM D 5721)				UV Resistance per GRI GM11			
		90 days per ASTM D 5885				1600 hours UV Aging per ASTM D 5885			
Product Type	**Formulation**	Initial HP OIT (min)	Final HP OIT (min)	Retained (%)	GRI Criteria (%)	Initial HP OIT (min)	Final HP OIT (min)	Retained (%)	GRI Criteria (%)
HDPE Geomembrane	Equistar Petrothene LT371644X02	972	812	83	80	972	815	83	50

Approved By: Debra Gortemiller
Date: July 28, 2015

The above stated data shall not be reproduced except in full, without the written approval of the laboratory.

Report Date
7/29/2015

Quality Assurance Laboratory Test Results

Job Name: PFF Solutia
Sales Order: 76558

Required Testing: ASTM D 3895 -- Standard Test Method for Oxidative Induction Time of Polyolefins by Differential Scanning Calorimetry
ASTM D 5397 -- Standard Test Method for Evaluation of Stress Crack Resistance of Polyolefin Geomembranes Using Notched Constant Tensile Load Test

Specification: D 3895 - > 100 Minutes
D 5397 - > 300 Hours

Product Code	Resin Lot Number	Test Results
HDT-040GE-BBB-B-W0	HFG820660	PASS
HDT-040GE-BBB-B-W0	D150120040	PASS
HDT-040GE-BBB-B-W0	D150520932	PASS

Approved By:	Debra Gortemiller
Date Approved:	July 29, 2015

The above stated data shall not be reproduced except in full, without the written approval of the laboratory.

APPENDIX F2.3

Quality Assurance Test Results

SUMMARY OF TEXTURED GEOMEMBRANE CONFORMANCE TEST RESULTS

SOLUTIA
ONSITE OU-3 RA CONSTRUCTION
ALABAMA

ROLL DESIGNATION	Reference Value	10818-3069	10818-3074	10818-3080	10818-3086	10818-3092	10818-3098	10818-3104	-	-	-
THICKNESS (mils) ASTM D5994	>=38	42	41	41	42	42	41	42	-	-	-
PUNCTURE STRENGTH (lbs) ASTM D4833	>=60	116.0	118.8	113.6	110.4	113.5	113.1	113.3	-	-	-
CARBON BLACK DISPERSION (category)	1 or 2	1	1	1	1	1	2	2	-	-	-
(µm) ASTM D5596	-	23	34	23	26	29	33	44	-	-	-
DENSITY (g/cc) ASTM D792	>= 0.940	0.948	0.946	0.946	0.948	0.947	0.946	0.947	-	-	-
CARBON BLACK CONTENT (%) ASTM D1603	2.0 - 3.0	2.3	2.2	2.2	2.3	2.3	2.3	2.2	-	-	-
STRENGTH AT YIELD (ppi)	>=84	124	122	131	128	129	128	127	-	-	-
MD/TD (1) ASTM D6693	>=84	132	128	138	134	135	138	137	-	-	-
STRENGTH AT BREAK (ppi)	>=60	140	150	129	155	134	163	141	-	-	-
MD/TD (1) ASTM D6693	>=60	110	114	105	109	108	125	106	-	-	-
ELONGATION AT YIELD (%)	>=12	15	14	14	14	15	15	14	-	-	-
MD/TD (1) ASTM D6693	>=12	12	12	14	11	12	13	12	-	-	-
ELONGATION AT BREAK (%)	>=100	425	474	327	506	400	509	426	-	-	-
MD/TD (1) ASTM D6693	>=100	275	300	206	369	277	345	288	-	-	-

(1) MD/TD corresponds to Machine Direction / Transverse Direction.

August 2015

1302962-CQA

SUMMARY OF TEXTURED GEOMEMBRANE CONFORMANCE TEST RESULTS

SOLUTIA
ONSITE OU-3 RA CONSTRUCTION
ALABAMA

ROLL DESIGNATION	Reference Value	10818-3069	10818-3074	10818-3080	10818-3086	10818-3092	10818-3098	10818-3104	-	-	-
THICKNESS (mils) ASTM D5994	>=38	42	41	41	42	42	41	42	-	-	-
PUNCTURE STRENGTH (lbs) ASTM D4833	>=60	116.0	118.8	113.6	110.4	113.5	113.1	113.3	-	-	-
CARBON BLACK DISPERSION (category)	1 or 2	1	1	1	1	1	2	2	-	-	-
(µm) ASTM D5596	-	23	34	23	26	29	33	44	-	-	-
DENSITY (g/cc) ASTM D792	>= 0.940	0.948	0.946	0.946	0.948	0.947	0.946	0.947	-	-	-
CARBON BLACK CONTENT (%) ASTM D1603	2.0 - 3.0	2.28	2.20	2.16	2.32	2.29	2.27	2.20	-	-	-
STRENGTH AT YIELD (ppi)	>=84	123.6	122.0	131.2	127.7	129.1	127.6	126.7	-	-	-
MD/TD (1) ASTM D6693	>=84	132.4	128.4	137.9	134.2	134.8	138.2	137.3	-	-	-
STRENGTH AT BREAK (ppi)	>=60	139.5	150.1	129.1	154.7	133.6	162.7	141.1	-	-	-
MD/TD (1) ASTM D6693	>=60	109.8	114.3	104.7	108.7	107.9	125.0	105.5	-	-	-
ELONGATION AT YIELD (%)	>=12	15	14	14	14	15	15	14	-	-	-
MD/TD (1) ASTM D6693	>=12	12	12	14	13	12	13	12	-	-	-
ELONGATION AT BREAK (%)	>=100	425	474	327	506	400	509	426	-	-	-
MD/TD (1) ASTM D6693	>=100	275	300	206	369	277	345	288	-	-	-

(1) MD/TD corresponds to Machine Direction / Transverse Direction.

APPENDIX F2.4

Interface Shear Test Results

Golder Associates	**SUBJECT:**	Interface Shear Strength for OU-3 RA Project	
	Job No.:	1302962CQA	**Prepared:** SM
	Ref.:	Solutia / OU-3 Remedial Action / AL	**Checked:** TPC
	Date:	Aug-24-2015	

Objective:

Evaluate the laboratory strength parameters for the interface shear strength testing completed for the OU-3 Remedial Action project.

Material Properties:

The components within the analysis cross sections are:

1 Topsoil
2 Cover Soils (from on-site borrow source)
3 Geocomposite drainage layer (double sided)
4 40 mil Textured HDPE Liner
5 Compacted subgrade layer (from on-site borrow source_

Interface Shear Testing Results

Interface shear tests were performed on the proposed liner system for the OU-3 Remedial Action project. The shear tests were run using cover soil compacted to 90% of the maximum dry density underlain by a geocomposite drainage layer, HDPE textured geomembrane, and subgrade soil compacted to 95% of the maximum dry density. Conservatively, the average of the peak and residual values was selected.

Test	Peak Strength		Residual Strength		Design Strength		Basis
	ϕ' (Deg)	c' (psi)	ϕ' (Deg)	c' (psi)	ϕ' (Deg)	c' (psi)	
Test #1	32.6	0.2	24.1	0.4	28.4	0.3	Avg. of peak/residual
Test #2	21.8	1.0	14.4	1.1	18.1	1.1	Avg. of peak/residual

Resulting Shear Stresses (psi) for Each Test

$(\tau_f'$ psi) = c' + σ'_v * tan (ϕ')

σ'_v (psi)	Test #1	Test #2	Reference (15 deg)
0	0.3	1.1	0.0
1	0.8	1.4	0.3
5	3.0	2.7	1.3
10	5.7	4.3	2.7

The average of the peak/residual values provide shear stresses at the corresponding normal stresses that all exceed the values required from the specifications (15 degrees).

SUMMARY OF DIRECT SHEAR TEST RESULTS

SOLUTIA
ONSITE OU-3 RA CONSTRUCTION
ALABAMA

SAMPLE DESIGNATION	Reference Value	DShr 1	DShr 2	-	-	-	-	-	-	-
DIRECT SHEAR										
Friction Angle (^{o})										
Peak	>=15	32.6	21.8	-	-	-	-	-	-	-
Residual @ 2 in	-	24.1	14.4	-	-	-	-	-	-	-
Adhesion (psi)										
Peak	-	0.2	1.0	-	-	-	-	-	-	-
Residual @ 2 in	-	0.4	1.1	-	-	-	-	-	-	-
ASTM D5321										

NOTE: The test results relate only to the samples and laboratory conditions tested. GAI neither accepts responsibility for nor makes claim as to the final use and purpose of the material.

AUGUST 2015 1302962-CQA

DIRECT SHEAR TEST RESULTS

ASTM D5321

PROJECT NAME: SOLUTIA/ONSITE OU-3 RA CONSTRUCTION/AL
SAMPLE NUMBER: DShr-1

INTERFACE TESTED: **TOP BOX** - COVER SOIL (7/22/2015 CMT Borrow)
SKAPS TN-240-2-8 GEOCOMPOSITE (floating)
GSE 60 mil TEXTURED HDPE GEOMEMBRANE (Roll #108183098)(floating)
BOTTOM BOX - SUBGRADE SOIL (7/22/2015 CMT Borrow)

SOIL CONDITIONS: **COVER SOIL** - REMOLDED TO 90% OF THE MAX DRY DENSITY OF 110.8 pcf AT A MOISTURE OF 16.8 +/- 0.5%
SUBGRADE SOIL - REMOLDED TO 95% OF THE MAX DRY DENSITY OF 110.8 pcf AT A MOISTURE OF 16.8 +/- 0.5%

TEST CONDITIONS: INTERFACES WETTED, CONSOLIDATED 8 hours AT NORMAL LOAD

SHEAR RATE: 0.004 in/min

SUBSTRATE: TEXTURED RIGID PLATES

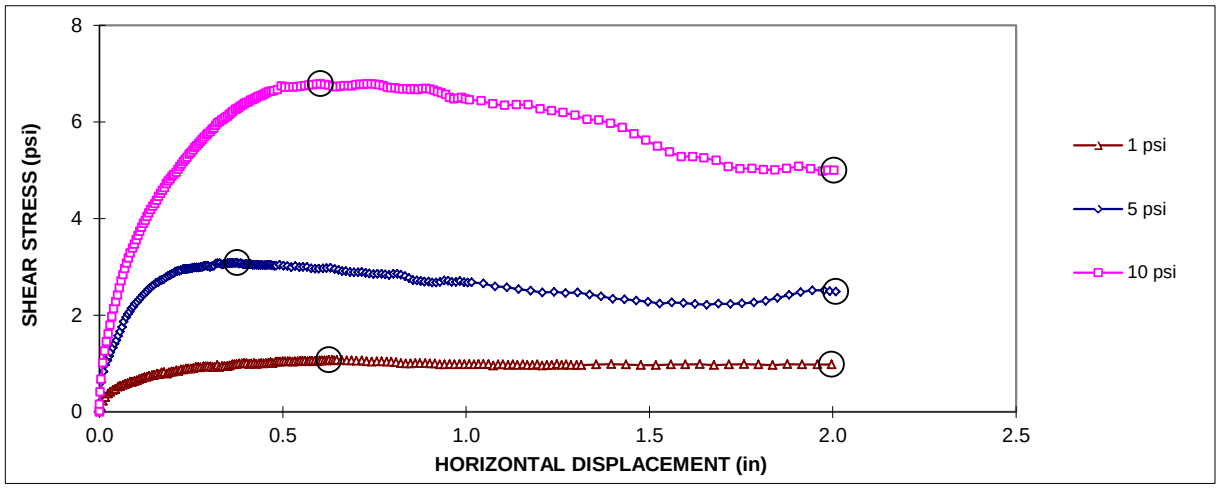

Normal Stress (psi)	Shear Stress Peak[1] (psi)	Shear Stress Residual (psi)	Peak Friction Angle	Peak Adhesion[2] (psi)	Residual Friction Angle	Residual Adhesion[2] (psi)
1	1.1	1.0				
5	3.1	2.5	32.6	0.2	24.1	0.4
10	6.8	5.0				

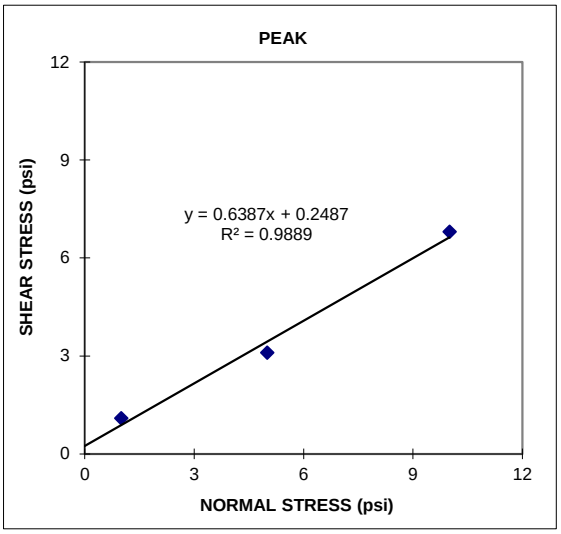

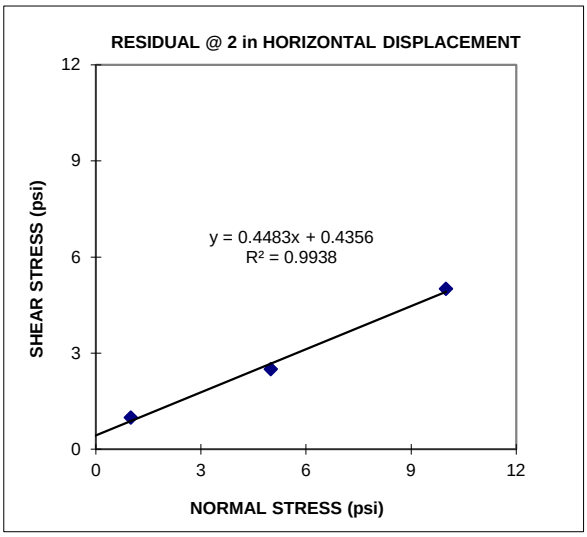

Observations After Test

1 psi: Shearing occurred between the Geocomposite and the Cover Soil
5 psi: Shearing occurred between the Geocomposite and the Geomembrane
10 psi: Shearing occurred between the Geocomposite and the Geomembrane

(1) The peak shear stresses for 1, 5 and 10 psi normal stresses were chosen at 0.626, 0.375 and 0.603 inch horizontal displacements, respectively.

(2) The adhesion value is based on the "best-fit" line which may not show true adhesion.

AUGUST 2015 1302962-CQA

DIRECT SHEAR TEST RESULTS

ASTM D5321

PROJECT NAME: SOLUTIA/ONSITE OU-3 RA CONSTRUCTION/AL
SAMPLE NUMBER: DShr-2

INTERFACE TESTED: **TOP BOX** - COVER SOIL (7/22/2015 CMT Borrow)
SKAPS TN-240-2-8 GEOCOMPOSITE (floating)
GSE 60 mil TEXTURED HDPE GEOMEMBRANE (Roll #108183098)(floating)
BOTTOM BOX - SUBGRADE SOIL (7/22/2015 CMT Borrow)

SOIL CONDITIONS: **COVER SOIL** - REMOLDED TO 90% OF THE MAX DRY DENSITY OF 110.8 pcf AT A MOISTURE OF 16.8 +/- 0.5%
SUBGRADE SOIL - REMOLDED TO 95% OF THE MAX DRY DENSITY OF 110.8 pcf AT A MOISTURE OF 16.8 +/- 0.5%

TEST CONDITIONS: INTERFACES WETTED, CONSOLIDATED 8 hours AT NORMAL LOAD

SHEAR RATE: 0.004 in/min

SUBSTRATE: TEXTURED RIGID PLATES

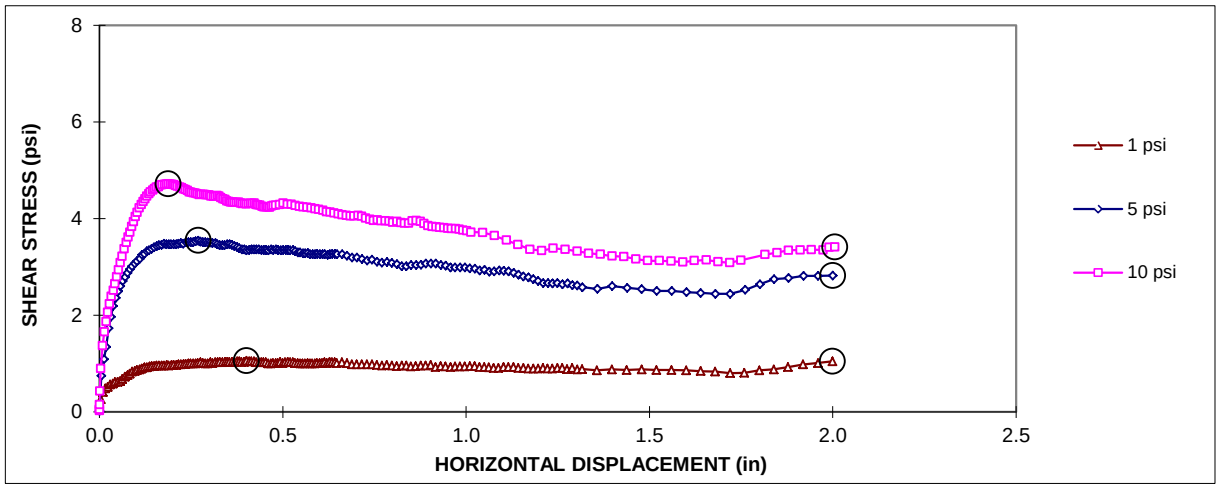

Normal Stress (psi)	Shear Stress Peak[1] (psi)	Shear Stress Residual (psi)	Peak Friction Angle	Peak Adhesion[2] (psi)	Residual Friction Angle	Residual Adhesion[2] (psi)
1	1.1	1.0				
5	3.5	2.8	21.8	1.0	14.4	1.1
10	4.7	3.4				

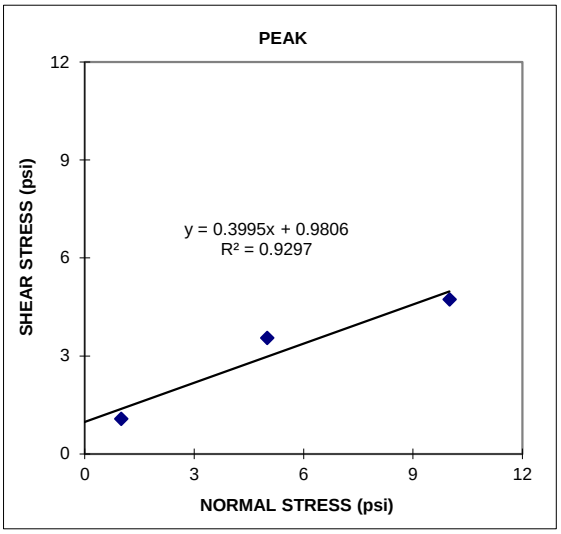

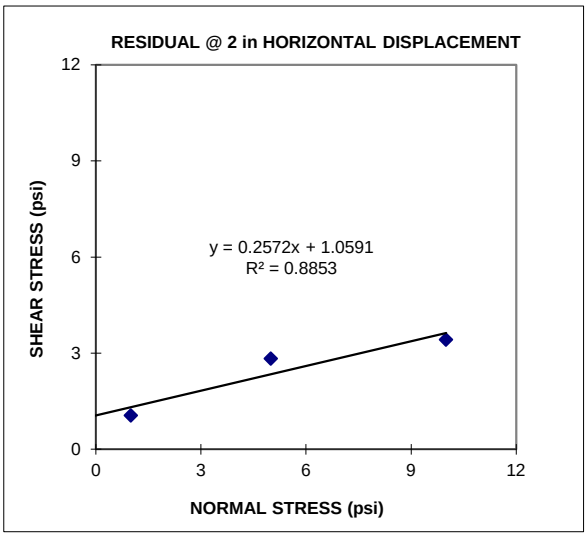

Observations After Test

1 psi: Shearing occurred between the Geocomposite and the Cover Soil
5 psi: Shearing occurred between the Geocomposite and the Geomembrane
10 psi: Shearing occurred between the Geocomposite and the Geomembrane

(1) The peak shear stresses for 1, 5 and 10 psi normal stresses were chosen at 0.401, 0.269 and 0.187 inch horizontal displacements, respectively.

(2) The adhesion value is based on the "best-fit" line which may not show true adhesion.

APPENDIX G

GEOCOMPOSITE MATERIAL INVENTORY AND CONFORMANCE TESTING

APPENDIX G1

Material Inventory

STRAIGHT BILL OF LADING ORIGINAL-NOT NEGOTIABLE

SKAPS Industries
571 Industrial Parkway
Commerce, GA 30529
Ph: 7060-336-7000 Fax: 706-336-7007

Bill of Lading #: C00009023
Ship Date: 10/28/15
Sales Order #: C002137
Customer Name: Plastic Fusion Fabricators, Inc.
Cust. P.O. #: P15896
Ship Via: Flatbed
Delivery Terms: Plant / PPA
Container #:
Seal #:

SHIP-TO:
Project: Solutia LF Closure, AL
Address: 702 Clydesdale Avenue
City, State, Zip: Anniston, AL, 36201
Contact: Randy/Ellis Bennett
Phone: 256.419.1199/256-835-1800

SIGN HERE FOR SHIPPER: [signature] 10/28/15

SHIPPER ADDRESS: 571 INDUSTRIAL PKWY.
COMMERCE, GA 30529

Product Code: TN240-2-8

No	Roll #	Sq. Ft.
1	0066381010158	3,335.00
2	0066381010161	3,335.00
3	0066381010162	3,335.00
4	0066381010163	3,335.00
5	0066381010164	3,335.00
6	0066381010165	3,335.00
7	0066381010166	3,335.00
8	0066381010167	3,335.00
9	0066381010168	3,335.00
10	0066381010169	3,335.00
11	0066381010170	3,335.00
12	0066381010171	3,335.00
13	0066381010172	3,335.00
14	0066381010173	3,335.00
15	0066381010174	3,335.00
16	0066381010175	3,335.00
17	0066381010176	3,335.00
18	0066381010177	3,335.00

Total Rolls: 18
Total Sq Feet: 60,030.00
Total Weight (lbs): 17,212.00

Bags of Ties: 1

Driver sign below if you have received above mentioned items

Driver's Sign: [signature]

ATTN RECEIVER: Please sign below if you have received the items mentioned on the BOL and any discrepencies must be reported to SKAPS Industries within 7 days of receipt of goods.

Receiver Print Name _____ Receiver's Signature _____

Receive Date _____ Receiver's Company Name _____

Driver Requirements:

1) For Monday delivery driver must call on Friday.
2) Driver must call 706-336-7000 when unloaded.
3) Driver must call and advise of any delay in transit.
4) A copy of this bill-of-lading must accompany freight invoice, failure to do this will result in delayed payments.

Delivery Timings: Mon-Fri 7am-4pm
Driver's Name: Kevin Williams
Driver's Sign: [signature]
Driver's Cell Phone #: 205 353 7767
Trucking Co.: KLF
Trucking Co. Phone #: 205 466 3420
Broker: TQL
Date: 10/28/15
Truck Departure Time:

Comments:

Driver please call 24 hours prior to delivery
Freight view shipper # : 5955601
Note : 18 Timbers Provided

Missing Rolls 1786179

18
24
42

CARRIER MUST COLLECT THE FREIGHT FROM THE BROKER ONLY

Received at Commerce, GA from SKAPS Industries the property described above, in apparent good order except as noted (contents and condition of packages unknown), marked, consigned, and destined as indicated above, which said Carrier (the word "Carrier" being understood throughout this Shipping Order as meaning the person or corporation in possession of the property) agrees to carry to the place of delivery at said destination. It is mutually agreed as to each Carrier of all or any of said property, over all or any portion of said route to destination and as to each party at any time interested in all or any of said property, that every service performed here under shall be subject to either: (a) if the shipper noted herein is SKAPS Industries as indicated by the designation of the "Shipper" to be SKAPS Industries, then the Shipper and Carrier are subject to the terms and conditions contained in the Contract for truck Transportation existing between the parties or (b) if the Shipper noted herein is not SKAPS Industries then SKAPS Industries is acting solely as the agent for the denoted Shipper, and thus every aspect of the service to be perform here under between the Shipper and the Carrier shall be subject to all the terms and conditions of the Uniform Domestic Straight Bill of Lading set forth (1) in Official Southern, Western, and Illinois Freight Classifications in effect on the date hereof, if this a rail-water shipment, or (2) in the applicable motor carrier classification or tariff if this is a motor carrier shipment. When acting in the capacity of an agent for a Shipper in placing the material in transit on behalf of a Shipper, SKAPS Industries accepts no liability for loss of cargo, damage to containers, or any other consequences occurring during transportation. Carrier having agreed that the transportation arrangement was initiated by the Shipper and not by SKAPS Industries Subject to the above terms and conditions as to which party is the Shipper, Shipper hereby certifies that he is familiar with the terms and conditions that govern the transportation of this shipment, and the said terms and conditions are hereby agreed and accepted for himself and his assigns.

COMShippingDefinitive.rpt

GEOSYNTHETIC INVENTORY CONTROL LOG

PROJECT NUMBER: 130 2962CQA
PROJECT TITLE: OU3 RA Construction
OWNER: Solutia
LOCATION: Anniston AL
CONTRACTOR: Taylor

MATERIAL TYPE : GEOMEMBRANE GEONET GEOTEXTILE (OTHER)
DATE OF ARRIVAL: 10/28/15
MATERIAL MANUFACTURER: SKAPS
PRODUCT IDENTIFICATION: TN240-2-8
TRUCK TYPE: 15 Lb 6x4

Shawn Calley
DATE OF INVENTORY: 10/28/15
INVENTORY MONITOR: SL
CONDITION IN TRUCK: Good
UNLOADING METHOD: Loader

	ROLL NUMBER	BATCH OR LOT NO.	MATERIAL DIMENSIONS LENGTH	WIDTH	THICKNESS OR WEIGHT	QC CERT Y/N	CONF. SAMP. Y/N	OTHER	REMARKS
1	0168		230	14.5	966				
2	0162		230	14.5	960				
3	0176		230	14.5	960				
4	0173		230	14.5	965				
5	0161		230	14.5	962				
6	0167		230	14.5	958				
7	0171		230	14.5	963				
8	0158		230	14.5	960				
9	0163		230	14.5	956				
10	0170		230	14.5	960	✓			
11	0174		230	14.5	956				
12	0166		230	14.5	959				
13	0164		230	14.5	960				
14	0177		230	14.5	964				
15	0169		230	14.5	962				
16	0175		230	14.5	964				
17	0165		230	14.5	965				
18	0172		230	14.5	956				
19									
20									
21									
22									
23									
24									
25									

GCS FORM: G2
(JUNE 1992)

REVIEWED BY: _____ DATE: _____

GOLDER ASSOCIATES

STRAIGHT BILL OF LADING ORIGINAL-NOT NEGOTIABLE

SKAPS Industries
571 Industrial Parkway
Commerce, GA 30529
Ph: 7060-336-7000 Fax: 706-336-7007

Bill of Lading #: C00009016
Ship Date: 10/28/15
Sales Order #: C002137
Customer Name: Plastic Fusion Fabricators, Inc.
Cust. P.O. #: P15896
Ship Via: Flatbed
Delivery Terms: Plant / PPA
Container #:
Seal #:

SHIP-TO:
Project: Solutia LF Closure, AL
Address: 702 Clydesdale Avenue
City, State, Zip: Anniston, AL, 36201
Contact: Randy/Ellis Bennett
Phone: 256.419.1199/256-835-1800

SIGN HERE FOR SHIPPER: _____

SHIPPER ADDRESS: 571 INDUSTRIAL PKWY.
COMMERCE, GA 30529

Product Code: TN240-2-8

No	Roll #	Sq. Ft.
1	0066381010136	3,335.00
2	0066381010137	3,335.00
3	0066381010138	3,335.00
4	0066381010139	3,335.00
5	0066381010140	3,335.00
6	0066381010141	3,335.00
7	0066381010142	3,335.00
8	0066381010143	3,335.00
9	0066381010144	3,335.00
10	0066381010145	3,335.00
11	0066381010146	3,335.00
12	0066381010147	3,335.00
13	0066381010148	3,335.00
14	0066381010149	3,335.00
15	0066381010150	3,335.00
16	0066381010151	3,335.00
17	0066381010152	3,335.00
18	0066381010153	3,335.00
19	0066381010154	3,335.00
20	0066381010155	3,335.00
21	0066381010156	3,335.00
22	0066381010157	3,335.00
23	0066381010159	3,335.00
24	0066381010160	3,335.00

Total Rolls: 24
Total Sq Feet: 80,040.00
Total Weight (lbs): 23,096.00

Bags of Ties: 2

Driver sign below if you have received above mentioned items
Driver's Sign: _____

ATTN RECEIVER: Please sign below if you have received the items mentioned on the BOL and any discrepencies must be reported to SKAPS Industries within 7 days of receipt of goods.

Receiver Print Name	Receiver's Signature
Receive Date	Receiver's Company Name

Driver Requirements:
1) For Monday delivery driver must call on Friday.
2) Driver must call 706-336-7000 when unloaded.
3) Driver must call and advise of any delay in transit.
4) A copy of this bill-of-lading must accompany freight invoice, failure to do this will result in delayed payments.

Delivery Timings: Mon-Fri 7am-4pm
Driver's Name: [illegible]
Driver's Sign: [illegible]
Driver's Cell Phone #: 704-662-9254
Trucking Co.: [illegible]
Trucking Co. Phone #: [illegible]
Broker: TQL
Date: 10/28/15
Truck Departure Time: _____

015 & not on truck

Comments:
Driver please call 24 hours prior to delivery
Freight view shipper # : 5955585
Note : 27 Timbers Provided

CARRIER MUST COLLECT THE FREIGHT FROM THE BROKER ONLY

Received at Commerce, GA from SKAPS Industries the property described above, in apparent good order except as noted (contents and condition of packages unknown), marked, consigned, and destined as indicated above, which said Carrier (the word "Carrier" being understood throughout this Shipping Order as meaning the person or corporation in possession of the property) agrees to carry to the place of delivery at said destination. It is mutually agreed as to each Carrier of all or any of said property, over all or any portion of said route to destination and as to each party at any time interested in all or any of said property, that every service performed here under shall be subject to either: (a) if the shipper noted herein is SKAPS Industries as indicated by the designation of the "Shipper" to be SKAPS Industries, then the Shipper and Carrier are subject to the terms and conditions contained in the Contract for truck Transportation existing between the parties or (b) if the Shipper noted herein is not SKAPS Industries then SKAPS Industries is acting solely as the agent for the denoted Shipper, and thus every aspect of the service to be perform here under between the Shipper and the Carrier shall be subject to all the terms and conditions of the Uniform Domestic Straight Bill of Lading set forth (1) in Official Southern, Western, and Illinois Freight Classifications in effect on the date hereof, if this a rail-water shipment, or (2) in the applicable motor carrier classification or tariff if this is a motor carrier shipment. When acting in the capacity of an agent for a Shipper in placing the material in transit on behalf of a Shipper, SKAPS Industries accepts no liability for loss of cargo, damage to containers, or any other consequences occurring during transportation. Carrier having agreed that the transportation arrangement was initiated by the Shipper and not by SKAPS Industries Subject to the above terms and conditions as to which party is the Shipper, Shipper hereby certifies that he is familiar with the terms and conditions that govern the transportation of this shipment, and the said terms and conditions are hereby agreed and accepted for himself and his assigns.

COMShippingDefinitive.rpt

GEOSYNTHETIC INVENTORY CONTROL LOG

PROJECT NUMBER: 130 2962CQA **PROJECT TITLE:** OU3 RA Construction
OWNER: Solutia
LOCATION: Anniston AL **CONTRACTOR:** Taylor

MATERIAL TYPE : GEOMEMBRANE GEONET GEOTEXTILE ~~OTHER~~ Composite
DATE OF ARRIVAL: 10/29/15 **DATE OF INVENTORY:** 10/28/15
MATERIAL MANUFACTURER: SKAPS **INVENTORY MONITOR:** SL
PRODUCT IDENTIFICATION: TN 340 - 2 - 8 **CONDITION IN TRUCK:** Fair
TRUCK TYPE: Flat bed **UNLOADING METHOD:** Loader

	ROLL NUMBER	BATCH OR LOT NO.	MATERIAL DIMENSIONS LENGTH	WIDTH	THICKNESS OR WEIGHT	QC CERT Y/N	CONF. SAMP. Y/N	OTHER	REMARKS
1	0153		230	14.5	965				
2	0143		230	14.5	558				
3	0141		230	14.5	955				
4	0148		230	14.5	972				
5	0140		230	14.5	957	✓			
6	0147		230	14.5	968				
7	0138		230	14.5	959				
8	0139		230	14.5	958				
9	0137		230	14.5	967				
10	0136		230	14.5	955				
11	0145		230	14.5	958				
12	0146		230	14.5	975				
13	0159		230	14.5	961				
14	0151		230	14.5	964				
15	0152		230	14.5	961				
16	0149		230	14.5	960				
17	0155		230	14.5	966				
18	0154		230	14.5	968				
19	0144		230	14.5	960				
20	0150		230	14.5	966	✓			
21	0142		230	14.5	954				
22	0157		230	14.5	962				
23	0160		230	14.5	960	✓			
24	0156		230	14.5	970				
25									

GCS FORM: G2
(JUNE 1992)

REVIEWED BY: _____ DATE: _____

GOLDER ASSOCIATES

STRAIGHT BILL OF LADING ORIGINAL-NOT NEGOTIABLE

SKAPS Industries
571 Industrial Parkway
Commerce, GA 30529
Ph: 7060-336-7000 Fax: 706-336-7007

Bill of Lading #: C00008830
Ship Date: 10/7/15
Sales Order #: C002137
Customer Name: Plastic Fusion Fabricators, Inc.
Cust. P.O. #: P15896
Ship Via: Flatbed
Delivery Terms: Plant / PPA
Container #:
Seal #:

SHIP-TO:
Project: Solutia LF Closure, AL
Address: 702 Clydesdale Avenue
City, State, Zip: Anniston, AL, 36201
Contact: Randy/Ellis.Bennett
Phone: 256.419.1199/256-835-1800

SIGN HERE FOR SHIPPER: _____

SHIPPER ADDRESS: 571 INDUSTRIAL PKWY.
COMMERCE, GA 30529

Product Code: TN240-2-8

No	Roll #	Sq. Ft.
1	0066381010001	3,335.00
2	0066381010002	3,335.00
3	0066381010003	3,335.00
4	0066381010004	3,335.00
5	0066381010005	3,335.00
6	0066381010006	3,335.00
7	0066381010007	3,335.00
8	0066381010008	3,335.00
9	0066381010009	3,335.00
10	0066381010010	3,335.00
11	0066381010011	3,335.00
12	0066381010012	3,335.00
13	0066381010013	3,335.00
14	0066381010014	3,335.00
15	0066381010015	3,335.00
16	0066381010016	3,335.00
17	0066381010017	3,335.00
18	0066381010018	3,335.00
19	0066381010019	3,335.00
20	0066381010020	3,335.00
21	0066381010021	3,335.00
22	0066381010022	3,335.00
23	0066381010023	3,335.00
24	0066381010024	3,335.00
25	0066381010025	3,335.00
26	0066381010026	3,335.00
27	0066381010027	3,335.00

Total Rolls: 27
Total Sq Feet: 90,045.00
Total Weight (lbs): 24,537.00

Bags of Ties: 2

Driver sign below if you have received above mentioned items :

Driver's Sign: _____

ATTN RECEIVER: Please sign below if you have received the items mentioned on the BOL and any discrepencies must be reported to SKAPS Industries within 7 days of receipt of goods.

Receiver Print Name	Receiver's Signature
Receive Date	Receiver's Company Name

Driver Requirements:

1) For Monday delivery driver must call on Friday.
2) Driver must call 706-336-7000 when unloaded.
3) Driver must call and advise of any delay in transit.
4) A copy of this bill-of-lading must accompany freight invoice, failure to do this will result in delayed payments.

Delivery Timings: Mon-Fri,7am-4pm
Driver's Name: Shawn Eastman
Driver's Sign: _____
Driver's Cell Phone #: 501-790-1492
Trucking Co.: Cowboy logistics
Trucking Co. Phone #: 205-918-8152
Broker: TQL
Date: 10/7/15
Truck Departure Time: _____

Comments:

Driver please call 24 hours prior to delivery
Freight view shipper # : 5878001

CARRIER MUST COLLECT THE FREIGHT FROM THE BROKER ONLY

Received at Commerce, GA from SKAPS Industries the property described above, in apparent good order except as noted (contents and condition of packages unknown), marked, consigned, and destined as indicated above, which said Carrier (the word "Carrier" being understood throughout this Shipping Order as meaning the person or corporation in possession of the property) agrees to carry to the place of delivery at said destination. It is mutually agreed as to each Carrier of all or any of said property, over all or any portion of said route to destination and as to each party at any time interested in all or any of said property, that every service performed here under shall be subject to either: (a) if the shipper noted herein is SKAPS Industries as indicated by the designation of the "Shipper" to be SKAPS Industries, then the Shipper and Carrier are subject to the terms and conditions contained in the Contract for truck Transportation existing between the parties or (b) if the Shipper noted herein is not SKAPS Industries then SKAPS Industries is acting solely as the agent for the denoted Shipper, and thus every aspect of the service to be perform here under between the Shipper and the Carrier shall be subject to all the terms and conditions of the Uniform Domestic Straight Bill of Lading set forth (1) in Official,Southern, Western, and Illinois Freight Classifications in effect on the date hereof, if this a rail-water shipment, or (2) in the applicable motor carrier classification or tariff if this is a motor carrier shipment. When acting in the capacity of an agent for a Shipper in placing the material in transit on behalf of a Shipper, SKAPS Industries accepts no liability for loss of cargo, damage to containers, or any other consequences occurring during transportation. Carrier having agreed that the transportation arrangement was initiated by the Shipper and not by SKAPS Industries Subject to the above terms and conditions as to which party is the Shipper, Shipper hereby certifies that he is familiar with the terms and conditions that govern the transportation of this shipment, and the said terms and conditions are hereby agreed and accepted for himself and his assigns.

COMShippingDefinitive.rpt

STRAIGHT BILL OF LADING ORIGINAL-NOT NEGOTIABLE

SKAPS Industries
571 Industrial Parkway
Commerce, GA 30529
Ph: 7060-336-7000 Fax: 706-336-7007

Bill of Lading #: C00008842
Ship Date: 10/8/15
Sales Order #: C002137
Customer Name: Plastic Fusion Fabricators, Inc.
Cust. P.O. #: P15896
Ship Via: Flatbed
Delivery Terms: Plant / PPA
Container #:
Seal #:

SHIP-TO:
Project: Solutia LF Closure, AL
Address: 702 Clydesdale Avenue
City, State, Zip: Anniston, AL, 36201
Contact: Randy/Ellis Bennett
Phone: 256.419.1199/256-835-1800

SIGN HERE FOR SHIPPER: _____

SHIPPER ADDRESS: 571 INDUSTRIAL PKWY.
COMMERCE, GA 30529

ATTN RECEIVER: Please sign below if you have received the items mentioned on the BOL and any discrepencies must be reported to SKAPS Industries within 7 days of receipt of goods.

Receiver Print Name	Receiver's Signature
Receive Date	Receiver's Company Name

Product Code: TN240-2-8

No	Roll #	Sq. Ft.
1	0066381010028	3,335.00
2	0066381010029	3,335.00
3	0066381010030	3,335.00
4	0066381010031	3,335.00
5	0066381010032	3,335.00
6	0066381010033	3,335.00
7	0066381010034	3,335.00
8	0066381010035	3,335.00
9	0066381010036	3,335.00
10	0066381010037	3,335.00
11	0066381010038	3,335.00
12	0066381010039	3,335.00
13	0066381010040	3,335.00
14	0066381010041	3,335.00
15	0066381010042	3,335.00
16	0066381010043	3,335.00
17	0066381010044	3,335.00
18	0066381010045	3,335.00
19	0066381010046	3,335.00
20	0066381010047	3,335.00
21	0066381010048	3,335.00
22	0066381010049	3,335.00
23	0066381010050	3,335.00
24	0066381010051	3,335.00
25	0066381010052	3,335.00
26	0066381010053	3,335.00
27	0066381010054	3,335.00

Total Rolls: 27
Total Sq Feet: 90,045.00
Total Weight (lbs): 24,619.00

Bags of Ties: 2

Driver sign below if you have received above mentioned items :

Driver's Sign: _____

Driver Requirements:

1) For Monday delivery driver must call on Friday.
2) Driver must call 706-336-7000 when unloaded.
3) Driver must call and advise of any delay in transit.
4) A copy of this bill-of-lading must accompany freight invoice, failure to do this will result in delaved payments.

Delivery Timings: Mon-Fri 7am-4pm
Driver's Name: _____
Driver's Sign: _____
Driver's Cell Phone #: 316-303-1398
Trucking Co.: _____
Trucking Co. Phone #: _____
Broker: TQL
Date: 10/8/15
Truck Departure Time: _____

Comments:

Driver please call 24 hours prior to delivery
Freight view shipper # : 5878026

CARRIER MUST COLLECT THE FREIGHT FROM THE BROKER ONLY

Received at Commerce, GA from SKAPS Industries the property described above, in apparent good order except as noted (contents and condition of packages unknown), marked, consigned, and destined as indicated above, which said Carrier (the word "Carrier" being understood throughout this Shipping Order as meaning the person or corporation in possession of the property) agrees to carry to the place of delivery at said destination. It is mutually agreed as to each Carrier of all or any of said property, over all or any portion of said route to destination and as to each party at any time interested in all or any of said property, that every service performed here under shall be subject to either: (a) If the shipper noted herein is SKAPS Industries as indicated by the designation of the "Shipper" to be SKAPS Industries, then the Shipper and Carrier are subject to the terms and conditions contained in the Contract for truck Transportation existing between the parties or (b) if the Shipper noted herein is not SKAPS Industries then SKAPS Industries is acting solely as the agent for the denoted Shipper, and thus every aspect of the service to be perform here under between the Shipper and the Carrier shall be subject to all the terms and conditions of the Uniform Domestic Straight Bill of Lading set forth (1) in Official Southern, Western, and Illinois Freight Classifications in effect on the date hereof, if this a rail-water shipment, or (2) in the applicable motor carrier classification or tariff if this is a motor carrier shipment. When acting in the capacity of an agent for a Shipper in placing the material in transit on behalf of a Shipper, SKAPS Industries accepts no liability for loss of cargo, damage to containers, or any other consequences occurring during transportation. Carrier having agreed that the transportation arrangement was initiated by the Shipper and not by SKAPS Industries Subject to the above terms and conditions as to which party is the Shipper, Shipper hereby certifies that he is familiar with the terms and conditions that govern the transportation of this shipment, and the said terms and conditions are hereby agreed and accepted for himself and his assigns.

COMShippingDefinitive.rpt

GEOSYNTHETIC INVENTORY CONTROL LOG

PROJECT NUMBER: 130 2962CQA
PROJECT TITLE: OU3 RA Construction
OWNER: Solutia
LOCATION: Anniston AL
CONTRACTOR: Taylor

MATERIAL TYPE : GEOMEMBRANE GEONET GEOTEXTILE OTHER
DATE OF ARRIVAL: 10/8/15 8:30 am
DATE OF INVENTORY:
MATERIAL MANUFACTURER: SKAPS
INVENTORY MONITOR:
PRODUCT IDENTIFICATION: TN240-2-8 GEOCOMP.
CONDITION IN TRUCK: SLIGHTLY COMPRESSED
TRUCK TYPE: FLAT BED USDOT 2306561
UNLOADING METHOD: FORK LIFT

UNLOADED ORDER	ROLL NUMBER	BATCH OR LOT NO.	MATERIAL DIMENSIONS LENGTH	WIDTH	THICKNESS OR WEIGHT	QC CERT Y/N	CONF. SAMP. Y/N	OTHER	REMARKS
24 1	66381010001		~~14.5~~ 230	14.5	933	Y			
26 2	2		3335 Ft²		925				
9 3	3		✓	✓	917				
11 4	4		✓	✓	906				
19 5	5		✓	✓	910				
21 6	6		✓	✓	909				
23 7	7		✓	✓	914				
25 8	8		✓	✓	910				
18 9	9		✓	✓	912				
22 10	10		✓	✓	903	Y			
10 11	11		✓	✓	905				
15 12	12		✓	✓	903				
20 13	13		✓	✓	906				
12 14	14		✓	✓	908				
14 15	15		✓	✓	911				
16 16	16		✓	✓	924				
4 17	17		✓	✓	908				
27 18	18		✓	✓	905				
13 19	19		✓	✓	909				
17 20	20		✓	✓	901	Y			
1 21	21		✓	✓	902				SLIGHT DAMAGE END EXPOSED
3 22	22		✓	✓	900				
7 23	23		✓	✓	913				
5 24	24		✓	✓	898				
2 25	25		✓	✓	899				

GCS FORM: G2
(JUNE 1992)

REVIEWED BY: DATE:

GOLDER ASSOCIATES

BILL OF LADING # C00008830

GEOSYNTHETIC INVENTORY CONTROL LOG

PROJECT NUMBER: 130 2962CQA
PROJECT TITLE: OU3 RA Construction
OWNER: Solutia
LOCATION: Anniston AL
CONTRACTOR: Taylor

MATERIAL TYPE : GEOMEMBRANE GEONET GEOTEXTILE OTHER
DATE OF ARRIVAL:
MATERIAL MANUFACTURER:
PRODUCT IDENTIFICATION:
TRUCK TYPE:
DATE OF INVENTORY:
INVENTORY MONITOR:
CONDITION IN TRUCK:
UNLOADING METHOD:

	ROLL NUMBER	BATCH OR LOT NO.	MATERIAL DIMENSIONS			QC CERT Y / N	CONF. SAMP. Y / N	OTHER	REMARKS
			LENGTH	WIDTH	THICKNESS OR WEIGHT				
1	26		✓	✓	901				
2	27		✓	✓	905				
3									
4									
5									
6									
7									
8									
9									
10									
11									
12									
13									
14									
15									
16									
17									
18									
19									
20									
21									
22									
23									
24									
25									

GCS FORM: G2
(JUNE 1992)

REVIEWED BY:
DATE:

GOLDER ASSOCIATES

GEOSYNTHETIC INVENTORY CONTROL LOG

PROJECT NUMBER: 130 2962CQA
PROJECT TITLE: OU3 RA Construction
OWNER: Solutia
LOCATION: Anniston AL
CONTRACTOR: Taylor

MATERIAL TYPE : GEOMEMBRANE GEONET GEOTEXTILE OTHER
TRUCK #2
DATE OF ARRIVAL: 10/9/15 7:00
DATE OF INVENTORY:
MATERIAL MANUFACTURER: SKAPS
INVENTORY MONITOR:
PRODUCT IDENTIFICATION: TN 240 2-B
CONDITION IN TRUCK: GOOD
TRUCK TYPE: FLATBED HARVEY TRANS. USDOT 735505
UNLOADING METHOD: FORKLIFT

UNLOAD ORDER	ROLL NUMBER	BATCH OR LOT NO.	MATERIAL DIMENSIONS LENGTH	WIDTH	THICKNESS OR WEIGHT	QC CERT Y/N	CONF. SAMP. Y/N	OTHER	REMARKS
26 1	06638101002B		~~14.5~~ 230	14.5	930				
19 2	29		✓	✓	937				
24 3	30		✓	✓	913	Y	Y		
20 4	31		✓	✓	922				
18 5	32		✓	✓	920				
16 6	33		✓	✓	900				
27 7	34		✓	✓	899				FELL OFF TRUCK
1 8	35		✓	✓	903				
3 9	36		✓	✓	905				
10 10	37		✓	✓	902				
12 11	38		✓	✓	908				
21 12	39		✓	✓	899				
23 13	40		✓	✓	890	Y	Y		
25 14	41		✓	✓	910				
11 15	42		✓	✓	908				
22 16	43		✓	✓	914				
4 17	44		✓	✓	915				
2 18	45		✓	✓	909				
17 19	46		✓	✓	911				
8 20	47		✓	✓	914				
5 21	48		✓	✓	913				
9 22	49		✓	✓	915				
14 23	50		✓	✓	916	Y	Y		
15 24	51		✓	✓	912				
7 25	52		✓	✓	916				

GCS FORM: G2
(JUNE 1992)

REVIEWED BY: DATE:

GOLDER ASSOCIATES

GEOSYNTHETIC INVENTORY CONTROL LOG

PROJECT NUMBER: 130 2962CQA
PROJECT TITLE: OU3 RA Construction
OWNER: Solutia
LOCATION: Anniston AL
CONTRACTOR: Taylor

MATERIAL TYPE : GEOMEMBRANE (GEONET) (GEOTEXTILE) OTHER
DATE OF ARRIVAL: 10/9/15 7:00
MATERIAL MANUFACTURER: SKAPS
PRODUCT IDENTIFICATION: TN240-2-8
TRUCK TYPE: FLATBED, HARVEY TRANS. USDOT 735505
DATE OF INVENTORY:
INVENTORY MONITOR:
CONDITION IN TRUCK: GOOD
UNLOADING METHOD: FORKLIFT

	ROLL NUMBER	BATCH OR LOT NO.	MATERIAL DIMENSIONS LENGTH	WIDTH	THICKNESS OR WEIGHT	QC CERT Y/N	CONF. SAMP. Y/N	OTHER	REMARKS
6 1	53		230	14.5	913				
13 2	54		✓	✓	915				
3									
4									
5									
6									
7									
8									
9									
10									
11									
12									
13									
14									
15									
16									
17									
18									
19									
20									
21									
22									
23									
24									
25									

GCS FORM: G2
(JUNE 1992)

REVIEWED BY:
DATE:

GOLDER ASSOCIATES

GEOSYNTHETIC INVENTORY CONTROL LOG

PROJECT NUMBER: 130 2962CQA **PROJECT TITLE:** OU3 RA Construction
OWNER: Solutia
LOCATION: Anniston AL **CONTRACTOR:** Taylor

MATERIAL TYPE : GEOMEMBRANE GEONET GEOTEXTILE (OTHER) Composite
DATE OF ARRIVAL: 10/13/15 **DATE OF INVENTORY:** 10/13/15
MATERIAL MANUFACTURER: JKAPS Industries **INVENTORY MONITOR:** SL
PRODUCT IDENTIFICATION: TN240-2-8 **CONDITION IN TRUCK:** Good
TRUCK TYPE: Flat Bed **UNLOADING METHOD:**

	ROLL NUMBER	BATCH OR LOT NO.	MATERIAL DIMENSIONS LENGTH	WIDTH	THICKNESS OR WEIGHT	QC CERT Y/N	CONF. SAMP. Y/N	OTHER	REMARKS
1	6638101A088		230	14.5	890		Y		
2	0079		230	14.5	893				
3	0074		230	14.5	898				
4	0073		230	14.5	894				
5	0081		230	14.5	901				
6	0075		230	14.5	885				
7	0078		230	14.5	886				
8	0077		230	14.5	892				
9	0076		230	14.5	890				
10	0061		230	14.5	924				
11	0070		230	14.5	902		Y		
12	0062		230	14.5	921				
13	0063		230	14.5	926				
14	0066		230	14.5	920				
15	0064		230	14.5	920				
16	0072		230	14.5	896				
17	0071		230	14.5	900				
18	0069		230	14.5	898				
19	0055		230	14.5	917				
20	0068		230	14.5	900				
21	0056		230	14.5	919				
22	0057		230	14.5	920				
23	0059		230	14.5	930				
24	0058		230	14.5	922				Small hole
25	0065		230	14.5	923				

GCS FORM: G2
(JUNE 1992)

REVIEWED BY: _____ DATE: _____

GOLDER ASSOCIATES

GEOSYNTHETIC INVENTORY CONTROL LOG

PROJECT NUMBER: 130 2962CQA
PROJECT TITLE: OU3 RA Construction
OWNER: Solutia
LOCATION: Anniston AL
CONTRACTOR: Taylor

MATERIAL TYPE : GEOMEMBRANE GEONET GEOTEXTILE (OTHER) Composite
DATE OF ARRIVAL: 10/13/15
DATE OF INVENTORY: 10/13/15
MATERIAL MANUFACTURER: SKAPS
INVENTORY MONITOR: SC
PRODUCT IDENTIFICATION: TN240 - 2 - 8
CONDITION IN TRUCK: Good
TRUCK TYPE: Flat Bed
UNLOADING METHOD: Loader

	ROLL NUMBER	BATCH OR LOT NO.	MATERIAL DIMENSIONS LENGTH	WIDTH	THICKNESS OR WEIGHT	QC CERT Y/N	CONF. SAMP. Y/N	OTHER	REMARKS
1	663810100 67		230	14.5	60				
2	0060		230	14.5	91 9		✓		
3									
4									
5									
6									
7									
8									
9									
10									
11									
12									
13									
14									
15									
16									
17									
18									
19									
20									
21									
22									
23									
24									
25									

GCS FORM: G2
(JUNE 1992)

REVIEWED BY: _____ DATE: _____

GOLDER ASSOCIATES

STRAIGHT BILL OF LADING ORIGINAL-NOT NEGOTIABLE

SKAPS Industries
571 Industrial Parkway
Commerce, GA 30529
Ph: 7060-336-7000 Fax: 706-336-7007

Bill of Lading #: C00008869
Ship Date: 10/12/15
Sales Order #: C002137
Customer Name: Plastic Fusion Fabricators, Inc.
Cust. P.O. #: P15896
Ship Via: Flatbed
Delivery Terms: Plant / PPA
Container #:
Seal #:

SHIP-TO:
Project: Solutia LF Closure, AL
Address: 702 Clydesdale Avenue
City, State, Zip: Anniston, AL, 36201
Contact: Randy/Ellis Bennett
Phone: 256.419.1199/256-835-1800

SIGN HERE FOR SHIPPER: _____

SHIPPER ADDRESS: 571 INDUSTRIAL PKWY.
COMMERCE, GA 30529

ATTN RECEIVER: Please sign below if you have received the items mentioned on the BOL and any discrepencies must be reported to SKAPS Industries within 7 days of receipt of goods.

Receiver Print Name	Receiver's Signature
Receive Date	Receiver's Company Name

Product Code: TN240-2-8

No	Roll #	Sq. Ft.
1	0066381010055	3,335.00
2	0066381010056	3,335.00
3	0066381010057	3,335.00
4	0066381010058	3,335.00
5	0066381010059	3,335.00
6	0066381010060	3,335.00
7	0066381010061	3,335.00
8	0066381010062	3,335.00
9	0066381010063	3,335.00
10	0066381010064	3,335.00
11	0066381010065	3,335.00
12	0066381010066	3,335.00
13	0066381010067	3,335.00
14	0066381010068	3,335.00
15	0066381010069	3,335.00
16	0066381010070	3,335.00
17	0066381010071	3,335.00
18	0066381010072	3,335.00
19	0066381010073	3,335.00
20	0066381010074	3,335.00
21	0066381010075	3,335.00
22	0066381010076	3,335.00
23	0066381010077	3,335.00
24	0066381010078	3,335.00
25	0066381010079	3,335.00
26	0066381010080	3,335.00
27	0066381010081	3,335.00

Total Rolls: 27
Total Sq Feet: 90,045.00
Total Weight (lbs): 24,480.00

Bags of Ties: 2

Driver sign below if you have received above mentioned items :

Driver's Sign: Ron McClung

Driver Requirements:

1) For Monday delivery driver must call on Friday.
2) Driver must call 706-336-7000 when unloaded.
3) Driver must call and advise of any delay in transit.
4) A copy of this bill-of-lading must accompany freight invoice, failure to do this will result in delaved payments.

Delivery Timings: Mon-Fri 7am-4pm
Driver's Name: _____
Driver's Sign: Ron McClung
Driver's Cell Phone #: Ron McClung
Trucking Co.: _____
Trucking Co. Phone #: _____
Broker: TQL 404-TL-4113
Date: 10/12/15
Truck Departure Time: _____

Comments:

Driver please call 24 hours prior to delivery
Freight view shipper # : 5878030

CARRIER MUST COLLECT THE FREIGHT FROM THE BROKER ONLY

Received at Commerce, GA from SKAPS Industries the property described above, in apparent good order except as noted (contents and condition of packages unknown), marked, consigned, and destined as indicated above, which said Carrier (the word "Carrier" being understood throughout this Shipping Order as meaning the person or corporation in possession of the property) agrees to carry to the place of delivery at said destination. It is mutually agreed as to each Carrier of all or any of said property, over all or any portion of said route to destination and as to each party at any time interested in all or any of said property, that every service performed here under shall be subject to either: (a) if the shipper noted herein is SKAPS Industries as indicated by the designation of the "Shipper" to be SKAPS Industries, then the Shipper and Carrier are subject to the terms and conditions contained in the Contract for truck Transportation existing between the parties or (b) if the Shipper noted herein is not SKAPS Industries then SKAPS Industries is acting solely as the agent for the denoted Shipper, and thus every aspect of the service to be perform here under between the Shipper and the Carrier shall be subject to all the terms and conditions of the Uniform Domestic Straight Bill of Lading set forth (1) in Official Southern, Western, and Illinois Freight Classifications in effect on the date hereof, if this a rail-water shipment, or (2) in the applicable motor carrier classification or tariff if this is a motor carrier shipment. When acting in the capacity of an agent for a Shipper in placing the material in transit on behalf of a Shipper, SKAPS Industries accepts no liability for loss of cargo, damage to containers, or any other consequences occurring during transportation. Carrier having agreed that the transportation arrangement was initiated by the Shipper and not by SKAPS Industries Subject to the above terms and conditions as to which party is the Shipper, Shipper hereby certifies that he is familiar with the terms and conditions that govern the transportation of this shipment, and the said terms and conditions are hereby agreed and accepted for himself and his assigns.

COMShippingDefinitive.rpt

STRAIGHT BILL OF LADING ORIGINAL-NOT NEGOTIABLE

SKAPS Industries
571 Industrial Parkway
Commerce, GA 30529
Ph: 7060-336-7000 Fax: 706-336-7007

Bill of Lading #: C00008900
Ship Date: 10/14/15
Sales Order #: C002137
Customer Name: Plastic Fusion Fabricators, Inc.
Cust. P.O. #: P15896
Ship Via: Flatbed
Delivery Terms: Plant / PPA
Container #:
Seal #:

Truck 4

SHIP-TO:
Project: Solutia LF Closure, AL
Address: 702 Clydesdale Avenue
City, State, Zip: Anniston, AL, 36201
Contact: Randy/Ellis Bennett
Phone: 256.419.1199/256-835-1800

SIGN HERE FOR SHIPPER: _____

SHIPPER ADDRESS: 571 INDUSTRIAL PKWY.
COMMERCE, GA 30529

ATTN RECEIVER: Please sign below if you have received the items mentioned on the BOL and any discrepencies must be reported to SKAPS Industries within 7 days of receipt of goods.

Receiver Print Name	Receiver's Signature
Receive Date	Receiver's Company Name

Product Code: TN240-2-8

No	Roll #	Sq. Ft.
1	0066381010082	3,335.00
2	0066381010083	3,335.00
3	0066381010084	3,335.00
4	0066381010085	3,335.00
5	0066381010086	3,335.00
6	0066381010087	3,335.00
7	0066381010088	3,335.00
8	0066381010089	3,335.00
9	0066381010090	3,335.00
10	0066381010091	3,335.00
11	0066381010092	3,915.00
12	0066381010093	3,335.00
13	0066381010094	3,335.00
14	0066381010095	3,335.00
15	0066381010096	3,335.00
16	0066381010097	3,335.00
17	0066381010098	3,335.00
18	0066381010099	3,335.00
19	0066381010100	3,335.00
20	0066381010101	3,335.00
21	0066381010102	3,335.00
22	0066381010103	3,335.00
23	0066381010104	3,335.00
24	0066381010105	3,335.00
25	0066381010106	3,335.00
26	0066381010107	3,335.00
27	0066381010108	3,335.00

Total Rolls: 27
Total Sq Feet: 90,625.00
Total Weight (lbs): 25,986.00

Bags of Ties: 2

Driver sign below if you have received above mentioned items :

Driver's Sign: _____

Driver Requirements:

1) For Monday delivery driver must call on Friday.
2) Driver must call 706-336-7000 when unloaded.
3) Driver must call and advise of any delay in transit.
4) A copy of this bill-of-lading must accompany freight invoice, failure to do this will result in delaved payments.

Delivery Timings: Mon-Fri 7am-4pm
Driver's Name: _____
Driver's Sign: _____
Driver's Cell Phone #: _____
Trucking Co.: _____
Trucking Co. Phone #: _____
Broker: TQL
Date: 10/14/15
Truck Departure Time: _____

Comments:

Driver please call 24 hours prior to delivery
Freight view shipper # : 5902032

CARRIER MUST COLLECT THE FREIGHT FROM THE BROKER ONLY

Received at Commerce, GA from SKAPS Industries the property described above, in apparent good order except as noted (contents and condition of packages unknown), marked, consigned, and destined as indicated above, which said Carrier (the word "Carrier" being understood throughout this Shipping Order as meaning the person or corporation in possession of the property) agrees to carry to the place of delivery at said destination. It is mutually agreed as to each Carrier of all or any of said property, over all or any portion of said route to destination and as to each party at any time interested in all or any of said property, that every service performed here under shall be subject to either: (a) if the shipper noted herein is SKAPS Industries as indicated by the designation of the "Shipper" to be SKAPS Industries, then the Shipper and Carrier are subject to the terms and conditions contained in the Contract for truck Transportation existing between the parties or (b) if the Shipper noted herein is not SKAPS Industries then SKAPS Industries is acting solely as the agent for the denoted Shipper, and thus every aspect of the service to be perform here under between the Shipper and the Carrier shall be subject to all the terms and conditions of the Uniform Domestic Straight Bill of Lading set forth (1) in Official Southern, Western, and Illinois Freight Classifications in effect on the date hereof, if this a rail-water shipment, or (2) in the applicable motor carrier classification or tariff if this is a motor carrier shipment. When acting in the capacity of an agent for a Shipper in placing the material in transit on behalf of a Shipper, SKAPS Industries accepts no liability for loss of cargo, damage to containers, or any other consequences occurring during transportation. Carrier having agreed that the transportation arrangement was initiated by the Shipper and not by SKAPS Industries Subject to the above terms and conditions as to which party is the Shipper, Shipper hereby certifies that he is familiar with the terms and conditions that govern the transportation of this shipment, and the said terms and conditions are hereby agreed and accepted for himself and his assigns.

COMShippingDefinitive.rpt

GEOSYNTHETIC INVENTORY CONTROL LOG

PROJECT NUMBER: 130 2962CQA
PROJECT TITLE: OU3 RA Construction
OWNER: Solutia
LOCATION: Anniston AL
CONTRACTOR: Taylor

MATERIAL TYPE : GEOMEMBRANE GEONET GEOTEXTILE (OTHER) Composite
DATE OF ARRIVAL: 10/15/15
MATERIAL MANUFACTURER: SKAPS
PRODUCT IDENTIFICATION: TN240-2-8
TRUCK TYPE: Flat Bed

DATE OF INVENTORY: 10/15/15
INVENTORY MONITOR: SL
CONDITION IN TRUCK: Good
UNLOADING METHOD: Loader

	ROLL NUMBER	BATCH OR LOT NO.	MATERIAL DIMENSIONS LENGTH	WIDTH	THICKNESS OR WEIGHT	QC CERT Y/N	CONF. SAMP. Y/N	OTHER	REMARKS
1	6638101 0082		230	14.5	940				
2	0090		230	14.5	954	✓			
3	0107		230	14.5	968				
4	0102		230	14.5	970				
5	0083		230	14.5	948				
6	0108		230	14.5	970				
7	0084		230	14.5	952				
8	0095		230	14.5	952				
9	0099		230	14.5	972				
10	0096		230	14.5	941				
11	0101		230	14.5	971				
12	0104		230	14.5	971				
13	0100		230	14.5	973				
14	0093 ~~0085~~		~~230~~	14.5	928				
15	0103		230	14.5	972				
16	0094		230	14.5	930				
17	0097		230	14.5	950				
18	0089		230	14.5	958				
19	0098		230	14.5	961				
20	0086		230	14.5	952				
21	0106		230	14.5	970				
22	0088		230	14.5	956				
23	0085		230	14.5	956				
24	0105 ~~0087~~		230	14.5	973				
25	0091		230	14.5	956				

GCS FORM: G2
(JUNE 1992)

REVIEWED BY: _____ DATE: _____

GOLDER ASSOCIATES

GEOSYNTHETIC INVENTORY CONTROL LOG

PROJECT NUMBER: 130 2962CQA **PROJECT TITLE:** OU3 RA Construction
OWNER: Solutia
LOCATION: Anniston AL **CONTRACTOR:** Taylor

MATERIAL TYPE : GEOMEMBRANE GEONET GEOTEXTILE (OTHER) Geocomposite
DATE OF ARRIVAL: 10/15-16 **DATE OF INVENTORY:** 10/15/15
MATERIAL MANUFACTURER: SKAPS **INVENTORY MONITOR:** SL
PRODUCT IDENTIFICATION: TN 240-2-8 **CONDITION IN TRUCK:** Good
TRUCK TYPE: Flat Bed **UNLOADING METHOD:** Loader

	ROLL NUMBER	BATCH OR LOT NO.	MATERIAL DIMENSIONS LENGTH	WIDTH	THICKNESS OR WEIGHT	QC CERT Y / N	CONF. SAMP. Y / N	OTHER	REMARKS
1	0052		230	14.5	1110				
2	0087		230	14.5	554				
3									
4									
5									
6									
7									
8									
9									
10									
11									
12									
13									
14									
15									
16									
17									
18									
19									
20									
21									
22									
23									
24									
25									

GCS FORM: G2
(JUNE 1992)

REVIEWED BY: _____ DATE: _____

GOLDER ASSOCIATES

STRAIGHT BILL OF LADING ORIGINAL-NOT NEGOTIABLE

SKAPS Industries
571 Industrial Parkway
Commerce, GA 30529
Ph: 7060-336-7000 Fax: 706-336-7007

Bill of Lading #: C00008936
Ship Date: 10/19/15
Sales Order #: C002137
Customer Name: Plastic Fusion Fabricators, Inc.
Cust. P.O. #: P15896
Ship Via: Flatbed
Delivery Terms: Plant / PPA
Container #:
Seal #:

SHIP-TO:
Project: Solutia LF Closure, AL
Address: 702 Clydesdale Avenue
City, State, Zip: Anniston, AL, 36201
Contact: Randy/Ellis Bennett
Phone: 256.419.1199/256-835-1800

SIGN HERE FOR SHIPPER: _____

SHIPPER ADDRESS: 571 INDUSTRIAL PKWY.
COMMERCE, GA 30529

Product Code: TN240-2-8

No	Roll #	Sq. Ft.
1	0066381010109	3,335.00
2	0066381010110	3,335.00
3	0066381010111	3,335.00
4	0066381010112	3,335.00
5	0066381010113	3,335.00
6	0066381010114	3,335.00
7	0066381010115	3,335.00
8	0066381010116	3,335.00
9	0066381010117	3,335.00
10	0066381010118	3,335.00
11	0066381010119	3,335.00
12	0066381010120	3,335.00
13	0066381010121	3,335.00
14	0066381010122	3,335.00
15	0066381010123	3,335.00
16	0066381010124	3,335.00
17	0066381010125	3,335.00
18	0066381010126	3,335.00
19	0066381010127	3,335.00
20	0066381010128	3,335.00
21	0066381010129	3,335.00
22	0066381010130	3,335.00
23	0066381010131	3,335.00
24	0066381010132	3,335.00
25	0066381010133	3,335.00
26	0066381010134	3,335.00
27	0066381010135	3,335.00

Total Rolls: 27
Total Sq Feet: 90,045.00
Total Weight (lbs): 25,453.00

Bags of Ties: 2

Driver sign below if you have received above mentioned items :

Driver's Sign: _____

ATTN RECEIVER: Please sign below if you have received the items mentioned on the BOL and any discrepencies must be reported to SKAPS Industries within 7 days of receipt of goods.

Receiver Print Name	Receiver's Signature
Receive Date	Receiver's Company Name

Driver Requirements:

1) For Monday delivery driver must call on Friday.
2) Driver must call 706-336-7000 when unloaded.
3) Driver must call and advise of any delay in transit.
4) A copy of this bill-of-lading must accompany freight invoice, failure to do this will result in delaved payments.

Delivery Timings: Mon-Fri 7am-4pm
Driver's Name: _____
Driver's Sign: _____
Driver's Cell Phone #: _____
Trucking Co.: _____
Trucking Co. Phone #: 813-210-1457
Broker: TQL
Date: 10/19/15
Truck Departure Time: _____

Comments:

Driver please call 24 hours prior to delivery
Freight view shipper # : 5920470
Note : 27 Timbers Provided

CARRIER MUST COLLECT THE FREIGHT FROM THE BROKER ONLY

Received at Commerce, GA from SKAPS Industries the property described above, in apparent good order except as noted (contents and condition of packages unknown), marked, consigned, and destined as indicated above, which said Carrier (the word "Carrier" being understood throughout this Shipping Order as meaning the person or corporation in possession of the property) agrees to carry to the place of delivery at said destination. It is mutually agreed as to each Carrier of all or any of said property, over all or any portion of said route to destination and as to each party at any time interested in all or any of said property, that every service performed here under shall be subject to either: (a) if the shipper noted herein is SKAPS Industries as indicated by the designation of the "Shipper" to be SKAPS Industries, then the Shipper and Carrier are subject to the terms and conditions contained in the Contract for truck Transportation existing between the parties or (b) if the Shipper noted herein is not SKAPS Industries then SKAPS Industries is acting solely as the agent for the denoted Shipper, and thus every aspect of the service to be perform here under between the Shipper and the Carrier shall be subject to all the terms and conditions of the Uniform Domestic Straight Bill of Lading set forth (1) in Official Southern, Western, and Illinois Freight Classifications in effect on the date hereof, if this a rail-water shipment, or (2) in the applicable motor carrier classification or tariff if this is a motor carrier shipment. When acting in the capacity of an agent for a Shipper in placing the material in transit on behalf of a Shipper, SKAPS Industries accepts no liability for loss of cargo, damage to containers, or any other consequences occurring during transportation. Carrier having agreed that the transportation arrangement was initiated by the Shipper and not by SKAPS Industries Subject to the above terms and conditions as to which party is the Shipper, Shipper hereby certifies that he is familiar with the terms and conditions that govern the transportation of this shipment, and the said terms and conditions are hereby agreed and accepted for himself and his assigns.

COMShippingDefinitive.rpt

GEOSYNTHETIC INVENTORY CONTROL LOG

PROJECT NUMBER: 130 2962CQA
PROJECT TITLE: OU3 RA Construction
OWNER: Solutia
LOCATION: Anniston AL
CONTRACTOR: Taylor

MATERIAL TYPE : GEOMEMBRANE GEONET GEOTEXTILE (OTHER) — Composite
DATE OF ARRIVAL: 10/20/15
MATERIAL MANUFACTURER: SKAPS
PRODUCT IDENTIFICATION: FN240-2-8
TRUCK TYPE: Flat bed
DATE OF INVENTORY: 10/20/15
INVENTORY MONITOR:
CONDITION IN TRUCK: good
UNLOADING METHOD: Crane

	ROLL NUMBER	BATCH OR LOT NO.	MATERIAL DIMENSIONS LENGTH	WIDTH	THICKNESS OR WEIGHT	QC CERT Y/N	CONF. SAMP. Y/N	OTHER	REMARKS
1	124		230	14.5	541				
2	0121		230	14.5	540	y			
3	119		230	14.5	543				
4	109		230	14.5	548				
5	120		230	14.5	542	y			
6	116		230	14.5	536				
7	131		230	14.5	542				
8	117		230	14.5	538				
9	111		230	14.5	550				
10	110		230	14.5	946				
11	126		230	14.5	546				
12	125		230	14.5	544				
13	127		230	14.5	544				
14	133		230	14.5	546				
15	122		230	14.5	540				
16	134		230	14.5	535				
17	113		230	14.5	544				
18	118		230	14.5	541				
19	112		230	14.5	546				
20	130		230	14.5	544	y			
21	114		230	14.5	540				
22	115		230	14.5	538				
23	129		230	14.5	546				
24	132		230	14.5	540				
25	135		230	14.5	544				

GCS FORM: G2
(JUNE 1992)

REVIEWED BY: _____ DATE: _____

GOLDER ASSOCIATES

GEOSYNTHETIC INVENTORY CONTROL LOG

PROJECT NUMBER: 130 2962CQA
PROJECT TITLE: OU3 RA Construction
OWNER: Solutia
LOCATION: Anniston AL
CONTRACTOR: Taylor

MATERIAL TYPE : GEOMEMBRANE GEONET GEOTEXTILE (OTHER) Composite
DATE OF ARRIVAL: 11/20/15
DATE OF INVENTORY: 11/20/15
MATERIAL MANUFACTURER: SKAPS
INVENTORY MONITOR: SC
PRODUCT IDENTIFICATION: TN240-2-8
CONDITION IN TRUCK: good
TRUCK TYPE: Flat Bed
UNLOADING METHOD: Loader

	ROLL NUMBER	BATCH OR LOT NO.	MATERIAL DIMENSIONS LENGTH	WIDTH	THICKNESS OR WEIGHT	QC CERT Y/N	CONF. SAMP. Y/N	OTHER	REMARKS
1	123		230	14.5	944				
2	128		230	14.5	544				
3									
4									
5									
6									
7									
8									
9									
10									
11									
12									
13									
14									
15									
16									
17									
18									
19									
20									
21									
22									
23									
24									
25									

GCS FORM: G2
(JUNE 1992)

REVIEWED BY: _____ DATE: _____

GOLDER ASSOCIATES

APPENDIX G2

Conformance Testing

APPENDIX G2.1

Quality Control Certificates

September 28, 2015
Plastic Fusion Fabricators, Inc.
3455 Stanwood Blvd
Huntsville, AL, 35811

Ref. : Solutia Landfill Closure, AL
Customer P.O. # P15896
Product : TN 240-2-8

We certify that the TN 240-2-8 drainage geocomposite, meets the project requirements as stated in the specifications. The properties listed in this section are:

Property	Test Method	Unit	Required Value	Qualifier
Geonet[3]				
Thickness	ASTM D 5199	mil	200	MAV
Carbon Black	ASTM D 4218	%	1.5 - 3.0	Range
Tensile Strength	ASTM D 7179	lbs/in	40	MAV[6]
Melt Flow	ASTM D 1238[2]	g/10 min	1.0	Maximum
Density	ASTM D 1505	g/cm^3	0.93	Minimum
Composite				
Ply Adhesion	ASTM D 7005	lb/in	1.0	MAV
Transmissivity[1]	ASTM D 4716	m^2/sec	1.0×10^{-4}	MAV
Geotextile[3 & 4]				
Fabric Weight	ASTM D 5261	oz/yd^2	8.0	MARV[5]
Grab Strength	ASTM D 4632	lbs	205	MARV
Grab Elongation	ASTM D 4632	%	50	MARV
CBR Puncture	ASTM D 6241	lbs	425	MARV
AOS	ASTM D 4751	US Sieve	80	MARV
UV Resistance	ASTM D 4355	%/hrs	70/500	MARV

Notes:

1 Transmissivity measured using water at 21 ± 2 °C (70 ± 4 °F) with a gradient of 0.1 and a confining pressure of 250 psf between ottawa sand & geomembrane after 100 hours.

2 Condition 190/2.16

3 Geotextile and Geonet properties are prior to lamination.

4 Geotextile data is provided by the supplier.

5 MARV is statistically defined as mean minus two standard deviations and it is the value which is exceeded by 97.5% of all the test data.

6 Minimum average value.

Sincerely,

Rajesh Patel

Rajesh Patel
QA Manager

APPROVED 5 QA

571 Industrial Parkway, Commerce, GA 30529 Ph : 706-336-7000 Fax : 706-336-7007 Email : contact@skaps.com

Product : **TN 240-2-8**
Project : **Solutia Landfill Closure, AL**

We, the Geocomposite Manufacturer, hereby certify the following for the material delivered to the above referenced project :

Roll	Geocomposite Roll Number	Geonet Roll Number	Geotextile Roll Number		Ply Adhesion (lb/in)		Geocomposite Transmissivity (m^2/sec)
			Side A	Side B	Minimum	Average	
1	66381010001	66381010001 - N	6638.050	6638.062	1.59	1.81	3.96×10^{-4}
2	66381010002	66381010002 - N	6638.050	6638.062			
3	66381010003	66381010003 - N	6638.050	6638.062			
4	66381010004	66381010004 - N	6638.050	6638.062			
5	66381010005	66381010005 - N	6638.050	6638.062			
6	66381010006	66381010006 - N	6638.048	6638.032			
7	66381010007	66381010007 - N	6638.048	6638.032			
8	66381010008	66381010008 - N	6638.048	6638.032			
9	66381010009	66381010009 - N	6638.048	6638.032			
10	66381010010	66381010010 - N	6638.048	6638.032	1.37	2.55	
11	66381010011	66381010011 - N	6638.041	6638.030			
12	66381010012	66381010012 - N	6638.041	6638.030			
13	66381010013	66381010013 - N	6638.041	6638.030			
14	66381010014	66381010014 - N	6638.041	6638.030			
15	66381010015	66381010015 - N	6638.041	6638.030			
16	66381010016	66381010016 - N	6638.054	6638.025			
17	66381010017	66381010017 - N	6638.054	6638.025			
18	66381010018	66381010018 - N	6638.054	6638.025			
19	66381010019	66381010019 - N	6638.054	6638.025			
20	66381010020	66381010020 - N	6638.054	6638.025	1.61	2.05	
21	66381010021	66381010021 - N	6638.069	6638.051			
22	66381010022	66381010022 - N	6638.069	6638.051			
23	66381010023	66381010023 - N	6638.069	6638.051			
24	66381010024	66381010024 - N	6638.069	6638.051			
25	66381010025	66381010025 - N	6638.069	6638.051			
26	66381010026	66381010026 - N	6638.066	6638.045			
27	66381010027	66381010027 - N	6638.066	6638.045			

571 Industrial Parkway, Commerce, GA 30529 Ph : 706-336-7000 Fax : 706-336-7007 Email : contact@skaps.com

Product : **TN 240-2-8**
Project : **Solutia Landfill Closure, AL**

We, the Geonet Manufacturer, hereby certify the following for the material sent to the above referenced project :

Geonet Roll Number	Resin Lot Number	Geonet Density (gm/cc)	Thickness (mils)	Carbon Black (%)	Tensile Strength (MD) (lb/in)	Transmissivity (m^2/sec)
66381010001 - N	ECUX 881012	0.9575	232	2.66	53	
66381010002 - N	ECUX 881012	0.9575				
66381010003 - N	ECUX 881012	0.9575				
66381010004 - N	ECUX 881012	0.9575				
66381010005 - N	ECUX 881012	0.9580	228	2.57	58	
66381010006 - N	ECUX 881012	0.9580				
66381010007 - N	ECUX 881012	0.9580				
66381010008 - N	ECUX 881012	0.9580				
66381010009 - N	ECUX 881012	0.9580				
66381010010 - N	ECUX 881012	0.9572	231	2.49	54	
66381010011 - N	ECUX 881012	0.9572				
66381010012 - N	ECUX 881012	0.9572				
66381010013 - N	ECUX 881012	0.9572				
66381010014 - N	ECUX 881012	0.9572				
66381010015 - N	ECUX 881012	0.9574	235	2.29	51	
66381010016 - N	ECUX 881012	0.9574				
66381010017 - N	ECUX 881012	0.9574				
66381010018 - N	ECUX 881012	0.9574				
66381010019 - N	ECUX 881012	0.9574				
66381010020 - N	ECUX 881012	0.9579	226	2.63	56	
66381010021 - N	ECUX 881012	0.9579				
66381010022 - N	ECUX 881012	0.9579				
66381010023 - N	ECUX 881012	0.9579				
66381010024 - N	ECUX 881012	0.9579				
66381010025 - N	ECUX 881012	0.9572	234	2.51	52	
66381010026 - N	ECUX 881012	0.9572				
66381010027 - N	ECUX 881012	0.9572				

571 Industrial Parkway, Commerce, GA 30529 Ph : 706-336-7000 Fax : 706-336-7007 Email : contact@skaps.com

Product : **TN 240-2-8**
Project : **Solutia Landfill Closure, AL**

We, the Geocomposite Manufacturer, hereby certify the following for the material delivered to the above referenced project :

Roll	Geocomposite Roll Number	Geonet Roll Number	Geotextile Roll Number		Ply Adhesion (lb/in)		Geocomposite Transmissivity (m^2/sec)
			Side A	Side B	Minimum	Average	
28	66381010028	66381010028 - N	6638.066	6638.045			
29	66381010029	66381010029 - N	6638.066	6638.045			
30	66381010030	66381010030 - N	6638.066	6638.045	1.39	2.29	
31	66381010031	66381010031 - N	6638.020	6638.009			
32	66381010032	66381010032 - N	6638.020	6638.009			
33	66381010033	66381010033 - N	6638.020	6638.009			
34	66381010034	66381010034 - N	6638.020	6638.009			
35	66381010035	66381010035 - N	6638.020	6638.009			
36	66381010036	66381010036 - N	6638.006	6638.035			
37	66381010037	66381010037 - N	6638.006	6638.035			
38	66381010038	66381010038 - N	6638.006	6638.035			
39	66381010039	66381010039 - N	6638.006	6638.035			
40	66381010040	66381010040 - N	6638.006	6638.035	1.28	1.90	
41	66381010041	66381010041 - N	6638.001	6638.044			
42	66381010042	66381010042 - N	6638.001	6638.044			
43	66381010043	66381010043 - N	6638.001	6638.044			
44	66381010044	66381010044 - N	6638.001	6638.044			
45	66381010045	66381010045 - N	6638.001	6638.044			
46	66381010046	66381010046 - N	6638.021	6638.002			
47	66381010047	66381010047 - N	6638.021	6638.002			
48	66381010048	66381010048 - N	6638.021	6638.002			
49	66381010049	66381010049 - N	6638.021	6638.002			
50	66381010050	66381010050 - N	6638.021	6638.002	1.23	2.30	
51	66381010051	66381010051 - N	6638.042	6638.034			
52	66381010052	66381010052 - N	6638.042	6638.034			
53	66381010053	66381010053 - N	6638.042	6638.034			
54	66381010054	66381010054 - N	6638.042	6638.034			

571 Industrial Parkway, Commerce, GA 30529 Ph : 706-336-7000 Fax : 706-336-7007 Email : contact@skaps.com

Product : **TN 240-2-8**
Project : **Solutia Landfill Closure, AL**

We, the Geonet Manufacturer, hereby certify the following for the material sent to the above referenced project :

Geonet Roll Number	Resin Lot Number	Geonet Density (gm/cc)	Thickness (mils)	Carbon Black (%)	Tensile Strength (MD) (lb/in)	Transmissivity (m^2/sec)
66381010028 - N	ECUX 881012	0.9572				
66381010029 - N	ECUX 881012	0.9572				
66381010030 - N	ECUX 881012	0.9575	236	2.34	57	
66381010031 - N	ECUX 881012	0.9575				
66381010032 - N	ECUX 881012	0.9575				
66381010033 - N	ECUX 881012	0.9575				
66381010034 - N	ECUX 881012	0.9575				
66381010035 - N	ECUX 881012	0.9578	225	2.23	53	
66381010036 - N	ECUX 881012	0.9578				
66381010037 - N	ECUX 881012	0.9578				
66381010038 - N	ECUX 881012	0.9578				
66381010039 - N	ECUX 881012	0.9578				
66381010040 - N	ECUX 881012	0.9576	237	2.31	55	
66381010041 - N	ECUX 881012	0.9576				
66381010042 - N	ECUX 881012	0.9576				
66381010043 - N	ECUX 881012	0.9576				
66381010044 - N	ECUX 881012	0.9576				
66381010045 - N	ECUX 881012	0.9577	233	2.67	58	
66381010046 - N	ECUX 881012	0.9577				
66381010047 - N	ECUX 881012	0.9577				
66381010048 - N	ECUX 881012	0.9577				
66381010049 - N	ECUX 881012	0.9577				
66381010050 - N	ECUX 881012	0.9573	230	2.39	54	
66381010051 - N	ECUX 881012	0.9573				
66381010052 - N	ECUX 881012	0.9573				
66381010053 - N	ECUX 881012	0.9573				
66381010054 - N	ECUX 881012	0.9573				

571 Industrial Parkway, Commerce, GA 30529 Ph : 706-336-7000 Fax : 706-336-7007 Email : contact@skaps.com

Product : **TN 240-2-8**
Project : **Solutia Landfill Closure, AL**

We, the Geocomposite Manufacturer, hereby certify the following for the material delivered to the above referenced project :

Roll	Geocomposite Roll Number	Geonet Roll Number	Geotextile Roll Number		Ply Adhesion (lb/in)		Geocomposite Transmissivity (m^2/sec)
			Side A	Side B	Minimum	Average	
55	66381010055	66381010055 - N	6638.042	6638.034			
56	66381010056	66381010056 - N	6638.049	6638.043			
57	66381010057	66381010057 - N	6638.049	6638.043			
58	66381010058	66381010058 - N	6638.049	6638.043			
59	66381010059	66381010059 - N	6638.049	6638.043			
60	66381010060	66381010060 - N	6638.049	6638.043	1.34	1.99	4.04×10^{-4}
61	66381010061	66381010061 - N	6638.013	6638.004			
62	66381010062	66381010062 - N	6638.013	6638.004			
63	66381010063	66381010063 - N	6638.013	6638.004			
64	66381010064	66381010064 - N	6638.013	6638.004			
65	66381010065	66381010065 - N	6638.013	6638.004			
66	66381010066	66381010066 - N	6638.046	6638.026			
67	66381010067	66381010067 - N	6638.046	6638.026			
68	66381010068	66381010068 - N	6638.046	6638.026			
69	66381010069	66381010069 - N	6638.046	6638.026			
70	66381010070	66381010070 - N	6638.046	6638.026	1.24	1.92	
71	66381010071	66381010071 - N	6638.015	6638.071			
72	66381010072	66381010072 - N	6638.015	6638.071			
73	66381010073	66381010073 - N	6638.015	6638.071			
74	66381010074	66381010074 - N	6638.015	6638.071			
75	66381010075	66381010075 - N	6638.015	6638.071			
76	66381010076	66381010076 - N	6638.058	6638.027			
77	66381010077	66381010077 - N	6638.058	6638.027			
78	66381010078	66381010078 - N	6638.058	6638.027			
79	66381010079	66381010079 - N	6638.058	6638.027			
80	66381010080	66381010080 - N	6638.058	6638.027	1.32	2.00	
81	66381010081	66381010081 - N	6638.037	6638.018			

571 Industrial Parkway, Commerce, GA 30529 Ph : 706-336-7000 Fax : 706-336-7007 Email : contact@skaps.com

Product : **TN 240-2-8**
Project : **Solutia Landfill Closure, AL**

We, the Geonet Manufacturer, hereby certify the following for the material sent to the above referenced project :

Geonet Roll Number	Resin Lot Number	Geonet Density (gm/cc)	Thickness (mils)	Carbon Black (%)	Tensile Strength (MD) (lb/in)	Transmissivity (m^2/sec)
66381010055 - N	ECUX 881012	0.9580	227	2.74	59	
66381010056 - N	ECUX 881012	0.9580				
66381010057 - N	ECUX 881012	0.9580				
66381010058 - N	ECUX 881012	0.9580				
66381010059 - N	ECUX 881012	0.9580				
66381010060 - N	ECUX 881012	0.9573	229	2.61	51	
66381010061 - N	ECUX 881012	0.9573				
66381010062 - N	ECUX 881012	0.9573				
66381010063 - N	ECUX 881012	0.9573				
66381010064 - N	ECUX 881012	0.9573				
66381010065 - N	ECUX 881012	0.9579	231	2.26	53	
66381010066 - N	ECUX 881012	0.9579				
66381010067 - N	ECUX 881012	0.9579				
66381010068 - N	ECUX 881012	0.9579				
66381010069 - N	ECUX 881012	0.9579				
66381010070 - N	ECUX 881012	0.9572	228	2.24	58	
66381010071 - N	ECUX 881012	0.9572				
66381010072 - N	ECUX 881012	0.9572				
66381010073 - N	ECUX 881012	0.9572				
66381010074 - N	ECUX 881012	0.9572				
66381010075 - N	ECUX 881012	0.9578	225	2.61	51	
66381010076 - N	ECUX 881012	0.9578				
66381010077 - N	ECUX 881012	0.9578				
66381010078 - N	ECUX 881012	0.9578				
66381010079 - N	ECUX 881012	0.9578				
66381010080 - N	ECUX 881012	0.9576	227	2.75	54	
66381010081 - N	ECUX 881012	0.9576				

571 Industrial Parkway, Commerce, GA 30529 Ph : 706-336-7000 Fax : 706-336-7007 Email : contact@skaps.com

Product : **TN 240-2-8**
Project : **Solutia Landfill Closure, AL**

We, the Geocomposite Manufacturer, hereby certify the following for the material delivered to the above referenced project :

Roll	Geocomposite Roll Number	Geonet Roll Number	Geotextile Roll Number		Ply Adhesion (lb/in)		Geocomposite Transmissivity (m^2/sec)
			Side A	Side B	Minimum	Average	
82	66381010082	66381010082 - N	6638.037	6638.018			
83	66381010083	66381010083 - N	6638.037	6638.018			
84	66381010084	66381010084 - N	6638.037	6638.018			
85	66381010085	66381010085 - N	6638.037	6638.018			
86	66381010086	66381010086 - N	6638.017	6638.040			
87	66381010087	66381010087 - N	6638.017	6638.040			
88	66381010088	66381010088 - N	6638.017	6638.040			
89	66381010089	66381010089 - N	6638.017	6638.040			
90	66381010090	66381010090 - N	6638.017	6638.040	1.26	2.49	
91	66381010091	66381010091 - N	6638.065	6638.024			
92	66381010092	66381010092 - N	6638.065	6638.024			
93	66381010093	66381010093 - N	6638.065	6638.024			
94	66381010094	66381010094 - N	6638.065	6638.024			
95	66381010095	66381010095 - N	6638.065	6638.024			
96	66381010096	66381010096 - N	6638.005	6638.033			
97	66381010097	66381010097 - N	6638.005	6638.033			
98	66381010098	66381010098 - N	6638.005	6638.033			
99	66381010099	66381010099 - N	6638.005	6638.033			
100	66381010100	66381010100 - N	6638.005	6638.033	1.45	2.16	
101	66381010101	66381010101 - N	6638.014	6638.056			
102	66381010102	66381010102 - N	6638.014	6638.056			
103	66381010103	66381010103 - N	6638.014	6638.056			
104	66381010104	66381010104 - N	6638.014	6638.056			
105	66381010105	66381010105 - N	6638.014	6638.056			
106	66381010106	66381010106 - N	6638.064	6638.059			
107	66381010107	66381010107 - N	6638.064	6638.059			
108	66381010108	66381010108 - N	6638.064	6638.059			

571 Industrial Parkway, Commerce, GA 30529 Ph : 706-336-7000 Fax : 706-336-7007 Email : contact@skaps.com

Product : **TN 240-2-8**
Project : **Solutia Landfill Closure, AL**

We, the Geonet Manufacturer, hereby certify the following for the material sent to the above referenced project :

Geonet Roll Number	Resin Lot Number	Geonet Density (gm/cc)	Thickness (mils)	Carbon Black (%)	Tensile Strength (MD) (lb/in)	Transmissivity (m^2/sec)
66381010082 - N	ECUX 881012	0.9576				
66381010083 - N	ECUX 881012	0.9576				
66381010084 - N	ECUX 881012	0.9576				
66381010085 - N	ECUX 881012	0.9574	232	2.54	57	
66381010086 - N	ECUX 881012	0.9574				
66381010087 - N	ECUX 881012	0.9574				
66381010088 - N	ECUX 881012	0.9574				
66381010089 - N	ECUX 881012	0.9574				
66381010090 - N	ECUX 881012	0.9577	235	2.76	55	
66381010091 - N	ECUX 881012	0.9577				
66381010092 - N	ECUX 881012	0.9577				
66381010093 - N	ECUX 881012	0.9577				
66381010094 - N	ECUX 881012	0.9577				
66381010095 - N	ECUX 881012	0.9575	226	2.68	56	
66381010096 - N	ECUX 881012	0.9575				
66381010097 - N	ECUX 881012	0.9575				
66381010098 - N	ECUX 881012	0.9575				
66381010099 - N	ECUX 881012	0.9575				
66381010100 - N	ECUX 881012	0.9580	233	2.71	52	
66381010101 - N	ECUX 881012	0.9580				
66381010102 - N	ECUX 881012	0.9580				
66381010103 - N	ECUX 881012	0.9580				
66381010104 - N	ECUX 881012	0.9580				
66381010105 - N	ECUX 881012	0.9577	236	2.38	59	
66381010106 - N	ECUX 881012	0.9577				
66381010107 - N	ECUX 881012	0.9577				
66381010108 - N	ECUX 881012	0.9577				

571 Industrial Parkway, Commerce, GA 30529 Ph : 706-336-7000 Fax : 706-336-7007 Email : contact@skaps.com

Product : **TN 240-2-8**
Project : **Solutia Landfill Closure, AL**

We, the Geocomposite Manufacturer, hereby certify the following for the material delivered to the above referenced project :

Roll	Geocomposite Roll Number	Geonet Roll Number	Geotextile Roll Number		Ply Adhesion (lb/in)		Geocomposite Transmissivity (m^2/sec)
			Side A	Side B	Minimum	Average	
109	66381010109	66381010109 - N	6638.064	6638.059			
110	66381010110	66381010110 - N	6638.064	6638.059	1.38	2.36	
111	66381010111	66381010111 - N	6638.011	6638.028			
112	66381010112	66381010112 - N	6638.011	6638.028			
113	66381010113	66381010113 - N	6638.011	6638.028			
114	66381010114	66381010114 - N	6638.011	6638.028			
115	66381010115	66381010115 - N	6638.011	6638.028			
116	66381010116	66381010116 - N	6638.023	6638.072			
117	66381010117	66381010117 - N	6638.023	6638.072			
118	66381010118	66381010118 - N	6638.023	6638.072			
119	66381010119	66381010119 - N	6638.023	6638.072			
120	66381010120	66381010120 - N	6638.023	6638.072	1.47	1.84	4.55×10^{-4}
121	66381010121	66381010121 - N	6638.038	6638.022			
122	66381010122	66381010122 - N	6638.038	6638.022			
123	66381010123	66381010123 - N	6638.038	6638.022			
124	66381010124	66381010124 - N	6638.038	6638.022			
125	66381010125	66381010125 - N	6638.038	6638.022			
126	66381010126	66381010126 - N	6638.019	6638.070			
127	66381010127	66381010127 - N	6638.019	6638.070			
128	66381010128	66381010128 - N	6638.019	6638.070			
129	66381010129	66381010129 - N	6638.019	6638.070			
130	66381010130	66381010130 - N	6638.019	6638.070	1.62	2.44	
131	66381010131	66381010131 - N	6638.039	6638.031			
132	66381010132	66381010132 - N	6638.039	6638.031			
133	66381010133	66381010133 - N	6638.039	6638.031			
134	66381010134	66381010134 - N	6638.039	6638.031			
135	66381010135	66381010135 - N	6638.039	6638.031			

571 Industrial Parkway, Commerce, GA 30529 Ph : 706-336-7000 Fax : 706-336-7007 Email : contact@skaps.com

Product : **TN 240-2-8**
Project : **Solutia Landfill Closure, AL**

We, the Geonet Manufacturer, hereby certify the following for the material sent to the above referenced project :

Geonet Roll Number	Resin Lot Number	Geonet Density (gm/cc)	Thickness (mils)	Carbon Black (%)	Tensile Strength (MD) (lb/in)	Transmissivity (m^2/sec)
66381010109 - N	ECUX 881012	0.9577				
66381010110 - N	ECUX 881012	0.9579	229	2.35	52	
66381010111 - N	ECUX 881012	0.9579				
66381010112 - N	ECUX 881012	0.9579				
66381010113 - N	ECUX 881012	0.9579				
66381010114 - N	ECUX 881012	0.9579				
66381010115 - N	ECUX 881012	0.9573	234	2.33	58	
66381010116 - N	ECUX 881012	0.9573				
66381010117 - N	ECUX 881012	0.9573				
66381010118 - N	ECUX 881012	0.9573				
66381010119 - N	ECUX 881012	0.9573				
66381010120 - N	ECUX 881012	0.9580	237	2.50	51	
66381010121 - N	ECUX 881012	0.9580				
66381010122 - N	ECUX 881012	0.9580				
66381010123 - N	ECUX 881012	0.9580				
66381010124 - N	ECUX 881012	0.9580				
66381010125 - N	ECUX 881012	0.9574	230	2.48	57	
66381010126 - N	ECUX 881012	0.9574				
66381010127 - N	ECUX 881012	0.9574				
66381010128 - N	ECUX 881012	0.9574				
66381010129 - N	ECUX 881012	0.9574				
66381010130 - N	ECUX 881012	0.9576	228	2.40	55	
66381010131 - N	ECUX 881012	0.9576				
66381010132 - N	ECUX 881012	0.9576				
66381010133 - N	ECUX 881012	0.9576				
66381010134 - N	ECUX 881012	0.9576				
66381010135 - N	ECUX 881012	0.9578	225	2.59	53	

571 Industrial Parkway, Commerce, GA 30529 Ph : 706-336-7000 Fax : 706-336-7007 Email : contact@skaps.com

Product : **TN 240-2-8**
Project : **Solutia Landfill Closure, AL**

We, the Geocomposite Manufacturer, hereby certify the following for the material delivered to the above referenced project :

Roll	Geocomposite Roll Number	Geonet Roll Number	Geotextile Roll Number		Ply Adhesion (lb/in)		Geocomposite Transmissivity (m^2/sec)
			Side A	Side B	Minimum	Average	
136	66381010136	66381010136 - N	6638.008	6638.061			
137	66381010137	66381010137 - N	6638.008	6638.061			
138	66381010138	66381010138 - N	6638.008	6638.061			
139	66381010139	66381010139 - N	6638.008	6638.061			
140	66381010140	66381010140 - N	6638.008	6638.061	1.48	2.18	
141	66381010141	66381010141 - N	6638.063	6638.007			
142	66381010142	66381010142 - N	6638.063	6638.007			
143	66381010143	66381010143 - N	6638.063	6638.007			
144	66381010144	66381010144 - N	6638.063	6638.007			
145	66381010145	66381010145 - N	6638.063	6638.007			
146	66381010146	66381010146 - N	6638.057	6638.052			
147	66381010147	66381010147 - N	6638.057	6638.052			
148	66381010148	66381010148 - N	6638.057	6638.052			
149	66381010149	66381010149 - N	6638.057	6638.052			
150	66381010150	66381010150 - N	6638.057	6638.052	1.56	1.95	
151	66381010151	66381010151 - N	6638.060	6638.055			
152	66381010152	66381010152 - N	6638.060	6638.055			
153	66381010153	66381010153 - N	6638.060	6638.055			
154	66381010154	66381010154 - N	6638.060	6638.055			
155	66381010155	66381010155 - N	6638.060	6638.055			
156	66381010156	66381010156 - N	6638.003	6638.053			
157	66381010157	66381010157 - N	6638.003	6638.053			
158	66381010158	66381010158 - N	6638.003	6638.053			
159	66381010159	66381010159 - N	6638.003	6638.053			
160	66381010160	66381010160 - N	6638.003	6638.053	1.44	2.32	
161	66381010161	66381010161 - N	6638.016	6638.068			
162	66381010162	66381010162 - N	6638.016	6638.068			

571 Industrial Parkway, Commerce, GA 30529 Ph : 706-336-7000 Fax : 706-336-7007 Email : contact@skaps.com

Product : **TN 240-2-8**
Project : **Solutia Landfill Closure, AL**

We, the Geonet Manufacturer, hereby certify the following for the material sent to the above referenced project :

Geonet Roll Number	Resin Lot Number	Geonet Density (gm/cc)	Thickness (mils)	Carbon Black (%)	Tensile Strength (MD) (lb/in)	Transmissivity (m^2/sec)
66381010136 - N	ECUX 881012	0.9578				
66381010137 - N	ECUX 881012	0.9578				
66381010138 - N	ECUX 881012	0.9578				
66381010139 - N	ECUX 881012	0.9578				
66381010140 - N	ECUX 881012	0.9575	227	2.65	56	
66381010141 - N	ECUX 881012	0.9575				
66381010142 - N	ECUX 881012	0.9575				
66381010143 - N	ECUX 881012	0.9575				
66381010144 - N	ECUX 881012	0.9575				
66381010145 - N	ECUX 881012	0.9573	235	2.60	54	
66381010146 - N	ECUX 881012	0.9573				
66381010147 - N	ECUX 881012	0.9573				
66381010148 - N	ECUX 881012	0.9573				
66381010149 - N	ECUX 881012	0.9573				
66381010150 - N	ECUX 881012	0.9577	226	2.46	59	
66381010151 - N	ECUX 881012	0.9577				
66381010152 - N	ECUX 881012	0.9577				
66381010153 - N	ECUX 881012	0.9577				
66381010154 - N	ECUX 881012	0.9577				
66381010155 - N	ECUX 881012	0.9575	237	2.32	56	
66381010156 - N	ECUX 881012	0.9575				
66381010157 - N	ECUX 881012	0.9575				
66381010158 - N	ECUX 881012	0.9575				
66381010159 - N	ECUX 881012	0.9575				
66381010160 - N	ECUX 881012	0.9572	231	2.73	52	
66381010161 - N	ECUX 881012	0.9572				
66381010162 - N	ECUX 881012	0.9572				

571 Industrial Parkway, Commerce, GA 30529 Ph : 706-336-7000 Fax : 706-336-7007 Email : contact@skaps.com

Product : **TN 240-2-8**
Project : **Solutia Landfill Closure, AL**

We, the Geocomposite Manufacturer, hereby certify the following for the material delivered to the above referenced project :

Roll	Geocomposite Roll Number	Geonet Roll Number	Geotextile Roll Number		Ply Adhesion (lb/in)		Geocomposite Transmissivity (m^2/sec)
			Side A	Side B	Minimum	Average	
163	66381010163	66381010163 - N	6638.016	6638.068			
164	66381010164	66381010164 - N	6638.016	6638.068			
165	66381010165	66381010165 - N	6638.016	6638.068			
166	66381010166	66381010166 - N	6638.029	6638.047			
167	66381010167	66381010167 - N	6638.029	6638.047			
168	66381010168	66381010168 - N	6638.029	6638.047			
169	66381010169	66381010169 - N	6638.029	6638.047			
170	66381010170	66381010170 - N	6638.029	6638.047	1.27	2.28	
171	66381010171	66381010171 - N	6638.010	6638.012			
172	66381010172	66381010172 - N	6638.010	6638.012			
173	66381010173	66381010173 - N	6638.010	6638.012			
174	66381010174	66381010174 - N	6638.010	6638.012			
175	66381010175	66381010175 - N	6638.010	6638.012			
176	66381010176	66381010176 - N	6638.067	6638.036			
177	66381010177	66381010177 - N	6638.067	6638.036			
178	66381010178	66381010178 - N	6638.067	6638.036			
179	66381010179	66381010179 - N	6638.067	6638.036			

571 Industrial Parkway, Commerce, GA 30529 Ph : 706-336-7000 Fax : 706-336-7007 Email : contact@skaps.com

Product : **TN 240-2-8**
Project : **Solutia Landfill Closure, AL**

We, the Geonet Manufacturer, hereby certify the following for the material sent to the above referenced project :

Geonet Roll Number	Resin Lot Number	Geonet Density (gm/cc)	Thickness (mils)	Carbon Black (%)	Tensile Strength (MD) (lb/in)	Transmissivity (m^2/sec)
66381010163 - N	ECUX 881012	0.9572				
66381010164 - N	ECUX 881012	0.9572				
66381010165 - N	ECUX 881012	0.9580	236	2.72	54	
66381010166 - N	ECUX 881012	0.9580				
66381010167 - N	ECUX 881012	0.9580				
66381010168 - N	ECUX 881012	0.9580				
66381010169 - N	ECUX 881012	0.9580				
66381010170 - N	ECUX 881012	0.9579	230	2.44	57	
66381010171 - N	ECUX 881012	0.9579				
66381010172 - N	ECUX 881012	0.9579				
66381010173 - N	ECUX 881012	0.9579				
66381010174 - N	ECUX 881012	0.9579				
66381010175 - N	ECUX 881012	0.9576	232	2.47	55	
66381010176 - N	ECUX 881012	0.9576				
66381010177 - N	ECUX 881012	0.9576				
66381010178 - N	ECUX 881012	0.9576				
66381010179 - N	ECUX 881012	0.9576				

571 Industrial Parkway, Commerce, GA 30529 Ph : 706-336-7000 Fax : 706-336-7007 Email : contact@skaps.com

ASTM D 4716

Client:	Plastic Fusion Fabricators, Inc.	**Job #**	6638
Project:	Solutia Landfill Closure, AL		
Product:	TN 240-2-8		

Test Configuration:

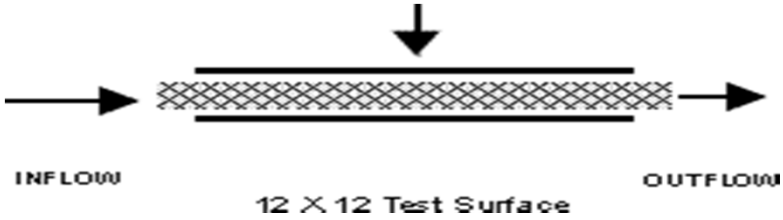

Test Information:

Boundary Conditions:	Ottawa Sand Geocomposite Geomembrane	**Normal Load:** **Gradient:** **Seating Time:** **Flow Direction:**	250 0.1 100 hours MD

Test Results:

Roll No.	Pressure, psf	Gradient	Transmissivity, m^2/sec
			100 hours
66381010001	250	0.1	3.96×10^{-4}
66381010060			4.04×10^{-4}
66381010120			4.55×10^{-4}

571 Industrial Parkway, Commerce, GA 30529 Ph : 706-336-7000 Fax : 706-336-7007 Email : contact@skaps.com

POLYETHYLENE RESIN CERTIFICATION

Customer Name : Plastic Fusion Fabricators, Inc.
Project Name : Solutia Landfill Closure, AL
Geocomposite Manufacturer : SKAPS Industries
Geocomposite Production Plant : Commerce, GA
Geocomposite Brand Name : TN 240-2-8

We, the Geonet Manufacturer, hereby certify the following for the material delivered to the above referenced project:

Resin Supplier	Resin Production Plant	Resin Brand Name	Resin Lot Number	Property	Test Method	Units	Resin Supplier Value	Tested Value*
M. Holland & Company	Chevron, TX	HDPE	ECUX 881012	Density	ASTM D1505	gm / cc	0.9530	0.9527
				Melt flow Index	ASTM D1238[(a)]	gm / 10 min	0.25	0.22

* No reclaimed polymer is added to the resin during the manufacture of the geonet components assigned to this project.

(a) Condition 190/2.16
* Data from SKAPS Quality Control

571 Industrial Parkway, Commerce, GA 30529 Ph : 706-336-7000 Fax : 706-336-7007 Email : contact@skaps.com

Product : **TN 240-2-8**
Project : **Solutia Landfill Closure, AL**

We, the Geocomposite Manufacturer, hereby certify the following for the material delivered to the above referenced project :

GEOCOMP ROLL#	FABRIC ROLL#	WEIGHT oz/yd²	MD TENSILE lbs.	MD ELONG %	XMD TENSILE lbs.	XMD ELONG %	CBR PUNCTURE lbs.	AOS us sieve
66381010001	6638.050	8.16	228	65	243	77	693	80
	6638.062	8.42	230	75	233	78	676	80
66381010025	6638.069	8.33	226	69	230	82	673	80
	6638.051	8.16	228	65	243	77	693	80
66381010050	6638.021	8.13	233	72	239	76	679	80
	6638.002	8.50	227	69	231	83	691	80
66381010075	6638.015	8.58	231	68	245	79	666	80
	6638.071	8.60	231	67	242	76	659	80
66381010100	6638.005	8.44	232	66	236	80	658	80
	6638.033	8.54	229	75	232	81	660	80
66381010125	6638.038	8.57	234	73	238	75	683	80
	6638.022	8.13	233	72	239	76	679	80
66381010150	6638.057	8.27	233	72	237	84	688	80
	6638.052	8.16	228	65	243	77	693	80
66381010175	6638.010	8.26	225	71	234	85	700	80
	6638.012	8.26	225	71	234	85	700	80

571 Industrial Parkway, Commerce, GA 30529 Ph : 706-336-7000 Fax : 706-336-7007 Email : contact@skaps.com

APPENDIX G2.2

Quality Assurance Test Results

TABLE 1 - SUMMARY OF GEOCOMPOSITE CONFORMANCE TEST RESULTS

SOLUTIA
ONSITE OU-3 RA CONSTRUCTION
ALABAMA

ROLL DESIGNATION	REFERENCE VALUE	66381-0001	66381-0031	66381-0060	66381-0090	66381-0119	66381-0149	-	-	-	-
THICKNESS (mils)											
ASTM D5199	-	322	325	327	311	320	323	-	-	-	-
ADHESION STRENGTH											
(ppi)	>=1.0	3.4	2.8	3.1	4.3	4.2	4.2	-	-	-	-
ASTM D7005	>=1.0	5.1	3.7	4.9	5.4	4.7	4.7	-	-	-	-
TRANSMISSIVITY											
(m^2/sec) (1)	>=1E-04	9.0E-04	1.4E-03	5.7E-04	9.5E-04	1.2E-03	1.2E-03	-	-	-	-
ASTM D4716				(2)							

GC-SUM.XLS

(1) Pressure - 250 psf, Gradient - 0.1, 15 minute seating time, between two rigid plates.
(2) Pressure - 250 psf, Gradient - 0.1, 100-hour seating time, between two rigid plates.

TABLE 2

AUGUST 2015

SUMMARY OF GEOTEXTILE (Geocomposite)
CONFORMANCE TEST RESULTS
SOLUTIA
ONSITE OU-3 RA CONSTRUCTION
ALABAMA

1302962-CQA

ROLL DESIGNATION	REFERENCE VALUE	66381-0001A	66381-0001B	66381-0031A	66381-0031B	66381-0060A	66381-0060B	66381-0090A	66381-0090B	66381-0119A	66381-0119B
MASS PER UNIT AREA (oz/yd^2) ASTM D5261	>=8	9.0	8.8	8.4	8.3	9.1	8.8	9.3	9.0	9.3	8.8
PUNCTURE STRENGTH (lbs) ASTM D6241	>=425	802	800	815	806	773	768	780	812	780	786
GRAB STRENGTH (lbs)											
MD/TD (1)	>=205	252	240	249	254	255	244	252	264	251	238
ASTM D4632	>=205	276	260	268	246	259	239	254	256	253	241
GRAB ELONGATION (%)											
MD/TD (1)	-	53	65	58	60	58	56	57	57	53	50
ASTM D4632	-	105	94	93	80	80	81	81	81	77	76

(1) MD/TD corresponds to Machine Direction / Transverse Direction.

TEXTSUM.XLS

TABLE 2

AUGUST 2015

SUMMARY OF GEOTEXTILE (Geocomposite)
CONFORMANCE TEST RESULTS

SOLUTIA
ONSITE OU-3 RA CONSTRUCTION
ALABAMA

1302962-CQA

ROLL DESIGNATION	REFERENCE VALUE	66381-0149A	66381-0149B	-	-	-	-	-	-	-
MASS PER UNIT AREA (oz/yd^2) ASTM D5261	>=8	9.0	8.9	-	-	-	-	-	-	-
PUNCTURE STRENGTH (lbs) ASTM D6241	>=425	800	793	-	-	-	-	-	-	-
GRAB STRENGTH (lbs)										
MD/TD (1)	>=205	265	254	-	-	-	-	-	-	-
ASTM D4632	>=205	237	242	-	-	-	-	-	-	-
GRAB ELONGATION (%)										
MD/TD (1)	-	53	53	-	-	-	-	-	-	-
ASTM D4632	-	75	75	-	-	-	-	-	-	-

(1) MD/TD corresponds to Machine Direction / Transverse Direction.

APPENDIX H

GEOMEMBRANE CQA TESTING

APPENDIX H1

Area A

APPENDIX H1.1

Panel Deployment Logs

GEOSYNTHETIC PANEL DEPLOYMENT LOG

PROJECT NUMBER: 130 2962CQA **PROJECT TITLE:** OU3 RA Construction
OWNER: Solutia **CONTRACTOR:** Taylor
LOCATION: Anniston AL

GEOMEMBRANE: Secondary Primary **Closure** Other:
SUBGRADE CONDITION: (**Surface Compaction** Protrusions Dessiccation Excessive Moisture)
REMARKS:

TRANSPORT EQUIPMENT: **Loader**

PANEL #	ROLL NUMBER	DEPLY'D LENGTH	AMBIENT AIR TEMP	OBS'D OVERLAP	MONITOR	REMARKS
A1	**3103**	**328**	**74**	**Yes**	**SC**	
A2	**3103**	**85**	**74**	**Yes**	**SC**	
A3	**3103**	**86**	**74**	**Yes**	**SC**	
A4	**3103**	**89**	**74**	**Yes**	**SC**	
A5	**3103**	**86**	**74**	**Yes**	**SC**	
A6	**3105**	**87**	**74**	**Yes**	**SC**	
A7	**3105**	**82**	**74**	**Yes**	**SC**	
A8	**3105**	**278**	**75**	**Yes**	**SC**	
A9	**3105**	**248**	**75**	**Yes**	**SC**	
A10	**3101**	**82**	**75**	**Yes**	**SC**	
A11	**3101**	**323**	**75**	**Yes**	**SC**	
A12	**3101**	**293**	**75**	**Yes**	**SC**	
A13	**3074**	**38**	**75**	**Yes**	**SC**	

Golder Form: G2-TSS **REVIEWED BY:** **KMG** **DATE:** **3/17/2016**

(August 2000)

GOLDER ASSOCIATES INC.

GEOSYNTHETIC PANEL DEPLOYMENT LOG

PROJECT NUMBER: 130 2962CQA **PROJECT TITLE:** OU3 RA Construction
OWNER: Solutia **CONTRACTOR:** Taylor
LOCATION: Anniston AL

GEOMEMBRANE: Secondary Primary **Closure** Other:
SUBGRADE CONDITION: (**Surface Compaction** Protrusions Dessiccation Excessive Moisture)
REMARKS:

TRANSPORT EQUIPMENT: **Loader**

PANEL #	ROLL NUMBER	DEPLY'D LENGTH	AMBIENT AIR TEMP	OBS'D OVERLAP	MONITOR	REMARKS
A14	**3074**	**328**	**46**	**Yes**	**SC**	3/17/2016
A15	**3074**	**329**	**46**	**Yes**	**SC**	
A16	**3088**	**332**	**48**	**Yes**	**SC**	
A17	**3088**	**332**	**48**	**Yes**	**SC**	
A18	**3072**	**336**	**56**	**Yes**	**SC**	
A19	**3072**	**336**	**56**	**Yes**	**SC**	
A20	**3073**	**338**	**65**	**Yes**	**SC**	
A21	**3073**	**52**	**65**	**Yes**	**SC**	
A22	**3073**	**33**	**65**	**Yes**	**SC**	
A23	**3073**	**256**	**73**	**Yes**	**SC**	
A24	**3077**	**336**	**73**	**Yes**	**SC**	
A25	**3077**	**336**	**73**	**Yes**	**SC**	

Golder Form: G2-TSS
(August 2000)

REVIEWED BY: KMG **DATE:** 3/17/2016

GOLDER ASSOCIATES INC.

GEOSYNTHETIC PANEL DEPLOYMENT LOG

PROJECT NUMBER: 130 2962CQA **PROJECT TITLE:** OU3 RA Construction
OWNER: Solutia **CONTRACTOR:** Taylor
LOCATION: Anniston AL

GEOMEMBRANE: Secondary Primary **Closure** Other:
SUBGRADE CONDITION: (Surface Compaction Protrusions Dessiccation Excessive Moisture)
REMARKS: Area A

TRANSPORT EQUIPMENT: **Loader**

PANEL #	ROLL NUMBER	DEPLY'D LENGTH	AMBIENT AIR TEMP	OBS'D OVERLAP	MONITOR	REMARKS
A26	**3069**	**331**	**48**	**Yes**	**SC**	
A27	**3069**	**331**	**48**	**Yes**	**SC**	
A28	**3084**	**326**	**52**	**Yes**	**SC**	
A29	**3084**	**326**	**52**	**Yes**	**SC**	
A30	**3075**	**324**	**53**	**Yes**	**SC**	
A31	**3075**	**315**	**53**	**Yes**	**SC**	
A32	**3098**	**293**	**56**	**Yes**	**SC**	
A33	**3098**	**29**	**56**	**Yes**	**SC**	

Golder Form: G2-TSS
(August 2000)

REVIEWED BY: **KMG** **DATE:** **3/22/2016**

GOLDER ASSOCIATES INC.

APPENDIX H1.2

Geomembrane Seam Logs

GEOMEMBRANE SEAM LOG

PROJECT NUMBER: 130 2962CQA
PROJECT TITLE: OU3 RA Construction
OWNER: Solutia AL
LOCATION: Anniston AL
CONTRACTOR: Taylor

[x] FUSION
[ ] EXTRUSION

PASSING TRIAL SEAMS

NO.	TIME	TECH ID
TF02	1245	AM

DESTRUCTIVE LENGTH CARRY-OVER FROM PREVIOUS LOG: 0

DATE: 3/16/2016
SHEET NUMBER: 1/1
MACHINE #: 454

	SEAM NUMBER	SEAM SECTION* START POINT	SEAM SECTION* FINISH POINT	APPROX. START TIME	AMB. AIR TEMP.	WELD TECH.	PREHEAT OR MACH. SPEED	MACHINE TEMPERATURES DIGITAL SET WEDGE OR BARREL NOZZLE	MACHINE TEMPERATURES INDICATOR WEDGE OR BARREL NOZZLE	APPROX. LENGTH WELDED	LENGTH FROM PREVIOUS DESTR.	DESTR. NUMBER	MON.	REMARKS	** NON-DESTRUCTIVE TEST DATE	** NON-DESTRUCTIVE MON.
1	A2 / A3	WEEOS -	EEOS	1310	75	AM	6.5	385 -	-	83	83		SC		3/16/2016	SC
2	A6 / A5	WEEOS -	EEOS	1323	75	AM	6.5	385 -	-	82	88/77	DSF2	SC	1D	3/16/2016	SC
3	A6 / A7	WEEOS -	EEOS	1335	75	AM	6.5	385 -	-	79	156		SC		3/16/2016	SC
4	A9 / A10	NEOS -	SEOS	1428	75	AM	6.5	385 -	-	22	178		SC		3/16/2016	SC
5	A8 / A10	WEEOS -	EEOS	1442	75	AM	6.5	385 -	-	16	194		SC		3/16/2016	SC
6	A8 / A9	WEEOS -	EEOS	1448	75	AM	6.5	385 -	-	246	440		SC		3/16/2016	SC
7	A12 / A13	NEOS -	SEOS	1540	75	AM	6.5	385 -	-	22	462		SC		3/16/2016	SC
8	A11 / A13	WEEOS -	EEOS	1546	75	AM	6.5	385 -	-	35	497		SC		3/16/2016	SC
9	A11 / A12	NEOS -	SEOS	1556	75	AM	6.5	385 -	-	288	500/285	DSF4	SC	1J	3/16/2016	SC
10	/	-						-	-							
11	/	-						-	-							
12	/	-						-	-							
13	/	-						-	-							
14	/	-						-	-							
15	/	-						-	-							
16	/	-						-	-							
17	/	-						-	-							
								DAILY TOTAL		873						
								DESTRUCTIVE LENGTH CARRY-OVER			285					

* REFERENCE SEAM ENDPOINTS FROM AN END OF SEAM (EOS), A REPAIR NUMBER, OR A POINT LOCATION ON THE SEAM.

** COLUMNS TO BE USED BY THE DATA REVIEWER ONLY

GCS FORM: G13
(JUNE 1992)

REVIEWED BY: KMG
DATE: 3/17/2016

GOLDER ASSOCIATES

GEOMEMBRANE SEAM LOG

PROJECT NUMBER: 130 2962CQA
PROJECT TITLE: OU3 RA Construction
OWNER: Solutia AL
LOCATION: Anniston AL
CONTRACTOR: Taylor

[x] FUSION
[ ] EXTRUSION

PASSING TRIAL SEAMS

NO.	TIME	TECH ID
TF02	727	AM
TF04	1303	AM
TF05	1354	AM

DESTRUCTIVE LENGTH CARRY-OVER FROM PREVIOUS LOG: 285

DATE: 3/17/2016
SHEET NUMBER: 1/1
MACHINE # _ 454

	SEAM NUMBER	SEAM SECTION* START POINT	SEAM SECTION* FINISH POINT	APPROX. START TIME	AMB. AIR TEMP.	WELD TECH.	PREHEAT OR MACH. SPEED	MACHINE TEMPERATURES DIGITAL SET WEDGE OR BARREL	MACHINE TEMPERATURES INDICATOR WEDGE OR BARREL NOZZLE	APPROX. LENGTH WELDED	LENGTH FROM PREVIOUS DESTR.	DESTR. NUMBER	MON.	REMARKS	** NON-DESTRUCTIVE TEST DATE	** NON-DESTRUCTIVE MON.
1	A11 / A15	WEEOS -	EEOS	815	48	AM	6.5	385 -	-	326	500/111	DSF6	SC	1N	3/17/2016	SC
2	A16 / A17	WEEOS -	EEOS	900	48	AM	6.5	385 -	-	331	442		SC		3/17/2016	SC
3	A18 / A19	WEEOS -	EEOS	1002	56	AM	6.5	385 -	-	334	500/276	DSF8	SC	1Q	3/17/2016	SC
4	A20 / A23	NEOS -	SEOS	1323	73	AM	6.5	385 -	-	254	500/30	DSF10	SC	1W	3/17/2016	SC
5	A20 / A22	WEEOS -	IX	1415	73	AM	6.5	385 -	-	7	37		SC		3/17/2016	SC
6	A24 / A25	WEEOS -	EEOS	1422	73	AM	6.5	385 -	-	333	370		SC		3/18/2016	SC
7	/	-						-	-							
8	/	-						-	-							
9	/	-						-	-							
10	/	-						-	-							
11	/	-						-	-							
12	/	-						-	-							
13	/	-						-	-							
14	/	-						-	-							
15	/	-						-	-							
16	/	-						-	-							
17	/	-						-	-							
								DAILY TOTAL		1585						
								DESTRUCTIVE LENGTH CARRY-OVER			370					

* REFERENCE SEAM ENDPOINTS FROM AN END OF SEAM (EOS), A REPAIR NUMBER, OR A POINT LOCATION ON THE SEAM.

** COLUMNS TO BE USED BY THE DATA REVIEWER ONLY

GCS FORM: G13
(JUNE 1992)

REVIEWED BY: KMG DATE: 3/17/2016

GOLDER ASSOCIATES

GEOMEMBRANE SEAM LOG

PROJECT NUMBER: 130 2962CQA
PROJECT TITLE: OU3 RA Construction
OWNER: Solutia AL
LOCATION: Anniston AL
CONTRACTOR: Taylor

PASSING TRIAL SEAMS

		NO.	TIME	TECH ID
x	FUSION	TF02	727	AM
	EXTRUSION			

DESTRUCTIVE LENGTH CARRY-OVER FROM PREVIOUS LOG: 370

DATE: 3/18/2016

MACHINE # 454

SHEET NUMBER: 1/1

	SEAM NUMBER	SEAM SECTION* START POINT	SEAM SECTION* FINISH POINT	APPROX. START TIME	AMB. AIR TEMP.	WELD TECH.	PREHEAT OR MACH. SPEED	MACHINE TEMPERATURES DIGITAL SET WEDGE OR BARREL	MACHINE TEMPERATURES INDICATOR WEDGE OR BARREL NOZZLE	APPROX. LENGTH WELDED	LENGTH FROM PREVIOUS DESTR.	DESTR. NUMBER	MON.	REMARKS	** NON-DESTRUCTIVE TEST DATE	** NON-DESTRUCTIVE MON.
1	A26 / A27	EEOS -	WEOS	749	52	AM	5.5	385 -	-	326	500/196	DSF12	SC	2K	3/18/2016	SC
2	A27 / A28	EEOS -	WEOS	833	53	AM	5.5	385 -	-	324	500/20	DSF13	SC	2M	3/18/2016	SC
3	A29 / A30	EEOS -	WEOS	928	56	AM	5.5	385 -	-	319	339		SC		3/18/2016	SC
4	A30 / A33	EEOS -	WEOS	1112	63	AM	5.5	385 -	-	29	368		SC		3/18/2016	SC
5	A30 / A32	EEOS -	WEOS	1145	63	AM	5.5	385 -	-	294	500/162	DSF16	SC	2S	3/18/2016	SC
6	A30 / A32		WEOS	1215	63	AM	5.5	385 -	-	0	162/0	DSF17	SC	2T	3/18/2016	SC
7	/	-						-	-							
8	/	-						-	-							
9	/	-						-	-							
10	/	-						-	-							
11	/	-						-	-							
12	/	-						-	-							
13	/	-						-	-							
14	/	-						-	-							
15	/	-						-	-							
16	/	-						-	-							
17	/	-						-	-							
								DAILY TOTAL		1292						
								DESTRUCTIVE LENGTH CARRY-OVER			0					

* REFERENCE SEAM ENDPOINTS FROM AN END OF SEAM (EOS), A REPAIR NUMBER, OR A POINT LOCATION ON THE SEAM.

** COLUMNS TO BE USED BY THE DATA REVIEWER ONLY

GCS FORM: G13
(JUNE 1992)

REVIEWED BY: KMG DATE: 3/18/2016

GOLDER ASSOCIATES

GEOMEMBRANE SEAM LOG

PROJECT NUMBER: 130 2962CQA
PROJECT TITLE: OU3 RA Construction
OWNER: Solutia AL
LOCATION: Anniston AL
CONTRACTOR: Taylor

[x] FUSION
[ ] EXTRUSION

PASSING TRIAL SEAMS

NO.	TIME	TECH ID
TF01	1240	RC

DATE 3/16/2016

MACHINE # __ 479

DESTRUCTIVE LENGTH CARRY-OVER FROM PREVIOUS LOG 0

SHEET NUMBER 1/1

	SEAM NUMBER	SEAM SECTION* START POINT	SEAM SECTION* FINISH POINT	APPROX. START TIME	AMB. AIR TEMP.	WELD TECH.	PREHEAT OR MACH. SPEED	MACHINE TEMPERATURES DIGITAL SET WEDGE OR BARREL NOZZLE	MACHINE TEMPERATURES INDICATOR WEDGE OR BARREL NOZZLE	APPROX. LENGTH WELDED	LENGTH FROM PREVIOUS DESTR.	DESTR. NUMBER	MON.	REMARKS	** NON-DESTRUCTIVE TEST DATE	** NON-DESTRUCTIVE MON.
1	A1 / A2	WEEOS -	EEOS	1258	75	RC	6.5	385 -	-	83	83		SC		3/16/2016	SC
2	A3 / A4	WEEOS -	EEOS	1310	75	RC	6.5	385 -	-	82	88/77	DSF1	SC	1D	3/16/2016	SC
3	A5 / A6	WEEOS -	EEOS	1328	75	RC	6.5	385 -	-	83	160		SC		3/16/2016	SC
4	A1 / A8	WEEOS -	EEOS	1351	75	RC	6.5	385 -	-	275	435		SC		3/16/2016	SC
5	A10 / A11	WEEOS -	EEOS	1500	75	RC	6.5	385 -	-	76	500/11	DSF3	SC		3/16/2016	SC
6	A9 / A11	WEEOS -	EEOS	1511	75	RC	6.5	385 -	-	245	256		SC	1G	3/16/2016	SC
7	/	-							-							
8	/	-							-							
9	/	-							-							
10	/	-							-							
11	/	-						-	-							
12	/	-						-	-							
13	/	-						-	-							
14	/	-						-	-							
15	/	-						-	-							
16	/	-						-	-							
17	/	-						-	-							
								DAILY TOTAL		844						
								DESTRUCTIVE LENGTH CARRY-OVER			256					

* REFERENCE SEAM ENDPOINTS FROM AN END OF SEAM (EOS), A REPAIR NUMBER, OR A POINT LOCATION ON THE SEAM.

** COLUMNS TO BE USED BY THE DATA REVIEWER ONLY

GCS FORM: G13
(JUNE 1992)

REVIEWED BY: KMG DATE: 3/17/2016

GOLDER ASSOCIATES

GEOMEMBRANE SEAM LOG

PROJECT NUMBER: 130 2962CQA
PROJECT TITLE: OU3 RA Construction
OWNER: Solutia AL
LOCATION: Anniston AL
CONTRACTOR: Taylor

		PASSING TRIAL SEAMS		
		NO.	TIME	TECH ID
x	FUSION	TF01	725	RC
	EXTRUSION	TF03	1303	RC

DATE 3/17/2016

DESTRUCTIVE LENGTH CARRY-OVER FROM PREVIOUS LOG 256

MACHINE # 479

SHEET NUMBER 1/1

	SEAM NUMBER		SEAM SECTION* START POINT	SEAM SECTION* FINISH POINT	APPROX. START TIME	AMB. AIR TEMP.	WELD TECH.	PREHEAT OR MACH. SPEED	MACHINE TEMPERATURES DIGITAL SET WEDGE OR BARREL NOZZLE	MACHINE TEMPERATURES INDICATOR WEDGE OR BARREL NOZZLE	APPROX. LENGTH WELDED	LENGTH FROM PREVIOUS DESTR.	DESTR. NUMBER	MON.	REMARKS	** NON-DESTRUCTIVE TEST DATE	** NON-DESTRUCTIVE MON.
1	A13	/ A14	WEEOS -	EEOS	740	46	RC	5.5	385 -	-	37	293		SC		3/17/2016	SC
2	A12	/ A14	WEEOS -	EEOS	748	46	RC	5.5	385 -	-	289	500/82	DSF5	SC	1M	3/17/2016	SC
3	A15	/ A16	WEEOS -	EEOS	845	48	RC	5.5	385 -	-	330	412		SC		3/17/2016	SC
4	A17	/ A18	WEEOS -	EEOS	951	56	RC	5.5	385 -	-	333	500/245	DSF7	SC	1P	3/17/2016	SC
5	A19	/ A20	WEEOS -	EEOS	1108	65	RC	5.5	385 -	-	335	500/80	DSF9	SC	1R	3/17/2016	SC
6	A22	/ A23	NEOS -	SEOS	1315	73	RC	6	385 -	-	22	102		SC		3/17/2016	SC
7	A20	/ A22	1X -	EEOS	1325	73	RC	6	386 -	-	24	126		SC		3/17/2016	SC
8	A20	/ A21	WEEOS -	EEOS	1331	73	RC	6	387 -	-	50	176		SC		3/17/2016	SC
9	A23	/ A24	WEEOS -	EEOS	1355	73	RC	6	388 -	-	253	429		SC		3/17/2016	SC
10	A22	/ A24	WEEOS -	EEOS	1428	73	RC	6	389 -	-	30	459		SC		3/17/2016	SC
11	A21	/ A24	WEEOS -	EEOS	1436	73	RC	6	390 -	-	50	500/9	DSF11	SC	2E	3/17/2016	SC
12	A21	/ A22	NEOS -	SEOS	-	-	-	-	-	-	-	-	-	SC	Covered by 2A		
13		/	-						-	-							
14		/	-						-	-							
15		/	-						-	-							
16		/	-						-	-							
17		/	-						-	-							
	DAILY TOTAL										1753						
	DESTRUCTIVE LENGTH CARRY-OVER											9					

* REFERENCE SEAM ENDPOINTS FROM AN END OF SEAM (EOS), A REPAIR NUMBER, OR A POINT LOCATION ON THE SEAM.

** COLUMNS TO BE USED BY THE DATA REVIEWER ONLY

GCS FORM: G13
(JUNE 1992)

REVIEWED BY: KMG DATE: 3/18/2016

GOLDER ASSOCIATES

GEOMEMBRANE SEAM LOG

PROJECT NUMBER: 130 2962CQA
PROJECT TITLE: OU3 RA Construction
OWNER: Solutia AL
LOCATION: Anniston AL
CONTRACTOR: Taylor

		PASSING TRIAL SEAMS NO.	TIME	TECH ID
x	FUSION	TF01	727	RC
	EXTRUSION			

DATE 3/18/2016

DESTRUCTIVE LENGTH CARRY-OVER FROM PREVIOUS LOG 9

MACHINE # 479

SHEET NUMBER 1/1

	SEAM NUMBER	SEAM SECTION* START POINT	SEAM SECTION* FINISH POINT	APPROX. START TIME	AMB. AIR TEMP.	WELD TECH.	PREHEAT OR MACH. SPEED	MACHINE TEMPERATURES DIGITAL SET WEDGE OR BARREL NOZZLE	MACHINE TEMPERATURES INDICATOR WEDGE OR BARREL NOZZLE	APPROX. LENGTH WELDED	LENGTH FROM PREVIOUS DESTR.	DESTR. NUMBER	MON.	REMARKS	** NON-DESTRUCTIVE TEST DATE	** NON-DESTRUCTIVE MON.
1	A25 / A26	EEOS	WEOS	743	52	RC	5.5	385	-	330	339		SC		3/18/2016	SC
2	A28 / A29	EEOS	WEOS	841	53	RC	5.5	385	-	323	500/162	DSF14	SC	2N	3/18/2016	SC
3	A32 / A33	SEOS	NEOS	1008	63	RC	5.5	385	-	13	175		SC		3/18/2016	SC
4	A31 / A33	EEOS	WEOS	1023	63	RC	5.5	385	-	27	202		SC		3/18/2016	SC
5	A31 / A32	EEOS	WEOS	1027	63	RC	5.5	385	-	290	493/0	DSF15	SC	2R	3/18/2016	SC
6	/	-						-	-							
7	/	-						-	-							
8	/	-						-	-							
9	/	-						-	-							
10	/	-						-	-							
11	/	-						-	-							
12	/	-						-	-							
13	/	-						-	-							
14	/	-						-	-							
15	/	-						-	-							
16	/	-						-	-							
17	/	-						-	-							
								DAILY TOTAL		983						
								DESTRUCTIVE LENGTH CARRY-OVER			0					

* REFERENCE SEAM ENDPOINTS FROM AN END OF SEAM (EOS), A REPAIR NUMBER, OR A POINT LOCATION ON THE SEAM.

** COLUMNS TO BE USED BY THE DATA REVIEWER ONLY

GCS FORM: G13
(JUNE 1992)

REVIEWED BY: KMG DATE: 3/18/2016

GOLDER ASSOCIATES

APPENDIX H1.3

Geomembrane Trial Seam Logs

GEOMEMBRANE TRIAL SEAM LOG

PROJECT NUMBER: 130-2962CQA
PROJECT TITLE: OU3 RA Construction
OWNER: SOLUTIA
LOCATION: ANNISTON
CONTRACTOR: TAYLOR

X TF - # = FUSION
TX - # = EXTRUSION

DATE 3/16/2016
SHEET NUMBER 1/1

SAMPLE NUMBER	APPROX. TIME	WELDING MACHINE NUMBER	WELD TECH.	TEMPERATURES: AMBIENT AIR TEMP.	TEMPERATURES: PREHEAT OR MACHINE SPEED	TEMPERATURES: EXTRUDER	TEMPERATURES: NOZZLE OR WEDGE	TEST RESULTS: INSIDE PEEL MODE STRENGTH	TEST RESULTS: OUTSIDE PEEL MODE STRENGTH	TEST RESULTS: SHEAR MODE STRENGTH	PASS OR FAIL	MON.	REMARKS
TF01	1240	479	RC	75	6.5		385	SE1/SE1/SE1 80.9/90/85	SE1/SE1/SE1 90/82/83	BRK/BRK/BRK 107/122/111	PASS	SC	
TF02	1245	454	AM	75	6.5		385	SE1/SE1/SE1 84/89/85	SE1/SE1/SE1 81/84/80	BRK/BRK/BRK 119/120/120	PASS	SC	
								/ /	/ /	/			
								/ /	/ /	/			
								/ /	/ /	/			
								/ /	/ /	/			
								/ /	/ /	/			
								/ /	/ /	/			
								/ /	/ /	/			
								/ /	/ /	/			
								/ /	/ /	/			
								/ /	/ /	/			
								/ /	/ /	/			
								/ /	/ /	/			
								/ /	/ /	/			
								/ /	/ /	/			
								/ /	/ /	/			
								/ /	/ /	/			
								/ /	/ /	/			
								/ /	/ /	/			
								/ /	/ /	/			
								/ /	/ /	/			
								/ /	/ /	/			
								/ /	/ /	/			

REVIEWED BY: KMG DATE: 3/17/2016

GCS FORM: G12
(JUNE 1992)

GOLDER ASSOCIATES

GEOMEMBRANE TRIAL SEAM LOG

PROJECT NUMBER: 130-2962CQA
PROJECT TITLE: OU3 RA Construction
OWNER: SOLUTIA
LOCATION: ANNISTON
CONTRACTOR: TAYLOR

X TF - # = FUSION
TX - # = EXTRUSION

DATE 3/17/2016
SHEET NUMBER 1/1

SAMPLE NUMBER	APPROX. TIME	WELDING MACHINE NUMBER	WELD TECH.	TEMPERATURES: AMBIENT AIR TEMP.	TEMPERATURES: PREHEAT OR MACHINE SPEED	TEMPERATURES: EXTRUDER	TEMPERATURES: NOZZLE OR WEDGE	TEST RESULTS: INSIDE PEEL MODE STRENGTH	TEST RESULTS: OUTSIDE PEEL MODE STRENGTH	TEST RESULTS: SHEAR MODE STRENGTH	PASS OR FAIL	MON.	REMARKS
								SE1/SE1/SE1	SE1/SE1/SE1	BRK/BRK/BRK			
TF01	725	479	RC	46	5.5		385	111/101/105	102/104/108	155/151/155	PASS	SC	
								SE1/SE1/SE1	SE1/SE1/SE1	BRK/BRK/BRK			
TF02	727	454	AM	46	5.5		385	101/106/101	107/96/91	147/144/149	PASS	SC	
								SE1/SE1/SE1	SE1/SE1/SE1	BRK/BRK/BRK			
TF03	1303	479	RC	73	6		385	81/87/86	85/83/87	105/99/105	PASS	SC	
								SE1/SE1/SE1	SE1/SE1/SE1	BRK/BRK/BRK			
TF04	1303	454	AM	73	6		385	78/82/78	81/78/82	99/97/96	PASS	SC	
								SE1/SE1/SE1	SE1/SE1/SE1	BRK/BRK/BRK			Welder became
TF05	1354	454	AM	73	6		385	91/88/93	86/89/83	114/113/114	PASS	SC	unplugged
								/ /	/ /	/			
								/ /	/ /	/			
								/ /	/ /	/			
								/ /	/ /	/			
								/ /	/ /	/			
								/ /	/ /	/			
								/ /	/ /	/			
								/ /	/ /	/			
								/ /	/ /	/			
								/ /	/ /	/			
								/ /	/ /	/			
								/ /	/ /	/			
								/ /	/ /	/			
								/ /	/ /	/			
								/ /	/ /	/			
								/ /	/ /	/			
								/ /	/ /	/			
								/ /	/ /	/			

REVIEWED BY: KMG DATE: 3/18/2016

GCS FORM: G12
(JUNE 1992)

GOLDER ASSOCIATES

GEOMEMBRANE TRIAL SEAM LOG

PROJECT NUMBER: 130-2962CQA
PROJECT TITLE: OU3 RA Construction
OWNER: SOLUTIA
LOCATION: ANNISTON
CONTRACTOR: TAYLOR

X TF - # = FUSION
TX - # = EXTRUSION

DATE 3/18/2016
SHEET NUMBER 1/1

SAMPLE NUMBER	APPROX. TIME	WELDING MACHINE NUMBER	WELD TECH.	TEMPERATURES: AMBIENT AIR TEMP.	TEMPERATURES: PREHEAT OR MACHINE SPEED	TEMPERATURES: EXTRUDER	TEMPERATURES: NOZZLE OR WEDGE	TEST RESULTS: INSIDE PEEL MODE STRENGTH	TEST RESULTS: OUTSIDE PEEL MODE STRENGTH	TEST RESULTS: SHEAR MODE STRENGTH	PASS OR FAIL	MON.	REMARKS
								SE1/SE1/SE1	SE1/SE1/SE1	BRK/BRK/BRK			
TF01	727	479	RC	48	5.5		385	105/102/98	101/112/102	138/137/139	PASS	SC	
								SE1/SE1/SE1	SE1/SE1/SE1	BRK/BRK/BRK			
TF02	727	454	AM	48	5.5		385	105/103/108	97/102/99	148/148/144	PASS	SC	
								/ /	/ /	/			
								/ /	/ /	/			
								/ /	/ /	/			
								/ /	/ /	/			
								/ /	/ /	/			
								/ /	/ /	/			
								/ /	/ /	/			
								/ /	/ /	/			
								/ /	/ /	/			
								/ /	/ /	/			
								/ /	/ /	/			
								/ /	/ /	/			
								/ /	/ /	/			
								/ /	/ /	/			
								/ /	/ /	/			
								/ /	/ /	/			
								/ /	/ /	/			
								/ /	/ /	/			
								/ /	/ /	/			
								/ /	/ /	/			
								/ /	/ /	/			
								/ /	/ /	/			

GCS FORM: G12
(JUNE 1992)

REVIEWED BY: KMG DATE: 3/22/2016

GOLDER ASSOCIATES

GEOMEMBRANE TRIAL SEAM LOG

PROJECT NUMBER: 130-2962CQA
PROJECT TITLE: OU3 RA Construction
OWNER: SOLUTIA
LOCATION: ANNISTON
CONTRACTOR: TAYLOR

[ ] TF - # = FUSION
[X] TX - # = EXTRUSION

DATE 3/20/2016
SHEET NUMBER 1/1

SAMPLE NUMBER	APPROX. TIME	WELDING MACHINE NUMBER	WELD TECH.	TEMPERATURES: AMBIENT AIR TEMP.	TEMPERATURES: PREHEAT OR MACHINE SPEED	TEMPERATURES: EXTRUDER	TEMPERATURES: NOZZLE OR WEDGE	TEST RESULTS: INSIDE PEEL MODE STRENGTH	TEST RESULTS: OUTSIDE PEEL MODE STRENGTH	TEST RESULTS: SHEAR MODE STRENGTH	PASS OR FAIL	MON.	REMARKS
TX01	854	62	MN	42		260	250	SE3/SE3/SE3 98/58/114	/ / / /	BRK/BRK/BRK 132/134	PASS	SC	
TX02	1250	62	MN	53		260	250	SE3/SE3/SE3 93/114/151	/ / / /	BRK/BRK/BRK 141/128/137	PASS	SC	
								/ / / /	/ / / /	/ /			
								/ / / /	/ / / /	/ /			
								/ / / /	/ / / /	/ /			
								/ / / /	/ / / /	/ /			
								/ / / /	/ / / /	/ /			
								/ / / /	/ / / /	/ /			
								/ / / /	/ / / /	/ /			
								/ / / /	/ / / /	/ /			
								/ / / /	/ / / /	/ /			
								/ / / /	/ / / /	/ /			
								/ / / /	/ / / /	/ /			
								/ / / /	/ / / /	/ /			

GCS FORM: G12
(JUNE 1992)

REVIEWED BY: KMG DATE: 3/22/2016

GOLDER ASSOCIATES

GEOMEMBRANE TRIAL SEAM LOG

PROJECT NUMBER: 130-2962CQA
PROJECT TITLE: OU3 RA Construction
OWNER: SOLUTIA
LOCATION: ANNISTON
CONTRACTOR: TAYLOR

[ ] TF - # = FUSION
[X] TX - # = EXTRUSION

DATE 3/21/2016
SHEET NUMBER 1/1

SAMPLE NUMBER	APPROX. TIME	WELDING MACHINE NUMBER	WELD TECH.	TEMPERATURES: AMBIENT AIR TEMP.	TEMPERATURES: PREHEAT OR MACHINE SPEED	TEMPERATURES: EXTRUDER	TEMPERATURES: NOZZLE OR WEDGE	TEST RESULTS: INSIDE PEEL MODE STRENGTH	TEST RESULTS: OUTSIDE PEEL MODE STRENGTH	TEST RESULTS: SHEAR MODE STRENGTH	PASS OR FAIL	MON.	REMARKS
TX01	1035	62	MN	44		260	250	SE3/SE3/SE3 86/80/101	/ / / /	BRK/BRK/BRK 129/129/138	PASS	SC	
TX02	1244	62	RC	53		260	250	SE3/SE3/SE3 99/96/95	/ / / /	BRK/BRK/BRK 120/111/120	PASS	SC	
TX03	1245	62	MN	53		26	250	SE3/SE3/SE3 81/93/103	/ / / /	BRK/BRK/BRK 111/121/125	PASS	SC	
TX04	1246	62	BT	53		260	250	SE3/SE3/SE3 87/92/97	/ / / /	BRK/BRK/BRK 120/123/119	PASS	SC	
TX05	1512	51	MN	53		260	250	SE3/SE3/SE3 91/92/105	/ / / /	BRK/BRK/BRK 118/129/108	PASS	SC	
								/ / / /	/ / / /	/ /			
								/ / / /	/ / / /	/ /			
								/ / / /	/ / / /	/ /			
								/ / / /	/ / / /	/ /			
								/ / / /	/ / / /	/ /			
								/ / / /	/ / / /	/ /			
								/ / / /	/ / / /	/ /			
								/ / / /	/ / / /	/ /			
								/ / / /	/ / / /	/ /			

GCS FORM: G12
(JUNE 1992)

REVIEWED BY: KMG DATE: 3/22/2016

GOLDER ASSOCIATES

GEOMEMBRANE TRIAL SEAM LOG

PROJECT NUMBER: 130-2962CQA
PROJECT TITLE: OU3 RA Construction
OWNER: SOLUTIA
LOCATION: ANNISTON
CONTRACTOR: TAYLOR

[ ] TF - # = FUSION
[X] TX - # = EXTRUSION

DATE 3/22/2016
SHEET NUMBER 1/1

SAMPLE NUMBER	APPROX. TIME	WELDING MACHINE NUMBER	WELD TECH.	TEMPERATURES: AMBIENT AIR TEMP.	TEMPERATURES: PREHEAT OR MACHINE SPEED	TEMPERATURES: EXTRUDER	TEMPERATURES: NOZZLE OR WEDGE	TEST RESULTS: INSIDE PEEL MODE STRENGTH	TEST RESULTS: OUTSIDE PEEL MODE STRENGTH	TEST RESULTS: SHEAR MODE STRENGTH	PASS OR FAIL	MON.	REMARKS
TX01	1020	51	RC	53		250	250	SE3/SE3/SE3 90/84/96	/ / / /	BRK/BRK/BRK 131/132/122	PASS	SC	
TX02	1300	51	RC	62		250	250	SE3/SE3/SE3 78/91/89	/ / / /	BRK/BRK/BRK 127/119/124	PASS	SC	
								/ / / /	/ / / /	/ / / /			
								/ / / /	/ / / /	/ / / /			
								/ / / /	/ / / /	/ /			
								/ / / /	/ / / /	/ /			
								/ / / /	/ / / /	/ /			
								/ / / /	/ / / /	/ /			
								/ / / /	/ / / /	/ /			
								/ / / /	/ / / /	/ /			
								/ / / /	/ / / /	/ /			
								/ / / /	/ / / /	/ /			
								/ / / /	/ / / /	/ /			

GCS FORM: G12
(JUNE 1992)

REVIEWED BY: KMG DATE: 3/23/2016

GOLDER ASSOCIATES

GEOMEMBRANE TRIAL SEAM LOG

PROJECT NUMBER: 130-2962CQA
PROJECT TITLE: OU3 RA Construction
OWNER: SOLUTIA
LOCATION: ANNISTON
CONTRACTOR: TAYLOR

[ ] TF - # = FUSION
[X] TX - # = EXTRUSION

DATE 3/30/2016
SHEET NUMBER 1/1

SAMPLE NUMBER	APPROX. TIME	WELDING MACHINE NUMBER	WELD TECH.	TEMPERATURES: AMBIENT AIR TEMP.	TEMPERATURES: PREHEAT OR MACHINE SPEED	TEMPERATURES: EXTRUDER	TEMPERATURES: NOZZLE OR WEDGE	TEST RESULTS: INSIDE PEEL MODE STRENGTH	TEST RESULTS: OUTSIDE PEEL MODE STRENGTH	TEST RESULTS: SHEAR MODE STRENGTH	PASS OR FAIL	MON.	REMARKS
								SE3/SE3/SE3	/ /	BRK/BRK/BRK			
TX01	805	51	MN	50		250	250	118/116/120	/ /	134/137/142	PASS	SC	
								/ /	/ /	/ /			
								/ /	/ /	/ /			
								/ /	/ /	/ /			
								/ /	/ /	/ /			
								/ /	/ /	/ /			
								/ /	/ /	/ /			
								/ /	/ /	/ /			
								/ /	/ /	/ /			
								/ /	/ /	/ /			
								/ /	/ /	/ /			
								/ /	/ /	/ /			
								/ /	/ /	/ /			
								/ /	/ /	/ /			
								/ /	/ /	/ /			
								/ /	/ /	/ /			
								/ /	/ /	/ /			
								/ /	/ /	/ /			
								/ /	/ /	/ /			

GCS FORM: G12
(JUNE 1992)

REVIEWED BY: KMG DATE: 3/31/2016

GOLDER ASSOCIATES

APPENDIX H1.4

Geomembrane Vacuum Test Logs

GEOMEMBRANE VACUUM TEST LOG

PROJECT NUMBER: 130 2962CQA
PROJECT TITLE: OU3 RA Construction
OWNER: Solutia
LOCATION: Anniston AL
CONTRACTOR: Taylor

REPAIRS

	DEFECT CODE	TEST DATE	TECH ID	DEFECTS * *	OBS. TEST	MON.	REMARKS
1	1C	3/20/2016	AM	NONE	Y	SC	
2	1D	3/20/2016	AM	NONE	Y	SC	
3	1E	3/20/2016	AM	NONE	Y	SC	
4	1F	3/20/2016	AM	NONE	Y	SC	
5	1G	3/20/2016	AM	NONE	Y	SC	
6	1J	3/20/2016	AM	NONE	Y	SC	
7	1K	3/20/2016	AM	NONE	Y	SC	
8	1P	3/20/2016	AM	NONE	Y	SC	
9	1Q	3/20/2016	AM	NONE	Y	SC	
10	1N	3/20/2016	AM	NONE	Y	SC	
11	1M	3/20/2016	AM	NONE	Y	SC	
12	1R	3/20/2016	AM	NONE	Y	SC	
13	1S	3/20/2016	AM	NONE	Y	SC	
14	2B	3/20/2016	AM	NONE	Y	SC	
15	1W	3/20/2016	AM	NONE	Y	SC	
16	2C	3/20/2016	AM	NONE	Y	SC	
17	3D	3/20/2016	AM	NONE	Y	SC	
18	2E	3/20/2016	AM	NONE	Y	SC	
19	3E	3/20/2016	AM	NONE	Y	SC	
20	2K	3/20/2016	AM	NONE	Y	SC	
21	3F	3/20/2016	AM	NONE	Y	SC	
22	3G	3/20/2016	AM	NONE	Y	SC	
23	3H	3/20/2016	AM	NONE	Y	SC	
24	3I	3/20/2016	AM	NONE	Y	SC	
25	3J	3/20/2016	AM	NONE	Y	SC	
26	3K	3/20/2016	AM	NONE	Y	SC	
27	2N	3/20/2016	AM	NONE	Y	SC	
28	2S	3/20/2016	AM	NONE	Y	SC	
29	2W	3/20/2016	AM	NONE	Y	SC	
30	2T	3/20/2016	AM	NONE	Y	SC	
31	2R	3/20/2016	AM	NONE	Y	SC	
32	2M	3/20/2016	AM	NONE	Y	SC	

REPAIRS

	DEFECT CODE	TEST DATE	TECH ID	DEFECTS * *	OBS. TEST	MON.	REMARKS
33	2H	3/22/2016	AM	NONE	Y	SC	
34	2I	3/22/2016	AM	NONE	Y	SC	
35	2J	3/22/2016	AM	NONE	Y	SC	
36	2G	3/22/2016	AM	NONE	Y	SC	
37	3B	3/22/2016	AM	NONE	Y	SC	
38	3A	3/22/2016	AM	NONE	N	SC	
39	2Q	3/22/2016	AM	NONE	Y	SC	
40	3C	3/22/2016	AM	NONE	Y	SC	
41	29	3/22/2016	AM	NONE	N	SC	
42	2X	3/22/2016	AM	NONE	Y	SC	
43	3N	3/22/2016	AM	NONE	Y	SC	
44	3P	3/22/2016	AM	NONE	Y	SC	
45	3S	3/22/2016	AM	NONE	Y	SC	
46	3T	3/22/2016	AM	NONE	Y	SC	
47	2F	3/22/2016	AM	NONE	Y	SC	
48	2A	3/22/2016	AM	NONE	Y	SC	
49	3R	3/22/2016	AM	NONE	Y	SC	
50	1X	3/22/2016	AM	NONE	Y	SC	
51	1H	3/22/2016	AM	NONE	Y	SC	
52	3Q	3/22/2016	AM	NONE	Y	SC	
53	1A	3/22/2016	AM	NONE	Y	SC	
54	1B	3/22/2016	AM	NONE	Y	SC	
55	3W	3/22/2016	AM	NONE	Y	SC	
56	3M	3/22/2016	AM	NONE	Y	SC	
57	3X	3/22/2016	AM	NONE	Y	SC	
58	4A	3/30/2016	AM	NONE	Y	SC	
59	4B	3/30/2016	RC	NONE	Y	SC	
60							
61							
62							
63							
64							

* * RECORD QUANTITY OF LEAKS DETECTED AND REFERENCE NEW DEFECT CODE IN REMARKS.

GOLDER FORM: G17-tss
(January 2005)

REVIEWED BY: _KMG_____ DATE ___3/23/2016_____

GOLDER ASSOCIATES INC.

APPENDIX H1.5

Geomembrane Seam Pressure Test Logs

GEOMEMBRANE SEAM PRESSURE TEST LOG

PROJECT NUMBER: 130 29G2CQA
PROJECT TITLE: OU3 RA Construction
OWNER: Solutia
LOCATION: Anniston AL
CONTRACTOR: Taylor

DATE: 3/16/2016
SHEET NUMBER: 1/1

	SEAM NUMBER	SEAM SECTION * FROM	SEAM SECTION * TO	PRESS. GAUGE NUMBER	TECH ID	TIME START	TIME FINISH	PRESSURE INITIAL	PRESSURE FINAL	OBS. TEST	RESULTS PASS/ FAIL	SEAM COMPLETE NO	SEAM COMPLETE YES	MON.	REMARKS
1	A1 / A2	WEOS -	1A	3	KT	1315 :	1320	30 :	29	Y	PASS	X		SC	
2	A1 / A2	1A	EEOS	2	KT	1310 :	1315	30 :	30	Y	PASS		X	SC	
3	A2 / A3	WEEOS -	EEEOS	2	KT	1325 :	1330	30 :	30	Y	PASS		X	SC	
4	A3 / A4	WEEOS -	EEEOS	1	GC	1349 :	1354	30 :	30	Y	PASS		X	SC	
5	A4 / A5	WEEOS -	EEEOS	3	GC	1353 :	1358	30 :	30	N	PASS		X	SC	
6	A5 / A6	WEOS -	1B	2	GC	1422 :	1427	30 :	30	N	PASS		X	SC	
7	A5 / A6	1B -	EEOS	2	GC	1408 :	1413	30 :	30	N	PASS	X		SC	
8	A6 / A7	WEEOS -	EEEOS	3	GC	1411 :	1416	30 :	28	Y	PASS		X	SC	
9	A9 / A10	NEOS -	SEOS	2	GC	1430 :	1435	30 :	28	Y	PASS		X	SC	
10	A12 / A13	NEOS -	SEOS	3	GC	1542 :	1547	30 :	27	Y	PASS		X	SC	
11	A1 / A8	WEEOS -	EEEOS	3	MN	1550 :	1555	35 :	34	Y	PASS		X	SC	
12	A8 / A10	WEEOS -	EEEOS	3	KT	1600 :	1605	32 :	32	Y	PASS		X	SC	
13	A8 / A9	WEEOS -	EEEOS	3	KT	1600 :	1605	32 :	32	Y	PASS		X	SC	
14	A10 / A11	WEEOS -	EEEOS	1	KT	1610 :	1615	34 :	32	Y	PASS		X	SC	
15	A9 / A11	WEEOS -	EEEOS	1	KT	1610 :	1615	34 :	32	Y	PASS		X	SC	
16	A11 / A13	WEEOS -	EEEOS	1	KT	1627 :	1632	30 :	30	Y	PASS		X	SC	
17	A11 / A12	WEEOS -	EEEOS	1	KT	1627 :	1632	30 :	30	Y	PASS		X	SC	
18	/	-				:		:							
19	/	-				:		:							
20	/	-				:		:							

* REFERENCE SEAM ENDPOINTS FROM AND END OF SEAM (EOS), A REPAIR NUMBER,
OR A POINT LOCATION ON THE SEAM (i e, REFERENCE POINT, DISTANCE, DIRECTION FROM REF. PT.)

GCS FORM: G16
(JUNE 1992)

REVIEWED BY: KMG DATE: 3/17/2016

GOLDER ASSOCIATES

GEOMEMBRANE SEAM PRESSURE TEST LOG

PROJECT NUMBER: 130 29G2CQA
PROJECT TITLE: OU3 RA Construction
OWNER: Solutia
LOCATION: Anniston AL
CONTRACTOR: Taylor

DATE: 3/17/2016
SHEET NUMBER: 1/2

	SEAM NUMBER	SEAM SECTION * FROM	TO	PRESS. GAUGE NUMBER	TECH ID	TIME START	FINISH	PRESSURE INITIAL	FINAL	OBS. TEST	RESULTS PASS/ FAIL	SEAM COMPLETE NO	YES	MON.	REMARKS
1	A22 / A23	SEOS -	NEOS	1	KT	1322 :	1327	30 :	30	N	PASS		X	SC	
2	A13 / A14	WEOS -	EEOS	2	MN	1438 :	1443	32 :	32	N	PASS		X	SC	
3	A12 / A14	WEOS -	EEOS	2	MN	1438 :	1443	32 :	29	N	PASS		X	SC	
4	A14 / A15	WEOS -	EEOS	1	MN	1440 :	1445	30 :	30	N	PASS		X	SC	
5	A15 / A16	WEOS -	EEOS	2	MN	1448 :	1453	30 :	30	Y	PASS		X	SC	
6	A16 / A17	WEOS -	EEOS	2	MN	1450 :	1455	30 :	30	Y	PASS		X	SC	
7	A17 / A18	WEOS -	EEOS	2	MN	1502 :	1507	31 :	31	Y	PASS		X	SC	
8	A18 / A19	WEOS -	EEOS	1	MN	1506 :	1511	30 :	30	Y	PASS		X	SC	
9	A19 / A20	WEOS -	EEOS	2	MN	1510 :	1515	30 :	30	Y	PASS		X	SC	
10	A20 / A23	WEOS -	2B	1	MN	1517 :	1522	30 :	30	Y	PASS	X		SC	
11	A23 / A24	WEOS -	EEOS	1	MN	1520 :	1525	31 :	31	Y	PASS		X	SC	
12	A24 / A25	2I -	2G	1	MN	1530 :	1535	30 :	30	Y	PASS	X		SC	
13	A24 / A25	2G -	EEOS	1	MN	1545 :	1550	30 :	30	Y	PASS	X		SC	
14	A22 / A24	WEOS -	EEOS	2	MN	1545 :	1550	32 :	30	Y	PASS		X	SC	
15	A21 / A22	WEOS -	EEOS	2	MN	1551 #	1556	32 :	32	Y	PASS		X	SC	
16	A20 / A22	1X -	EEOS	1	MN	1553 :	1557	30 :	30	Y	PASS	X		SC	
17	A20 / A23	2B -	EEOS	1	RC	1607 :	1612	30 :	30	Y	PASS		X	SC	
18	A20 / A21	WEOS -	EEOS	2	MN	1606 :	1611	31 :	31	Y	PASS		X	SC	
19	A21 / A22	- -	-	-	-	- :	-	- :	-	-	-	-	-	SC	Covered by 2A
20	/	-				:		:							

* REFERENCE SEAM ENDPOINTS FROM AND END OF SEAM (EOS), A REPAIR NUMBER,
OR A POINT LOCATION ON THE SEAM (i e, REFERENCE POINT, DISTANCE, DIRECTION FROM REF. PT.)

GCS FORM: G16
(JUNE 1992)

REVIEWED BY: KMG DATE: 3/18/2016

GOLDER ASSOCIATES

GEOMEMBRANE SEAM PRESSURE TEST LOG

PROJECT NUMBER: 130 2962CQA
PROJECT TITLE: OU3 RA Construction
OWNER: Solutia
LOCATION: Anniston AL
CONTRACTOR: Taylor

DATE: 3/17/2016
SHEET NUMBER: 2/2

	SEAM NUMBER	SEAM SECTION * FROM	TO	PRESS. GAUGE NUMBER	TECH ID	TIME START	FINISH	PRESSURE INITIAL	FINAL	OBS. TEST	RESULTS PASS/ FAIL	SEAM COMPLETE NO	YES	MON.	REMARKS
1	A20 / A22	WEOS -	1X	1	RC	1607 :	1612	31 :	30	Y	PASS		X	SC	
2	/	-				:		:							
3	/	-				:		:							
4	/	-				:		:							
5	/	-				:		:							
6	/	-				:		:							
7	/	-				:		:							
8	/	-				:		:							
9	/	-				:		:							
10	/	-				:		:							
11	/	-				:		:							
12	/	-				:		:							
13	/	-				:		:							
14	/	-				:		:							
15	/	-				:		:							
16	/	-				:		:							
17	/	-				:		:							
18	/	-				:		:							
19	/	-				:		:							
20	/	-				:		:							

* REFERENCE SEAM ENDPOINTS FROM AND END OF SEAM (EOS), A REPAIR NUMBER,
OR A POINT LOCATION ON THE SEAM (i e, REFERENCE POINT, DISTANCE, DIRECTION FROM REF. PT.)

GCS FORM: G16
(JUNE 1992)

REVIEWED BY: KMG DATE: 3/17/2016

GOLDER ASSOCIATES

GEOMEMBRANE SEAM PRESSURE TEST LOG

PROJECT NUMBER: 130 29G2CQA
PROJECT TITLE: OU3 RA Construction
OWNER: Solutia
LOCATION: Anniston AL
CONTRACTOR: Taylor

DATE: 3/18/2016
SHEET NUMBER: 1/1

	SEAM NUMBER	SEAM SECTION * FROM	TO	PRESS. GAUGE NUMBER	TECH ID	TIME START	FINISH	PRESSURE INITIAL	FINAL	OBS. TEST	RESULTS PASS/ FAIL	SEAM COMPLETE NO	YES	MON.	REMARKS
1	A32 / A33	SEOS	NEOS	2	MN	1111	1016	30	30	N	PASS		X	SC	
2	A24 / A25	2I	2H	2	MN	1120	1125	31	31	Y	PASS	X		SC	
3	A24 / A25	2H	WEOS	1	MN	1124	1129	31	30	Y	PASS		X	SC	
4	A25 / A26	2J	EEOS	1	MN	1134	1139	30	28	Y	PASS	X	X	SC	
5	A25 / A26	WEOS	2J	2	MN	1131	1136	30	30	Y	PASS		X	SC	
6	A26 / A27	WEOS	EEOS	1	MN	1141	1146	30	30	Y	PASS		X	SC	
7	A27 / A28	WEOS	EEOS	2	MN	1146	1151	31	31	Y	PASS		X	SC	
8	A28 / A29	WEOS	EEOS	1	MN	1145	1154	30	30	Y	PASS		X	SC	
9	A29 / A30	WEOS	EEOS	2	MN	1301	1306	30	28	Y	PASS		X	SC	
10	A30 / A32	WEOS	EEOS	2	MN	1309	1314	31	30	Y	PASS		X	SC	
11	A30 / A33	WEOS	EEOS	2	MN	1309	1314	31	30	Y	PASS		X	SC	
12	A31 / A32	WEOS	EEOS	2	MN	1323	1328	31	31	Y	PASS		X	SC	
13	A31 / A33	WEOS	EEOS	2	MN	1337	1342	31	31	Y	PASS		X	SC	
14	/														
15	/														
16	/														
17	/														
18	/														
19	/														
20	/														

* REFERENCE SEAM ENDPOINTS FROM AND END OF SEAM (EOS), A REPAIR NUMBER,
OR A POINT LOCATION ON THE SEAM (i e, REFERENCE POINT, DISTANCE, DIRECTION FROM REF. PT.)

GCS FORM: G16
(JUNE 1992)

REVIEWED BY: KMG DATE: 3/18/2016

GOLDER ASSOCIATES

APPENDIX H2

Area E

APPENDIX H2.1

Panel Deployment Logs

GEOSYNTHETIC PANEL DEPLOYMENT LOG

PROJECT NUMBER: 130 2962CQA
PROJECT TITLE: OU3 RA Construction
OWNER: Solutia
CONTRACTOR: Taylor
LOCATION: Anniston AL
Area E

GEOMEMBRANE: Secondary Primary **Closure** Other:
SUBGRADE CONDITION: (**Surface Compaction** Protrusions Dessiccation Excessive Moisture)
REMARKS:

TRANSPORT EQUIPMENT: **Loader**

PANEL #	ROLL NUMBER	DEPLY'D LENGTH	AMBIENT AIR TEMP	OBS'D OVERLAP	MONITOR	REMARKS
E1	**3098**	**112**	**51**	**Yes**	**SC**	
E2	**3098**	**129**	**51**	**Yes**	**SC**	
E3	**3085**	**132**	**51**	**Yes**	**SC**	
E4	**3085**	**107**	**53**	**Yes**	**SC**	
E5	**3085**	**20**	**53**	**Yes**	**SC**	
E6	**3085**	**132**	**53**	**Yes**	**SC**	
E7	**3085**	**76**	**61**	**Yes**	**SC**	
E8	**3085**	**56**	**61**	**Yes**	**SC**	
E9	**3098**	**71**	**61**	**Yes**	**SC**	
E10	**3085**	**70**	**61**	**Yes**	**SC**	
E11	**3085**	**71**	**68**	**Yes**	**SC**	
E12	**3076**	**71**	**68**	**Yes**	**SC**	
E13	**3085**	**23**	**68**	**Yes**	**SC**	
E14	**3085**	**23**	**68**	**Yes**	**SC**	
E15	**3098**	**46**	**68**	**Yes**	**SC**	
E16	**3076**	**51**	**55**	**Yes**	**SC**	5/5/2016

Golder Form: G2-TSS
(August 2000)

REVIEWED BY: **KMG** **DATE:** **3/25/2016**

GOLDER ASSOCIATES INC.

APPENDIX H2.2

Geomembrane Seam Logs

GEOMEMBRANE SEAM LOG

PROJECT NUMBER: 130 2962CQA
PROJECT TITLE: OU3 RA Construction
OWNER: Solutia AL
Area E
LOCATION: Anniston AL
CONTRACTOR: Taylor

PASSING TRIAL SEAMS

		NO.	TIME	TECH ID
[ ]	FUSION	TX03	750	IB
[X]	EXTRUSION			

DESTRUCTIVE LENGTH CARRY-OVER FROM PREVIOUS LOG: 0

DATE: 3/26/2016

MACHINE # 62

SHEET NUMBER: 1/1

	SEAM NUMBER	SEAM SECTION* START POINT	SEAM SECTION* FINISH POINT	APPROX. START TIME	AMB. AIR TEMP.	WELD TECH.	PREHEAT OR MACH. SPEED	MACHINE TEMPERATURES DIGITAL SET WEDGE OR BARREL NOZZLE	MACHINE TEMPERATURES INDICATOR WEDGE OR BARREL NOZZLE	APPROX. LENGTH WELDED	LENGTH FROM PREVIOUS DESTR.	DESTR. NUMBER	MON.	REMARKS	** NON-DESTRUCTIVE TEST DATE	** NON-DESTRUCTIVE MON.
1	E3 / ETI	NEOS -	SEOS	800	55	IB	350	250 -	-	22	22		SC		3/28/2016	SC
2	E4 / ETI	NEOS -	SEOS	810	55	IB	350	250 -	-	22	44		SC		3/28/2016	SC
3	E6 / ETI	NEOS -	SEOS	820	55	IB	250	250 -	-	22	66		SC		3/28/2016	SC
4	E7 / ETI	NEOS -	SEOS	835	55	IB	250	250 -	-	22	88		SC		3/28/2016	SC
5	E9 / ETI	NEOS -	SEOS	930	55	IB	250	250 -	-	22	110		SC		3/28/2016	SC
6	E10 / ETI	NEOS -	SEOS	937	55	IB	250	250 -	-	22	132		SC		3/28/2016	SC
7	E11 / ETI	NEOS -	SEOS	945	55	IB	250	250 -	-	22	154		SC		3/28/2016	SC
8	E12 / ETI	NEOS -	SEOS	1005	59	IB	250	250 -	-	22	176		SC		3/28/2016	SC
9	E15 / ETI	NEOS -	SEOS	1033	59	IB	250	250 -	-	22	216		SC		3/28/2016	SC
10	E13 / ETI	NEOS -	SEOS	1020	59	IB	250	250 -	-	4	220		SC		3/28/2016	SC
11	E13 / STI	EEOS -	WEOS	1024	59	IB	250	250 -	-	20	240		SC		3/28/2016	SC
12	E1 / ETI	NEOS -	SEOS	1145	59	IB	250	250 -	-	25	265		SC		3/28/2016	SC
13	E1 / NTI	NEOS -	SEOS	1315	59	IB	250	250 -	-	19	284		SC		3/28/2016	SC
14	E2 / ETI	NEOS -	SEOS	1215	59	IB	251	251 -	-	22	306		SC		3/28/2016	SC
15	/	-						-	-							
16	/	-						-	-							
17	/	-						-	-							
									DAILY TOTAL	288						
									DESTRUCTIVE LENGTH CARRY-OVER		306					

* REFERENCE SEAM ENDPOINTS FROM AN END OF SEAM (EOS), A REPAIR NUMBER, OR A POINT LOCATION ON THE SEAM.

** COLUMNS TO BE USED BY THE DATA REVIEWER ONLY

GCS FORM: G13
(JUNE 1992)

REVIEWED BY: KMG DATE: 3/28/2016

GOLDER ASSOCIATES

GEOMEMBRANE SEAM LOG

PROJECT NUMBER: 130 2962CQA
PROJECT TITLE: OU3 RA Construction
OWNER: Solutia AL
Area E
LOCATION: Anniston AL
CONTRACTOR: Taylor

		PASSING TRIAL SEAMS NO.	TIME	TECH ID
[ ]	FUSION	TX01	910	MN
[X]	EXTRUSION			

DESTRUCTIVE LENGTH CARRY-OVER FROM PREVIOUS LOG: 0

DATE: 5/5/2016

MACHINE # __ 516

SHEET NUMBER: `1/1

	SEAM NUMBER	SEAM SECTION* START POINT	SEAM SECTION* FINISH POINT	APPROX. START TIME	AMB. AIR TEMP.	WELD TECH.	PREHEAT OR MACH. SPEED	MACHINE TEMPERATURES DIGITAL SET WEDGE OR BARREL NOZZLE	MACHINE TEMPERATURES INDICATOR WEDGE OR BARREL NOZZLE	APPROX. LENGTH WELDED	LENGTH FROM PREVIOUS DESTR.	DESTR. NUMBER	MON.	REMARKS	** NON-DESTRUCTIVE TEST DATE	** NON-DESTRUCTIVE MON.
1	E16 / STI	EEOS	WEOS	930	63	MN	260	260	-	20	20		SC		CAP	SC
2	E16 / WTI	SEOS	NEOS	940	63	MN	260	260	-	48	68		SC		5/5/2016	SC
3	E11 / WTI	NEOS	SEOS	1315	64	MN	260	260	-	22	90		SC		5/5/2016	SC
4	E14 / STI	EEOS	WEOS	1430	64	MN	260	260	-	24	114		SC		5/5/2016	SC
5	/	-							-							
6	/	-							-							
7	/	-							-							
8	/	-							-							
9	/	-							-							
10	/	-							-							
11	/	-							-							
12	/	-							-							
13	/	-							-							
14	/	-							-							
15	/	-							-							
16	/	-							-							
17	/	-							-							
								DAILY TOTAL			114					

* REFERENCE SEAM ENDPOINTS FROM AN END OF SEAM (EOS), A REPAIR NUMBER, OR A POINT LOCATION ON THE SEAM.

DESTRUCTIVE LENGTH CARRY-OVER: 114

** COLUMNS TO BE USED BY THE DATA REVIEWER ONLY

GCS FORM: G13
(JUNE 1992)

REVIEWED BY: SC DATE: 5/11/2016

GOLDER ASSOCIATES

GEOMEMBRANE SEAM LOG

PROJECT NUMBER: 130 2962CQA
PROJECT TITLE: OU3 RA Construction
OWNER: Solutia AL
Area E
LOCATION: Anniston AL
CONTRACTOR: Taylor

[ ] FUSION
[X] EXTRUSION

PASSING TRIAL SEAMS

NO.	TIME	TECH ID
TX01	740	MN

DATE 3/26/2016

MACHINE # 51

DESTRUCTIVE LENGTH CARRY-OVER FROM PREVIOUS LOG 200

SHEET NUMBER 1/1

	SEAM NUMBER	SEAM SECTION* START POINT	SEAM SECTION* FINISH POINT	APPROX. START TIME	AMB. AIR TEMP.	WELD TECH.	PREHEAT OR MACH. SPEED	MACHINE TEMPERATURES DIGITAL SET WEDGE OR BARREL NOZZLE	MACHINE TEMPERATURES INDICATOR WEDGE OR BARREL NOZZLE	APPROX. LENGTH WELDED	LENGTH FROM PREVIOUS DESTR.	DESTR. NUMBER	MON.	REMARKS	** NON-DESTRUCTIVE TEST DATE	** NON-DESTRUCTIVE MON.
1	E10 / WTI	SEOS	NEOS	840	55	MN	250	250 -	-	22	228		SC		3/28/2016	SC
2	E9 / WTI	SEOS	NEOS	905	55	MN	250	250 -	-	22	258		SC		3/28/2016	SC
3	E7 / WTI	EEOS	WEOS	950	55	MN	250	250 -	-	22	280		SC		3/28/2016	SC
4	E8 / STI	EEOS	WEOS	927	55	MN	250	250 -	-	50	330		SC		3/28/2016	SC
5	E8 / WTI	SEOS	NEOS	955	59	MN	250	250 -	-	11	341		SC		3/28/2016	SC
6	E6 / WTI	SEOS	NEOS	1006	59	MN	250	250 -	-	22	367		SC		3/28/2016	SC
7	E5 / WTI	SEOS	NEOS	1016	59	MN	250	250 -	-	22	393		SC		3/28/2016	SC
8	E3 / WTI	SEOS	NEOS	1030	59	MN	250	250 -	-	22	419		SC		3/28/2016	SC
9	E2 / WTI	SEOS	NEOS	1050	59	MN	250	250 -	-	18	450		SC		3/28/2016	SC
10	E2 / NTI	SEOS	NEOS	1110	59	MN	250	250 -	-	21	471		SC		3/28/2016	SC
11	E2 / WTI	SEOS	NEOS	1130	59	MN	250	250 -	-	3	488		SC		3/28/2016	SC
12	E1 / WTI	SEOS	NEOS	1130	59	MN	250	250 -	-	15	503		SC		3/28/2016	SC
13	E1 / NTI	WEOS	EEOS	1146	59	MN	250	250 -	-	70	573		SC		3/28/2016	SC
14	/	-						-	-							
15	/	-						-	-							
16	/	-						-	-							
17	/	-						-	-							
								DAILY TOTAL		320						
								DESTRUCTIVE LENGTH CARRY-OVER			573					

* REFERENCE SEAM ENDPOINTS FROM AN END OF SEAM (EOS), A REPAIR NUMBER, OR A POINT LOCATION ON THE SEAM.

** COLUMNS TO BE USED BY THE DATA REVIEWER ONLY

GCS FORM: G13
(JUNE 1992)

REVIEWED BY: KMG DATE: 3/28/2016

GOLDER ASSOCIATES

GEOMEMBRANE SEAM LOG

PROJECT NUMBER: 130 2962CQA
PROJECT TITLE: OU3 RA Construction
OWNER: Solutia AL
Area E
LOCATION: Anniston AL
CONTRACTOR: Taylor

[x] FUSION
[ ] EXTRUSION

PASSING TRIAL SEAMS

NO.	TIME	TECH ID
TF01	1113	MB

DESTRUCTIVE LENGTH CARRY-OVER FROM PREVIOUS LOG: 0

DATE: 3/23/2016

MACHINE # 516

SHEET NUMBER: `1/1

	SEAM NUMBER	SEAM SECTION* START POINT	SEAM SECTION* FINISH POINT	APPROX. START TIME	AMB. AIR TEMP.	WELD TECH.	PREHEAT OR MACH. SPEED	MACHINE TEMPERATURES DIGITAL SET WEDGE OR BARREL NOZZLE	MACHINE TEMPERATURES INDICATOR WEDGE OR BARREL NOZZLE	APPROX. LENGTH WELDED	LENGTH FROM PREVIOUS DESTR.	DESTR. NUMBER	MON.	REMARKS	** NON-DESTRUCTIVE TEST DATE	** NON-DESTRUCTIVE MON.
1	E14 / E16	SEOS	NEOS	1128	64	MB	4.3	380	-	4	4		SC		CAP	SC
2	E15 / E16	SEOS	NEOS	1130	64	MB	4.3	380	-	22	26		SC		5/5/2016	SC
3	E12 / E16	SEOS	NEOS	1135	64	MB	4.3	380	-	22	48		SC		5/5/2016	SC
4	E11 / E16	EEOS	WEOS	1140	64	MB	4.3	380	-	20	68/0	DSF4	SC	2R	5/5/2016	SC
5	/	-							-							
6	/	-							-							
7	/	-							-							
8	/	-							-							
9	/	-							-							
10	/	-							-							
11	/	-							-							
12	/	-							-							
13	/	-							-							
14	/	-							-							
15	/	-							-							
16	/	-							-							
17	/	-							-							
									DAILY TOTAL							
									DESTRUCTIVE LENGTH CARRY-OVER		0					

* REFERENCE SEAM ENDPOINTS FROM AN END OF SEAM (EOS), A REPAIR NUMBER, OR A POINT LOCATION ON THE SEAM.

** COLUMNS TO BE USED BY THE DATA REVIEWER ONLY

GCS FORM: G13
(JUNE 1992)

REVIEWED BY: SC DATE: 5/11/2016

GOLDER ASSOCIATES

GEOMEMBRANE SEAM LOG

PROJECT NUMBER: 130 2962CQA
PROJECT TITLE: OU3 RA Construction
OWNER: Solutia AL
Area E
LOCATION: Anniston AL
CONTRACTOR: Taylor

[x] FUSION
[ ] EXTRUSION

PASSING TRIAL SEAMS

NO.	TIME	TECH ID
TF01	830	RM
TF02	1249	RM

DATE 3/23/2016

MACHINE # 479

DESTRUCTIVE LENGTH CARRY-OVER FROM PREVIOUS LOG 0

SHEET NUMBER 1/2

	SEAM NUMBER			SEAM SECTION* START POINT	SEAM SECTION* FINISH POINT	APPROX. START TIME	AMB. AIR TEMP.	WELD TECH.	PREHEAT OR MACH. SPEED	MACHINE TEMPERATURES DIGITAL SET WEDGE OR BARREL NOZZLE	MACHINE TEMPERATURES INDICATOR WEDGE OR BARREL NOZZLE	APPROX. LENGTH WELDED	LENGTH FROM PREVIOUS DESTR.	DESTR. NUMBER	MON.	REMARKS	** NON-DESTRUCTIVE TEST DATE	** NON-DESTRUCTIVE MON.
1	E1	/	E2	WEEOS	EEOS	900	51	AM	5.5	385	-	94	94		SC		3/23/2016	SC
2	E2	/	E3	WEEOS	EEOS	918	51	AM	5.5	385	-	124	102/106	DSF1	SC	1D	3/23/2016	SC
3	E4	/	E5	SEOS	NEOS	943	53	AM	5.5	385	-	22	138		SC		3/23/2016	SC
4	E3	/	E5	WEEOS	EEOS	1002	53	AM	5.5	385	-	18	156		SC		3/23/2016	SC
5	E3	/	E4	WEEOS	EEOS	1005	53	AM	5.5	385	-	107	263		SC		3/23/2016	SC
6	E5	/	E6	WEEOS	EEOS	1024	53	AM	5.5	385	-	18	281		SC	1G	3/23/2016	SC
7	E4	/	E6	WEEOS	EEOS	1027	61	AM	5.5	385	-	108	389		SC		3/23/2016	SC
8	E7	/	E8	SEOS	NEOS	1104	61	AM	5.5	385	-	12	401		SC		3/23/2016	SC
9	E6	/	E8	WEEOS	EEOS	1113	61	AM	5.5	385	-	50	451		SC		3/23/2016	SC
10	E6	/	E7	WEEOS	EEOS	1119	61	AM	5.5	385	-	73	500/24	DSF2	SC	1M	3/23/2016	SC
11	E7	/	E9	WEEOS	EEOS	1133	61	AM	5.5	385	-	62	86		SC		3/23/2016	SC
12	E9	/	E10	WEEOS	EEOS	1143	61	AM	5.5	385	-	62	148		SC		3/23/2016	SC
13	E13	/	E14	SEOS	NEOS	1318	68	AM	6.0	385	-	11	159		SC		3/23/2016	SC
14	E10	/	E11	WEEOS	EEOS	1312	68	AM	6.0	385	-	62	221		SC		3/23/2016	SC
15	E11	/	E12	WEEOS	EEOS	1322	68	AM	6.0	385	-	60	281		SC		3/23/2016	SC
16	E12	/	E15	WEEOS	EEOS	1335	68	AM	6.0	385	-	44	325		SC		3/23/2016	SC
17	E14	/	E15	WEEOS	EEOS	1343	68	AM	6.0	385	-	23	348		SC		3/23/2016	SC
										DAILY TOTAL		950						
										DESTRUCTIVE LENGTH CARRY-OVER			348					

* REFERENCE SEAM ENDPOINTS FROM AN END OF SEAM (EOS), A REPAIR NUMBER, OR A POINT LOCATION ON THE SEAM.

** COLUMNS TO BE USED BY THE DATA REVIEWER ONLY

GCS FORM: G13
(JUNE 1992)

REVIEWED BY: KMG DATE: 3/24/2016

GOLDER ASSOCIATES

APPENDIX H2.3

Geomembrane Trial Seam Logs

GEOMEMBRANE TRIAL SEAM LOG

PROJECT NUMBER: 130-2962CQA
PROJECT TITLE: OU3 RA Construction
OWNER: SOLUTIA
AREA E
LOCATION: ANNISTON
CONTRACTOR: TAYLOR

X TF - # = FUSION
X TX - # = EXTRUSION

DATE 3/23/2016
SHEET NUMBER 1/1

SAMPLE NUMBER	APPROX. TIME	WELDING MACHINE NUMBER	WELD TECH.	TEMPERATURES: AMBIENT AIR TEMP.	TEMPERATURES: PREHEAT OR MACHINE SPEED	TEMPERATURES: EXTRUDER	TEMPERATURES: NOZZLE OR WEDGE	TEST RESULTS: INSIDE PEEL MODE STRENGTH	TEST RESULTS: OUTSIDE PEEL MODE STRENGTH	TEST RESULTS: SHEAR MODE STRENGTH	PASS OR FAIL	MON.	REMARKS
TF01	830	479	AM	51	5.5		385	SE1/SE1/SE1 113/100/102	SE1/SE1/SE1 114/102/116	BRK/BRK/BRK 154/151/153	PASS	SC	
TF02	1249	479	AM	68	6.0		385	SE1/SE1/SE1 90/105/103	SE1/SE1/SE1 101/99/108	BRK/BRK/BRK 141/144/142	PASS	SC	
TX01	1400	51	BH	68		250	250	SE3/SE3/SE3 93/67/68	/ / / /	BRK/BRK/BRK 130/127/129	PASS	SC	
TX02	1435	51	MN	68		250	250	SE3/SE3/SE3 119/117/113	/ / / /	BRK/BRK/BRK 122/120/126	PASS	SC	
								/ / / /	/ / / /	/ /			
								/ / / /	/ / / /	/ /			
								/ / / /	/ / / /	/ /			
								/ / / /	/ / / /	/ /			
								/ / / /	/ / / /	/ /			
								/ / / /	/ / / /	/ /			
								/ / / /	/ / / /	/ /			
								/ / / /	/ / / /	/ /			
								/ / / /	/ / / /	/ /			

GCS FORM: G12
(JUNE 1992)

REVIEWED BY: KMG DATE: 3/24/2016

GOLDER ASSOCIATES

GEOMEMBRANE TRIAL SEAM LOG

PROJECT NUMBER: 130-2962CQA
PROJECT TITLE: OU3 RA Construction
OWNER: SOLUTIA
AREA E
LOCATION: ANNISTON
CONTRACTOR: TAYLOR

X TF - # = FUSION
TX - # = EXTRUSION

DATE 3/24/2016
SHEET NUMBER 1/1

SAMPLE NUMBER	APPROX. TIME	WELDING MACHINE NUMBER	WELD TECH.	TEMPERATURES: AMBIENT AIR TEMP.	TEMPERATURES: PREHEAT OR MACHINE SPEED	TEMPERATURES: EXTRUDER	TEMPERATURES: NOZZLE OR WEDGE	TEST RESULTS: INSIDE PEEL MODE STRENGTH	TEST RESULTS: OUTSIDE PEEL MODE STRENGTH	TEST RESULTS: SHEAR MODE STRENGTH	PASS OR FAIL	MON.	REMARKS
								SE3/SE3/SE3	/ /	BRK/BRK/BRK			
TX01	855	51	RC	58		250	250	87/115/109	/ /	137/144/141	PASS	SC	
								SE3/SE3/SE3	/ /	BRK/BRK/BRK			
TX02	855	51	MN	58		250	250	85/90/96	/ /	147/142/140	PASS	SC	
								/ /	/ /	/			
								/ /	/ /	/			
								/ /	/ /	/			
								/ /	/ /	/			
								/ /	/ /	/			
								/ /	/ /	/			
								/ /	/ /	/			
								/ /	/ /	/			
								/ /	/ /	/			
								/ /	/ /	/			
								/ /	/ /	/			
								/ /	/ /	/			
								/ /	/ /	/			
								/ /	/ /	/			
								/ /	/ /	/			
								/ /	/ /	/			
								/ /	/ /	/			
								/ /	/ /	/			
								/ /	/ /	/			
								/ /	/ /	/			
								/ /	/ /	/			

REVIEWED BY: KMG DATE: 3/25/2016

GCS FORM: G12
(JUNE 1992)

GOLDER ASSOCIATES

GEOMEMBRANE TRIAL SEAM LOG

PROJECT NUMBER: 130-2962CQA
PROJECT TITLE: OU3 RA Construction
OWNER: SOLUTIA
LOCATION: ANNISTON
CONTRACTOR: TAYLOR

[ ] TF - # = FUSION
[X] TX - # = EXTRUSION

DATE 3/26/2016
SHEET NUMBER 1/1

SAMPLE NUMBER	APPROX. TIME	WELDING MACHINE NUMBER	WELD TECH.	TEMPERATURES: AMBIENT AIR TEMP.	TEMPERATURES: PREHEAT OR MACHINE SPEED	TEMPERATURES: EXTRUDER	TEMPERATURES: NOZZLE OR WEDGE	TEST RESULTS: INSIDE PEEL MODE STRENGTH	TEST RESULTS: OUTSIDE PEEL MODE STRENGTH	TEST RESULTS: SHEAR MODE STRENGTH	PASS OR FAIL	MON.	REMARKS
								SE3/SE3/SE3	/ /	BRK/BRK/BRK			
TX01	740	51	MN	53		250	250	100/113/132	/ /	145/144/141	PASS	SC	
								SE3/SE3/SE3	/ /	BRK/BRK/BRK			
TX02	740	51	RC	53		250	250	129/96/101	/ /	139/137/129	PASS	SC	
								SE3/SE3/SE3	/ /	BRK/BRK/BRK			
TX03	750	62	IB	53		250	250	121/92/109	/ /	133/131/133	PASS	SC	
								/ /	/ /	/			
								/ /	/ /	/			
								/ /	/ /	/	

GEOMEMBRANE TRIAL SEAM LOG

PROJECT NUMBER: 130-2962CQA
PROJECT TITLE: OU3 RA Construction
OWNER: SOLUTIA
LOCATION: ANNISTON
CONTRACTOR: TAYLOR

[ ] TF - # = FUSION
[X] TX - # = EXTRUSION

DATE 3/28/2016
SHEET NUMBER 1/1

SAMPLE NUMBER	APPROX. TIME	WELDING MACHINE NUMBER	WELD TECH.	TEMPERATURES: AMBIENT AIR TEMP.	TEMPERATURES: PREHEAT OR MACHINE SPEED	TEMPERATURES: EXTRUDER	TEMPERATURES: NOZZLE OR WEDGE	TEST RESULTS: INSIDE PEEL MODE STRENGTH	TEST RESULTS: OUTSIDE PEEL MODE STRENGTH	TEST RESULTS: SHEAR MODE STRENGTH	PASS OR FAIL	MON.	REMARKS
								SE3/SE3/SE3	/ /	BRK/BRK/BRK			
TX01	1250	62	IB	65		250	250	79/87/91	/ /	92/95/101	PASS	SC	
								/ /	/ /	/ /			
								/ /	/ /	/ /			
								/ /	/ /	/ /			
								/ /	/ /	/ /			
								/ /	/ /	/ /			
								/ /	/ /	/ /			
								/ /	/ /	/ /			
								/ /	/ /	/ /			
								/ /	/ /	/ /			
								/ /	/ /	/ /			
								/ /	/ /	/ /			
								/ /	/ /	/ /			
								/ /	/ /	/ /			
								/ /	/ /	/ /			
								/ /	/ /	/ /			
								/ /	/ /	/ /			
								/ /	/ /	/ /			

GCS FORM: G12
(JUNE 1992)

REVIEWED BY: KMG DATE: 3/28/2016

GOLDER ASSOCIATES

GEOMEMBRANE TRIAL SEAM LOG

PROJECT NUMBER: 130-2962CQA
PROJECT TITLE: OU3 RA Construction
OWNER: SOLUTIA
LOCATION: ANNISTON
CONTRACTOR: TAYLOR

X TF - # = FUSION
X TX - # = EXTRUSION

DATE 5/5/2016
SHEET NUMBER 1/1

SAMPLE NUMBER	APPROX. TIME	WELDING MACHINE NUMBER	WELD TECH.	TEMPERATURES: AMBIENT AIR TEMP.	TEMPERATURES: PREHEAT OR MACHINE SPEED	TEMPERATURES: EXTRUDER	TEMPERATURES: NOZZLE OR WEDGE	TEST RESULTS: INSIDE PEEL MODE STRENGTH	TEST RESULTS: OUTSIDE PEEL MODE STRENGTH	TEST RESULTS: SHEAR MODE STRENGTH	PASS OR FAIL	MON.	REMARKS
								SE3/SE3/SE3	/ /	BRK/BRK/BRK			
TX01	910	53	MN	63		260	260	112/120/104	/ /	143/133/131	PASS	SC	
								SE1/SE1/SE1	SE1/SE1/SE1	BRK/BRK/BRK			
TF01	1113	516	MB	64	4.3		380	97/111/114	109/110/103	134/133/132	PASS	SC	
								/ /	/ /	/ /			
								/ /	/ /	/ /			
								/ /	/ /	/			
								/ /	/ /	/			
								/ /	/ /	/			
								/ /	/ /	/			
								/ /	/ /	/			
								/ /	/ /	/			
								/ /	/ /	/			
								/ /	/ /	/			
								/ /	/ /	/			
								/ /	/ /	/			
								/ /	/ /	/			
								/ /	/ /	/			
								/ /	/ /	/			
								/ /	/ /	/			
								/ /	/ /	/			
								/ /	/ /	/			

GCS FORM: G12
(JUNE 1992)

REVIEWED BY: KMG DATE: 3/28/2016

GOLDER ASSOCIATES

APPENDIX H2.4

Geomembrane Vacuum Test Logs

GEOMEMBRANE SEAM VACUUM TEST LOG

PROJECT NUMBER: 130 2962CQA
PROJECT TITLE: OU3 RA Construction
OWNER: Solutia
AREA E
LOCATION: Anniston AL
CONTRACTOR: Taylor
VACUUM BOX NUMBER _____ **SHEET NUMBER** 1/1

SEAMS

	SEAM NUMBER	SEAM SECTION * FROM	TO	TEST DATE	TECH ID	DEFECTS * *	SEAM COMPLETE NO	YES	OBS. TEST	MON.	REMARKS
1	/	-						|			
2	/	-						|			
3	/	-						|			
4	/	-						|			
5	/	-						|			
6	/	-						|			
7	/	-						|			
8	/	-						|			
9	/	-						|			
10	/	-						|			
11	/	-						|			
12	/	-						|			
13	/	-						|			
14	/	-						|			
15	/	-						|			
16	/	-						|			
17	/	-						|			
18	/	-						|			
19	/	-						|			
20	/	-						|			

REPAIRS

	DEFECT CODE	TEST DATE	TECH ID	DEFECTS * *	OBS. TEST	MON.	REMARKS
21	1D	3/26/2016	JL	NONE	YES	SC	
22	1E	3/26/2016	JL	NONE	YES	SC	
23	1G	3/26/2016	JL	NONE	YES	SC	
24	1F	3/26/2016	JL	NONE	YES	SC	
25	1J	3/26/2016	AM	NONE	YES	SC	
26	1M	3/26/2016	AM	NONE	YES	SC	
27	1N	3/26/2016	AM	NONE	YES	SC	
28	1Q	3/26/2016	AM	NONE	YES	SC	
29	1R	3/26/2016	AM	NONE	YES	SC	
30	1S	3/26/2016	AM	NONE	YES	SC	
31	1H	3/26/2016	JL	NONE	YES	SC	
32	1B	3/26/2016	JL	NONE	YES	SC	
33	1K	3/26/2016	JL	NONE	YES	SC	
34							
35							
36							
37							
38							
39							
40							

* REFERENCE SEAM ENDPOINTS FROM AN END OF PANEL (EDP), A REPAIR NUMBER,
OR A POINT LOCATION ON THE PANEL (i e, REFERENCE POINT, DISTANCE, DIRECTION FROM REF. PT.)

* * RECORD QUANTITY OF LEAKS DETECTED AND REFERENCE NEW DEFECT CODE IN REMARKS.

REVIEWED BY: KMG **DATE** 3/28/2016

GCS FORM: G17
(JUNE 1992)

GOLDER ASSOCIATES

GEOMEMBRANE SEAM VACUUM TEST LOG

PROJECT NUMBER: 130 2962CQA
PROJECT TITLE: OU3 RA Construction
OWNER: Solutia
AREA E
LOCATION: Anniston AL
CONTRACTOR: Taylor
VACUUM BOX NUMBER _____ **SHEET NUMBER** 1/2

SEAMS

	SEAM NUMBER	SEAM SECTION * FROM	SEAM SECTION * TO	TEST DATE	TECH ID	DEFECTS * *	SEAM COMPLETE NO	SEAM COMPLETE YES	OBS. TEST	MON.	REMARKS
1	E10 / WTI	SEOS	NEOS	3/28/2016	JL	NONE		X	YES	SC	
2	E9 / WTI	SEOS	NEOS	3/28/2016	JL	NONE		X	YES	SC	
3	E7 / W&STI	SEOS	NEOS	3/28/2016	JL	NONE		X	YES	SC	
4	E8 / STI	EEOS	WEOS	3/28/2016	JL	NONE		X	YES	SC	
5	E8 / WTI	SEOS	NEOS	3/28/2016	SC	NONE		X	YES	SC	
6	E6 / WTI	SEOS	NEOS	3/28/2016	SC	NONE		X	YES	SC	
7	E5 / WTI	SEOS	NEOS	3/28/2016	SC	NONE		X	YES	SC	
8	E3 / WTI	SEOS	NEOS	3/28/2016	SC	NONE		X	YES	SC	
9	E2 / WTI	SEOS	NEOS	3/28/2016	SC	NONE		X	YES	SC	
10	E2 / NTI	WEOS	EEOS	3/28/2016	SC	NONE		X	YES	SC	
11	E2 / WTI	SEOS	NEOS	3/28/2016	SC	NONE		X	YES	SC	
12	E1 / WTI	SEOS	NEOS	3/28/2016	SC	NONE		X	YES	SC	
13	E1 / NTI	NEOS	SEOS	3/28/2016	SC	NONE		X	YES	SC	
14	E1 / ETI	NEOS	SEOS	3/28/2016	SC	NONE		X	YES	SC	
15	E2 / ETI	NEOS	SEOS	3/28/2016	SC	NONE		X	YES	SC	
16	E3 / ETI	NEOS	SEOS	3/28/2016	SC	NONE		X	YES	SC	
17	E4 / ETI	NEOS	SEOS	3/28/2016	SC	NONE		X	YES	SC	
18	E6 / ETI	NEOS	SEOS	3/28/2016	SC	NONE		X	YES	SC	
19	E7 / ETI	NEOS	SEOS	3/28/2016	SC	NONE		X	YES	SC	
20	E9 / ETI	NEOS	SEOS	3/28/2016	SC	NONE		X	YES	SC	

REPAIRS

	DEFECT CODE	TEST DATE	TECH ID	DEFECTS * *	OBS. TEST	MON.	REMARKS
21	1T	3/28/2016	JL	NONE	YES	SC	
22	1W	3/28/2016	JL	NONE	YES	SC	
23	1X	3/28/2016	JL	NONE	YES	SC	
24	2A	3/28/2016	JL	NONE	YES	SC	
25	2B	3/28/2016	JL	NONE	YES	SC	
26	2D	3/28/2016	JL	NONE	YES	SC	
27	2E	3/28/2016	JL	NONE	YES	SC	
28	1C	3/28/2016	JL	NONE	YES	SC	
29	2G	3/28/2016	JL	NONE	YES	SC	
30	2H	3/28/2016	JL	NONE	YES	SC	
31	2C	3/28/2016	JL	NONE	YES	SC	
32	1A	3/28/2016	JL	NONE	YES	SC	
33	2F	3/28/2016	JL	NONE	YES	SC	
34	1P	3/28/2016	JL	NONE	YES	SC	
35	2I	3/28/2016	JL	NONE	YES	SC	
36	2J	3/28/2016	JL	NONE	YES	SC	
37	2K	3/28/2016	JL	NONE	YES	SC	
38							
39							
40							

* REFERENCE SEAM ENDPOINTS FROM AN END OF PANEL (EDP), A REPAIR NUMBER,
OR A POINT LOCATION ON THE PANEL (i e, REFERENCE POINT, DISTANCE, DIRECTION FROM REF. PT.)

* * RECORD QUANTITY OF LEAKS DETECTED AND REFERENCE NEW DEFECT CODE IN REMARKS.

REVIEWED BY: KMG **DATE** 3/28/2016

GCS FORM: G17
(JUNE 1992)

GOLDER ASSOCIATES

GEOMEMBRANE SEAM VACUUM TEST LOG

PROJECT NUMBER: 130 2962CQA
PROJECT TITLE: OU3 RA Construction
OWNER: Solutia
AREA E
LOCATION: Anniston AL
CONTRACTOR: Taylor
VACUUM BOX NUMBER _____ **SHEET NUMBER** 2/2

SEAMS

	SEAM NUMBER	SEAM SECTION * FROM	SEAM SECTION * TO	TEST DATE	TECH ID	DEFECTS * *	SEAM COMPLETE NO	SEAM COMPLETE YES	OBS. TEST	MON.	REMARKS
1	E10 / ETI	NEOS	SEOS	3/28/2016	JL	NONE		X	YES	SC	
2	E11 / ETI	NEOS	SEOS	3/28/2016	JL	NONE		X	YES	SC	
3	E15 / ETI	NEOS	SEOS	3/28/2016	JL	NONE		X	YES	SC	
4	E12 / ETI	NEOS	SEOS	3/28/2016	JL	NONE		X	YES	SC	
5	E13 / ETI	NEOS	SEOS	3/28/2016	JL	NONE		X	YES	SC	
6	E13 / STI	EEOS	WEOS	3/28/2016	JL	NONE		X	YES	SC	
7	/	-									
8	/	-									
9	/	-									
10	/	-									
11	/	-									
12	/	-									
13	/	-									
14	/	-									
15	/	-									
16	/	-									
17	/	-									
18	/	-									
19	/	-									
20	/	-									

REPAIRS

	DEFECT CODE	TEST DATE	TECH ID	DEFECTS * *	OBS. TEST	MON.	REMARKS
21							
22							
23							
24							
25							
26							
27							
28							
29							
30							
31							
32							
33							
34							
35							
36							
37							
38							
39							
40							

* REFERENCE SEAM ENDPOINTS FROM AN END OF PANEL (EDP), A REPAIR NUMBER,
OR A POINT LOCATION ON THE PANEL (i e, REFERENCE POINT, DISTANCE, DIRECTION FROM REF. PT.)

* * RECORD QUANTITY OF LEAKS DETECTED AND REFERENCE NEW DEFECT CODE IN REMARKS.

REVIEWED BY: KMG DATE 3/28/2016

GCS FORM: G17
(JUNE 1992)

GOLDER ASSOCIATES

GEOMEMBRANE SEAM VACUUM TEST LOG

PROJECT NUMBER: 130 2962CQA
PROJECT TITLE: OU3 RA Construction
OWNER: Solutia
AREA E
LOCATION: Anniston AL
CONTRACTOR: Taylor
VACUUM BOX NUMBER _____ **SHEET NUMBER** 1/1

SEAMS

	SEAM NUMBER	SEAM SECTION * FROM	TO	TEST DATE	TECH ID	DEFECTS * *	SEAM COMPLETE NO	YES	OBS. TEST	MON.	REMARKS
1	E16 / STI	EEOS -	WEOS	5/5/2016	MG	NONE		YES	Y	SC	
2	E16 / WTI	SEOS -	NEOS	5/5/2016	MG	NONE		YES	Y	SC	
3	E11 / WTI	NEOS -	SEOS	5/5/2016	MG	NONE		YES	Y	SC	
4	E14 / STI	WEOS -	WEOS	5/5/2016	MG	NONE		YES	Y	SC	
5	/	-									
6	/	-									
7	/	-									
8	/	-									
9	/	-									
10	/	-									
11	/	-									
12	/	-									
13	/	-									
14	/	-									
15	/	-									
16	/	-									
17	/	-									
18	/	-									
19	/	-									
20	/	-									

REPAIRS

	DEFECT CODE	TEST DATE	TECH ID	DEFECTS * *	OBS. TEST	MON.	REMARKS
21	2R	5/5/2016	MG	NONE	YES	SC	
22	2S	5/5/2016	MG	NONE	YES	SC	
23	2M	5/5/2016	MG	NONE	YES	SC	
24	2P	5/5/2016	MG	NONE	YES	SC	
25	2N	5/5/2016	MG	NONE	YES	SC	
26							
27							
28							
29							
30							
31							
32							
33							
34							
35							
36							
37							
38							
39							
40							

* REFERENCE SEAM ENDPOINTS FROM AN END OF PANEL (EDP), A REPAIR NUMBER,
OR A POINT LOCATION ON THE PANEL (i e, REFERENCE POINT, DISTANCE, DIRECTION FROM REF. PT.)

* * RECORD QUANTITY OF LEAKS DETECTED AND REFERENCE NEW DEFECT CODE IN REMARKS.

REVIEWED BY: KMG **DATE** 3/28/2016

GCS FORM: G17
(JUNE 1992)

GOLDER ASSOCIATES

APPENDIX H2.5

Geomembrane Seam Pressure Test Logs

GEOMEMBRANE SEAM PRESSURE TEST LOG

PROJECT NUMBER: 130 29G2CQA
PROJECT TITLE: OU3 RA Construction
OWNER: Solutia
Area E
LOCATION: Anniston AL
CONTRACTOR: Taylor

DATE: 3/23/2016
SHEET NUMBER: 1/2

	SEAM NUMBER	SEAM SECTION * FROM	SEAM SECTION * TO	PRESS. GAUGE NUMBER	TECH ID	TIME START	TIME FINISH	PRESSURE INITIAL	PRESSURE FINAL	OBS. TEST	RESULTS PASS/ FAIL	SEAM COMPLETE NO	SEAM COMPLETE YES	MON.	REMARKS
1	E4 / E5	NEOS	1G	2	MN	955	1000	32	32	Y	PASS	X		SC	
2	E4 / E5	1D	SEOS	2	MN	1010	1015	32	32	Y	PASS		X	SC	
3	E7 / E8	SEOS	1J	2	MN	1020	1025	32	32	Y	PASS		X	SC	Cap to NEOS 2'
4	E1 / E2	WEEOS	1A	-	-	-	-	-	-	N	-	X	-	SC	Cap to WEOS
5	E1 / E2	1A	1B	2	MN	1102	1107	31	31	N	PASS	X		SC	
6	E1 / E2	1B	EEOS	2	MN	1136	1141	33	33	N	PASS		X	SC	
7	E2 / E3	WEOS	1C	-	-	-	-	-	-	Y	-	X		SC	Cap to WEOS
8	E2 / E3	1C	EEOS	2	MN	1141	1146	31	31	Y	PASS		X	SC	
9	E3 / E14	SEOS	NEOS	2	MN	1308	1313	30	28	Y	PASS		X	SC	
10	E3 / E5	WEEOS	EEEOS	2	GC	1328	1333	31	30	Y	PASS		X	SC	
11	E3 / E4	WEOS	1H	2	GC	1328	1333	31	30	Y	PASS	X		SC	
12	E5 / E6	WEEOS	EEEOS	2	GC	1341	1346	33	33	Y	PASS		X	SC	
13	E4 / E6	WEEOS	EEEOS	2	GC	1346	1351	32	32	Y	PASS		X	SC	
14	E3 / E4	1H	EEEOS	2	GC	1421	1426	33	33	Y	PASS		X	SC	
15	E6 / E7	EEOS	1M	1	BJ	1441	1446	31	31	N	PASS	X		SC	
16	E6 / E7	1M	WEOS	6	KT	1442	1447	34	33	N	PASS		X	SC	
17	E6 / E8	EEOS	WEOS	6	KT	1442	1447	34	33	N	PASS		X	SC	
18	E7 / E9	EEOS	WEOS	1	BJ	1449	1454	32	32	N	PASS		X	SC	
19	E9 / E10	EEOS	WEOS	6	BJ	1453	1458	32	32	N	PASS		X	SC	
20	/														

* REFERENCE SEAM ENDPOINTS FROM AND END OF SEAM (EOS), A REPAIR NUMBER,
OR A POINT LOCATION ON THE SEAM (i e, REFERENCE POINT, DISTANCE, DIRECTION FROM REF. PT.)

GCS FORM: G16
(JUNE 1992)

REVIEWED BY: KMG DATE: 3/24/2016

GOLDER ASSOCIATES

GEOMEMBRANE SEAM PRESSURE TEST LOG

PROJECT NUMBER: 130 29G2CQA
PROJECT TITLE: OU3 RA Construction
OWNER: Solutia
Area E
LOCATION: Anniston AL
CONTRACTOR: Taylor

DATE: 3/23/2016
SHEET NUMBER: 2/2

	SEAM NUMBER	SEAM SECTION * FROM	TO	PRESS. GAUGE NUMBER	TECH ID	TIME START	FINISH	PRESSURE INITIAL	FINAL	OBS. TEST	RESULTS PASS/ FAIL	SEAM COMPLETE NO	YES	MON.	REMARKS
1	E10 / E11	EEOS -	WEOS	1	BJ	1456 :	1501	32 :	32	Y	PASS		X	SC	
2	E11 / E12	EEOS -	1Q	2	BJ	1500 :	1505	30 :	30	Y	PASS	X		SC	
3	E11 / E12	1Q -	WEOS	6	BJ	1502 :	1507	30 :	30	Y	PASS		X	SC	
4	E12 / E15	EEOS -	WEOS	1	BJ	1505 :	1510	33 :	33	Y	PASS		X	SC	
5	E13 / E15	EEOS -	WEOS	2	BJ	1520 :	1550	32 :	32	Y	PASS		X	SC	
6	E14 / E15	EEOS -	WEOS	1	BJ	1521 :	1526	35 :	35	Y	PASS		X	SC	
7	/	-				:		:							
8	/	-				:		:							
9	/	-				:		:							
10	/	-				:		:							
11	/	-				:		:							
12	/	-				:		:							
13	/	-				:		:							
14	/	-				:		:							
15	/	-				:		:							
16	/	-				:		:							
17	/	-				:		:							
18	/	-				:		:							
19	/	-				:		:							
20	/	0				:		:							

* REFERENCE SEAM ENDPOINTS FROM AND END OF SEAM (EOS), A REPAIR NUMBER,
OR A POINT LOCATION ON THE SEAM (i e, REFERENCE POINT, DISTANCE, DIRECTION FROM REF. PT.)

GCS FORM: G16
(JUNE 1992)

REVIEWED BY: KMG DATE: 3/24/2016

GOLDER ASSOCIATES

GEOMEMBRANE SEAM PRESSURE TEST LOG

PROJECT NUMBER: 1302962CQA
PROJECT TITLE: OU3 RA Construction
OWNER: Solutia
LOCATION: Anniston AL
CONTRACTOR: Taylor

DATE: 5/5/2016
SHEET NUMBER: 1

	SEAM NUMBER	SEAM SECTION * FROM	SEAM SECTION * TO	PRESS. GAUGE NUMBER	TECH ID	TIME START	TIME FINISH	PRESSURE INITIAL	PRESSURE FINAL	OBS. TEST	RESULTS PASS/ FAIL	SEAM COMPLETE NO	SEAM COMPLETE YES	MON.	REMARKS
1	E12 / E16	NEOS	SEOS	1	MN	1140	1145	30	30	Y	PASS		X	SC	
2	E15 / E16	NEOS	SEOS	1	MN	1140	1145	30	30	Y	PASS		X	SC	
3	E14 / E16	-	-	-	-	-	-	-	-	-	-	-	-	SC	CAP Seam
4	E11 / E16	WEOS	EEOS	1	MN	1148	1153	32	32	Y	PASS		X	SC	CAP
5	/		-			:		:							
6	/		-			:		:							
7	/		-			:		:							
8	/		-			:		:							
9	/		-			:		:							
10	/		-			:		:							
11	/		-			:		:							
12	/		-			:		:							
13	/		-			:		:							
14	/		-			:		:							
15	/		-			:		:							
16	/		-			:		:							
17	/		-			:		:							
18	/		-			:		:							
19	/		-			:		:							
20	/		-			:		:							

* REFERENCE SEAM ENDPOINTS FROM AND END OF SEAM (EOS), A REPAIR NUMBER,
OR A POINT LOCATION ON THE SEAM (i e, REFERENCE POINT, DISTANCE, DIRECTION FROM REF. PT.)

GCS FORM: G16
(JUNE 1992)

REVIEWED BY: SC DATE: 5/11/2016

GOLDER ASSOCIATES

APPENDIX H3

PCB Cells

APPENDIX H3.1

Panel Deployment Logs

GEOSYNTHETIC PANEL DEPLOYMENT LOG

PROJECT NUMBER: 130 2962CQA **PROJECT TITLE:** OU3 RA Construction
OWNER: Solutia **CONTRACTOR:** Taylor
LOCATION: Anniston AL

GEOMEMBRANE: Secondary Primary **Closure** Other:
SUBGRADE CONDITION: (**Surface Compaction** Protrusions Dessiccation Excessive Moisture)
REMARKS:

TRANSPORT EQUIPMENT: **Front End loader**

PANEL #	ROLL NUMBER	DEPLY'D LENGTH	AMBIENT AIR TEMP	OBS'D OVERLAP	MONITOR	REMARKS
P1	**3106**	**420**	**75**	**6"**	**SC**	
P2	**3078**	**310**	**75**	**6"**	**SC**	
P3	**3078**	**44**	**75**	**6"**	**SC**	
P4	**3078**	**52**	**75**	**6"**	**SC**	
P5	**3078**	**81**	**75**	**6"**	**SC**	
P6	**3078**	**307**	**75**	**6"**	**SC**	
P7	**3106**	**150**	**75**	**6"**	**SC**	
P8	**3106**	**121**	**75**	**6"**	**SC**	
P9	**3079**	**353**	**75**	**6"**	**SC**	
P10	**3079**	**345**	**75**	**6"**	**SC**	
P11	**3081**	**132**	**75**	**6"**	**SC**	
P12	**3081**	**475**	**75**	**6"**	**SC**	

Golder Form: G2-TSS
(August 2000)

REVIEWED BY: **KMG** **DATE:** **11/4/2015**

GOLDER ASSOCIATES INC.

GEOSYNTHETIC PANEL DEPLOYMENT LOG

PROJECT NUMBER: 130 2962CQA **PROJECT TITLE:** OU3 RA Construction
OWNER: Solutia **CONTRACTOR:** Taylor
LOCATION: Anniston AL

GEOMEMBRANE: Secondary Primary **Closure** Other:
SUBGRADE CONDITION: (**Surface Compaction** Protrusions Dessiccation Excessive Moisture)
REMARKS:

TRANSPORT EQUIPMENT: **Front End loader**

PANEL #	ROLL NUMBER	DEPLY'D LENGTH	AMBIENT AIR TEMP	OBS'D OVERLAP	MONITOR	REMARKS
P13	**3081**	**90**	**44**	**6"**	**SC**	
P14	**3070**	**384**	**44**	**6"**	**SC**	
P15	**3070**	**159**	**48**	**6"**	**SC**	
P16	**3071**	**306**	**48**	**6"**	**SC**	
P17	**3070**	**416**	**62**	**6"**	**SC**	
P18	**3070**	**75**	**62**	**6"**	**SC**	
P19	**3096**	**386**	**62**	**6"**	**SC**	
P20	**3096**	**306**	**67**	**6"**	**SC**	
P21	**3095**	**139**	**67**	**6"**	**SC**	
P22	**3095**	**442**	**67**	**6"**	**SC**	
P23	**3095**	**115**	**67**	**6"**	**SC**	
P24	**3100**	**326**	**67**	**6"**	**SC**	
P25	**3100**	**361**	**67**	**6"**	**SC**	
P26	**3080**	**65**	**67**	**6"**	**SC**	

Golder Form: G2-TSS **REVIEWED BY:** **KMG** **DATE:** **11/4/2015**

(August 2000)

GOLDER ASSOCIATES INC.

GEOSYNTHETIC PANEL DEPLOYMENT LOG

PROJECT NUMBER: 130 2962CQA **PROJECT TITLE:** OU3 RA Construction
OWNER: Solutia **CONTRACTOR:** Taylor
LOCATION: Anniston AL

GEOMEMBRANE: Secondary Primary **Closure** Other:
SUBGRADE CONDITION: (Surface Compaction Protrusions Dessiccation Excessive Moisture)
REMARKS:

TRANSPORT EQUIPMENT: **Front End loader**

PANEL #	ROLL NUMBER	DEPLY'D LENGTH	AMBIENT AIR TEMP	OBS'D OVERLAP	MONITOR	REMARKS
P27	**3080**	**432**	**47**	**6"**	**SC**	
P28	**3080**	**196**	**47**	**6"**	**SC**	
P29	**3093**	**235**	**47**	**6"**	**SC**	
P30	**3093**	**424**	**55**	**6"**	**SC**	
P31	**3082**	**413**	**55**	**6"**	**SC**	

Golder Form: G2-TSS
(August 2000)

REVIEWED BY: **KMG** **DATE:** **11/4/2015**

GOLDER ASSOCIATES INC.

GEOSYNTHETIC PANEL DEPLOYMENT LOG

PROJECT NUMBER: 130 2962CQA **PROJECT TITLE:** OU3 RA Construction
OWNER: Solutia **CONTRACTOR:** Taylor
LOCATION: Anniston AL

GEOMEMBRANE: Secondary Primary **Closure** **Other:** Composite
SUBGRADE CONDITION: (Surface Compaction Protrusions Dessiccation Excessive Moisture)
REMARKS: 10/19/2015

TRANSPORT EQUIPMENT: **Front End loader**

PANEL #	ROLL NUMBER	DEPLY'D LENGTH	AMBIENT AIR TEMP	OBS'D OVERLAP	MONITOR	REMARKS
P32	**3082**	**281**	**44**	**6"**	**SC**	
P33	**3099**	**128**	**44**	**6"**	**SC**	
P34	**3099**	**405**	**44**	**6"**	**SC**	
P35	**3099**	**152**	**49**	**6"**	**SC**	
P36	**3097**	**250**	**49**	**6"**	**SC**	
P37	**3097**	**394**	**49**	**6"**	**SC**	
P38	**3097**	**55**	**60**	**6"**	**SC**	
P39	**3094**	**340**	**60**	**6"**	**SC**	
P40	**3094**	**358**	**60**	**6"**	**SC**	
P41	**3083**	**28**	**60**	**6"**	**SC**	
P42	**3083**	**380**	**60**	**6"**	**SC**	
P43	**3083**	**287**	**60**	**6"**	**SC**	
P44	**3087**	**88**	**60**	**6"**	**SC**	

Golder Form: G2-TSS
(August 2000)

REVIEWED BY: **KMG** **DATE:** **11/4/2015**

GOLDER ASSOCIATES INC.

GEOSYNTHETIC PANEL DEPLOYMENT LOG

PROJECT NUMBER: 130 2962CQA **PROJECT TITLE:** OU3 RA Construction
OWNER: Solutia **CONTRACTOR:** Taylor
LOCATION: Anniston AL

GEOMEMBRANE: Secondary Primary **Closure** **Other:**
SUBGRADE CONDITION: (Surface Compaction Protrusions Dessiccation Excessive Moisture)
REMARKS: 10/20/2015

TRANSPORT EQUIPMENT: **Front End loader**

PANEL #	ROLL NUMBER	DEPLY'D LENGTH	AMBIENT AIR TEMP	OBS'D OVERLAP	MONITOR	REMARKS
P45	**3087**	**373**	**50**	**6"**	**SC**	
P46	**3087**	**225**	**50**	**6"**	**SC**	
P47	**3089**	**145**	**50**	**6"**	**SC**	
P48	**3089**	**367**	**55**	**6"**	**SC**	
P49	**3107**	**160**	**60**	**6"**	**SC**	
P50	**3107**	**206**	**60**	**6"**	**SC**	
P51	**3107**	**357**	**68**	**6"**	**SC**	
P52	**3107**	**132**	**68**	**6"**	**SC**	
P53	**3086**	**225**	**68**	**6"**	**SC**	
P54	**3086**	**345**	**68**	**6"**	**SC**	
P55	**3086**	**127**	**68**	**6"**	**SC**	
P56	**3092**	**204**	**68**	**6"**	**SC**	

Golder Form: G2-TSS **REVIEWED BY:** **KMG** **DATE:** **11/4/2015**

(August 2000)

GOLDER ASSOCIATES INC.

GEOSYNTHETIC PANEL DEPLOYMENT LOG

PROJECT NUMBER: 130 2962CQA **PROJECT TITLE:** OU3 RA Construction
OWNER: Solutia **CONTRACTOR:** Taylor
LOCATION: Anniston AL

GEOMEMBRANE: Secondary Primary Closure **Other:** Composite
SUBGRADE CONDITION: (Surface Compaction Protrusions Dessiccation Excessive Moisture)
REMARKS: 10/21/2015

TRANSPORT EQUIPMENT: **Front End loader**

PANEL #	ROLL NUMBER	DEPLY'D LENGTH	AMBIENT AIR TEMP	OBS'D OVERLAP	MONITOR	REMARKS
P57	**3092**	**297**	**50**	**6"**	**SC**	
P58	**3092**	**73**	**50**	**6"**	**SC**	
P59	**3104**	**192**	**50**	**6"**	**SC**	
P60	**3104**	**235**	**60**	**6"**	**SC**	
P61	**3104**	**204**	**60**	**6"**	**SC**	
P62	**3104**	**162**	**60**	**6"**	**SC**	
P63	**3104**	**49**	**60**	**6"**	**SC**	
P64	**3104**	**29**	**60**	**6"**	**SC**	

Golder Form: G2-TSS
(August 2000)

REVIEWED BY: _____ **DATE:** _____

GOLDER ASSOCIATES INC.

APPENDIX H3.2

Geomembrane Seam Logs

GEOMEMBRANE SEAM LOG

PROJECT NUMBER: 130 2962CQA
PROJECT TITLE: OU3 RA Construction
OWNER: Solutia AL
LOCATION: Anniston AL
CONTRACTOR: Taylor

		PASSING TRIAL SEAMS NO.	TIME	TECH ID
X	FUSION	TF01	0724	JA
	EXTRUSION			

DESTRUCTIVE LENGTH CARRY-OVER FROM PREVIOUS LOG: 449

DATE: 10/21/2015

MACHINE # 609

SHEET NUMBER: 1/1

	SEAM NUMBER	SEAM SECTION* START POINT	SEAM SECTION* FINISH POINT	APPROX. START TIME	AMB. AIR TEMP.	WELD TECH.	PREHEAT OR MACH. SPEED	MACHINE TEMPERATURES DIGITAL SET WEDGE OR BARREL	MACHINE TEMPERATURES DIGITAL SET NOZZLE	MACHINE TEMPERATURES INDICATOR WEDGE OR BARREL	MACHINE TEMPERATURES INDICATOR NOZZLE	APPROX. LENGTH WELDED	LENGTH FROM PREVIOUS DESTR.	DESTR. NUMBER	MON.	REMARKS	** NON-DESTRUCTIVE TEST DATE	** NON-DESTRUCTIVE MON.
1	P56 / P57	SEOS	NEOS	0803	50	JA	4	370	-	370	-	194	500/143	DSF29	SC	5P	10/21/2015	SC
2	P55 / P57	SEOS	NEOS	0841	50	JA	4	370	-	370	-	99	242		SC		10/21/2015	SC
3	P59 / P60	SEOS	NEOS	0926	55	JA	4	370	-	370	-	63	305		SC		10/21/2015	SC
4	P58 / P60	SEOS	NEOS	0940	60	JA	4	370	-	370	-	166	471		SC		10/21/2015	SC
5	P61 / P62	SEOS	NEOS	1016	60	JA	4	370	-	370	-	157	500/128	DSF32	SC	6B	10/21/2015	SC
6	P61 / P62	NEOS		-	-	-	-	-		-		128	128/0	DSF33	SC	6C	10/21/2015	SC
7	/	-						-		-								
8	/	-						-		-								
9	/	-						-		-								
10	/	-						-		-								
11	/	-						-		-								
12	/	-						-		-								
13	/	-						-		-								
14	/	-						-		-								
15	/	-						-		-								
16	/	-						-		-								
17	/	-						-		-								
							DAILY TOTAL						0					

* REFERENCE SEAM ENDPOINTS FROM AN END OF SEAM (EOS), A REPAIR NUMBER, OR A POINT LOCATION ON THE SEAM.

DESTRUCTIVE LENGTH CARRY-OVER

** COLUMNS TO BE USED BY THE DATA REVIEWER ONLY

GCS FORM: G13
(JUNE 1992)

REVIEWED BY: KMG DATE:

GOLDER ASSOCIATES

GEOMEMBRANE SEAM LOG

PROJECT NUMBER: 130 2962CQA
PROJECT TITLE: OU3 RA Construction
OWNER: Solutia AL
LOCATION: Anniston AL
CONTRACTOR: Taylor

		PASSING TRIAL SEAMS NO.	TIME	TECH ID
X	FUSION	TF02	1143	JA
	EXTRUSION			

DESTRUCTIVE LENGTH CARRY-OVER FROM PREVIOUS LOG: 0

DATE: 10/16/2015

MACHINE # 609

SHEET NUMBER: 1/1

	SEAM NUMBER	SEAM SECTION* START POINT	SEAM SECTION* FINISH POINT	APPROX. START TIME	AMB. AIR TEMP.	WELD TECH.	PREHEAT OR MACH. SPEED	MACHINE TEMPERATURES DIGITAL SET WEDGE OR BARREL NOZZLE	MACHINE TEMPERATURES INDICATOR WEDGE OR BARREL NOZZLE	APPROX. LENGTH WELDED	LENGTH FROM PREVIOUS DESTR.	DESTR. NUMBER	MON.	REMARKS	** NON-DESTRUCTIVE TEST DATE	** NON-DESTRUCTIVE MON.
1	P1 / P2	NEOS -	SEOS	1241	75	JA	5.0	370 -	370 -	310	50/260	DSF1	SC	1C	10/16/2015	SC
2	P1 / P7	NEOS -	SEOS	1400	75	JA	5.0	370 -	370 -	118	378		SC		10/16/2015	SC
3	P1 / P6	NEOS -	SEOS	1415	75	JA	5.0	370 -	370 -	300	500/178	DSF3	SC	1I	10/16/2015	SC
4	P10 / P11	WEOS -	EEOS	1513	75	JA	5.0	370 -	370 -	22	200		SC		10/16/2015	SC
5	P8 / P11	SEOS -	NEOS	1522	75	JA	5.0	370 -	370 -	117	317		SC		10/16/2015	SC
6	P9 / P11	SEOS -	NEOS	1530	75	JA	5.0	370 -	370 -	6	323		SC		10/16/2015	SC
7	P9 / P10	SEOS -	NEOS	1532	75	JA	5.0	370 -	370 -	343	500/166	DSF5	SC	1R	10/16/2015	SC
8	/	-						-	-							
9	/	-						-	-							
10	/	-						-	-							
11	/	-						-	-							
12	/	-						-	-							
13	/	-						-	-							
14	/	-						-	-							
15	/	-						-	-							
16	/	-						-	-							
17	/	-						-	-							
								DAILY TOTAL		1216						
								DESTRUCTIVE LENGTH CARRY-OVER			166					

* REFERENCE SEAM ENDPOINTS FROM AN END OF SEAM (EOS), A REPAIR NUMBER, OR A POINT LOCATION ON THE SEAM.

** COLUMNS TO BE USED BY THE DATA REVIEWER ONLY

GCS FORM: G13
(JUNE 1992)

REVIEWED BY: KMG DATE:

GOLDER ASSOCIATES

GEOMEMBRANE SEAM LOG

PROJECT NUMBER: 130 2962CQA
PROJECT TITLE: OU3 RA Construction
OWNER: Solutia AL
LOCATION: Anniston AL
CONTRACTOR: Taylor

[X] FUSION
[ ] EXTRUSION

PASSING TRIAL SEAMS

NO.	TIME	TECH ID
TF02	0816	JA
TF04	1303	JA

DATE 10/17/2015

MACHINE # 609

DESTRUCTIVE LENGTH CARRY-OVER FROM PREVIOUS LOG 166

SHEET NUMBER 1/1

	SEAM NUMBER		SEAM SECTION* START POINT	SEAM SECTION* FINISH POINT	APPROX. START TIME	AMB. AIR TEMP.	WELD TECH.	PREHEAT OR MACH. SPEED	MACHINE TEMPERATURES DIGITAL SET WEDGE OR BARREL	MACHINE TEMPERATURES INDICATOR WEDGE OR NOZZLE	APPROX. LENGTH WELDED	LENGTH FROM PREVIOUS DESTR.	DESTR. NUMBER	MON.	REMARKS	** NON-DESTRUCTIVE TEST DATE	** NON-DESTRUCTIVE MON.
1	P12	P13	NEOS	SEOS	0839	48	JA	4	370 -	370 -	87	253		SC		10/17/2015	SC
2	P12	P14	NEOS	SEOS	0854	48	JA	4	370 -	370 -	378	500/131	DSF7	SC	2E	10/17/2015	SC
3	P16	P17	NEOS	SEOS	1026	62	JA	4	370 -	370 -	304	435		SC		10/17/2015	SC
4	P15	P17	NEOS	SEOS	1121	62	JA	4	370 -	370 -	155	500/90	DSF9	SC	2M	10/17/2015	SC
5	P19	P20	SEOS	NEOS	1451	67	JA	4.8	370 -	370 -	308	398		SC		10/17/2015	SC
6	P19	P21	SEOS	NEOS	1441	67	JA	4.8	370 -	370 -	67	465		SC		10/17/2015	SC
7	P18	P21	SEOS	NEOS	1452	67	JA	4.8	370 -	370 -	66	500/31	DSF12	SC	3B	10/17/2015	SC
8	P23	P24	WEOS	EEOS	1510	67	JA	4.8	370 -	370 -	22	53		SC		10/17/2015	SC
9	P25	P26	WEOS	EEOS	1534	67	JA	4.8	370 -	370 -	22	75		SC		10/17/2015	SC
10	P24	P25	SEOS	NEOS	1608	67	JA	4.8	370 -	370 -	318	393		SC		10/18/2015	SC
11	P23	P25	SEOS	NEOS	1630	67	JA	4.8	370 -	370 -	47	440		SC		10/18/2015	SC
12	P23	P26	SEOS	NEOS	1640	67	JA	4.8	370 -	370 -	60	495/5	DSF13	SC	3F	10/18/2015	SC
13			-						-	-							
14			-						-	-							
15			-						-	-							
16			-						-	-							
17			-						-	-							
									DAILY TOTAL		1834						
									DESTRUCTIVE LENGTH CARRY-OVER			5					

* REFERENCE SEAM ENDPOINTS FROM AN END OF SEAM (EOS), A REPAIR NUMBER, OR A POINT LOCATION ON THE SEAM.

** COLUMNS TO BE USED BY THE DATA REVIEWER ONLY

GCS FORM: G13
(JUNE 1992)

REVIEWED BY: KMG DATE:

GOLDER ASSOCIATES

GEOMEMBRANE SEAM LOG

PROJECT NUMBER: 130 2962CQA
PROJECT TITLE: OU3 RA Construction
OWNER: Solutia AL
LOCATION: Anniston AL
CONTRACTOR: Taylor

[X] FUSION
[ ] EXTRUSION

PASSING TRIAL SEAMS NO.	TIME	TECH ID
TF02	850	JA

DESTRUCTIVE LENGTH CARRY-OVER FROM PREVIOUS LOG: 5

DATE: 10/18/2015

MACHINE # 609

SHEET NUMBER: 1/1

	SEAM NUMBER	SEAM SECTION* START POINT	SEAM SECTION* FINISH POINT	APPROX. START TIME	AMB. AIR TEMP.	WELD TECH.	PREHEAT OR MACH. SPEED	MACHINE TEMPERATURES DIGITAL SET WEDGE OR BARREL NOZZLE	MACHINE TEMPERATURES INDICATOR WEDGE OR BARREL NOZZLE	APPROX. LENGTH WELDED	LENGTH FROM PREVIOUS DESTR.	DESTR. NUMBER	MON.	REMARKS	** NON-DESTRUCTIVE TEST DATE	** NON-DESTRUCTIVE MON.
1	P25 / P27	SEOS	NEOS	0905	50	JA	6	370 -	370 -	365	370		SC		10/18/2015	SC
2	P26 / P27	SEOS	NEOS	0925	50	JA	6	370 -	370 -	61	427/4	DSF15	SC	3K	10/18/2015	SC
3	P30 / P31	NEOS	SEOS	0945	55	JA	6	370 -	370 -	405	409		SC		10/19/2015	SC
4	/	-						-	-							
5	/	-						-	-							
6	/	-						-	-							
7	/	-						-	-							
8	/	-						-	-							
9	/	-						-	-							
10	/	-						-	-							
11	/	-						-	-							
12	/	-						-	-							
13	/	-						-	-							
14	/	-						-	-							
15	/	-						-	-							
16	/	-						-	-							
17	/	-						-	-							
							DAILY TOTAL			831						
							DESTRUCTIVE LENGTH CARRY-OVER				409					

* REFERENCE SEAM ENDPOINTS FROM AN END OF SEAM (EOS), A REPAIR NUMBER, OR A POINT LOCATION ON THE SEAM.

** COLUMNS TO BE USED BY THE DATA REVIEWER ONLY

GCS FORM: G13
(JUNE 1992)

REVIEWED BY: KMG DATE:

GOLDER ASSOCIATES

GEOMEMBRANE SEAM LOG

PROJECT NUMBER: 130 2962CQA
PROJECT TITLE: OU3 RA Construction
OWNER: Solutia AL
LOCATION: Anniston AL
CONTRACTOR: Taylor

PASSING TRIAL SEAMS

		NO.	TIME	TECH ID
X	FUSION	TF02	0724	JA
	EXTRUSION	TF03	1230	JA

DESTRUCTIVE LENGTH CARRY-OVER FROM PREVIOUS LOG: 409

DATE: 10/19/2015

MACHINE # 609

SHEET NUMBER: 1/1

	SEAM NUMBER			SEAM SECTION* START POINT	SEAM SECTION* FINISH POINT	APPROX. START TIME	AMB. AIR TEMP.	WELD TECH.	PREHEAT OR MACH. SPEED	MACHINE TEMPERATURES DIGITAL SET WEDGE OR BARREL	MACHINE TEMPERATURES DIGITAL SET NOZZLE	MACHINE TEMPERATURES INDICATOR WEDGE OR BARREL	MACHINE TEMPERATURES INDICATOR NOZZLE	APPROX. LENGTH WELDED	LENGTH FROM PREVIOUS DESTR.	DESTR. NUMBER	MON.	REMARKS	** NON-DESTRUCTIVE TEST DATE	** NON-DESTRUCTIVE MON.
1	P31	/	P33	NEOS	SEOS	745	44	JA	4	370	-	370	-	121	500/30	DSF17	SC	3Q	10/19/2015	SC
2	P31	/	P32	NEOS	SEOS	816	44	JA	4	370	-	370	-	279	309		SC		10/19/2015	SC
3	P35	/	P36	WEOS	EEOS	937	49	JA	4	370	-	370	-	22	331		SC		10/19/2015	SC
4	P34	/	P35	NEOS	SEOS	1002	50	JA	4	370	-	370	-	147	478	DSF19	SC	4A	10/19/2015	SC
5	P34	/	P36	NEOS	SEOS	1032	50	JA	4	370	-	370	-	245	500/223		SC		10/19/2015	SC
6	P38	/	P39	WEOS	EEOS	1250	60	JA	4.6	370	-	370	-	22	245		SC		10/19/2015	SC
7	P40	/	P41	WEOS	EEOS	1314	60	JA	4.6	370	-	370	-	22	267		SC		10/19/2015	SC
8	P38	/	P41	NEOS	SEOS	1326	60	JA	4.6	370	-	370	-	24	291		SC		10/19/2015	SC
9	P38	/	P40	NEOS	SEOS	1331	60	JA	4.6	370	-	370	-	20	311		SC		10/19/2015	SC
10	P39	/	P40	NEOS	SEOS	1335	60	JA	4.6	370	-	370	-	332	500/143	DSF21	SC	4F	10/19/2015	SC
11	P43	/	P44	WEOS	EEOS	1459	60	JA	4.6	370	-	370	-	22	165		SC		10/20/2015	SC
12	P42	/	P44	NEOS	SEOS	1500	60	JA	4.6	370	-	370	-	83	248		SC		10/20/2015	SC
13	P42	/	P43	NEOS	SEOS	1510	60	JA	4.6	370	-	370	-	283	500/31	DSF23	SC		10/20/2015	SC
14		/		-						-		-								
15		/		-						-		-								
16		/		-						-		-								
17		/		-						-		-								
										DAILY TOTAL				1622						
										DESTRUCTIVE LENGTH CARRY-OVER					31					

* REFERENCE SEAM ENDPOINTS FROM AN END OF SEAM (EOS), A REPAIR NUMBER, OR A POINT LOCATION ON THE SEAM.

** COLUMNS TO BE USED BY THE DATA REVIEWER ONLY

GCS FORM: G13
(JUNE 1992)

REVIEWED BY: KMG DATE:

GOLDER ASSOCIATES

GEOMEMBRANE SEAM LOG

PROJECT NUMBER: 130 2962CQA
PROJECT TITLE: OU3 RA Construction
OWNER: Solutia AL
LOCATION: Anniston AL
CONTRACTOR: Taylor

		PASSING TRIAL SEAMS NO.	TIME	TECH ID
X	FUSION	TF02	0729	JA
	EXTRUSION	TF03	1238	JA

DATE 10/20/2015

MACHINE # 609

DESTRUCTIVE LENGTH CARRY-OVER FROM PREVIOUS LOG 31

SHEET NUMBER 1/1

	SEAM NUMBER			SEAM SECTION* START POINT	SEAM SECTION* FINISH POINT	APPROX. START TIME	AMB. AIR TEMP.	WELD TECH.	PREHEAT OR MACH. SPEED	MACHINE TEMPERATURES DIGITAL SET WEDGE OR BARREL NOZZLE	MACHINE TEMPERATURES INDICATOR WEDGE OR BARREL NOZZLE	APPROX. LENGTH WELDED	LENGTH FROM PREVIOUS DESTR.	DESTR. NUMBER	MON.	REMARKS	** NON-DESTRUCTIVE TEST DATE	** NON-DESTRUCTIVE MON.
1	P44	/	P45	NEOS	SEOS	804	50	JA	4	370	370	82	113		SC		10/20/2015	SC
2	P43	/	P45	NEOS	SEOS	812	50	JA	4	370	370	282	395		SC		10/20/2015	SC
3	P47	/	P48	SEOS	NEOS	1024	55	JA	4	370	370	142	500/37	DSF25	SC		10/20/2015	SC
4	P46	/	P48	SEOS	NEOS	1050	60	JA	4	370	370	221	258		SC	5B	10/20/2015	SC
5	P49	/	P51	SEOS	NEOS	1305	68	JA	4.8	370	370	151	409		SC		10/20/2015	SC
6	P50	/	P51	SEOS	NEOS	1330	68	JA	4.8	370	370	201	500/110	DSF28	SC	5G	10/20/2015	SC
7	P52	/	P54	SEOS	NEOS	1424	68	JA	4.8	370	370	122	232		SC		10/20/2015	SC
8	P53	/	P54	SEOS	NEOS	1447	68	JA	4.8	370	370	217	449		SC		10/20/2015	SC
9		/		-						-	-							
10		/		-						-	-							
11		/		-						-	-							
12		/		-						-	-							
13		/		-						-	-							
14		/		-						-	-							
15		/		-						-	-							
16		/		-						-	-							
17		/		-						-	-							
									DAILY TOTAL			1418						
									DESTRUCTIVE LENGTH CARRY-OVER				449					

* REFERENCE SEAM ENDPOINTS FROM AN END OF SEAM (EOS), A REPAIR NUMBER, OR A POINT LOCATION ON THE SEAM.

** COLUMNS TO BE USED BY THE DATA REVIEWER ONLY

GCS FORM: G13
(JUNE 1992)

REVIEWED BY: KMG DATE:

GOLDER ASSOCIATES

GEOMEMBRANE SEAM LOG

PROJECT NUMBER: 130 2962CQA
PROJECT TITLE: OU3 RA Construction
OWNER: Solutia AL
LOCATION: Anniston AL
CONTRACTOR: Taylor

PASSING TRIAL SEAMS

		NO.	TIME	TECH ID
X	FUSION	TF01	1140	RC
	EXTRUSION			

DESTRUCTIVE LENGTH CARRY-OVER FROM PREVIOUS LOG: 0

DATE: 10/16/2015

MACHINE # 610

SHEET NUMBER: 1/1

	SEAM NUMBER		SEAM SECTION* START POINT	SEAM SECTION* FINISH POINT	APPROX. START TIME	AMB. AIR TEMP.	WELD TECH.	PREHEAT OR MACH. SPEED	MACHINE TEMPERATURES DIGITAL SET WEDGE OR BARREL	MACHINE TEMPERATURES INDICATOR WEDGE OR BARREL	APPROX. LENGTH WELDED	LENGTH FROM PREVIOUS DESTR.	DESTR. NUMBER	MON.	REMARKS	** NON-DESTRUCTIVE TEST DATE	** NON-DESTRUCTIVE MON.
1	P4	/ P5	WEOS -	SEOS	1246	75	RC	7.5	370 -	370 -	15	15		SC		10/16/2015	SC
2	P3	/ P5	WEOS -	SEOS	1255	75	RC	7.5	370 -	370 -	8	23		SC		10/16/2015	SC
3	P2	/ P3	NEOS -	SEOS	1306	75	RC	7.5	370 -	370 -	42	65		SC		10/16/2015	SC
4	P2	/ P5	NEOS -	SEOS	1315	75	RC	7.5	370 -	370 -	75	68/72	DSF2	SC	IE	10/16/2015	SC
5	P2	/ P4	NEOS -	SEOS	1325	75	RC	7.5	350 -	370 -	51	123		SC		10/16/2015	SC
6	P6	/ P7	WEOS -	EEOS	1350	75	RC	7.5	370 -	370 -	22	145		SC		10/16/2015	SC
7	P8	/ P9	WEOS -	EEOS	1419	75	RC	7.5	370 -	370 -	22	167		SC		10/16/2015	SC
8	P7	/ P8	NEOS -	SEOS	1430	75	RC	7.5	370 -	370 -	109	276		SC		10/16/2015	SC
9	P7	/ P9	NEOS -	SEOS	1441	75	RC	7.5	370 -	370 -	41	317		SC		10/16/2015	SC
10	P6	/ P9	NEOS -	SEOS	1446	75	RC	7.5	370 -	370 -	306	500/123	DSF4	SC	1J	10/16/2015	SC
11	P11	/ P12	NEOS -	SEOS	1545	75	RC	7.5	370 -	370 -	125	248		SC		10/17/2015	SC
12	P10	/ P12	NEOS -	SEOS	1603	75	RC	7.5	370 -	370 -	342	500/90	DSF6	SC	1X	10/17/2015	SC
13		/	-						-	-							
14		/	-						-	-							
15		/	-						-	-							
16		/	-						-	-							
17		/	-						-	-							
	P								DAILY TOTAL		1158				** COLUMNS TO BE USED		
	A REPAIR NUMBER, OR A POINT LOCATION ON THE SEAM.								DESTRUCTIVE LENGTH CARRY-OVER			90			BY THE DATA REVIEWER ONLY		

P
(JUNE 1992)

REVIEWED BY: KMG DATE: 10/20/2015

GOLDER ASSOCIATES

GEOMEMBRANE SEAM LOG

PROJECT NUMBER: 130 2962CQA
PROJECT TITLE: OU3 RA Construction
OWNER: Solutia AL
LOCATION: Anniston AL
CONTRACTOR: Taylor

[X] FUSION
[ ] EXTRUSION

PASSING TRIAL SEAMS

NO.	TIME	TECH ID
TF01	0748	RC
TF03	1304	RC

DATE 10/17/2015

MACHINE # 610

DESTRUCTIVE LENGTH CARRY-OVER FROM PREVIOUS LOG 90

SHEET NUMBER 1/1

	SEAM NUMBER		SEAM SECTION* START POINT	SEAM SECTION* FINISH POINT	APPROX. START TIME	AMB. AIR TEMP.	WELD TECH.	PREHEAT OR MACH. SPEED	MACHINE TEMPERATURES DIGITAL SET WEDGE OR BARREL	MACHINE TEMPERATURES INDICATOR WEDGE OR NOZZLE	APPROX. LENGTH WELDED	LENGTH FROM PREVIOUS DESTR.	DESTR. NUMBER	MON.	REMARKS	** NON-DESTRUCTIVE TEST DATE	** NON-DESTRUCTIVE MON.
1	P13	P14	EEOS	WEOS	0821	45	RC	6	370	370	22	112		SC		10/17/2015	SC
2	P15	P16	WEOS	EEOS	0831	45	RC	6	370	370	22	134		SC		10/17/2015	SC
3	P13	P16	NEOS	SEOS	0852	48	RC	6	370	370	84	218		SC		10/17/2015	SC
4	P14	P16	NEOS	SEOS	0906	48	RC	6	370	370	212	430		SC		10/17/2015	SC
5	P14	P15	NEOS	SEOS	0948	50	RC	6	350	370	159	500/89	DSF8	SC	2F	10/17/2015	SC
6	P18	P19	WEOS	EEOS	1040	62	RC	6	370	370	22	111		SC		10/17/2015	SC
7	P17	P18	NEOS	SEOS	1056	62	RC	6	370	370	65	176		SC		10/17/2015	SC
8	P17	P19	NEOS	SEOS	1106	62	RC	6	370	370	384	500/60	DSF10	SC	2N	10/17/2015	SC
9	P20	P21	WEOS	EEOS	1346	62	RC	6	370	370	22	82		SC		10/17/2015	SC
10	P20	P22	SEOS	NEOS	1408	62	RC	6.7	370	370	301	383		SC		10/17/2015	SC
11	P21	P22	SEOS	NEOS	1450	62	RC	6.7	370	370	134	500/17	DSF11	SC	2W	10/17/2015	SC
12	P22	P24	SEOS	NEOS	1523	62	RC	6.7	370	370	321	338		SC		10/17/2015	SC
13	P22	P23	SEOS	NEOS	1611	62	RC	6.7	370	370	107	445		SC		10/17/2015	SC
14			-						-	-							
15			-						-	-							
16			-						-	-							
17			-						-	-							
	P							DAILY TOTAL			1855				** COLUMNS TO BE USED		
	A REPAIR NUMBER, OR A POINT LOCATION ON THE SEAM.							DESTRUCTIVE LENGTH CARRY-OVER				445			BY THE DATA REVIEWER ONLY		

P
(JUNE 1992)

REVIEWED BY: KMG DATE:

GOLDER ASSOCIATES

GEOMEMBRANE SEAM LOG

PROJECT NUMBER: 130 2962CQA
PROJECT TITLE: OU3 RA Construction
OWNER: Solutia AL
LOCATION: Anniston AL
CONTRACTOR: Taylor

[X] FUSION
[ ] EXTRUSION

PASSING TRIAL SEAMS NO.	TIME	TECH ID
TF01	844	RC

DATE 10/18/2015

MACHINE # 610

DESTRUCTIVE LENGTH CARRY-OVER FROM PREVIOUS LOG 445

SHEET NUMBER 1/1

	SEAM NUMBER	SEAM SECTION* START POINT	SEAM SECTION* FINISH POINT	APPROX. START TIME	AMB. AIR TEMP.	WELD TECH.	PREHEAT OR MACH. SPEED	MACHINE TEMPERATURES DIGITAL SET WEDGE OR BARREL	MACHINE TEMPERATURES INDICATOR WEDGE OR BARREL	APPROX. LENGTH WELDED	LENGTH FROM PREVIOUS DESTR.	DESTR. NUMBER	MON.	REMARKS	** NON-DESTRUCTIVE TEST DATE	** NON-DESTRUCTIVE MON.
1	P28 / P29	WEOS	EEOS	0903	50	RC	6	370 -	370 -	22	467		SC		10/18/2015	SC
2	P27 / P29	SEOS	NEOS	0916	50	RC	6	370 -	370 -	232	500/199	DSF14	SC	3I	10/18/2015	SC
3	P27 / P28	SEOS	NEOS	0951	50	RC	6	370 -	370 -	192	391		SC		10/18/2015	SC
4	P28 / P30	NEOS	SEOS	1027	55	RC	6	370 -	370 -	190	500/81	DSF16	SC	3P	10/19/2015	SC
5	P29 / P30	NEOS	SEOS	1045	55	RC	6	370 -	370 -	228	309		SC		10/19/2015	SC
6	/	-						-	-							
7	/	-						-	-							
8	/	-						-	-							
9	/	-						-	-							
10	/	-						-	-							
11	/	-						-	-							
12	/	-						-	-							
13	/	-						-	-							
14	/	-						-	-							
15	/	-						-	-							
16	/	-						-	-							
17	/	-						-	-							
								DAILY TOTAL		864						
								DESTRUCTIVE LENGTH CARRY-OVER			309					

* REFERENCE SEAM ENDPOINTS FROM AN END OF SEAM (EOS), A REPAIR NUMBER, OR A POINT LOCATION ON THE SEAM.

** COLUMNS TO BE USED BY THE DATA REVIEWER ONLY

GCS FORM: G13
(JUNE 1992)

REVIEWED BY: KMG DATE:

GOLDER ASSOCIATES

GEOMEMBRANE SEAM LOG

PROJECT NUMBER: 130 2962CQA
PROJECT TITLE: OU3 RA Construction
OWNER: Solutia AL
LOCATION: Anniston AL
CONTRACTOR: Taylor

		PASSING TRIAL SEAMS NO.	TIME	TECH ID
X	FUSION	TF01	730	RC
	EXTRUSION	TF04	1232	RC

DATE 10/19/2015

MACHINE # 610

DESTRUCTIVE LENGTH CARRY-OVER FROM PREVIOUS LOG 309

SHEET NUMBER 1/1

	SEAM NUMBER			SEAM SECTION* START POINT		FINISH POINT	APPROX. START TIME	AMB. AIR TEMP.	WELD TECH.	PREHEAT OR MACH. SPEED	MACHINE TEMPERATURES DIGITAL SET WEDGE OR BARREL	MACHINE TEMPERATURES INDICATOR WEDGE OR NOZZLE	APPROX. LENGTH WELDED	LENGTH FROM PREVIOUS DESTR.	DESTR. NUMBER	MON.	REMARKS	** NON-DESTRUCTIVE TEST DATE	** NON-DESTRUCTIVE MON.
1	P32	/	P33	NEOS	-	SEOS	739	44	RC	6	370 -	370 -	22	331		SC		10/19/2015	SC
2	P33	/	P34	NEOS	-	SEOS	804	44	RC	6	370 -	370 -	123	454		SC		10/19/2015	SC
3	P32	/	P34	NEOS	-	SEOS	827	44	RC	6	370 -	370 -	276	500/230	DSF18	SC	3S	10/19/2015	SC
4	P35	/	P37	NEOS	-	SEOS	1013	50	RC	6	370 -	370 -	146	376		SC		10/19/2015	SC
5	P36	/	P37	NEOS	-	SEOS	1036	50	RC	6	350 -	370 -	236	500/112	DSF20	SC	4B	10/19/2015	SC
6	P37	/	P38	NEOS	-	SEOS	1322	60	RC	6	370 -	370 -	46	158		SC		10/19/2015	SC
7	P37	/	P39	NEOS	-	SEOS	1328	60	RC	6	370 -	370 -	337	495		SC		10/19/2015	SC
8	P41	/	P42	NEOS	-	SEOS	1435	60	RC	6	370 -	370 -	24	500/19	DSF22	SC		10/19/2015	SC
9	P40	/	P42	NEOS	-	SEOS	1440	60	RC	6	370 -	370 -	347	366				10/19/2015	SC
10		/			-						-	-							
11		/			-						-	-							
12		/			-						-	-							
13		/			-						-	-							
14		/			-						-	-							
15		/			-						-	-							
16		/			-						-	-							
17		/			-						-	-							
	DAILY TOTAL												1557						
	DESTRUCTIVE LENGTH CARRY-OVER													366					

P
A REPAIR NUMBER, OR A POINT LOCATION ON THE SEAM.

** COLUMNS TO BE USED BY THE DATA REVIEWER ONLY

P
(JUNE 1992)

REVIEWED BY: KMG DATE: 10/20/2015

GOLDER ASSOCIATES

GEOMEMBRANE SEAM LOG

PROJECT NUMBER: 130 2962CQA
PROJECT TITLE: OU3 RA Construction
OWNER: Solutia AL
LOCATION: Anniston AL
CONTRACTOR: Taylor

[X] FUSION
[ ] EXTRUSION

PASSING TRIAL SEAMS NO.	TIME	TECH ID
TF01	727	RC
TF04	1240	RC

DATE 10/20/2015

MACHINE # 610

DESTRUCTIVE LENGTH CARRY-OVER FROM PREVIOUS LOG 366

SHEET NUMBER 1/1

	SEAM NUMBER			SEAM SECTION* START POINT		FINISH POINT	APPROX. START TIME	AMB. AIR TEMP.	WELD TECH.	PREHEAT OR MACH. SPEED	MACHINE TEMPERATURES DIGITAL SET WEDGE OR BARREL	MACHINE TEMPERATURES INDICATOR WEDGE OR NOZZLE	APPROX. LENGTH WELDED	LENGTH FROM PREVIOUS DESTR.	DESTR. NUMBER	MON.	REMARKS	** NON-DESTRUCTIVE TEST DATE	** NON-DESTRUCTIVE MON.
1	P46	/	P47	WEOS	-	EEOS	758	50	RC	6	370 -	370 -	22	388		SC		10/20/2015	SC
2	P45	/	P46	NEOS	-	SEOS	813	50	RC	6	370 -	370 -	222	500/110	DSF24	SC	4S	10/20/2015	SC
3	P45	/	P47	NEOS	-	SEOS	855	50	RC	6	370 -	370 -	143	253		SC		10/20/2015	SC
4	P49	/	P50	WEOS	-	EEOS	1024	55	RC	6	370 -	370 -	22	275		SC		10/20/2015	SC
5	P48	/	P49	SEOS	-	NEOS	1037	55	RC	6	350 -	370 -	157	432		SC		10/20/2015	SC
6	P48	/	P50	SEOS	-	NEOS	1100	60	RC	6	370 -	370 -	204	500/136	DSF26	SC	5C	10/20/2015	SC
7	P52	/	P53	WEOS	-	EEOS	1303	68	RC	6.5	370 -	370 -	22	158		SC		10/20/2015	SC
8	P51	/	P52	SEOS	-	NEOS	1315	68	RC	6.5	370 -	370 -	129	287		SC		10/20/2015	SC
9	P51	/	P53	SEOS	-	NEOS	1335	68	RC	6.5	370 -	370 -	218	500/5	DSF27	SC	5F	10/20/2015	SC
10	P55	/	P56	WEOS	-	EEOS	1445	68	RC	6.5	370 -	370 -	22	27		SC		10/20/2015	SC
11	P54	/	P56	SEOS	-	NEOS	1455	68	RC	6.5	370 -	370 -	200	227		SC		10/21/2015	SC
12	P54	/	P55	SEOS	-	NEOS	1510	68	RC	6.5	370 -	370 -	126	353		SC		10/21/2015	SC
13		/			-						-	-							
14		/			-						-	-							
15		/			-						-	-							
16		/			-						-	-							
17		/			-						-	-							
	P									DAILY TOTAL			1487				** COLUMNS TO BE USED		
	A REPAIR NUMBER, OR A POINT LOCATION ON THE SEAM.									DESTRUCTIVE LENGTH CARRY-OVER				353			BY THE DATA REVIEWER ONLY		

P
(JUNE 1992)

REVIEWED BY: KMG DATE: 10/20/2015

GOLDER ASSOCIATES

GEOMEMBRANE SEAM LOG

PROJECT NUMBER: 130 2962CQA
PROJECT TITLE: OU3 RA Construction
OWNER: Solutia AL
LOCATION: Anniston AL
CONTRACTOR: Taylor

		PASSING TRIAL SEAMS NO.	TIME	TECH ID
X	FUSION	TF02	0725	RC
	EXTRUSION			

DATE 10/21/2015

MACHINE # 610

DESTRUCTIVE LENGTH CARRY-OVER FROM PREVIOUS LOG 353

SHEET NUMBER 1/1

	SEAM NUMBER	SEAM SECTION* START POINT	SEAM SECTION* FINISH POINT	APPROX. START TIME	AMB. AIR TEMP.	WELD TECH.	PREHEAT OR MACH. SPEED	MACHINE TEMPERATURES DIGITAL SET WEDGE OR BARREL	MACHINE TEMPERATURES DIGITAL SET NOZZLE	MACHINE TEMPERATURES INDICATOR WEDGE OR BARREL	MACHINE TEMPERATURES INDICATOR NOZZLE	APPROX. LENGTH WELDED	LENGTH FROM PREVIOUS DESTR.	DESTR. NUMBER	MON.	REMARKS	** NON-DESTRUCTIVE TEST DATE	** NON-DESTRUCTIVE MON.
1	P58 / P59	WEOS	EEOS	0821	50	RC	6	370	-	370	-	22	375		SC		10/21/2015	SC
2	P57 / P59	SEOS	NEOS	0835	50	RC	6	370	-	370	-	69	444		SC		10/21/2015	SC
3	P57 / P58	SEOS	NEOS	0846	51	RC	6	370	-	370	-	192	500/136	DSF30	SC	5Q	10/21/2015	SC
4	P60 / P61	SEOS	NEOS	0940	60	RC	6	370	-	370	-	200	336		SC		10/21/2015	SC
5	P63 / P64	WEOS	EEOS	1024	68	RC	6	370	-	370	-	2	338		SC	CAP	-	-
6	P62 / P63	SEOS	NEOS	1027	68	RC	6	370	-	370	-	49	387		SC		10/21/2015	SC
7	P62 / P64	SEOS	NEOS	1036	68	RC	6	370	-	370	-	29	416/0	DSF31	SC	6A	10/21/2015	SC
8	/	-						-		-								
9	/	-						-		-								
10	/	-						-		-								
11	/	-						-		-								
12	/	-						-		-								
13	/	-						-		-								
14	/	-						-		-								
15	/	-						-		-								
16	/	-						-		-								
17	/	-						-		-								
							DAILY TOTAL					1487						
							DESTRUCTIVE LENGTH CARRY-OVER						0					

* REFERENCE SEAM ENDPOINTS FROM AN END OF SEAM (EOS), A REPAIR NUMBER, OR A POINT LOCATION ON THE SEAM.

** COLUMNS TO BE USED BY THE DATA REVIEWER ONLY

GCS FORM: G13
(JUNE 1992)

REVIEWED BY: KMG DATE:

GOLDER ASSOCIATES

APPENDIX H3.3

Geomembrane Trial Seam Logs

GEOMEMBRANE TRIAL SEAM LOG

PROJECT NUMBER: 130-2962CQA
PROJECT TITLE: OU3 RA Construction
OWNER: SOLUTIA
LOCATION: ANNISTON
CONTRACTOR: TAYLOR

[X] TF - # = FUSION
[ ] TX - # = EXTRUSION

DATE 10/16/2015
SHEET NUMBER 1/1

SAMPLE NUMBER	APPROX. TIME	WELDING MACHINE NUMBER	WELD TECH.	TEMPERATURES: AMBIENT AIR TEMP.	TEMPERATURES: PREHEAT OR MACHINE SPEED	TEMPERATURES: EXTRUDER	TEMPERATURES: NOZZLE OR WEDGE	TEST RESULTS: INSIDE PEEL MODE STRENGTH	TEST RESULTS: OUTSIDE PEEL MODE STRENGTH	TEST RESULTS: SHEAR MODE STRENGTH	PASS OR FAIL	MON.	REMARKS
TF01	1140	610	RC	75	7.5		370	SE1/SE1/SE1 93/94/80	SE1/SE1/SE1 103/93/101	BRK/BRK/BRK 129/122/124	PASS	SC	
TF02	1143	609	JA	75	5		370	SE1/SE1/SE1 93/104/93	SE1/SE1/SE1 99/77/88	BRK/BRK/BRK 136/130/130	PASS	SC	
								/ /	/ /	/			
								/ /	/ /	/			
								/ /	/ /	/			
								/ /	/ /	/			
								/ /	/ /	/			
								/ /	/ /	/			
								/ /	/ /	/			
								/ /	/ /	/			
								/ /	/ /	/			
								/ /	/ /	/			
								/ /	/ /	/			
								/ /	/ /	/			
								/ /	/ /	/			
								/ /	/ /	/			
								/ /	/ /	/			
								/ /	/ /	/			
								/ /	/ /	/			
								/ /	/ /	/			
								/ /	/ /	/			
								/ /	/ /	/			
								/ /	/ /	/			

GCS FORM: G12
(JUNE 1992)

REVIEWED BY: KMG DATE: 11/4/2015

GOLDER ASSOCIATES

GEOMEMBRANE TRIAL SEAM LOG

PROJECT NUMBER: 130-2962CQA
PROJECT TITLE: OU3 RA Construction
OWNER: SOLUTIA
LOCATION: ANNISTON
CONTRACTOR: TAYLOR

X TF - # = FUSION
TX - # = EXTRUSION

DATE 10/17/2015
SHEET NUMBER 1/1

SAMPLE NUMBER	APPROX. TIME	WELDING MACHINE NUMBER	WELD TECH.	TEMPERATURES: AMBIENT AIR TEMP.	TEMPERATURES: PREHEAT OR MACHINE SPEED	TEMPERATURES: EXTRUDER	TEMPERATURES: NOZZLE OR WEDGE	TEST RESULTS: INSIDE PEEL MODE STRENGTH	TEST RESULTS: OUTSIDE PEEL MODE STRENGTH	TEST RESULTS: SHEAR MODE STRENGTH	PASS OR FAIL	MON.	REMARKS
								SE1/SE1/SE1	SE1/SE1/SE1	BRK/BRK/BRK			
TF01	748	610	RC	45	6		370	105/118/120	109/114/110	160/161/160	PASS	SC	
								SE1/SE1/SE1	SE1/SE1/SE1	BRK/BRK/BRK			
TF02	816	609	JA	45	4		370	83/102/112	99/107/63	148/150/147	PASS	SC	
								SE1/SE1/SE1	SE1/SE1/SE1	BRK/BRK/BRK			
TF03	1304	610	RC	67	6.7		370	85/84/95	91/93/83	118/114/108	PASS	SC	
								SE1/SE1/SE1	SE1/SE1/SE1	BRK/BRK/BRK			
TF04	1303	609	JA	67	4.8		370	93/84/99	101/89/83	120/124/116	PASS	SC	
								/ /	/ /	/			
								/ /	/ /	/			
								/ /	/ /	/			
								/ /	/ /	/			
								/ /	/ /	/			
								/ /	/ /	/			
								/ /	/ /	/			
								/ /	/ /	/			
								/ /	/ /	/			
								/ /	/ /	/			
								/ /	/ /	/			
								/ /	/ /	/			
								/ /	/ /	/			
								/ /	/ /	/			
								/ /	/ /	/			
								/ /	/ /	/			
								/ /	/ /	/			
								/ /	/ /	/			
								/ /	/ /	/			

GCS FORM: G12
(JUNE 1992)

REVIEWED BY: KMG DATE: 11/4/2015

GOLDER ASSOCIATES

GEOMEMBRANE TRIAL SEAM LOG

PROJECT NUMBER: 130-2962CQA
PROJECT TITLE: OU3 RA Construction
OWNER: SOLUTIA
LOCATION: ANNISTON
CONTRACTOR: TAYLOR

X TF - # = FUSION
TX - # = EXTRUSION

DATE 10/18/2015
SHEET NUMBER 1/1

SAMPLE NUMBER	APPROX. TIME	WELDING MACHINE NUMBER	WELD TECH.	TEMPERATURES: AMBIENT AIR TEMP.	TEMPERATURES: PREHEAT OR MACHINE SPEED	TEMPERATURES: EXTRUDER	TEMPERATURES: NOZZLE OR WEDGE	TEST RESULTS: INSIDE PEEL MODE STRENGTH	TEST RESULTS: OUTSIDE PEEL MODE STRENGTH	TEST RESULTS: SHEAR MODE STRENGTH	PASS OR FAIL	MON.	REMARKS
								SE1/SE1/SE1	SE1/SE1/SE1	BRK/BRK/BRK			
TF01	0844	610	RC	47	6		370	95/93/92	106/103/107	132/138/131	PASS	SC	
								SE1/SE1/SE1	SE1/SE1/SE1	BRK/BRK/BRK			
TF02	0850	609	JA	47	4		370	101/101/100	105/97/106	135/133/131	PASS	SC	
								/ /	/ /	/			
								/ /	/ /	/			
								/ /	/ /	/			
								/ /	/ /	/			
								/ /	/ /	/			
								/ /	/ /	/			
								/ /	/ /	/			
								/ /	/ /	/			
								/ /	/ /	/			
								/ /	/ /	/			
								/ /	/ /	/			
								/ /	/ /	/			
								/ /	/ /	/			
								/ /	/ /	/			
								/ /	/ /	/			
								/ /	/ /	/			
								/ /	/ /	/			
								/ /	/ /	/			
								/ /	/ /	/			
								/ /	/ /	/			
								/ /	/ /	/			
								/ /	/ /	/			

GCS FORM: G12
(JUNE 1992)

REVIEWED BY: KMG DATE: 11/4/2015

GOLDER ASSOCIATES

GEOMEMBRANE TRIAL SEAM LOG

PROJECT NUMBER: 130-2962CQA
PROJECT TITLE: OU3 RA Construction
OWNER: SOLUTIA
LOCATION: ANNISTON
CONTRACTOR: TAYLOR

X TF - # = FUSION
TX - # = EXTRUSION

DATE 10/19/2015
SHEET NUMBER 1/1

SAMPLE NUMBER	APPROX. TIME	WELDING MACHINE NUMBER	WELD TECH.	TEMPERATURES: AMBIENT AIR TEMP.	TEMPERATURES: PREHEAT OR MACHINE SPEED	TEMPERATURES: EXTRUDER	TEMPERATURES: NOZZLE OR WEDGE	TEST RESULTS: INSIDE PEEL MODE STRENGTH	TEST RESULTS: OUTSIDE PEEL MODE STRENGTH	TEST RESULTS: SHEAR MODE STRENGTH	PASS OR FAIL	MON.	REMARKS
								SE1/SE1/SE1	SE1/SE1/SE1	BRK/BRK/BRK			
TF01	0730	610	RC	40	6		370	118/117/106	125/112/114	175/171/171	PASS	SC	
								SE1/SE1/SE1	SE1/SE1/SE1	BRK/BRK/BRK			
TF02	0724	609	JA	40	4		370	116/109/112	105/111/110	166/160/162	PASS	SC	
								SE1/SE1/SE1	SE1/SE1/SE1	BRK/BRK/BRK			
TF03	1230	609	JA	60	4.6		370	93/87/85	89/98/95	127/125/122	PASS	SC	
								SE1/SE1/SE1	SE1/SE1/SE1	BRK/BRK/BRK			
TF04	1232	610	RC	60	6.4		370	94/103/93	104/100/107	131/137/138	PASS	SC	
								/ /	/ /	/			
								/ /	/ /	/			
								/ /	/ /	/			
								/ /	/ /	/			
								/ /	/ /	/			
								/ /	/ /	/			
								/ /	/ /	/			
								/ /	/ /	/			
								/ /	/ /	/			
								/ /	/ /	/			
								/ /	/ /	/			
								/ /	/ /	/			
								/ /	/ /	/			
								/ /	/ /	/			
								/ /	/ /	/			
								/ /	/ /	/			
								/ /	/ /	/			
								/ /	/ /	/			

GCS FORM: G12
(JUNE 1992)

REVIEWED BY: KMG DATE: 11/4/2015

GOLDER ASSOCIATES

GEOMEMBRANE TRIAL SEAM LOG

PROJECT NUMBER: 130-2962CQA
PROJECT TITLE: OU3 RA Construction
OWNER: SOLUTIA
LOCATION: ANNISTON
CONTRACTOR: TAYLOR

X TF - # = FUSION
TX - # = EXTRUSION

DATE 10/20/2015
SHEET NUMBER 1/1

SAMPLE NUMBER	APPROX. TIME	WELDING MACHINE NUMBER	WELD TECH.	TEMPERATURES: AMBIENT AIR TEMP.	TEMPERATURES: PREHEAT OR MACHINE SPEED	TEMPERATURES: EXTRUDER	TEMPERATURES: NOZZLE OR WEDGE	TEST RESULTS: INSIDE PEEL MODE STRENGTH	TEST RESULTS: OUTSIDE PEEL MODE STRENGTH	TEST RESULTS: SHEAR MODE STRENGTH	PASS OR FAIL	MON.	REMARKS
TF01	0721	610	RC	50	4		370	SE1/SE1/SE1 102/109/102	SE1/SE1/SE1 115/118/115	BRK/BRK/BRK 154/157/154	PASS	SC	
TF02	0729	609	JA	50	6		370	SE1/SE1/SE1 114/116/113	SE1/SE1/SE1 100/100/106	BRK/BRK/BRK 153/157/152	PASS	SC	
TF03	1238	609	JA	68	4.8		370	SE1/SE1/SE1 109/100/103	SE1/SE1/SE1 102/103/111	BRK/BRK/BRK 147/148/144	PASS	SC	
TF04	1240	610	RC	68	6.5		370	SE1/SE1/SE1 100/101/94	SE1/SE1/SE1 89/101/90	BRK/BRK/BRK 138/132/130	PASS	SC	
								/ /	/ /	/			
								/ /	/ /	/			
								/ /	/ /	/			
								/ /	/ /	/			
								/ /	/ /	/			
								/ /	/ /	/			
								/ /	/ /	/			
								/ /	/ /	/			
								/ /	/ /	/			
								/ /	/ /	/			
								/ /	/ /	/			
								/ /	/ /	/			
								/ /	/ /	/			
								/ /	/ /	/			
								/ /	/ /	/			
								/ /	/ /	/			
								/ /	/ /	/			
								/ /	/ /	/			

GCS FORM: G12
(JUNE 1992)

REVIEWED BY: KMG DATE: 11/4/2015

GOLDER ASSOCIATES

GEOMEMBRANE TRIAL SEAM LOG

PROJECT NUMBER: 130-2962CQA
PROJECT TITLE: OU3 RA Construction
OWNER: SOLUTIA
LOCATION: ANNISTON
CONTRACTOR: TAYLOR

X TF - # = FUSION
TX - # = EXTRUSION

DATE 10/21/2015
SHEET NUMBER 1/1

SAMPLE NUMBER	APPROX. TIME	WELDING MACHINE NUMBER	WELD TECH.	TEMPERATURES: AMBIENT AIR TEMP.	TEMPERATURES: PREHEAT OR MACHINE SPEED	TEMPERATURES: EXTRUDER	TEMPERATURES: NOZZLE OR WEDGE	TEST RESULTS: INSIDE PEEL MODE STRENGTH	TEST RESULTS: OUTSIDE PEEL MODE STRENGTH	TEST RESULTS: SHEAR MODE STRENGTH	PASS OR FAIL	MON.	REMARKS
TF01	0724	609	JA	50	4		370	SE1/SE1/SE1 102/109/102	SE1/SE1/SE1 115/118/115	BRK/BRK/BRK 154/157/154	PASS	SC	
TF02	0725	610	RC	50	6		370	SE1/SE1/SE1 114/116/113	SE1/SE1/SE1 100/100/106	BRK/BRK/BRK 153/157/152	PASS	SC	
								/ /	/ /	/			
								/ /	/ /	/			
								/ /	/ /	/			
								/ /	/ /	/			
								/ /	/ /	/			
								/ /	/ /	/			
								/ /	/ /	/			
								/ /	/ /	/			
								/ /	/ /	/			
								/ /	/ /	/			
								/ /	/ /	/			
								/ /	/ /	/			
								/ /	/ /	/			
								/ /	/ /	/			
								/ /	/ /	/			
								/ /	/ /	/			
								/ /	/ /	/			
								/ /	/ /	/			
								/ /	/ /	/			
								/ /	/ /	/			
								/ /	/ /	/			

GCS FORM: G12
(JUNE 1992)

REVIEWED BY: KMG DATE: 11/4/2015

GOLDER ASSOCIATES

GEOMEMBRANE TRIAL SEAM LOG

PROJECT NUMBER: 130-2962CQA
PROJECT TITLE: OU3 RA Construction
OWNER: SOLUTIA
LOCATION: ANNISTON
CONTRACTOR: TAYLOR

[ ] TF - # = FUSION
[X] TX - # = EXTRUSION

DATE 10/22/2015
SHEET NUMBER 1/1

SAMPLE NUMBER	APPROX. TIME	WELDING MACHINE NUMBER	WELD TECH.	TEMPERATURES: AMBIENT AIR TEMP.	TEMPERATURES: PREHEAT OR MACHINE SPEED	TEMPERATURES: EXTRUDER	TEMPERATURES: NOZZLE OR WEDGE	TEST RESULTS: INSIDE PEEL MODE STRENGTH	TEST RESULTS: OUTSIDE PEEL MODE STRENGTH	TEST RESULTS: SHEAR MODE STRENGTH	PASS OR FAIL	MON.	REMARKS
								SE3/SE3/SE3	/ /	SE1/SE1/SE1			
TX01	0745	39	IB	51	250	250		110/111/134	/ /	141/137/142	PASS	SC	#19
								SE3/SE3/SE3	/ /	SE1/SE1/SE1			
TX02	0752	39	RC	51	250	250		102/125/125	/ /	139/140/134	PASS	SC	#20
								SE3/SE3/SE3	/ /	SE1/SE1/SE1			
TX03	1300	39	RC	74	250	250		104/108/114	/ /	122/129/131	PASS	SC	#21
								SE3/SE3/SE3	/ /	SE1/SE1/SE1			
TX04	1305	39	IB	74	250	250		110/114/120	/ /	122/117/127	PASS	SC	#22
								/ /	/ /	/			
								/ /	/ /	/			
								/ /	/ /	/			
								/ /	/ /	/			
								/ /	/ /	/			
								/ /	/ /	/			
								/ /	/ /	/			
								/ /	/ /	/			
								/ /	/ /	/			
								/ /	/ /	/			
								/ /	/ /	/			
								/ /	/ /	/			
								/ /	/ /	/			
								/ /	/ /	/			
								/ /	/ /	/			
								/ /	/ /	/			
								/ /	/ /	/			

GCS FORM: G12
(JUNE 1992)

REVIEWED BY: KMG DATE: 11/4/2015

GOLDER ASSOCIATES

APPENDIX H3.4

Geomembrane Vacuum Test Logs

GEOMEMBRANE VACUUM TEST LOG

PROJECT NUMBER: 130 2962CQA
PROJECT TITLE: OU3 RA Construction
OWNER: Solutia
LOCATION: Anniston AL
CONTRACTOR: Taylor

	REPAIRS								REPAIRS						
	DEFECT CODE	TEST DATE	TECH ID	DEFECTS * *	OBS. TEST	MON.	REMARKS		DEFECT CODE	TEST DATE	TECH ID	DEFECTS * *	OBS. TEST	MON.	REMARKS
1	2A	10/22/2015	AM	NONE	N	SC		46	2X	10/22/2015	AM	NONE	Y	SC	
2	6D	10/22/2015	AM	NONE	N	SC		47	2G	10/22/2015	AM	NONE	Y	SC	
3	6E	10/22/2015	AM	NONE	N	SC		48	3A	10/22/2015	AM	NONE	Y	SC	
4	1C	10/22/2015	AM	NONE	Y	SC		49	3B	10/22/2015	AM	NONE	Y	SC	
5	1F	10/22/2015	AM	NONE	Y	SC		50	2W	10/22/2015	AM	NONE	Y	SC	
6	1G	10/22/2015	AM	NONE	Y	SC		51	3F	10/22/2015	AM	NONE	Y	SC	
7	1H	10/22/2015	AM	NONE	Y	SC		52	3N	10/22/2015	AM	NONE	Y	SC	
8	6F	10/22/2015	AM	NONE	N	SC		53	3K	10/22/2015	AM	NONE	Y	SC	
9	1P	10/22/2015	AM	NONE	N	SC		54	3E	10/22/2015	AM	NONE	N	SC	
10	1Q	10/22/2015	AM	NONE	Y	SC		55	3J	10/22/2015	AM	NONE	Y	SC	
11	1W	10/22/2015	AM	NONE	Y	SC		56	3Q	10/22/2015	AM	NONE	Y	SC	
12	2B	10/22/2015	AM	NONE	N	SC		57	3R	10/22/2015	AM	NONE	Y	SC	
13	2C	10/22/2015	AM	NONE	Y	SC		58	3T	10/22/2015	AM	NONE	Y	SC	
14	1E	10/22/2015	AM	NONE	Y	SC		59	3S	10/22/2015	AM	NONE	Y	SC	
15	1A	10/22/2015	AM	NONE	N	SC		60	4A	10/22/2015	AM	NONE	Y	SC	
16	1I	10/22/2015	AM	NONE	Y	SC		61	3W	10/22/2015	AM	NONE	Y	SC	
17	1R	10/22/2015	AM	NONE	Y	SC		62	3X	10/22/2015	AM	NONE	Y	SC	
18	1J	10/22/2015	AM	NONE	N	SC		63	4F	10/22/2015	AM	NONE	N	SC	
19	1T	10/22/2015	AM	NONE	N	SC		64	4B	10/22/2015	AM	NONE	Y	SC	
20	1X	10/22/2015	AM	NONE	Y	SC		65	4D	10/22/2015	AM	NONE	Y	SC	
21	2E	10/22/2015	AM	NONE	Y	SC		66	4N	10/22/2015	AM	NONE	N	SC	
22	2F	10/22/2015	AM	NONE	Y	SC		67	4Q	10/22/2015	AM	NONE	Y	SC	
23	2M	10/22/2015	AM	NONE	N	SC		68	6G	10/22/2015	AM	NONE	Y	SC	
24	2J	10/22/2015	AM	NONE	N	SC		69	5B	10/22/2015	AM	NONE	Y	SC	
25	2K	10/22/2015	AM	NONE	Y	SC		70	4X	10/22/2015	AM	NONE	Y	SC	
26	1M	10/22/2015	AM	NONE	Y	SC		71	4R	10/22/2015	AM	NONE	Y	SC	
27	1N	10/22/2015	AM	NONE	Y	SC		72	4P	10/22/2015	AM	NONE	N	SC	
28	4H	10/22/2015	AM	NONE	Y	SC		73	5A	10/22/2015	AM	NONE	Y	SC	
29	4I	10/22/2015	AM	NONE	Y	SC		74	5D	10/22/2015	AM	NONE	Y	SC	
30	3I	10/22/2015	AM	NONE	Y	SC		75	5C	10/22/2015	AM	NONE	Y	SC	
31	3G	10/22/2015	AM	NONE	Y	SC		76	4S	10/22/2015	AM	NONE	Y	SC	
32	2D	10/22/2015	AM	NONE	N	SC		77	6H	10/22/2015	AM	NONE	Y	SC	
33	2H	10/22/2015	AM	NONE	N	SC		78	4W	10/22/2015	AM	NONE	Y	SC	
34	3M	10/22/2015	AM	NONE	Y	SC		79	4T	10/22/2015	AM	NONE	Y	SC	
35	3H	10/22/2015	AM	NONE	Y	SC		80	2I	10/22/2015	AM	NONE	N	SC	
36	2N	10/22/2015	AM	NONE	N	SC		81	5W	10/22/2015	AM	NONE	Y	SC	
37	2R	10/22/2015	AM	NONE	N	SC		82	4E	10/22/2015	AM	NONE	Y	SC	
38	2Q	10/22/2015	AM	NONE	N	SC		83	4C	10/22/2015	AM	NONE	Y	SC	
39	3P	10/22/2015	AM	NONE	N	SC		84	4G	10/22/2015	AM	NONE	N	SC	
40	3D	10/22/2015	AM	NONE	N	SC		85	4J	10/22/2015	AM	NONE	N	SC	
41	3C	10/22/2015	AM	NONE	Y	SC		86	4K	10/22/2015	AM	NONE	N	SC	
42	2T	10/22/2015	AM	NONE	Y	SC		87	4M	10/22/2015	AM	NONE	Y	SC	
43	2S	10/22/2015	AM	NONE	Y	SC		88	5F	10/22/2015	AM	NONE	N	SC	
44								89	5G	10/22/2015	AM	NONE	Y	SC	
45								90	5M	10/22/2015	AM	NONE	Y	SC	

* * RECORD QUANTITY OF LEAKS DETECTED AND REFERENCE NEW DEFECT CODE IN REMARKS.

GOLDER FORM : G17-tss
(January 2005)

REVIEWED BY: _KMG_____ DATE ___10/23/15_____

GOLDER ASSOCIATES INC.

GEOMEMBRANE VACUUM TEST LOG

PROJECT NUMBER: 130 2962CQA
OWNER: Solutia
LOCATION: Anniston AL

PROJECT TITLE: OU3 RA Construction
CONTRACTOR: Taylor

REPAIRS

	DEFECT CODE	TEST DATE	TECH ID	DEFECTS * *	OBS. TEST	MON.	REMARKS
1	5I	10/22/2015	AM	NONE	Y	SC	
2	5T	10/22/2015	AM	NONE	Y	SC	
3	5Q	10/22/2015	AM	NONE	Y	SC	
4	5E	10/22/2015	AM	NONE	Y	SC	
5	5J	10/22/2015	AM	NONE	Y	SC	
6	5P	10/22/2015	AM	NONE	N	SC	
7	5K	10/22/2015	AM	NONE	Y	SC	
8	5S	10/22/2015	AM	NONE	Y	SC	
9	6B	10/22/2015	AM	NONE	N	SC	
10	5X	10/22/2015	AM	NONE	Y	SC	
11	6A	10/22/2015	AM	NONE	Y	SC	
12	5R	10/22/2015	AM	NONE	Y	SC	
13	5N	10/22/2015	AM	NONE	Y	SC	
14	6C	10/22/2015	AM	NONE	Y	SC	
15							
16							
17							
18							
19							
20							
21							
22							
23							
24							
25							
26							
27							
28							
29							
30							
31							
32							
33							
34							
35							
36							
37							
38							
39							
40							
41							
42							
43							
44							
45							

REPAIRS

	DEFECT CODE	TEST DATE	TECH ID	DEFECTS * *	OBS. TEST	MON.	REMARKS
46							
47							
48							
49							
50							
51							
52							
53							
54							
55							
56							
57							
58							
59							
60							
61							
62							
63							
64							
65							
66							
67							
68							
69							
70							
71							
72							
73							
74							
75							
76							
77							
78							
79							
80							
81							
82							
83							
84							
85							
86							
87							
88							
89							
90							

* * RECORD QUANTITY OF LEAKS DETECTED AND REFERENCE NEW DEFECT CODE IN REMARKS.

GOLDER FORM : G17-tss
(January 2005)

REVIEWED BY: _KMG_____ DATE ___10/23/15_____

GOLDER ASSOCIATES INC.

APPENDIX H3.5

Geomembrane Seam Pressure Test Logs

GEOMEMBRANE SEAM PRESSURE TEST LOG

PROJECT NUMBER: 130 29G2CQA
PROJECT TITLE: OU3 RA Construction
OWNER: Solutia
LOCATION: Anniston AL
CONTRACTOR: Taylor

DATE: 10/16/2015
SHEET NUMBER: 1/1

	SEAM NUMBER	SEAM SECTION * FROM	SEAM SECTION * TO	PRESS. GAUGE NUMBER	TECH ID	TIME START	TIME FINISH	PRESSURE INITIAL	PRESSURE FINAL	OBS. TEST	RESULTS PASS/ FAIL	SEAM COMPLETE NO	SEAM COMPLETE YES	MON.	REMARKS
1	P4 / P5	WEOS	EEOS	G1	SJ	1252	1257	30	30	Y	PASS		X	SC	
2	P3 / P5	WEOS	EEOS	G2	SJ	1258	1303	30	28	Y	PASS		X	SC	
3	P2 / P3	NEOS	SEOS	G1	SJ	1333	1338	30	30	Y	PASS		X	SC	
4	P2 / P5	NEOS	SEOS	G1	SJ	1333	1338	30	30	Y	PASS		X	SC	
5	P2 / P4	NEOS	SEOS	G1	SJ	1333	1338	30	30	Y	PASS		X	SC	
6	P1 / P2	NEOS	SEOS	G2	SJ	1330	1335	30	30	N	PASS		X	SC	
7	P6 / P7	EEOS	WEOS	G1	SJ	1354	1359	30	30	Y	PASS		X	SC	
8	P8 / P9	EEOS	WEOS	G1	SJ	1425	1430	30	29	Y	PASS		X	SC	
9	P1 / P7	NEOS	SEOS	G1	SJ	1531	1536	30	30	Y	PASS		X	SC	
10	P10 / P11	EEOS	WEOS	G2	SJ	1520	1525	30	30	Y	PASS		X	SC	
11	P1 / P6	NEOS	SEOS	G1	SJ	1511	1516	30	30	Y	PASS		X	SC	
12	P8 / P11	NEOS	SEOS	G1	SJ	1642	1647	30	30	Y	PASS		X	SC	
13	P9 / P11	NEOS	SEOS	G1	SJ	1642	1647	30	30	Y	PASS		X	SC	
14	P9 / P10	NEOS	SEOS	G1	SJ	1642	1647	30	30	Y	PASS		X	SC	
15	P7 / P8	NEOS	SEOS	G2	SJ	1544	1549	30	29	N	PASS		X	SC	
16	P7 / P9	NEOS	SEOS	G2	SJ	1544	1549	30	29	N	PASS		X	SC	
17	P6 / P9	NEOS	SEOS	G2	SJ	1544	1549	30	29	N	PASS		X	SC	
18	/	-				:		:							
19	/	-				:		:							
20	/	-				:		:							

* REFERENCE SEAM ENDPOINTS FROM AND END OF SEAM (EOS), A REPAIR NUMBER,
OR A POINT LOCATION ON THE SEAM (i e, REFERENCE POINT, DISTANCE, DIRECTION FROM REF. PT.)

GCS FORM: G16
(JUNE 1992)

REVIEWED BY: KMG DATE: 11/4/2015

GOLDER ASSOCIATES

GEOMEMBRANE SEAM PRESSURE TEST LOG

PROJECT NUMBER: 130 29G2CQA
PROJECT TITLE: OU3 RA Construction
OWNER: Solutia
LOCATION: Anniston AL
CONTRACTOR: Taylor

DATE: 10/17/2015
SHEET NUMBER: 1/2

	SEAM NUMBER	SEAM SECTION * FROM	TO	PRESS. GAUGE NUMBER	TECH ID	TIME START	FINISH	PRESSURE INITIAL	FINAL	OBS. TEST	RESULTS PASS/ FAIL	SEAM COMPLETE NO	YES	MON.	REMARKS
1	P11 / P12	NEOS -	SEOS	G2	SJ	717 :	722	30 :	30	Y	PASS		X	SC	
2	P10 / P12	NEOS -	SEOS	G2	SJ	722 :	727	30 :	30	Y	PASS		X	SC	
3	P13 / P14	EEOS -	WEOS	G1	SJ	827 :	832	30 :	29	Y	PASS		X	SC	
4	P15 / P16	EEOS -	WEOS	G1	SJ	842 :	847	30 :	30	Y	PASS		X	SC	
5	P12 / P13	NEOS -	SEOS	G1	SJ	1025 :	1030	30 :	30	Y	PASS		X	SC	
6	P12 / P14	NEOS -	SEOS	G1	SJ	1025 :	1030	30 :	30	Y	PASS		X	SC	
7	P13 / P16	NEOS -	SEOS	G2	SJ	1028 :	1033	30 :	30	Y	PASS		X	SC	
8	P14 / P16	NEOS -	SEOS	G2	SJ	1028 :	1033	30 :	30	Y	PASS		X	SC	
9	P14 / P15	NEOS -	SEOS	G2	SJ	1028 :	1033	30 :	30	Y	PASS		X	SC	
10	P18 / P19	EEOS -	WEOS	G2	SJ	1049 :	1054	30 :	30	Y	PASS		X	SC	
11	P16 / P17	NEOS -	SEOS	G2	SJ	1200 :	1205	30 :	30	N	PASS		X	SC	
12	P15 / P17	NEOS -	SEOS	G2	SJ	1200 :	1205	30 :	30	N	PASS		X	SC	
13	P17 / P18	NEOS -	SEOS	G1	SJ	1253 :	1258	30 :	30	Y	PASS		X	SC	
14	P17 / P19	NEOS -	SEOS	G1	SJ	1253 :	1258	30 :	30	Y	PASS		X	SC	
15	P20 / P21	EEOS -	WEOS	G2	SJ	1353 #	1358	30 :	29	Y	PASS		X	SC	
16	P18 / P21	NEOS -	SEOS	G1	SJ	1557 :	1602	30 :	30	Y	PASS		X	SC	
17	P19 / P21	NEOS -	SEOS	G2	SJ	1600 :	1605	30 :	30	Y	PASS		X	SC	
18	P19 / P20	NEOS -	SEOS	G2	SJ	1600 :	1605	30 :	30	Y	PASS		X	SC	
19	P21 / P22	NEOS -	SEOS	G2	SJ	1522 :	1527	30 :	30	Y	PASS		X	SC	
20	P20 / P22	NEOS -	SEOS	G2	SJ	1522 :	1527	30 :	30	Y	PASS		X	SC	

* REFERENCE SEAM ENDPOINTS FROM AND END OF SEAM (EOS), A REPAIR NUMBER,
OR A POINT LOCATION ON THE SEAM (i e, REFERENCE POINT, DISTANCE, DIRECTION FROM REF. PT.)

GCS FORM: G16
(JUNE 1992)

REVIEWED BY: KMG DATE: 11/4/2015

GOLDER ASSOCIATES

GEOMEMBRANE SEAM PRESSURE TEST LOG

PROJECT NUMBER: 130 2962CQA
PROJECT TITLE: OU3 RA Construction
OWNER: Solutia
LOCATION: Anniston AL
CONTRACTOR: Taylor

DATE: 10/17/2015
SHEET NUMBER: 2/2

	SEAM NUMBER	SEAM SECTION * FROM	SEAM SECTION * TO	PRESS. GAUGE NUMBER	TECH ID	TIME START	TIME FINISH	PRESSURE INITIAL	PRESSURE FINAL	OBS. TEST	RESULTS PASS/ FAIL	SEAM COMPLETE NO	SEAM COMPLETE YES	MON.	REMARKS
1	P23 / P24	EEOS	WEOS	G1	SJ	1518	1523	30	30	Y	PASS		X	SC	
2	P25 / P26	EEOS	WEOS	G1	SJ	1547	1552	30	30	Y	PASS		X	SC	
3	P22 / P23	NEOS	SEOS	G1	SJ	1634	1639	30	30	Y	PASS		X	SC	
4	P22 / P24	NEOS	SEOS	G1	SJ	1634	1639	30	30	Y	PASS		X	SC	
5	/					:		:							
6	/					:		:							
7	/					:		:							
8	/					:		:							
9	/					:		:							
10	/					:		:							
11	/					:		:							
12	/					:		:							
13	/					:		:							
14	/					:		:							
15	/					:		:							
16	/					:		:							
17	/					:		:							
18	/					:		:							
19	/					:		:							
20	/					:		:							

* REFERENCE SEAM ENDPOINTS FROM AND END OF SEAM (EOS), A REPAIR NUMBER,
OR A POINT LOCATION ON THE SEAM (i e, REFERENCE POINT, DISTANCE, DIRECTION FROM REF. PT.)

GCS FORM: G16
(JUNE 1992)

REVIEWED BY: KMG DATE: 11/4/2015

GOLDER ASSOCIATES

GEOMEMBRANE SEAM PRESSURE TEST LOG

PROJECT NUMBER: 130 29G2CQA
PROJECT TITLE: OU3 RA Construction
OWNER: Solutia
LOCATION: Anniston AL
CONTRACTOR: Taylor

DATE: 10/18/2015
SHEET NUMBER: 1/1

	SEAM NUMBER	SEAM SECTION * FROM	SEAM SECTION * TO	PRESS. GAUGE NUMBER	TECH ID	TIME START	TIME FINISH	PRESSURE INITIAL	PRESSURE FINAL	OBS. TEST	RESULTS PASS/ FAIL	SEAM COMPLETE NO	SEAM COMPLETE YES	MON.	REMARKS
1	P23 / P26	NEOS	SEOS	G2	SJ	741	746	30	30	Y	PASS		X	SC	
2	P23 / P25	NEOS	SEOS	G3	SJ	745	750	30	30	Y	PASS		X	SC	
3	P24 / P25	NEOS	3G	G2	SJ	750	755	30	30	Y	PASS	X		SC	
4	P24 / P25	3G	SEOS	G3	SJ	754	759	30	28	Y	PASS		X	SC	
5	P28 / P29	EEOS	WEOS	G3	SJ	915	920	30	30	Y	PASS		X	SC	
6	P26 / P27	NEOS	SEOS	G2	SJ	1025	1030	30	30	Y	PASS		X	SC	
7	P25 / P27	NEOS	SEOS	G2	SJ	1025	1030	30	30	Y	PASS		X	SC	
8	P27 / P28	NEOS	SEOS	G3	SJ	1045	1050	30	30	Y	PASS		X	SC	
9	P27 / P29	NEOS	SEOS	G3	SJ	1045	1050	30	30	Y	PASS		X	SC	
10	/	-				:		:							
11	/	-				:		:							
12	/	-				:		:							
13	/	-				:		:							
14	/	-				:		:							
15	/	-				:		:							
16	/	-				:		:							
17	/	-				:		:							
18	/	-				:		:							
19	/	-				:		:							
20	/	-				:		:							

* REFERENCE SEAM ENDPOINTS FROM AND END OF SEAM (EOS), A REPAIR NUMBER,
OR A POINT LOCATION ON THE SEAM (i e, REFERENCE POINT, DISTANCE, DIRECTION FROM REF. PT.)

GCS FORM: G16
(JUNE 1992)

REVIEWED BY: KMG DATE: 11/4/2015

GOLDER ASSOCIATES

GEOMEMBRANE SEAM PRESSURE TEST LOG

PROJECT NUMBER: 130 2962CQA
PROJECT TITLE: OU3 RA Construction
OWNER: Solutia
LOCATION: Anniston AL
CONTRACTOR: Taylor

DATE: 10/19/2015
SHEET NUMBER: 1/2

	SEAM NUMBER	SEAM SECTION * FROM	TO	PRESS. GAUGE NUMBER	TECH ID	TIME START	FINISH	PRESSURE INITIAL	FINAL	OBS. TEST	RESULTS PASS/ FAIL	SEAM COMPLETE NO	YES	MON.	REMARKS
1	P28 / P30	NEOS -	SEOS	G2	SJ	1140 :	1145	30 :	30	Y	PASS		X	SC	
2	P29 / P30	NEOS -	SEOS	G2	SJ	1140 :	1145	30 :	30	Y	PASS		X	SC	
3	P30 / P31	NEOS -	SEOS	G2	SJ	712 :	717	30 :	30	Y	PASS		X	SC	
4	P32 / P33	WEOS -	EEOS	G2	SJ	746 :	751	30 :	28	Y	PASS		X	SC	
5	P31 / P33	NEOS -	SEOS	G2	SJ	933 :	938	30 :	30	Y	PASS		X	SC	
6	P31 / P32	NEOS -	SEOS	G2	SJ	933 :	938	30 :	30	Y	PASS		X	SC	
7	P33 / P34	NEOS -	SEOS	G3	SJ	938 :	943	30 :	29	Y	PASS		X	SC	
8	P32 / P34	NEOS -	SEOS	G3	SJ	938 :	943	30 :	29	Y	PASS		X	SC	
9	P35 / P36	EEOS -	WEOS	G2	SJ	946 :	951	30 :	28	Y	PASS		X	SC	
10	P34 / P35	NEOS -	SEOS	G3	SJ	1222 :	1227	30 :	30	Y	PASS		X	SC	
11	P34 / P36	NEOS -	SEOS	G3	SJ	1222 :	1227	30 :	30	Y	PASS		X	SC	
12	P35 / P37	NEOS -	SEOS	G3	SJ	1227 :	1232	30 :	30	Y	PASS		X	SC	
13	P36 / P37	NEOS -	SEOS	G3	SJ	1227 :	1232	30 :	30	Y	PASS		X	SC	
14	P38 / P39	EEOS -	WEOS	G3	SJ	1256 :	1301	30 :	29	Y	PASS		X	SC	
15	P40 / P41	EEOS -	WEOS	G3	SJ	1320 :	1325	30 :	28	Y	PASS		X	SC	
16	P37 / P38	NEOS -	SEOS	G3	SJ	1440 :	1445	30 :	30	Y	PASS		X	SC	
17	P37 / P39	NEOS -	SEOS	G3	SJ	1440 :	1445	30 :	30	Y	PASS		X	SC	
18	P38 / P41	NEOS -	SEOS	G2	SJ	1443 :	1448	30 :	30	Y	PASS		X	SC	
19	P38 / P40	NEOS -	SEOS	G2	SJ	1443 :	1448	30 :	30	Y	PASS		X	SC	
20	P39 / P40	NEOS -	SEOS	G2	SJ	1443 :	1448	30 :	30	Y	PASS		X	SC	

* REFERENCE SEAM ENDPOINTS FROM AND END OF SEAM (EOS), A REPAIR NUMBER,
OR A POINT LOCATION ON THE SEAM (i e, REFERENCE POINT, DISTANCE, DIRECTION FROM REF. PT.)

GCS FORM: G16
(JUNE 1992)

REVIEWED BY: KMG DATE: 11/4/2015

GOLDER ASSOCIATES

GEOMEMBRANE SEAM PRESSURE TEST LOG

PROJECT NUMBER: 130 2962CQA
PROJECT TITLE: OU3 RA Construction
OWNER: Solutia
LOCATION: Anniston AL
CONTRACTOR: Taylor

DATE: 10/19/2015
SHEET NUMBER: 2/2

	SEAM NUMBER	SEAM SECTION * FROM	SEAM SECTION * TO	PRESS. GAUGE NUMBER	TECH ID	TIME START	TIME FINISH	PRESSURE INITIAL	PRESSURE FINAL	OBS. TEST	RESULTS PASS/ FAIL	SEAM COMPLETE NO	SEAM COMPLETE YES	MON.	REMARKS
1	P43 / P44	EEOS	WEOS	G3	SJ	1510	1515	30	30	Y	PASS		X	SC	
2	P41 / P42	NEOS	SEOS	G3	SJ	1549	1554	30	30	Y	PASS		X	SC	
3	P40 / P42	NEOS	SEOS	G3	SJ	1549	1554	30	30	Y	PASS		X	SC	
4	/		-			:		:							
5	/		-			:		:							
6	/		-			:		:							
7	/		-			:		:							
8	/		-			:		:							
9	/		-			:		:							
10	/		-			:		:							
11	/		-			:		:							
12	/		-			:		:							
13	/		-			:		:							
14	/		-			:		:							
15	/		-			:		:							
16	/		-			:		:							
17	/		-			:		:							
18	/		-			:		:							
19	/		-			:		:							
20	/		-			:		:							

* REFERENCE SEAM ENDPOINTS FROM AND END OF SEAM (EOS), A REPAIR NUMBER,
OR A POINT LOCATION ON THE SEAM (i e, REFERENCE POINT, DISTANCE, DIRECTION FROM REF. PT.)

GCS FORM: G16
(JUNE 1992)

REVIEWED BY: KMG DATE: 11/4/2015

GOLDER ASSOCIATES

GEOMEMBRANE SEAM PRESSURE TEST LOG

PROJECT NUMBER: 130 2962CQA
PROJECT TITLE: OU3 RA Construction
OWNER: Solutia
LOCATION: Anniston AL
CONTRACTOR: Taylor

DATE: 10/20/2015
SHEET NUMBER: 1/2

	SEAM NUMBER	SEAM SECTION * FROM	TO	PRESS. GAUGE NUMBER	TECH ID	TIME START	FINISH	PRESSURE INITIAL	FINAL	OBS. TEST	RESULTS PASS/ FAIL	SEAM COMPLETE NO	YES	MON.	REMARKS
1	P42 / P44	NEOS	SEOS	G2	SJ	720	725	30	30	Y	P		X	SC	
2	P42 / P43	NEOS	4P	G2	SJ	734	739	30	30	Y	P	X		SC	
3	P42 / P43	4P	SEOS	G2	SJ	742	747	30	30	Y	P		X	SC	
4	P44 / P45	NEOS	SEOS	G2	SJ	927	932	30	30	Y	P		X	SC	
5	P43 / P45	NEOS	SEOS	G2	SJ	927	932	30	30	Y	P		X	SC	
6	P45 / P46	NEOS	SEOS	G3	SJ	928	933	30	30	Y	P		X	SC	
7	P45 / P47	NEOS	SEOS	G3	SJ	928	933	30	30	Y	P		X	SC	
8	P46 / P47	EEOS	WEOS	G3	SJ	808	813	30	28	N	P		X	SC	
9	P49 / P50	EEOS	WEOS	G3	SJ	1030	1035	30	28	Y	P		X	SC	
10	P46 / P48	NEOS	SEOS	G2	SJ	1231	1236	30	30	Y	P		X	SC	
11	P47 / P48	NEOS	SEOS	G2	SJ	1231	1236	30	30	Y	P		X	SC	
12	P48 / P50	NEOS	SEOS	G3	SJ	1233	1238	30	30	Y	P		X	SC	
13	P48 / P49	NEOS	SEOS	G3	SJ	1233	1238	30	30	Y	P		X	SC	
14	P52 / P53	WEOS	EEOS	G2	SJ	1310	1315	30	30	Y	P		X	SC	
15	P50 / P51	NEOS	SEOS	G2	SJ	1408	1413	30	30	Y	P		X	SC	
16	P49 / P51	NEOS	SEOS	G2	SJ	1408	1413	30	30	Y	P		X	SC	
17	P51 / P53	NEOS	SEOS	G3	SJ	1413	1418	30	30	Y	P		X	SC	
18	P51 / P52	NEOS	SEOS	G3	SJ	1413	1418	30	30	Y	P		X	SC	
19	P55 / P56	EEOS	WEOS	G2	SJ	1452	1457	30	29	Y	P		X	SC	
20	P53 / P54	NEOS	SEOS	G2	SJ	1526	1531	30	29	Y	P		X	SC	

* REFERENCE SEAM ENDPOINTS FROM AND END OF SEAM (EOS), A REPAIR NUMBER,
OR A POINT LOCATION ON THE SEAM (i e, REFERENCE POINT, DISTANCE, DIRECTION FROM REF. PT.)

GCS FORM: G16
(JUNE 1992)

REVIEWED BY: KMG DATE: 11/8/2015

GOLDER ASSOCIATES

GEOMEMBRANE SEAM PRESSURE TEST LOG

PROJECT NUMBER: 130 2962CQA
PROJECT TITLE: OU3 RA Construction
OWNER: Solutia
LOCATION: Anniston AL
CONTRACTOR: Taylor

DATE: 10/20/2015
SHEET NUMBER: 2/2

	SEAM NUMBER	SEAM SECTION * FROM	SEAM SECTION * TO	PRESS. GAUGE NUMBER	TECH ID	TIME START	TIME FINISH	PRESSURE INITIAL	PRESSURE FINAL	OBS. TEST	RESULTS PASS/ FAIL	SEAM COMPLETE NO	SEAM COMPLETE YES	MON.	REMARKS
1	P52 / P54	NEOS	SEOS	G3	SJ	1526	1531	30	29	Y	P		X	SC	
2	P43 / P44	WEOS	EEOS	G3	SJ	1515	1520	30	30	Y	P		X	SC	
3	/	-				:		:							
4	/	-				:		:							
5	/	-				:		:							
6	/	-				:		:							
7	/	-				:		:							
8	/	-				:		:							
9	/	-				:		:							
10	/	-				:		:							
11	/	-				:		:							
12	/	-				:		:							
13	/	-				:		:							
14	/	-				:		:							
15	/	-				:		:							
16	/	-				:		:							
17	/	-				:		:							
18	/	-				:		:							
19	/	-				:		:							
20	/	-				:		:							

* REFERENCE SEAM ENDPOINTS FROM AND END OF SEAM (EOS), A REPAIR NUMBER,
OR A POINT LOCATION ON THE SEAM (i e, REFERENCE POINT, DISTANCE, DIRECTION FROM REF. PT.)

GCS FORM: G16
(JUNE 1992)

REVIEWED BY: KMG DATE: 11/8/2015

GOLDER ASSOCIATES

GEOMEMBRANE SEAM PRESSURE TEST LOG

PROJECT NUMBER: 130 2962CQA
PROJECT TITLE: OU3 RA Construction
OWNER: Solutia
LOCATION: Anniston AL
CONTRACTOR: Taylor

DATE: 10/21/2015
SHEET NUMBER: 1/1

	SEAM NUMBER	SEAM SECTION * FROM	TO	PRESS. GAUGE NUMBER	TECH ID	TIME START	FINISH	PRESSURE INITIAL	FINAL	OBS. TEST	RESULTS PASS/ FAIL	SEAM COMPLETE NO	YES	MON.	REMARKS
1	P58 / P59	WEOS	EEOS	G3	IB	829	834	30	29	Y	P		X	SC	
2	P54 / P55	NEOS	SEOS	G3	SJ	1004	1009	30	30	N	P		X	SC	
3	P54 / P56	NEOS	SEOS	G3	SJ	1004	1009	30	30	N	P		X	SC	
4	P55 / P57	NEOS	SEOS	G3	SJ	1013	1018	30	30	N	P		X	SC	
5	P56 / P57	NEOS	SEOS	G3	SJ	1013	1018	30	30	N	P		X	SC	
6	P57 / P58	NEOS	SEOS	G2	SJ	1015	1020	30	30	N	P		X	SC	
7	P57 / P59	NEOS	SEOS	G2	SJ	1015	1020	30	30	Y	P		X	SC	
8	P58 / P60	NEOS	SEOS	G2	SJ	1035	1040	30	30	Y	P		X	SC	
9	P59 / P60	NEOS	SEOS	G2	SJ	1045	1050	30	30	Y	P		X	SC	
10	P60 / P61	NEOS	SEOS	G2	SJ	1036	1041	30	30	Y	P		X	SC	
11	P61 / P62	NEOS	SEOS	G3	SJ	1057	1102	30	30	Y	P		X	SC	
12	P62 / P63	NEOS	SEOS	G3	SJ	1105	1110	30	30	Y	P		X	SC	
13	P62 / P64	NEOS	SEOS	G3	SJ	1105	1110	30	30	Y	P		X	SC	
14	/	-				:		:							
15	/	-				:		:							
16	/	-				:		:							
17	/	-				:		:							
18	/	-				:		:							
19	/	-				:		:							
20	/	-				:		:							

* REFERENCE SEAM ENDPOINTS FROM AND END OF SEAM (EOS), A REPAIR NUMBER,
OR A POINT LOCATION ON THE SEAM (i e, REFERENCE POINT, DISTANCE, DIRECTION FROM REF. PT.)

GCS FORM: G16
(JUNE 1992)

REVIEWED BY: KMG DATE: 11/8/2015

GOLDER ASSOCIATES

APPENDIX I

GEOMEMBRANE DESTRUCTIVE SEAM TESTING

SUMMARY OF BREAK CODES

Reference: ASTM D6392-12

Schematic of Untested Specimen

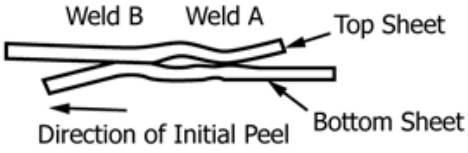

Types of Break	Location of Break Code	Break Description
	AD	Adhesion Failure
	BRK	Break in sheeting. Break can be in either top or bottom sheet.
	SE1	Break in outer edge of seam. Break can be in either top or bottom sheet.
	SE2	Break at inner edge of seam through both sheets.
	AD-BRK	Break in first seam after some adhesion failure. Break can be in either top or bottom sheet.
	SIP	Separation in the plane of the sheet. Break can be in either top or bottom sheet.

Locus-of-Break Codes for Dual Hot Wedge Seams in Unreinforced Geomembranes Tested for Seam Strength in Shear and Peel Modes

Schematic of Untested Specimen

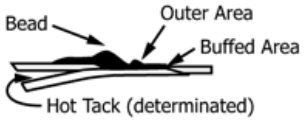

Types of Break	Location of Break Code	Break Description
	AD1	Failure in adhesion. Specimens may also delaminate under the bead and break through the thin extruded material in the outer area.
	AD2	Failure in adhesion.
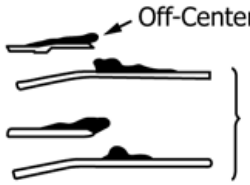	AD-WLD(1)	Break through the fillet.
	SE1	Break at seam edge in the bottom sheet (applicable to shear only).
	SE2	Break at seam edge in the top sheet (applicable to shear only).
	SE3	Break at seam edge in the bottom sheet (applicable to peel only).
	BRK1	Break in the bottom sheeting. A "B" in parebtheses following the code means the specimen broke in the buffed area.
	BRK2	Break in the top sheeting. A "B" in parebtheses following the code means the specimen broke in the buffed area.
	AD-BRK	Break in the bottom sheeting after some adhesion failure between the fillet and the bottom sheet.
	HT	Break at the edge of the hot tack for specimens which could not be delaminated in the hot tack.
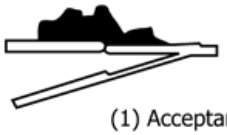	SIP	Separation in the plane of the sheet.

(1) Acceptance of AD-WLD breaks may depend on whether test values meet a minimum specification value.

Locus-of-Break Codes for Fillet Extrusion Weld Seams in Unreinforced Geomembranes Tested for Seam Strength in Shear and Peel Modes

APPENDIX I1

Area A

SUMMARY OF DESTRUCTIVE TEST RESULTS
FUSION METHOD
ASTM D6392

SOLUTIA
ONSITE OU-3 RA COVER CONSTRUCTION
ALABAMA

SAMPLE NUMBER	SHEAR STRENGTH (ppi)	SHEAR BREAK CODE (3)	SHEAR YIELD STRAIN (%)	SHEAR BREAK STRAIN (%)	PEEL (1) STRENGTH (ppi)	PEEL (1) BREAK CODE (3)	PEEL (2) STRENGTH (ppi)	PEEL (2) BREAK CODE (3)	REMARKS
DSF-1	139.3	BRK	14.3	>50	105.0	SE 1	113.8	SE 1	-
	136.1	BRK	13.5	>50	106.6	SE 1	120.2	SE 1	
	140.0	BRK	13.8	>50	107.8	SE 1	124.6	SE 1	
	141.0	BRK	13.8	>50	107.0	SE 1	116.7	SE 1	
	139.0	BRK	13.8	>50	107.2	SE 1	116.3	SE 1	
DSF-2	136.3	BRK	12.8	>50	107.1	SE 1	115.4	SE 1	-
	139.7	BRK	13.3	>50	110.9	SE 1	119.2	SE 1	
	137.0	BRK	13.3	>50	112.2	SE 1	109.5	SE 1	
	138.1	BRK	13.3	>50	112.2	SE 1	110.9	SE 1	
	135.2	BRK	12.8	>50	109.3	SE 1	108.6	SE 1	
DSF-3	138.3	BRK	13.8	>50	103.0	SE 1	99.4	SE 1	-
	137.6	BRK	12.5	>50	109.8	SE 1	97.9	SE 1	
	139.8	BRK	12.5	>50	101.5	SE 1	97.2	SE 1	
	138.8	BRK	12.0	>50	108.6	SE 1	97.9	SE 1	
	140.5	BRK	13.0	>50	107.3	SE 1	99.2	SE 1	
DSF-4	136.7	BRK	15.0	>50	93.3	SE 1	104.6	SE 1	-
	138.6	BRK	14.8	>50	104.6	SE 1	91.8	SE 1	
	138.8	BRK	14.8	>50	94.2	SE 1	96.3	SE 1	
	139.6	BRK	15.5	>50	104.4	SE 1	100.5	SE 1	
	140.6	BRK	14.8	>50	105.7	SE 1	109.3	SE 1	
DSF-5	126.3	BRK	13.3	>50	102.7	SE 1	110.8	SE 1	-
	129.7	BRK	13.5	>50	86.8	SE 1	107.9	SE 1	
	129.8	BRK	13.8	>50	101.7	SE 1	108.7	SE 1	
	130.0	BRK	13.8	>50	101.8	SE 1	105.9	SE 1	
	126.8	BRK	13.5	>50	98.7	SE 1	107.9	SE 1	
DSF-6	131.6	BRK	14.0	>50	106.3	SE 1	96.5	SE 1	-
	131.1	BRK	14.5	>50	109.4	SE 1	92.8	SE 1	
	131.2	BRK	13.8	>50	106.7	SE 1	105.0	SE 1	
	130.6	BRK	13.5	>50	104.4	SE 1	95.8	SE 1	
	131.0	BRK	14.0	>50	112.9	SE 1	97.9	SE 1	
DSF-7	133.6	BRK	13.8	>50	103.6	SE 1	95.4	SE 1	-
	133.0	BRK	13.0	>50	103.7	SE 1	107.6	SE 1	
	133.7	BRK	13.8	>50	107.0	SE 1	106.1	SE 1	
	132.6	BRK	12.8	>50	108.9	SE 1	101.3	SE 1	
	131.7	BRK	13.0	>50	111.2	SE 1	101.6	SE 1	

(1) PEEL (1) Represents outer track or top flap.

DFSUM

(2) PEEL (2) represents inner track or bottom flap.

(3) BREAK CODES BASED ON MODES ILLUSTRATED IN ASTM D6392.

SUMMARY OF DESTRUCTIVE TEST RESULTS
FUSION METHOD
ASTM D6392

SOLUTIA
ONSITE OU-3 RA COVER CONSTRUCTION
ALABAMA

SAMPLE NUMBER	SHEAR STRENGTH (ppi)	SHEAR BREAK CODE (3)	SHEAR YIELD STRAIN (%)	SHEAR BREAK STRAIN (%)	PEEL (1) STRENGTH (ppi)	PEEL (1) BREAK CODE (3)	PEEL (2) STRENGTH (ppi)	PEEL (2) BREAK CODE (3)	REMARKS
DSF-8	128.7	BRK	13.8	>50	95.1	SE 1	91.8	SE 1	-
	129.5	BRK	13.8	>50	105.8	SE 1	78.1	SE 1	
	130.2	BRK	13.3	>50	104.2	SE 1	93.7	SE 1	
	129.6	BRK	14.3	>50	105.3	SE 1	91.3	SE 1	
	129.8	BRK	14.3	>50	111.2	SE 1	87.6	SE 1	
DSF-9	129.8	BRK	14.3	>50	105.7	SE 1	92.3	SE 1	-
	129.3	BRK	14.5	>50	106.5	SE 1	86.5	SE 1	
	129.6	BRK	14.0	>50	102.6	SE 1	90.4	SE 1	
	130.0	BRK	13.8	>50	105.1	SE 1	94.7	SE 1	
	127.6	BRK	13.3	>50	106.1	SE 1	95.7	SE 1	
DSF-10	129.7	BRK	15.0	>50	104.8	SE 1	96.5	SE 1	-
	130.1	BRK	14.3	>50	91.8	SE 1	96.4	SE 1	
	130.8	BRK	14.3	>50	100.5	SE 1	95.1	SE 1	
	131.6	BRK	14.3	>50	101.6	SE 1	98.0	SE 1	
	130.8	BRK	14.0	>50	97.1	SE 1	95.4	SE 1	
DSF-11	127.4	BRK	13.8	>50	98.0	SE 1	98.8	SE 1	-
	129.4	BRK	15.0	>50	102.6	SE 1	104.7	SE 1	
	129.6	BRK	15.0	>50	101.6	SE 1	100.1	SE 1	
	131.0	BRK	14.8	>50	104.2	SE 1	98.1	SE 1	
	130.4	BRK	14.5	>50	107.4	SE 1	95.4	SE 1	
DSF-12	132.0	BRK	14.0	>50	104.3	SE 1	107.3	SE 1	-
	133.7	BRK	13.3	>50	109.0	SE 1	107.1	SE 1	
	131.2	BRK	12.8	>50	110.9	SE 1	119.2	SE 1	
	134.0	BRK	13.0	>50	117.6	SE 1	109.6	SE 1	
	134.4	BRK	13.8	>50	111.2	SE 1	110.3	SE 1	
DSF-13	132.0	BRK	15.0	>50	103.4	SE 1	103.1	SE 1	-
	132.8	BRK	16.0	>50	101.4	SE 1	111.1	SE 1	
	132.2	BRK	15.3	>50	98.2	SE 1	107.1	SE 1	
	129.9	BRK	14.8	>50	95.7	SE 1	109.9	SE 1	
	130.5	BRK	15.3	>50	98.2	SE 1	109.5	SE 1	
DSF-14	141.8	BRK	14.0	>50	103.6	SE 1	101.8	SE 1	-
	142.0	BRK	13.3	>50	106.6	SE 1	100.4	SE 1	
	140.1	BRK	13.3	>50	105.4	SE 1	111.8	SE 1	
	139.7	BRK	15.3	>50	99.0	SE 1	103.9	SE 1	
	137.8	BRK	15.0	>50	100.8	SE 1	97.2	SE 1	

(1) PEEL (1) Represents outer track or top flap.

DFSUM

(2) PEEL (2) represents inner track or bottom flap.

(3) BREAK CODES BASED ON MODES ILLUSTRATED IN ASTM D6392.

SUMMARY OF DESTRUCTIVE TEST RESULTS
FUSION METHOD
ASTM D6392

SOLUTIA
ONSITE OU-3 RA COVER CONSTRUCTION
ALABAMA

SAMPLE NUMBER	SHEAR STRENGTH (ppi)	SHEAR BREAK CODE (3)	SHEAR YIELD STRAIN (%)	SHEAR BREAK STRAIN (%)	PEEL (1) STRENGTH (ppi)	PEEL (1) BREAK CODE (3)	PEEL (2) STRENGTH (ppi)	PEEL (2) BREAK CODE (3)	REMARKS
DSF-15	136.8	BRK	13.3	>50	108.1	SE 1	102.6	SE 1	-
	135.0	BRK	13.8	>50	108.5	SE 1	104.8	SE 1	
	134.2	BRK	13.5	>50	109.7	SE 1	101.3	SE 1	
	133.8	BRK	12.5	>50	106.1	SE 1	108.5	SE 1	
	134.2	BRK	13.3	>50	111.9	SE 1	103.3	SE 1	
DSF-16	133.0	BRK	13.3	>50	93.6	SE 1	91.5	SE 1	-
	134.1	BRK	13.3	>50	93.4	SE 1	111.3	SE 1	
	134.0	BRK	14.0	>50	89.8	SE 1	101.6	SE 1	
	132.0	BRK	13.3	>50	91.6	SE 1	98.4	SE 1	
	132.6	BRK	14.0	>50	92.6	SE 1	97.4	SE 1	
DSF-17	134.5	BRK	13.3	>50	93.9	SE 1	98.9	SE 1	-
	133.2	BRK	12.8	>50	91.9	SE 1	94.7	SE 1	
	133.6	BRK	13.3	>50	92.4	SE 1	95.7	SE 1	
	134.0	BRK	11.3	>50	94.4	SE 1	99.2	SE 1	
	134.5	BRK	12.8	>50	92.3	SE 1	103.4	SE 1	
-	-	-	-	-	-	-	-	-	-
	-	-	-	-	-	-	-	-	
	-	-	-	-	-	-	-	-	
	-	-	-	-	-	-	-	-	
	-	-	-	-	-	-	-	-	
-	-	-	-	-	-	-	-	-	-
	-	-	-	-	-	-	-	-	
	-	-	-	-	-	-	-	-	
	-	-	-	-	-	-	-	-	
	-	-	-	-	-	-	-	-	
-	-	-	-	-	-	-	-	-	-
	-	-	-	-	-	-	-	-	
	-	-	-	-	-	-	-	-	
	-	-	-	-	-	-	-	-	
	-	-	-	-	-	-	-	-	
-	-	-	-	-	-	-	-	-	-
	-	-	-	-	-	-	-	-	
	-	-	-	-	-	-	-	-	
	-	-	-	-	-	-	-	-	
	-	-	-	-	-	-	-	-	

(1) PEEL (1) Represents outer track or top flap.

DFSUM

(2) PEEL (2) represents inner track or bottom flap.

(3) BREAK CODES BASED ON MODES ILLUSTRATED IN ASTM D6392.

SUMMARY OF DESTRUCTIVE TEST RESULTS
EXTRUSION METHOD

SOLUTIA
ONSITE OU-3 RA COVER CONSTRUTION
ALABAMA

SAMPLE NUMBER	SHEAR STRENGTH (ppi)	SHEAR BREAK CODE (1)	SHEAR YIELD STRAIN (%)	SHEAR BREAK STRAIN (%)	PEEL STRENGTH (ppi)	PEEL BREAK CODE (1)	REMARKS
DSX-1	126.8	BRK 1	14.0	>50	94.5	SE 3	-
	120.6	BRK 1	11.8	>50	96.5	SE 3	
	130.7	BRK 1	14.5	>50	87.8	SE 3	
	125.1	BRK 1	13.8	>50	108.5	SE 3	
	124.5	BRK 1	13.3	>50	103.3	SE 3	
-	-	-	-	-	-	-	-
	-	-	-	-	-	-	
	-	-	-	-	-	-	
	-	-	-	-	-	-	
	-	-	-	-	-	-	
-	-	-	-	-	-	-	-
	-	-	-	-	-	-	
	-	-	-	-	-	-	
	-	-	-	-	-	-	
	-	-	-	-	-	-	
-	-	-	-	-	-	-	-
	-	-	-	-	-	-	
	-	-	-	-	-	-	
	-	-	-	-	-	-	
	-	-	-	-	-	-	
-	-	-	-	-	-	-	-
	-	-	-	-	-	-	
	-	-	-	-	-	-	
	-	-	-	-	-	-	
	-	-	-	-	-	-	
-	-	-	-	-	-	-	-
	-	-	-	-	-	-	
	-	-	-	-	-	-	
	-	-	-	-	-	-	
	-	-	-	-	-	-	

(1) BREAK CODES BASED ON MODES ILLUSTRATED IN ASTM D6392.

DESUM

APPENDIX I2

Area E

SUMMARY OF DESTRUCTIVE TEST RESULTS
FUSION METHOD
ASTM D6392

SOLUTIA
ONSITE OU-3 RA COVER CONSTRUCTION - AREA E
ALABAMA

SAMPLE NUMBER	SHEAR STRENGTH (ppi)	SHEAR BREAK CODE (3)	SHEAR YIELD STRAIN (%)	SHEAR BREAK STRAIN (%)	PEEL (1) STRENGTH (ppi)	PEEL (1) BREAK CODE (3)	PEEL (2) STRENGTH (ppi)	PEEL (2) BREAK CODE (3)	REMARKS
DSF-1	138.7	BRK	14.5	>50	103.7	SE 1	101.7	SE 1	-
	139.8	BRK	14.3	>50	114.8	SE 1	100.1	SE 1	
	139.6	BRK	14.0	>50	103.2	SE 1	98.4	SE 1	
	139.2	BRK	14.5	>50	102.7	SE 1	94.4	SE 1	
	138.3	BRK	15.8	>50	108.3	SE 1	101.1	SE 1	
DSF-2	140.5	BRK	16.3	>50	108.0	SE 1	108.3	SE 1	-
	139.7	BRK	16.3	>50	117.7	SE 1	105.8	SE 1	
	139.5	BRK	15.8	>50	107.9	SE 1	108.1	SE 1	
	139.1	BRK	15.3	>50	99.3	SE 1	100.8	SE 1	
	138.4	BRK	15.5	>50	111.2	SE 1	104.3	SE 1	
DSF-3	139.5	BRK	14.8	>50	103.2	SE 1	103.7	SE 1	-
	138.8	BRK	13.5	>50	111.3	SE 1	112.9	SE 1	
	138.5	BRK	13.3	>50	112.1	SE 1	101.4	SE 1	
	139.0	BRK	14.0	>50	110.1	SE 1	98.1	SE 1	
	138.3	BRK	13.5	>50	107.7	SE 1	109.0	SE 1	
-	-	-	-	-	-	-	-	-	-
	-	-	-	-	-	-	-	-	
	-	-	-	-	-	-	-	-	
	-	-	-	-	-	-	-	-	
	-	-	-	-	-	-	-	-	
-	-	-	-	-	-	-	-	-	-
	-	-	-	-	-	-	-	-	
	-	-	-	-	-	-	-	-	
	-	-	-	-	-	-	-	-	
	-	-	-	-	-	-	-	-	
-	-	-	-	-	-	-	-	-	-
	-	-	-	-	-	-	-	-	
	-	-	-	-	-	-	-	-	
	-	-	-	-	-	-	-	-	
	-	-	-	-	-	-	-	-	
-	-	-	-	-	-	-	-	-	-
	-	-	-	-	-	-	-	-	
	-	-	-	-	-	-	-	-	
	-	-	-	-	-	-	-	-	
	-	-	-	-	-	-	-	-	

(1) PEEL (1) Represents outer track or top flap.

(2) PEEL (2) represents inner track or bottom flap.

(3) BREAK CODES BASED ON MODES ILLUSTRATED IN ASTM D6392.

DFSUM

FAILED DESTRUCTIVE SAMPLE TRACKING LOG

AREA E

PAGE _____ OF _____

PROJECT NUMBER: 130 2962CQA
OWNER: Solutia
LOCATION: Anniston AL

PROJECT TITLE: OU3 RA Construction
CONTRACTOR: Taylor

DATE 5/5/16
MONITOR SC

DESTRUCTIVE NUMBER DSF4
MACHINE NUMBER 513
SEAMER(S) ID MB

PASSING SAMPLE IN DIRECTION P DSF4P
PASSING SAMPLE IN DIRECTION N N/A EBOS

CHRONOLOGICAL SEAMING ORDER				START POINT	ILLUSTRATED RECORD OF DESTRUCTIVE SAMPLE TRACKING AND SEAM RECONSTRUCTION	FINISH POINT	
SEAM OR REPAIR NO.	SEAM DATE	START TIME			---------> ---------> ---------> DIRECTION OF SEAMING ---------> ---------> --------->		
____ / ____ SEAMING SHEET # ____ LINE # ____			PANEL # PANEL #				CONTINUED Y / N SHEET NO.
____ / ____ SEAMING SHEET # ____ LINE # ____			PANEL # PANEL #				
____ / ____ SEAMING SHEET # ____ LINE # ____			PANEL # PANEL #				(P) PREVIOUS" DIRECTION
____ / ____ SEAMING SHEET # ____ LINE # ____			PANEL # E12 PANEL # E16	SEOC	DSF4P 10FT CAP	E12 NEOS E16	
____ / ____ SEAMING SHEET # ____ LINE # ____			PANEL # E11 PANEL # E16		CAP INITIAL DESTRUCTIVE NO. DSF4 FAIL CAP DSF4	NEOS	
____ / ____ SEAMING SHEET # ____ LINE # ____			PANEL # PANEL #				
____ / ____ SEAMING SHEET # ____ LINE # ____			PANEL # PANEL #				(N) "NEXT" DIRECTION
____ / ____ SEAMING SHEET # ____ LINE # ____			PANEL # PANEL #				
____ / ____ SEAMING SHEET # ____ LINE # ____			PANEL # PANEL #				CONTINUED? Y / N SHEET NO.

NOTE: COMPLETE SEAMING ORDER INFORMATION FROM FIELD SEAMING LOGS. COMPLETE ILLUSTRATION SECTION FROM DIRECT OBSERVATION OF THE SEAMS.
ILLUSTRATE FOLLOW-UP DESTRUCTIVE SAMPLES, CAPS AND/OR RECONSTRUCTED SEAMS AND REFERERNCE REPAIR NUMBERS.
GCS FORM: G21

(JUNE 1992)

REVIEWED BY: _____ DATE: _____

GOLDER ASSOCIATES

APPENDIX I3

PCB Cells

GEOMEMBRANE SEAM DESTRUCTIVE SAMPLE LOG

PROJECT NUMBER: 130 2962CQA
PROJECT TITLE: OU3 RA Construction
OWNER: Solutia
LOCATION: Anniston AL
CONTRACTOR: Taylor
SHEET NUMBER 1/2

	DESTRUCTIVE		MACHINE	DATE	FIELD TEST RESULTS		DATE	LAB TEST STATUS	DATE OF	REMARKS
	SAMPLE NUMBER	SEAM NUMBER	NUMBER	REMOVED	PEEL (PASS/FAIL)	SHEAR (PASS/FAIL)	SHIPPED	(PASS/FAIL)	NOTIFICATION	
1	DSF1	P1/P2	609	10/21/2015	P	P	10/21/2015	P	10/22/2015	
2	DSF2	P2/P5	610	10/21/2015	P	P	10/21/2015	P	10/22/2015	
3	DSF3	P1/P6	609	10/21/2015	P	P	10/21/2015	P	10/22/2015	
4	DSF4	P6/P9	610	10/21/2015	P	P	10/21/2015	P	10/22/2015	
5	DSF5	P9/P10	609	10/21/2015	P	P	10/21/2015	P	10/22/2015	
6	DSF6	P10/P12	610	10/21/2015	P	P	10/21/2015	P	10/22/2015	
7	DSF7	P12/P14	609	10/21/2015	P	P	10/21/2015	P	10/22/2015	
8	DSF8	P14/P15	610	10/21/2015	P	P	10/21/2015	P	10/22/2015	
9	DSF9	P15/P17	609	10/21/2015	P	P	10/21/2015	P	10/22/2015	
10	DSF10	P17/P19	610	10/21/2015	P	P	10/21/2015	P	10/22/2015	
11	DSF11	P21/P22	610	10/21/2015	P	P	10/21/2015	P	10/22/2015	
12	DSF12	P18/P21	609	10/21/2015	P	P	10/21/2015	P	10/22/2015	
13	DSF13	P23/P26	609	10/21/2015	P	P	10/21/2015	P	10/22/2015	
14	DSF14	P27/P29	610	10/21/2015	P	P	10/21/2015	P	10/22/2015	
15	DSF15	P26/P27	609	10/21/2015	P	P	10/21/2015	P	10/22/2015	
16	DSF16	P28/P30	610	10/21/2015	P	P	10/21/2015	P	10/22/2015	
17	DSF17	P31/P33	609	10/21/2015	P	P	10/21/2015	P	10/22/2015	
18	DSF18	P32/P34	610	10/21/2015	P	P	10/21/2015	P	10/22/2015	
19	DSF19	P34/P36	609	10/21/2015	P	P	10/21/2015	P	10/22/2015	
20	DSF20	P36/P37	610	10/21/2015	P	P	10/21/2015	P	10/22/2015	

REVIEWED BY: KMG DATE: 11/4/2015

GCS FORM: G20
(JUNE 1992)

GOLDER ASSOCIATES

GEOMEMBRANE SEAM DESTRUCTIVE SAMPLE LOG

PROJECT NUMBER: 130 2962CQA
PROJECT TITLE: OU3 RA Construction
OWNER: Solutia
LOCATION: Anniston AL
CONTRACTOR: Taylor
SHEET NUMBER 2/2

	DESTRUCTIVE		MACHINE	DATE	FIELD TEST RESULTS		DATE	LAB TEST STATUS	DATE OF	REMARKS
	SAMPLE NUMBER	SEAM NUMBER	NUMBER	REMOVED	PEEL (PASS/FAIL)	SHEAR (PASS/FAIL)	SHIPPED	(PASS/FAIL)	NOTIFICATION	
1	DSF21	P39/P40	609	10/22/2015	P	P	10/22/2015	P	10/23/2015	
2	DSF22	P41/P42	610	10/22/2015	P	P	10/22/2015	P	10/23/2015	
3	DSF23	P42/P43	609	10/22/2015	P	P	10/22/2015	P	10/23/2015	
4	DSF24	P45/P46	610	10/22/2015	P	P	10/22/2015	P	10/23/2015	
5	DSF25	P47/P48	609	10/22/2015	P	P	10/22/2015	P	10/23/2015	
6	DSF26	P48/P50	610	10/22/2015	P	P	10/22/2015	P	10/23/2015	
7	DSF27	P51/P53	610	10/22/2015	P	P	10/22/2015	P	10/23/2015	
8	DSF28	P50/P51	609	10/22/2015	P	P	10/22/2015	P	10/23/2015	
9	DSF29	P56/P57	609	10/22/2015	P	P	10/22/2015	P	10/23/2015	
10	DSF30	P57/P58	610	10/22/2015	P	P	10/22/2015	P	10/23/2015	
11	DSF31	P62/P64	610	10/22/2015	P	P	10/22/2015	P	10/23/2015	
12	DSF32	P61/P62	609	10/22/2015	P	P	10/22/2015	P	10/23/2015	
13	DSF33	P61/P62	609	10/22/2015	P	P	10/22/2015	P	10/23/2015	
14		/		/ /	:		/ /		/ /	
15		/		/ /	:		/ /		/ /	
16		/		/ /	:		/ /		/ /	
17		/		/ /	:		/ /		/ /	
18		/		/ /	:		/ /		/ /	
19		/		/ /	:		/ /		/ /	
20		/		/ /	:		/ /		/ /	

REVIEWED BY: KMG DATE: 11/4/2015

GCS FORM: G20
(JUNE 1992)

GOLDER ASSOCIATES

SUMMARY OF DESTRUCTIVE TEST RESULTS
FUSION METHOD
ASTM D6392

SOLUTIA
ONSITE OU-3 RA CONSTRUCTION
ALABAMA

SAMPLE NUMBER	SHEAR STRENGTH (ppi)	SHEAR BREAK CODE (3)	SHEAR YIELD STRAIN (%)	SHEAR BREAK STRAIN (%)	PEEL (1) STRENGTH (ppi)	PEEL (1) BREAK CODE (3)	PEEL (2) STRENGTH (ppi)	PEEL (2) BREAK CODE (3)	REMARKS
DSF-1	130.0	BRK	17.0	>50	109.3	SE 1	102.6	SE 1	-
	128.8	BRK	18.0	>50	99.8	SE 1	98.8	SE 1	
	134.9	BRK	17.5	>50	95.4	SE 1	96.9	SE 1	
	135.9	BRK	18.0	>50	101.1	SE 1	100.0	SE 1	
	135.9	BRK	17.8	>50	101.1	SE 1	101.0	SE 1	
DSF-2	127.6	BRK	11.2	>50	101.0	SE 1	96.3	SE 1	-
	129.0	BRK	12.5	>50	106.2	SE 1	99.5	SE 1	
	133.0	BRK	13.0	>50	103.0	SE 1	98.3	SE 1	
	129.6	BRK	14.3	>50	106.1	SE 1	98.8	SE 1	
	127.9	BRK	13.3	>50	98.1	SE 1	97.9	SE 1	
DSF-3	131.3	BRK	11.2	>50	100.3	SE 1	114.0	SE 1	-
	131.5	BRK	13.3	>50	104.6	SE 1	104.1	SE 1	
	131.8	BRK	13.6	>50	106.9	SE 1	110.7	SE 1	
	131.3	BRK	13.6	>50	100.6	SE 1	102.9	SE 1	
	131.3	BRK	11.2	>50	104.9	SE 1	100.3	SE 1	
DSF-4	126.2	BRK	13.6	>50	97.6	SE 1	99.1	SE 1	-
	125.5	BRK	16.8	>50	100.9	SE 1	100.6	SE 1	
	126.3	BRK	11.2	>50	103.1	SE 1	102.1	SE 1	
	126.2	BRK	15.6	>50	100.0	SE 1	104.7	SE 1	
	125.7	BRK	15.4	>50	99.3	SE 1	100.5	SE 1	
DSF-5	130.5	BRK	11.2	>50	104.6	SE 1	114.3	SE 1	-
	132.7	BRK	13.6	>50	103.8	SE 1	106.4	SE 1	
	132.3	BRK	13.3	>50	105.3	SE 1	109.6	SE 1	
	133.4	BRK	11.5	>50	106.8	SE 1	101.2	SE 1	
	133.7	BRK	12.8	>50	111.2	SE 1	112.9	SE 1	
DSF-6	126.3	BRK	14.5	>50	105.1	SE 1	102.3	SE 1	-
	128.6	BRK	14.3	>50	108.8	SE 1	99.5	SE 1	
	126.6	BRK	14.3	>50	102.9	SE 1	99.6	SE 1	
	122.8	BRK	15.0	>50	110.8	SE 1	103.5	SE 1	
	126.6	BRK	14.3	>50	106.8	SE 1	102.2	SE 1	
DSF-7	128.3	BRK	11.2	>50	105.1	SE 1	109.0	SE 1	-
	126.6	BRK	13.3	>50	109.4	SE 1	109.0	SE 1	
	130.0	BRK	13.6	>50	111.1	SE 1	103.2	SE 1	
	128.0	BRK	14.3	>50	106.2	SE 1	105.3	SE 1	
	127.1	BRK	13.3	>50	101.3	SE 1	100.4	SE 1	

(1) PEEL (1) Represents outer track or top flap.

DFSUM

(2) PEEL (2) represents inner track or bottom flap.

(3) BREAK CODES BASED ON MODES ILLUSTRATED IN ASTM D6392.

SUMMARY OF DESTRUCTIVE TEST RESULTS
FUSION METHOD
ASTM D6392

SOLUTIA
ONSITE OU-3 RA CONSTRUCTION
ALABAMA

SAMPLE NUMBER	SHEAR STRENGTH (ppi)	SHEAR BREAK CODE (3)	SHEAR YIELD STRAIN (%)	SHEAR BREAK STRAIN (%)	PEEL (1) STRENGTH (ppi)	PEEL (1) BREAK CODE (3)	PEEL (2) STRENGTH (ppi)	PEEL (2) BREAK CODE (3)	REMARKS
DSF-8	127.4	BRK	14.8	>50	104.0	SE 1	99.1	SE 1	-
	127.4	BRK	14.8	>50	105.8	SE 1	98.5	SE 1	
	127.7	BRK	14.8	>50	110.0	SE 1	99.1	SE 1	
	128.9	BRK	15.8	>50	107.6	SE 1	100.1	SE 1	
	126.0	BRK	15.0	>50	101.8	SE 1	96.3	SE 1	
DSF-9	138.4	BRK	13.6	>50	109.9	SE 1	108.5	SE 1	-
	139.7	BRK	14.3	>50	111.5	SE 1	104.9	SE 1	
	139.1	BRK	14.5	>50	112.6	SE 1	104.3	SE 1	
	138.8	BRK	14.0	>50	115.1	SE 1	104.6	SE 1	
	138.2	BRK	14.8	>50	113.2	SE 1	104.7	SE 1	
DSF-10	138.1	BRK	15.4	>50	105.1	SE 1	102.3	SE 1	-
	138.4	BRK	15.8	>50	113.5	SE 1	107.2	SE 1	
	138.6	BRK	16.8	>50	113.1	SE 1	102.7	SE 1	
	137.4	BRK	17.6	>50	114.6	SE 1	100.4	SE 1	
	136.0	BRK	17.7	>50	113.5	SE 1	100.3	SE 1	
DSF-11	130.6	BRK	14.8	>50	93.4	SE 1	104.6	SE 1	-
	130.8	BRK	14.3	>50	95.2	SE 1	100.5	SE 1	
	129.7	BRK	16.5	>50	93.3	SE 1	99.3	SE 1	
	128.9	BRK	18.4	>50	96.8	SE 1	96.4	SE 1	
	128.5	BRK	15.6	>50	93.9	SE 1	97.0	SE 1	
DSF-12	132.3	BRK	11.2	>50	108.4	SE 1	104.6	SE 1	-
	131.9	BRK	14.8	>50	105.2	SE 1	105.2	SE 1	
	132.3	BRK	15.8	>50	108.4	SE 1	102.8	SE 1	
	131.9	BRK	16.1	>50	111.2	SE 1	97.0	SE 1	
	130.7	BRK	17.7	>50	108.1	SE 1	95.7	SE 1	
DSF-13	130.9	BRK	13.9	>50	90.0	SE 1	101.7	SE 1	-
	131.3	BRK	13.5	>50	98.9	SE 1	108.4	SE 1	
	130.7	BRK	13.7	>50	95.8	SE 1	103.8	SE 1	
	128.0	BRK	14.2	>50	91.7	SE 1	106.1	SE 1	
	126.6	BRK	13.5	>50	97.5	SE 1	105.8	SE 1	
DSF-14	136.4	BRK	13.5	>50	105.2	SE 1	107.2	SE 1	-
	135.0	BRK	12.5	>50	102.4	SE 1	117.2	SE 1	
	136.6	BRK	13.4	>50	101.4	SE 1	114.3	SE 1	
	132.4	BRK	13.9	>50	101.2	SE 1	109.5	SE 1	
	130.8	BRK	13.5	>50	101.7	SE 1	104.3	SE 1	

(1) PEEL (1) Represents outer track or top flap.

DFSUM

(2) PEEL (2) represents inner track or bottom flap.

(3) BREAK CODES BASED ON MODES ILLUSTRATED IN ASTM D6392.

SUMMARY OF DESTRUCTIVE TEST RESULTS
FUSION METHOD
ASTM D6392

SOLUTIA
ONSITE OU-3 RA CONSTRUCTION
ALABAMA

SAMPLE NUMBER	SHEAR STRENGTH (ppi)	SHEAR BREAK CODE (3)	SHEAR YIELD STRAIN (%)	SHEAR BREAK STRAIN (%)	PEEL (1) STRENGTH (ppi)	PEEL (1) BREAK CODE (3)	PEEL (2) STRENGTH (ppi)	PEEL (2) BREAK CODE (3)	REMARKS
DSF-15	125.2	BRK	14.3	>50	100.0	SE 1	97.5	SE 1	-
	126.4	BRK	14.5	>50	98.5	SE 1	100.0	SE 1	
	125.2	BRK	14.5	>50	95.4	SE 1	101.5	SE 1	
	124.9	BRK	15.1	>50	97.0	SE 1	100.6	SE 1	
	120.0	BRK	13.1	>50	90.5	SE 1	101.5	SE 1	
DSF-16	131.0	BRK	13.7	>50	95.9	SE 1	103.0	SE 1	-
	130.8	BRK	13.3	>50	102.1	SE 1	104.2	SE 1	
	130.1	BRK	14.0	>50	100.7	SE 1	104.6	SE 1	
	130.3	BRK	14.3	>50	103.6	SE 1	101.8	SE 1	
	127.6	BRK	13.3	>50	100.7	SE 1	101.2	SE 1	
DSF-17	133.7	BRK	11.5	>50	107.6	SE 1	102.3	SE 1	-
	135.1	BRK	13.4	>50	103.9	SE 1	106.4	SE 1	
	135.1	BRK	12.7	>50	103.3	SE 1	99.8	SE 1	
	133.8	BRK	13.1	>50	102.9	SE 1	103.9	SE 1	
	129.3	BRK	13.2	>50	98.5	SE 1	101.1	SE 1	
DSF-18	137.4	BRK	12.8	>50	119.4	SE 1	103.7	SE 1	-
	138.0	BRK	13.0	>50	120.5	SE 1	106.0	SE 1	
	137.7	BRK	13.9	>50	103.8	SE 1	104.1	SE 1	
	136.0	BRK	13.9	>50	113.3	SE 1	110.1	SE 1	
	131.8	BRK	13.0	>50	111.8	SE 1	106.2	SE 1	
DSF-19	137.3	BRK	13.5	>50	112.8	SE 1	105.6	SE 1	-
	139.9	BRK	13.1	>50	108.9	SE 1	111.7	SE 1	
	138.4	BRK	12.4	>50	121.4	SE 1	108.4	SE 1	
	137.3	BRK	14.3	>50	117.4	SE 1	112.3	SE 1	
	136.2	BRK	13.5	>50	107.5	SE 1	96.6	SE 1	
DSF-20	135.4	BRK	14.2	>50	98.8	SE 1	96.8	SE 1	-
	136.6	BRK	13.4	>50	95.5	SE 1	99.2	SE 1	
	135.1	BRK	13.8	>50	98.0	SE 1	97.7	SE 1	
	134.0	BRK	14.8	>50	97.6	SE 1	92.8	SE 1	
	131.3	BRK	13.4	>50	90.9	SE 1	93.0	SE 1	
DSF-21	142.4	BRK	12.0	>50	100.5	SE 1	108.2	SE 1	-
	142.6	BRK	12.5	>50	101.4	SE 1	107.8	SE 1	
	141.7	BRK	12.3	>50	100.1	SE 1	105.4	SE 1	
	141.8	BRK	12.8	>50	102.1	SE 1	106.1	SE 1	
	141.7	BRK	12.5	>50	100.2	SE 1	108.3	SE 1	

(1) PEEL (1) Represents outer track or top flap.
(2) PEEL (2) represents inner track or bottom flap.
(3) BREAK CODES BASED ON MODES ILLUSTRATED IN ASTM D6392.

DFSUM

SUMMARY OF DESTRUCTIVE TEST RESULTS
FUSION METHOD
ASTM D6392

SOLUTIA
ONSITE OU-3 RA CONSTRUCTION
ALABAMA

SAMPLE NUMBER	SHEAR STRENGTH (ppi)	SHEAR BREAK CODE (3)	SHEAR YIELD STRAIN (%)	SHEAR BREAK STRAIN (%)	PEEL (1) STRENGTH (ppi)	PEEL (1) BREAK CODE (3)	PEEL (2) STRENGTH (ppi)	PEEL (2) BREAK CODE (3)	REMARKS
DSF-22	141.0	BRK	13.3	>50	102.3	SE 1	102.2	SE 1	-
	140.9	BRK	13.3	>50	100.2	SE 1	104.6	SE 1	
	141.0	BRK	13.8	>50	102.9	SE 1	108.1	SE 1	
	142.2	BRK	13.0	>50	102.7	SE 1	102.3	SE 1	
	141.9	BRK	13.0	>50	105.2	SE 1	105.0	SE 1	
DSF-23	144.5	BRK	13.3	>50	105.1	SE 1	102.0	SE 1	-
	144.9	BRK	13.0	>50	101.4	SE 1	80.7	SE 1	
	143.8	BRK	13.0	>50	105.0	SE 1	110.1	SE 1	
	143.1	BRK	13.3	>50	100.7	SE 1	103.9	SE 1	
	142.2	BRK	13.3	>50	99.5	SE 1	103.5	SE 1	
DSF-24	145.8	BRK	12.5	>50	102.6	SE 1	102.3	SE 1	-
	144.2	BRK	12.0	>50	110.8	SE 1	103.6	SE 1	
	145.4	BRK	11.8	>50	101.6	SE 1	104.9	SE 1	
	144.9	BRK	11.8	>50	107.0	SE 1	106.5	SE 1	
	144.2	BRK	11.8	>50	110.0	SE 1	102.4	SE 1	
DSF-25	140.5	BRK	13.0	>50	105.0	SE 1	95.8	SE 1	-
	141.5	BRK	13.3	>50	102.4	SE 1	97.7	SE 1	
	141.5	BRK	13.3	>50	104.1	SE 1	102.9	SE 1	
	142.1	BRK	13.3	>50	95.6	SE 1	102.6	SE 1	
	142.9	BRK	12.8	>50	105.0	SE 1	101.6	SE 1	
DSF-26	147.7	BRK	14.5	>50	116.9	SE 1	108.3	SE 1	-
	146.2	BRK	15.0	>50	107.3	SE 1	105.0	SE 1	
	144.9	BRK	14.8	>50	108.8	SE 1	108.9	SE 1	
	144.7	BRK	14.5	>50	110.3	SE 1	98.7	SE 1	
	144.0	BRK	15.0	>50	107.2	SE 1	100.2	SE 1	
DSF-27	147.2	BRK	14.0	>50	113.9	SE 1	110.1	SE 1	-
	146.7	BRK	13.8	>50	118.1	SE 1	114.6	SE 1	
	147.9	BRK	14.0	>50	111.0	SE 1	118.2	SE 1	
	145.9	BRK	13.0	>50	102.6	SE 1	117.3	SE 1	
	144.6	BRK	13.0	>50	103.7	SE 1	114.0	SE 1	
DSF-28	140.6	BRK	12.8	>50	96.0	SE 1	97.0	SE 1	-
	140.1	BRK	12.8	>50	112.1	SE 1	86.1	SE 1	
	141.4	BRK	13.3	>50	89.6	**AD BRK (17%)**	92.1	SE 1	
	140.6	BRK	13.8	>50	99.1	SE 1	98.0	SE 1	
	140.3	BRK	14.3	>50	98.5	SE 1	95.2	SE 1	

(1) PEEL (1) Represents outer track or top flap.

(2) PEEL (2) represents inner track or bottom flap.

(3) BREAK CODES BASED ON MODES ILLUSTRATED IN ASTM D6392.

DFSUM

SUMMARY OF DESTRUCTIVE TEST RESULTS
FUSION METHOD
ASTM D6392

SOLUTIA
ONSITE OU-3 RA CONSTRUCTION
ALABAMA

SAMPLE NUMBER	SHEAR STRENGTH (ppi)	SHEAR BREAK CODE (3)	SHEAR YIELD STRAIN (%)	SHEAR BREAK STRAIN (%)	PEEL (1) STRENGTH (ppi)	PEEL (1) BREAK CODE (3)	PEEL (2) STRENGTH (ppi)	PEEL (2) BREAK CODE (3)	REMARKS
DSF-29	140.9	BRK	12.5	>50	102.0	SE 1	101.7	SE 1	-
	142.1	BRK	12.8	>50	101.7	SE 1	105.9	SE 1	
	141.8	BRK	12.3	>50	100.9	SE 1	105.5	SE 1	
	141.3	BRK	12.3	>50	104.4	SE 1	106.2	SE 1	
	140.6	BRK	12.8	>50	100.7	SE 1	102.9	SE 1	
DSF-30	140.3	BRK	13.3	>50	115.8	SE 1	106.1	SE 1	-
	140.9	BRK	13.0	>50	115.0	SE 1	100.7	SE 1	
	140.0	BRK	12.8	>50	115.7	SE 1	101.4	SE 1	
	140.9	BRK	12.5	>50	120.4	SE 1	104.1	SE 1	
	140.5	BRK	12.8	>50	124.9	SE 1	102.0	SE 1	
DSF-31	135.6	BRK	13.3	>50	107.7	SE 1	99.2	SE 1	-
	136.2	BRK	13.3	>50	107.2	SE 1	102.6	SE 1	
	137.9	BRK	13.3	>50	104.4	SE 1	104.1	SE 1	
	136.3	BRK	13.0	>50	102.4	SE 1	99.5	SE 1	
	129.4	BRK	12.5	>50	101.7	SE 1	103.5	SE 1	
DSF-32	139.7	BRK	13.3	>50	110.0	SE 1	110.6	SE 1	-
	140.3	BRK	13.8	>50	107.6	SE 1	105.7	SE 1	
	140.6	BRK	13.3	>50	109.0	SE 1	103.6	SE 1	
	139.4	BRK	13.0	>50	104.5	SE 1	104.6	SE 1	
	138.1	BRK	13.3	>50	100.8	SE 1	101.2	SE 1	
DSF-33	141.4	BRK	12.5	>50	102.8	SE 1	111.1	SE 1	-
	141.7	BRK	12.3	>50	101.8	SE 1	109.3	SE 1	
	141.6	BRK	13.0	>50	95.5	SE 1	99.2	SE 1	
	142.2	BRK	15.3	>50	93.5	SE 1	85.3	SE 1	
	142.5	BRK	14.0	>50	105.5	SE 1	100.1	SE 1	
-	-	-	-	-	-	-	-	-	-
	-	-	-	-	-	-	-	-	
	-	-	-	-	-	-	-	-	
	-	-	-	-	-	-	-	-	
	-	-	-	-	-	-	-	-	
-	-	-	-	-	-	-	-	-	-
	-	-	-	-	-	-	-	-	
	-	-	-	-	-	-	-	-	
	-	-	-	-	-	-	-	-	
	-	-	-	-	-	-	-	-	

(1) PEEL (1) Represents outer track or top flap.
(2) PEEL (2) represents inner track or bottom flap.
(3) BREAK CODES BASED ON MODES ILLUSTRATED IN ASTM D6392.

DFSUM

APPENDIX J

GEOMEMBRANE DEFECT AND REPAIR LOGS

Geomembrane Repair Summary

Repair Type	Number of Repairs			Total
	Area A	Area E	PCB Cells	
P - Patch	38	27	90	155
C - Cap	0	4	2	6
RS - Reconstructed Seam	0	0	0	0
G&W - Grind Weld	1	0	0	1
BS - Boot / Skirt	15	0	0	15
BS/CAP - Boot / Skirt and Cap	1	2	0	3
BS/P - Boot / Skirt and Patch	1	0	0	1
BEAD - Resin Bead	0	0	10	10
EXT - Extension	3	0	0	3

APPENDIX J1

Area A

GEOMEMBRANE DEFECT LOG

PROJECT NUMBER: 130 2962CQA
PROJECT TITLE: OU3 RA Construction
OWNER: Solutia
LOCATION: Anniston AL
CONTRACTOR: Taylor

SHEET NUMBER 1

DEFECT CODE	DEFECT LOCATION SEAM, PANEL OR REPAIR NO.	DEFECT LOCATION DESCRIPTION	DEFECT TYPE	LOG DATE	MON.	REMARKS	** REPAIR DATE	** TEST DATE
A	A1/A2	8' E of WEOS	BS	3/16/2016	SC		3/22/2016	3/22/2016
B	A5/A6	7' E of WEOS	BS	3/17/2016	SC		3/22/2016	3/22/2016
C	A3/A4	5' E of WEOS	DS	3/18/2016	SC	DSF-1	3/20/2016	3/20/2016
D	A4/A5	5' E of WEOS	DS	3/19/2016	SC	DSF-2	3/20/2016	3/20/2016
E	A8/A9	Intersect with A10	T	3/20/2016	SC		3/20/2016	3/20/2016
F	A9/A10	Intersect with A11	T	3/21/2016	SC		3/20/2016	3/20/2016
G	A10/A11	11' W of EEOS	DS	3/22/2016	SC	DSF-3	3/20/2016	3/20/2016
H	A12	70' W of EEOP 5' S	BS	3/23/2016	SC		3/22/2016	3/22/2016
I	A11/A12	Intersect with A13	T	3/24/2016	SC	Covered by 1J	-	-
J	A11/A12	3' E of WEOS	DS	3/25/2016	SC	DSF-4	3/20/2016	3/20/2016
K	A12/A13	Intersect with A14	T	3/17/2016	SC		3/20/2016	3/20/2016
M	A12/A14	207' E of WEOS	DS	3/18/2016	SC	DSF-5	3/20/2016	3/20/2016
N	A14/A15	215' E of WEOS	DS	3/19/2016	SC	DSF-6	3/20/2016	3/20/2016
P	A17/A18	88' E of WEOS	DS	3/20/2016	SC	DSF-7	3/20/2016	3/20/2016
Q	A18/A19	58' E of WEOS	DS	3/21/2016	SC	DSF-8	3/20/2016	3/20/2016
R	A19/A20	80' W of EEOS	DS	3/22/2016	SC	DSF-9	3/20/2016	3/20/2016
S	A20/A22	Intersect with A23	T	3/23/2016	SC		3/20/2016	3/20/2016
T	A20/A21	Intersect with A22	T	3/24/2016	SC	Covered by 2A	-	-
W	A20/A23	30' W of EEOS	DS	3/25/2016	SC	DSF-10	3/20/2016	3/20/2016
X	A20/A22	8' E Oof WEOS 51' N	BS	3/26/2016	SC	VAULT	3/21/2016	3/22/2016

AD - ANIMAL RELATED DAMAGE
B - UNDISPERSED RESIN BEAD
BO - FUSION WELDER BURN
BS - BOOT/SKIRT FOR FML PENETRATION
CO - CHANGE OF OVERLAP
CR - CREASE
D - INSTALLATION DAMAGE
DS-# - DESTRUCTIVE TEST NUMBER
EE - EARTHWORK EQUIPMENT DAMAGE
EXT - EXTENSION
FM - FISHMOUTH
FS - FAILED SEAM LENGTH
FTS - FIELD TEST STRIP
HT - HEAT TACK BURN
IO - INSUFFICIENT OVERLAY (UNDER SPEC.)
MD - MANUFACTURER/DELIVERY DAMAGE
PT - PRESSURE TEST CUT
SI - SOIL SURFACE IRREGULARITY
SL - SLAG ON TEXTURED SHEET
T - THREE PANEL INTERSECTION
VL - VACUUM TEST LEAK
WR - WRINKLE
WS - WELDER RESTART
OTHER _____

** COLUMNS TO BE USED BY THE DATA REVIEWER ONLY.

REVIEWED BY: KMG DATE: 3/23/2016

GCS FORM: G18
(JUNE 1992)

GOLDER ASSOCIATES

GEOMEMBRANE DEFECT LOG

PROJECT NUMBER: 130 2962CQA
PROJECT TITLE: OU3 RA Construction
OWNER: Solutia
LOCATION: Anniston AL
CONTRACTOR: Taylor

SHEET NUMBER 2

DEFECT CODE	DEFECT LOCATION SEAM, PANEL OR REPAIR NO.	DEFECT LOCATION DESCRIPTION	DEFECT TYPE	LOG DATE	MON.	REMARKS	** REPAIR DATE	** TEST DATE
A	A20/A21	42' W of EEOS 4' N	BS	3/17/2016	SC	VAULT (covers A21/A22)	3/21/2016	3/22/2016
B	A20/A23	26' W of EEOS	WS	3/17/2016	SC		3/20/2016	3/20/2016
C	A22/A23	Intersect with A24	TYPE	3/17/2016	SC		3/20/2016	3/20/2016
D	A21/A22	Intersect with A25	T/BS	3/17/2016	SC	Covered by 2A	-	-
E	A21/A24	9' W of EEOS	DS	3/17/2016	SC	DSF11	3/20/2016	3/20/2016
F	A24/A25	10' W of EEOS 2' S	BS	3/17/2016	SC		3/21/2016	3/22/2016
G	A24/A25	183' W of EEOS	BS	3/17/2016	SC		3/21/2016	3/22/2016
H	A24/A25	9' E of WEOS	BS	3/17/2016	SC		3/21/2016	3/22/2016
I	A24/A25	20' E of WEOS	BS	3/17/2016	SC		3/21/2016	3/22/2016
J	A25/A26	18' E of WEOS 5'S	BS/WS	3/18/2016	SC		3/21/2016	3/22/2016
K	A26/A27	130' W of EEOS	DS	3/18/2016	SC	DSF12	3/20/2016	3/20/2016
M	A27/A28	20' E of WEOS	DS	3/18/2016	SC	DSF13	3/20/2016	3/20/2016
N	A28/A29	162' E of WEOS	DS	3/18/2016	SC	DSF14	3/20/2016	3/20/2016
P	A31/A32	Intersect with A33	T	3/18/2016	SC		3/21/2016	3/22/2016
Q	A30/A32	Intersect with A33	T	3/18/2016	SC		3/21/2016	3/22/2016
R	A31/A32	WEOS	DS	3/18/2016	SC	DSF15	3/20/2016	3/20/2016
S	A30/A32	132' W of EEOS	DS	3/18/2016	SC	DSF16	3/20/2016	3/20/2016
T	A30/A32	WEOS	DS	3/18/2016	SC	DSF17	3/20/2016	3/20/2016
W	A30/A32	40' E of WEOS 4'S	WR/CR	3/18/2016	SC		3/20/2016	3/20/2016
X	A31/A32	5'W of EEOS 6'N	BS	3/18/2016	SC		3/21/2016	3/22/2016

AD - ANIMAL RELATED DAMAGE
B - UNDISPERSED RESIN BEAD
BO - FUSION WELDER BURN
BS - BOOT/SKIRT FOR FML PENETRATION
CO - CHANGE OF OVERLAP
CR - CREASE
D - INSTALLATION DAMAGE
DS-# - DESTRUCTIVE TEST NUMBER
EE - EARTHWORK EQUIPMENT DAMAGE
EXT - EXTENSION
FM - FISHMOUTH
FS - FAILED SEAM LENGTH
FTS - FIELD TEST STRIP
HT - HEAT TACK BURN
IO - INSUFFICIENT OVERLAY (UNDER SPEC.)
MD - MANUFACTURER/DELIVERY DAMAGE
PT - PRESSURE TEST CUT
SI - SOIL SURFACE IRREGULARITY
SL - SLAG ON TEXTURED SHEET
T - THREE PANEL INTERSECTION
VL - VACUUM TEST LEAK
WR - WRINKLE
WS - WELDER RESTART
OTHER _____

** COLUMNS TO BE USED BY THE DATA REVIEWER ONLY.

REVIEWED BY: KMG DATE: 3/23/2016

GCS FORM: G18
(JUNE 1992)

GOLDER ASSOCIATES

GEOMEMBRANE DEFECT LOG

PROJECT NUMBER: 130 2962CQA
PROJECT TITLE: OU3 RA Construction
OWNER: Solutia
LOCATION: Anniston AL
CONTRACTOR: Taylor

SHEET NUMBER 3

DEFECT CODE	DEFECT LOCATION SEAM, PANEL OR REPAIR NO.	DEFECT LOCATION DESCRIPTION	DEFECT TYPE	LOG DATE	MON.	REMARKS	** REPAIR DATE	** TEST DATE
A	A32/A33	8'S of NEOS 2'E	BS	3/18/2016	SC		3/21/2016	3/22/2016
B	A32/A33	8'S of NEOS 2'W	DEFECT	3/18/2016	SC		3/21/2016	3/22/2016
C	A30/A33	4' E of WEOS 8'S	BS	3/18/2016	SC		3/21/2016	3/22/2016
D	A20/A21	2'W of EEOS	DEFECT	3/20/2016	SC		3/20/2016	3/20/2016
E	A21/A24	3'W of EEOS 8'N	DEFECT	3/20/2016	SC		3/20/2016	3/20/2016
F	A25/A26	EEOS	PT	3/20/2016	SC		3/20/2016	3/20/2016
G	A26/A27	EEOS	PT	3/20/2016	SC		3/20/2016	3/20/2016
H	A27/A28	EEOS	PT	3/20/2016	SC		3/20/2016	3/20/2016
I	A28/A29	EEOS	PT	3/20/2016	SC		3/20/2016	3/20/2016
J	A29/A30	EEOS	PT	3/20/2016	SC		3/20/2016	3/20/2016
K	A29/A30	5'W of EEOS 8'N	D	3/20/2016	SC		3/20/2016	3/20/2016
M	A1/A2	12'W of EEOS 4'S	D	3/21/2016	SC	BEAD	3/22/2016	3/22/2016
N	A31/A33	4'W of EEOS 7'N	D	3/21/2016	SC		3/21/2016	3/22/2016
P	A31/A33	17/W of EEOS 11'N	BS	3/21/2016	SC		3/21/2016	3/22/2016
Q	A8/A10	WEOS	BS	3/21/2016	SC	VAULT	3/22/2016	3/22/2016
R	A20/A21	29'W of EEOS 12'N	DSX	3/21/2016	SC		3/21/2016	3/22/2016
S	A33	EEOP N to S	EXT	3/21/2016	SC		3/21/2016	3/22/2016
T	A31	EEOP 5'N	EXT	3/21/2016	SC		3/21/2016	3/22/2016
W	A6/A7	2'W of EEOS 3'S	BS	3/22/2016	SC		3/22/2016	3/22/2016
X	A1/A8/A9/A11/A12	EEOP's 2' Extension	EXT	3/22/2016	SC		3/22/2016	3/22/2016

AD - ANIMAL RELATED DAMAGE
B - UNDISPERSED RESIN BEAD
BO - FUSION WELDER BURN
BS - BOOT/SKIRT FOR FML PENETRATION
CO - CHANGE OF OVERLAP
CR - CREASE
D - INSTALLATION DAMAGE
DS-# - DESTRUCTIVE TEST NUMBER
EE - EARTHWORK EQUIPMENT DAMAGE
EXT - EXTENSION
FM - FISHMOUTH
FS - FAILED SEAM LENGTH
FTS - FIELD TEST STRIP
HT - HEAT TACK BURN
IO - INSUFFICIENT OVERLAY (UNDER SPEC.)
MD - MANUFACTURER/DELIVERY DAMAGE
PT - PRESSURE TEST CUT
SI - SOIL SURFACE IRREGULARITY
SL - SLAG ON TEXTURED SHEET
T - THREE PANEL INTERSECTION
VL - VACUUM TEST LEAK
WR - WRINKLE
WS - WELDER RESTART
OTHER _____

** COLUMNS TO BE USED BY THE DATA REVIEWER ONLY.

REVIEWED BY: KMG DATE: 3/23/2016

GCS FORM: G18
(JUNE 1992)

GEOMEMBRANE DEFECT LOG

PROJECT NUMBER: 130 2962CQA
PROJECT TITLE: OU3 RA Construction
OWNER: Solutia
LOCATION: Anniston AL
CONTRACTOR: Taylor

SHEET NUMBER 4

DEFECT CODE	DEFECT LOCATION SEAM, PANEL OR REPAIR NO.	DEFECT LOCATION DESCRIPTION	DEFECT TYPE	LOG DATE	MON.	REMARKS	** REPAIR DATE	** TEST DATE
A	A1/A8	13'W of EEOS 6'S	BS	3/30/2016	SC		3/30/2016	3/30/2016
B	A31/A32	17'W of EEOS 3'N	BS	3/30/2016	SC		3/30/2016	3/30/2016
C								
D								
E								
F								
G								
H								
I								
J								
K								
M								
N								
P								
Q								
R								
S								
T								
W								
X								

AD - ANIMAL RELATED DAMAGE
B - UNDISPERSED RESIN BEAD
BO - FUSION WELDER BURN
BS - BOOT/SKIRT FOR FML PENETRATION
CO - CHANGE OF OVERLAP
CR - CREASE
D - INSTALLATION DAMAGE
DS-# - DESTRUCTIVE TEST NUMBER
EE - EARTHWORK EQUIPMENT DAMAGE
EXT - EXTENSION
FM - FISHMOUTH
FS - FAILED SEAM LENGTH
FTS - FIELD TEST STRIP
HT - HEAT TACK BURN
IO - INSUFFICIENT OVERLAY (UNDER SPEC.)
MD - MANUFACTURER/DELIVERY DAMAGE
PT - PRESSURE TEST CUT
SI - SOIL SURFACE IRREGULARITY
SL - SLAG ON TEXTURED SHEET
T - THREE PANEL INTERSECTION
VL - VACUUM TEST LEAK
WR - WRINKLE
WS - WELDER RESTART
OTHER _____

** COLUMNS TO BE USED BY THE DATA REVIEWER ONLY.

REVIEWED BY: KMG DATE: 3/31/2016

GCS FORM: G18
(JUNE 1992)

GOLDER ASSOCIATES

GEOMEMBRANE REPAIR LOG

PROJECT NUMBER: 130 2962CQA
PROJECT TITLE: OU3 RA Construction
OWNER: Solutia
LOCATION: Anniston AL
CONTRACTOR: Taylor

PASSING TRIAL SEAMS

NO.	TIME	TECH. ID
TX01	854	MN
TX02	1250	MN

MACHINE NUMBER 62

DATE 3/20/2016

SHEET NO. 1/2

	DEFECT CODE	REPAIR DATE	APPROX. TIME	REPAIR TYPE	APPROX. DIMENSION	WELD TECH.	MON.	REMARKS
1	1C	3/20/2016	904	P	2X4	MN	SC	
2	1D	3/20/2016	916	P	2X4	MN	SC	
3	1E	3/20/2016	917	P	1X1	MN	SC	
4	1F	3/20/2016	921	P	1X1	MN	SC	
5	1G	3/20/2016	935	P	2X4	MN	SC	
6	1J	3/20/2016	930	P	2X4	MN	SC	
7	1K	3/20/2016	934	P	1X1	MN	SC	
8	1P	3/20/2016	937	P	2X4	MN	SC	
9	1Q	3/20/2016	942	P	2X4	MN	SC	
10	1N	3/20/2016	949	P	2X4	MN	SC	
11	1M	3/20/2016	955	P	2X4	MN	SC	-
12	1R	3/20/2016	1009	P	2X4	MN	SC	
13	1S	3/20/2016	1012	P	1X1	MN	SC	
14	2B	3/20/2016	1016	P	1X2	MN	SC	
15	1W	3/20/2016	1021	P	2X4	MN	SC	
16	2C	3/20/2016	1025	P	1X1	MN	SC	
17	3D	3/20/2016	1030	P	1X1	MN	SC	
18	2E	3/20/2016	1031	P	2X4	MN	SC	
19	3E	3/20/2016	1040	P	1X1	MN	SC	
20	2K	3/20/2016	1054	P	2X4	MN	SC	
21	3F	3/20/2016	1109	P	1X1	MN	SC	
22	3G	3/20/2016	1113	P	1X1	MN	SC	
23	3H	3/20/2016	1135	P	1X1	MN	SC	
24	3I	3/20/2016	1149	P	1X1	MN	SC	
25	3J	3/20/2016	1200	P	2X3	MN	SC	

REPAIR TYPE: P - PATCH, C - CAP, RS - RECONSTRUCTED SEAM, G&W - GRIND WELD

REVIEWED BY: KMG_____ DATE _3/22/2016_____

GCS FORM: G19
(JUNE 1992)

GOLDER ASSOCIATES

GEOMEMBRANE REPAIR LOG

PROJECT NUMBER: 130 2962CQA
PROJECT TITLE: OU3 RA Construction
OWNER: Solutia
LOCATION: Anniston AL
CONTRACTOR: Taylor

PASSING TRIAL SEAMS

NO.	TIME	TECH. ID
TX01	854	MN
TX02	1250	MN

MACHINE NUMBER 62

DATE 3/20/2016

SHEET NO. 2/2

	DEFECT CODE	REPAIR DATE	APPROX. TIME	REPAIR TYPE	APPROX. DIMENSION	WELD TECH.	MON.	REMARKS
1	3K	3/20/2016	1203	P	1X1	MN	SC	
2	2N	3/20/2016	1308	P	2X4	MN	SC	
3	2S	3/20/2016	1312	P	2X4	MN	SC	
4	2W	3/20/2016	1320	P	2X4	MN	SC	
5	2T	3/20/2016	1330	P	2X4	MN	SC	
6	2R	3/20/2016	1324	P	2X4	MN	SC	
7	2M	3/20/2016	1345	P	2X4	MN	SC	
8								
9								
10								
11								-
12								
13								
14								
15								
16								
17								
18								
19								
20								
21								
22								
23								
24								
25								

REPAIR TYPE: P - PATCH, C - CAP, RS - RECONSTRUCTED SEAM, G&W - GRIND WELD

REVIEWED BY: KMG_____ DATE _3/22/2016_____

GCS FORM: G19
(JUNE 1992)

GOLDER ASSOCIATES

GEOMEMBRANE REPAIR LOG

PROJECT NUMBER: 130 2962CQA
PROJECT TITLE: OU3 RA Construction
OWNER: Solutia
LOCATION: Anniston AL
CONTRACTOR: Taylor

PASSING TRIAL SEAMS

NO.	TIME	TECH. ID
TX01	1035	MN
TX02	1244	AL
TX03	1245	MN
TX04	1246	BP

MACHINE NUMBER 62

DATE 3/21/2016

SHEET NO. 1/1

	DEFECT CODE	REPAIR DATE	APPROX. TIME	REPAIR TYPE	APPROX. DIMENSION	WELD TECH.	MON.	REMARKS
1	2A	3/21/2016	1115	BS/CAP	22X16	MN	SC	Covers 2D/cap
2	3R	3/21/2016	1325	P	2X4	MN	SC	
3	1X	3/21/2016	1340	BS	12X12	MN	SC	
4	3C	3/21/2016	1434	BS	3X3	MN	SC	
5	2Q	3/21/2016	1440	P	1X1	MN	SC	
6	3B	3/21/2016	1444	P	1X1	MN	SC	
7	2P	3/21/2016	1446	P	1X1	MN	SC	
8	2F	3/21/2016	1430	BS	3X4	MN	SC	
9	3A	3/21/2016	1450	BS	3X3	MN	SC	
10								
11								
12								
13								
14								
15								
16								
17								
18								
19								
20								
21								
22								
23								
24								
25								

REPAIR TYPE: P - PATCH, C - CAP, RS - RECONSTRUCTED SEAM, G&W - GRIND WELD

REVIEWED BY: KMG_____ DATE 3/22/2016_____

GCS FORM: G19
(JUNE 1992)

GOLDER ASSOCIATES

GEOMEMBRANE REPAIR LOG

PROJECT NUMBER: 130 2962CQA
PROJECT TITLE: OU3 RA Construction
OWNER: Solutia
LOCATION: Anniston AL
CONTRACTOR: Taylor

PASSING TRIAL SEAMS

NO.	TIME	TECH. ID
TX05	1512	MN

MACHINE NUMBER 51

DATE 3/21/2016

SHEET NO. 1/1

	DEFECT CODE	REPAIR DATE	APPROX. TIME	REPAIR TYPE	APPROX. DIMENSION	WELD TECH.	MON.	REMARKS
1	2X	3/21/2016	1525	P	3X3	IB	SC	
2	3N	3/21/2016	1528	P	1X1	IB	SC	
3	3P	3/21/2016	1535	BS	4X4	IB	SC	
4	3S	3/21/2016	1547	EXT	2X22	IB	SC	
5	3T	3/21/2016	1555	EXT	4X5	IB	SC	
6	2G	3/21/2016	1600	BS	4X4	IB	SC	
7	2I	3/21/2016	1605	BS	4X4	IB	SC	
8	2H	3/21/2016	1614	BS	4X4	IB	SC	
9	2J	3/21/2016	1627	BS/P	3X8	IB	SC	
10								
11								
12								
13								
14								
15								
16								
17								
18								
19								
20								
21								
22								
23								
24								
25								

REPAIR TYPE: P - PATCH, C - CAP, RS - RECONSTRUCTED SEAM, G&W - GRIND WELD

REVIEWED BY: _KMG_____ DATE _3/22/2016_____

GCS FORM: G19
(JUNE 1992)

GOLDER ASSOCIATES

GEOMEMBRANE REPAIR LOG

PROJECT NUMBER: 130 2962CQA
PROJECT TITLE: OU3 RA Construction
OWNER: Solutia
LOCATION: Anniston AL
CONTRACTOR: Taylor

PASSING TRIAL SEAMS

NO.	TIME	TECH. ID
TX01	1020	RC
TX02	1300	RC

MACHINE NUMBER 51

DATE 3/22/2016

SHEET NO. 1/1

	DEFECT CODE	REPAIR DATE	APPROX. TIME	REPAIR TYPE	APPROX. DIMENSION	WELD TECH.	MON.	REMARKS
1	3W	3/22/2016	1040	BS	3X4	RC	SC	
2	1B	3/22/2016	1053	BS	4X4	RC	SC	
3	1A	3/22/2016	1103	BS	4X4	RC	SC	
4	3M	3/22/2016	1105	G&W	2	RC	SC	
5	1H	3/22/2016	1410	BS	4X4	RC	SC	
6	3Q	3/22/2016	1130	BS	121 LF	RC	SC	
7	3X	3/22/2016	1500	EXT	105 LF	RC	SC	
8								
9								
10								
11								
12								
13								
14								
15								
16								
17								
18								
19								
20								
21								
22								
23								
24								
25								

REPAIR TYPE: P - PATCH, C - CAP, RS - RECONSTRUCTED SEAM, G&W - GRIND WELD

REVIEWED BY: KMG DATE 3/23/2016

GCS FORM: G19
(JUNE 1992)

GOLDER ASSOCIATES

GEOMEMBRANE REPAIR LOG

PROJECT NUMBER: 130 2962CQA
PROJECT TITLE: OU3 RA Construction
OWNER: Solutia
LOCATION: Anniston AL
CONTRACTOR: Taylor

PASSING TRIAL SEAMS

NO.	TIME	TECH. ID
TX01	805	MN

MACHINE NUMBER 51

DATE 3/30/2016

SHEET NO. 1/1

	DEFECT CODE	REPAIR DATE	APPROX. TIME	REPAIR TYPE	APPROX. DIMENSION	WELD TECH.	MON.	REMARKS
1	4A	3/30/2016	900	BS	2X2	MN	SC	
2	4B	3/30/2016	1045	BS	11X11	MN	SC	
3								
4								
5								
6								
7								
8								
9								
10								
11								
12								
13								
14								
15								
16								
17								
18								
19								
20								
21								
22								
23								
24								
25								

REPAIR TYPE: P - PATCH, C - CAP, RS - RECONSTRUCTED SEAM, G&W - GRIND WELD

REVIEWED BY: KMG DATE 3/31/2016

GCS FORM: G19
(JUNE 1992)

GOLDER ASSOCIATES

APPENDIX J2

Area E

GEOMEMBRANE DEFECT LOG

PROJECT NUMBER: 130 2962CQA
PROJECT TITLE: OU3 RA Construction
OWNER: Solutia
AREA E
LOCATION: Anniston AL
CONTRACTOR: Taylor

SHEET NUMBER 1

DEFECT CODE	DEFECT LOCATION		DEFECT TYPE	LOG DATE	MON.	REMARKS	** REPAIR DATE	** TEST DATE
	SEAM, PANEL OR REPAIR NO.	DEFECT LOCATION DESCRIPTION						
A	E1/E2	3'E of WEOS	BO	3/23/2016	SC	Cap to WEOS	3/26/2016	3/28/2016
B	E1/E2	82'E of WEOS	BS	3/23/2016	SC	Vault	3/24/2016	3/26/2016
C	E2/E3	4'E of WEOS	BS	3/23/2016	SC		3/26/2016	3/28/2016
D	E2/E3	8'E of WEOS	DS	3/23/2016	SC	DSF1	3/23/2016	3/26/2016
E	E3/E4	Intersect with E5	T	3/23/2016	SC		3/24/2016	3/26/2016
F	E4/E5	Intersect with E6	T	3/23/2016	SC		3/23/2016	3/26/2016
G	E4/E5	10'N of SEOS	BS	3/23/2016	SC		3/24/2016	3/26/2016
H	E3/E4	7'W of EEOS 4'N	BS	3/23/2016	SC		3/24/2016	3/26/2016
I	E6/E7	Intersect with E8	T	3/23/2016	SC	Covered by 1J	-	-
J	E7/E8	2'S of NEOS	BS/CAP	3/23/2016	SC	Cap to NEOS 2'	3/24/2016	3/26/2016
K	E6/E7	10'W of EEOS 5'S	SI	3/23/2016	SC		3/24/2016	3/26/2016
M	E6/E7	24'W of EEOS	DS	3/23/2016	SC	DSF2	3/23/2016	3/26/2016
N	E11/E12	4'W of EEOS 8'N	BS	3/23/2016	SC		3/24/2016	3/26/2016
P	E11/E12	5'W of EEOS 11'S	BS	3/23/2016	SC		3/26/2016	3/28/2016
Q	E11/E12	28'W of EEOS 1'N	BS	3/23/2016	SC	Vault	3/24/2016	3/26/2016
R	E13/E14	Intersect with E15	T	3/23/2016	SC		3/23/2016	3/26/2016
S	E13/E15	EEOS	DS	3/23/2016	SC	DSF3	3/23/2016	3/26/2016
T	E10/E11	WEEOS	PT	3/26/2016	SC		3/26/2016	3/28/2016
W	E9/E10	WEEOS	PT	3/26/2016	SC		3/26/2016	3/28/2016
X	E7/E9	WEEOS	PT	3/26/2016	SC		3/26/2016	3/28/2016

AD - ANIMAL RELATED DAMAGE
B - UNDISPERSED RESIN BEAD
BO - FUSION WELDER BURN
BS - BOOT/SKIRT FOR FML PENETRATION
CO - CHANGE OF OVERLAP
CR - CREASE
D - INSTALLATION DAMAGE
DS-# - DESTRUCTIVE TEST NUMBER
EE - EARTHWORK EQUIPMENT DAMAGE
EXT - EXTENSION
FM - FISHMOUTH
FS - FAILED SEAM LENGTH
FTS - FIELD TEST STRIP
HT - HEAT TACK BURN
IO - INSUFFICIENT OVERLAY (UNDER SPEC.)
MD - MANUFACTURER/DELIVERY DAMAGE
PT - PRESSURE TEST CUT
SI - SOIL SURFACE IRREGULARITY
SL - SLAG ON TEXTURED SHEET
T - THREE PANEL INTERSECTION
VL - VACUUM TEST LEAK
WR - WRINKLE
WS - WELDER RESTART
OTHER _____

** COLUMNS TO BE USED BY THE DATA REVIEWER ONLY.

REVIEWED BY: KMG DATE: 3/29/2016

GCS FORM: G18
(JUNE 1992)

GEOMEMBRANE DEFECT LOG

PROJECT NUMBER: 130 2962CQA
PROJECT TITLE: OU3 RA Construction
OWNER: Solutia
AREA E
LOCATION: Anniston AL
CONTRACTOR: Taylor

SHEET NUMBER 2

DEFECT CODE	DEFECT LOCATION SEAM, PANEL OR REPAIR NO.	DEFECT LOCATION DESCRIPTION	DEFECT TYPE	LOG DATE	MON.	REMARKS	** REPAIR DATE	** TEST DATE
A	E7/E8	SEOS	PT	3/26/2015	SC		3/26/2016	3/28/2016
B	E6/E8	WEOS	PT	3/26/2015	SC		3/26/2016	3/28/2016
C	E1/E2	22'E of WEOS 3'N	SI	3/26/2015	SC		3/26/2016	3/28/2016
D	E5/E6	WEOS	PT	3/26/2015	SC		3/26/2016	3/28/2016
E	E3/E5	WEOS	PT	3/26/2015	SC		3/26/2016	3/28/2016
F	E1/E2	EEOS	P	3/26/2015	SC		3/26/2016	3/28/2016
G	E1/NTI	2' W of EEOS	BS	3/26/2016	SC	Drainpipe	3/26/2016	3/28/2016
H	E1/NTI	2'E of WEOS	BS	3/26/2016	SC	Drainpipe	3/26/2016	3/28/2016
I	E3/E4	EEOS	BS	3/28/2016	SC	Electric Box	3/28/2016	3/28/2016
J	E5/E6	WEOS 4'S	BS	3/28/2016	SC	Drainpipe	3/28/2016	3/28/2016
K	E7/E8	10'E of SEOS	P	3/28/2016	SC		3/26/2016	3/28/2016
M	E16/WTI	6'N of SEOS	BS	5/5/2016	SC	Drainpipe	5/5/2016	5/5/2016
N	E14/E16	SEOS to NEOS	CAP	5/5/2016	SC	Cap seam	5/5/2016	5/5/2016
P	E12/E15	Intersect with E16	T	5/5/2016	SC		5/5/2016	5/5/2016
Q	E11/E12	Intersect with E16	T	5/5/2016	SC	covered by 2S	-	-
R	E11/E16	WEOS	DS/CAP	5/5/2016	SC	DSF4 CAP seam	5/5/2016	5/5/2016
S	E12/E16	10'S of NEOS	DS/CAP	5/5/2016	SC	Covers 2Q; DSF4P	5/5/2016	5/5/2016
T								
W								
X								

AD - ANIMAL RELATED DAMAGE
B - UNDISPERSED RESIN BEAD
BO - FUSION WELDER BURN
BS - BOOT/SKIRT FOR FML PENETRATION
CO - CHANGE OF OVERLAP
CR - CREASE
D - INSTALLATION DAMAGE
DS-# - DESTRUCTIVE TEST NUMBER
EE - EARTHWORK EQUIPMENT DAMAGE
EXT - EXTENSION
FM - FISHMOUTH
FS - FAILED SEAM LENGTH
FTS - FIELD TEST STRIP
HT - HEAT TACK BURN
IO - INSUFFICIENT OVERLAY (UNDER SPEC.)
MD - MANUFACTURER/DELIVERY DAMAGE
PT - PRESSURE TEST CUT
SI - SOIL SURFACE IRREGULARITY
SL - SLAG ON TEXTURED SHEET
T - THREE PANEL INTERSECTION
VL - VACUUM TEST LEAK
WR - WRINKLE
WS - WELDER RESTART
OTHER _____

** COLUMNS TO BE USED BY THE DATA REVIEWER ONLY.

REVIEWED BY: SC DATE: 5/5/2016

GCS FORM: G18
(JUNE 1992)

GEOMEMBRANE REPAIR LOG

PROJECT NUMBER: 130 2962CQA
PROJECT TITLE: OU3 RA Construction
OWNER: Solutia
AREA E
LOCATION: Anniston AL
CONTRACTOR: Taylor

PASSING TRIAL SEAMS

NO.	TIME	TECH. ID
TX01	1400	BH
TX02	1435	MN

MACHINE NUMBER 51

DATE 3/23/2016

SHEET NO. 1/1

	DEFECT CODE	REPAIR DATE	APPROX. TIME	REPAIR TYPE	APPROX. DIMENSION	WELD TECH.	MON.	REMARKS
1	1F	3/23/2016	1453	P	1X1	MN	SC	
2	1D	3/23/2016	1500	P	2X4	MN	SC	
3	1M	3/23/2016	1509	P	2X4	MN	SC	
4	1R	3/23/2016	1535	P	1X1	MN	SC	
5	1S	3/23/2016	1545	P	2X4	MN	SC	
6								
7								
8								
9								
10								
11								
12								
13								
14								
15								
16								
17								
18								
19								
20								
21								
22								
23								
24								
25								

REPAIR TYPE: P - PATCH, C - CAP, RS - RECONSTRUCTED SEAM, G&W - GRIND WELD

REVIEWED BY: KMG DATE 3/24/2016

GCS FORM: G19
(JUNE 1992)

GOLDER ASSOCIATES

GEOMEMBRANE REPAIR LOG

PROJECT NUMBER: 130 2962CQA
PROJECT TITLE: OU3 RA Construction
OWNER: Solutia
AREA E
LOCATION: Anniston AL
CONTRACTOR: Taylor

PASSING TRIAL SEAMS

NO.	TIME	TECH. ID
TX01	855	RC

MACHINE NUMBER 51

DATE 3/24/2016

SHEET NO. 1/1

	DEFECT CODE	REPAIR DATE	APPROX. TIME	REPAIR TYPE	APPROX. DIMENSION	WELD TECH.	MON.	REMARKS
1	1J	3/24/2016	1055	BS/CAP	3X8	RC	SC	
2	1H	3/24/2016	1115	P	5X5	RC	SC	
3	1E	3/24/2016	1150	P	1X1	RC	SC	
4	1K	3/24/2016	1057	P	1X1	RC	SC	
5								
6								
7								
8								
9								
10								
11								-
12								
13								
14								
15								
16								
17								
18								
19								
20								
21								
22								
23								
24								
25								

REPAIR TYPE: P - PATCH, C - CAP, RS - RECONSTRUCTED SEAM, G&W - GRIND WELD

REVIEWED BY: KMG_____ DATE _3/28/2016_____

GCS FORM: G19

(JUNE 1992)

GOLDER ASSOCIATES

GEOMEMBRANE REPAIR LOG

PROJECT NUMBER: 130 2962CQA
PROJECT TITLE: OU3 RA Construction
OWNER: Solutia
AREA E
LOCATION: Anniston AL
CONTRACTOR: Taylor

PASSING TRIAL SEAMS

NO.	TIME	TECH. ID
TX02	855	MN

DATE 3/24/2016

MACHINE NUMBER 51

SHEET NO. 1/1

	DEFECT CODE	REPAIR DATE	APPROX. TIME	REPAIR TYPE	APPROX. DIMENSION	WELD TECH.	MON.	REMARKS
1	IQ	3/24/2016	1000	P	Vault	MN	SC	BS
2	IN	3/24/2016	1030	P	6X6	MN	SC	BS
3	1G	3/24/2016	1155	P	4X4	MN	SC	BS
4	1B	3/24/2016	1140	P	70	MN	SC	BS
5								
6								
7								
8								
9								
10								
11								
12								
13								
14								
15								
16								
17								
18								
19								
20								
21								
22								
23								
24								
25								

REPAIR TYPE: P - PATCH, C - CAP, RS - RECONSTRUCTED SEAM, G&W - GRIND WELD

REVIEWED BY: KMG_____ DATE 3/28/2016_____

GCS FORM: G19

(JUNE 1992)

GOLDER ASSOCIATES

GEOMEMBRANE REPAIR LOG

PROJECT NUMBER: 130 2962CQA
PROJECT TITLE: OU3 RA Construction
AREA E
OWNER: Solutia
LOCATION: Anniston AL
CONTRACTOR: Taylor

PASSING TRIAL SEAMS

NO.	TIME	TECH. ID
TX01	740	MN

MACHINE NUMBER 51

DATE 3/26/2016

SHEET NO. 1/1

	DEFECT CODE	REPAIR DATE	APPROX. TIME	REPAIR TYPE	APPROX. DIMENSION	WELD TECH.	MON.	REMARKS
1	1T	3/26/2016	840	P	1X2	MN	SC	
2	1W	3/26/2016	900	P	1X1	MN	SC	
3	1X	3/26/2016	905	P	1X1	MN	SC	
4	2A	3/26/2016	927	P	1X1	MN	SC	
5	2B	3/26/2016	1004	P	1X1	MN	SC	
6	2D	3/26/2016	1016	P	1X1	MN	SC	
7	2E	3/26/2016	1016	P	1X1	MN	SC	
8	1C	3/26/2016	1050	CAP/BS	5X3	MN	SC	
9	1A	3/26/2016	1130	CAP	2X5	MN	SC	
10	2C	3/26/2016	1208	P	1X1	MN	SC	
11	2K	3/26/2016	930 P	P	2X5	MN	SC	
12								
13								
14								
15								
16								
17								
18								
19								
20								
21								
22								
23								
24								
25								

REPAIR TYPE: P - PATCH, C - CAP, RS - RECONSTRUCTED SEAM, G&W - GRIND WELD

REVIEWED BY: _KMG_____ DATE _3/28/2016_____

GCS FORM: G19
(JUNE 1992)

GOLDER ASSOCIATES

GEOMEMBRANE REPAIR LOG

PROJECT NUMBER: 130 2962CQA
PROJECT TITLE: OU3 RA Construction
OWNER: Solutia
AREA E
LOCATION: Anniston AL
CONTRACTOR: Taylor

PASSING TRIAL SEAMS

NO.	TIME	TECH. ID
TX03	750	IB

MACHINE NUMBER 62

DATE 3/26/2016

SHEET NO. 1/1

	DEFECT CODE	REPAIR DATE	APPROX. TIME	REPAIR TYPE	APPROX. DIMENSION	WELD TECH.	MON.	REMARKS
1	1P	3/26/2016	1025	P	4X5	IB	SC	BS
2	2F	3/26/2016	1204	P	2X2	IB	SC	
3								
4								
5								
6								
7								
8								
9								
10								
11								
12								
13								
14								
15								
16								
17								
18								
19								
20								
21								
22								
23								
24								
25								

REPAIR TYPE: P - PATCH, C - CAP, RS - RECONSTRUCTED SEAM, G&W - GRIND WELD

REVIEWED BY: _KMG_____ DATE _3/28/2016_____

GCS FORM: G19

(JUNE 1992)

GOLDER ASSOCIATES

GEOMEMBRANE REPAIR LOG

PROJECT NUMBER: 130 2962CQA
PROJECT TITLE: OU3 RA Construction
AREA E
OWNER: Solutia
LOCATION: Anniston AL
CONTRACTOR: Taylor

PASSING TRIAL SEAMS

NO.	TIME	TECH. ID
TX01	1250	IB

MACHINE NUMBER 62

DATE 3/28/2016

SHEET NO. 1/1

	DEFECT CODE	REPAIR DATE	APPROX. TIME	REPAIR TYPE	APPROX. DIMENSION	WELD TECH.	MON.	REMARKS
1	2I	3/28/2016	1330	P	3X3	IB	SC	BS
2	2J	3/28/2016	1350	P	4X3	IB	SC	BS (drain pipe)
3								
4								
5								
6								
7								
8								
9								
10								
11								
12								
13								
14								
15								
16								
17								
18								
19								
20								
21								
22								
23								
24								
25								

REPAIR TYPE: P - PATCH, C - CAP, RS - RECONSTRUCTED SEAM, G&W - GRIND WELD

REVIEWED BY: _KMG_____ DATE _3/28/2016_____

GCS FORM: G19

(JUNE 1992)

GOLDER ASSOCIATES

GEOMEMBRANE REPAIR LOG

PROJECT NUMBER: 130 2962CQA
PROJECT TITLE: OU3 RA Construction
OWNER: Solutia
AREA E
LOCATION: Anniston AL
CONTRACTOR: Taylor

PASSING TRIAL SEAMS

NO.	TIME	TECH. ID
TX01	910	MN

MACHINE NUMBER 53

DATE 5/5/2016

SHEET NO. 1/1

	DEFECT CODE	REPAIR DATE	APPROX. TIME	REPAIR TYPE	APPROX. DIMENSION	WELD TECH.	MON.	REMARKS
1	2M	5/5/2106	940	P	2x2	MN	SC	BS
2	2R	5/5/2106	1330	CAP	2x20	MN	SC	Cap seam 11/16
3	2S	5/5/2106	1355	CAP	2x10	MN	SC	
4	2N	5/5/2106	1405	CAP	2x4	MN	SC	
5	2P	5/5/2106	1415	P	1x1	MN	SC	
6								
7								
8								
9								
10								
11								
12								
13								
14								
15								
16								
17								
18								
19								
20								
21								
22								
23								
24								
25								

REPAIR TYPE: P - PATCH, C - CAP, RS - RECONSTRUCTED SEAM, G&W - GRIND WELD

REVIEWED BY SC 5/5/2016

GCS FORM: G19
(JUNE 1992)

GOLDER ASSOCIATES

APPENDIX J3

PCB Cells

GEOMEMBRANE DEFECT LOG

PROJECT NUMBER: 130 2962CQA
PROJECT TITLE: OU3 RA Construction
OWNER: Solutia
LOCATION: Anniston AL
CONTRACTOR: Taylor

SHEET NUMBER 1

DEFECT CODE	DEFECT LOCATION SEAM, PANEL OR REPAIR NO.	DEFECT LOCATION DESCRIPTION	DEFECT TYPE	LOG DATE	MON.	REMARKS	** REPAIR DATE	** TEST DATE
A	P24/P4	Intersect with P5	T	10/16/2015	SC		10/22/2015	10/22/2015
B	P2/P3	Intersect with P5	T	10/16/2015	SC	covered by 1E	-	-
C	P1/P2	50'S of NEOS	DS	10/16/2015	SC	DSF1	10/22/2015	10/22/2015
D	P1/P2	6'W of seam on P1	B	10/16/2015	SC	Omit - wrinkle gone from heat of the day	-	-
E	P2/P5	3'S of NEOS	DS	10/16/2015	SC	DSF2	10/22/2015	10/22/2015
F	P1/P6	Intersect with P7	T	10/16/2015	SC		10/22/2015	10/22/2015
G	P6/P7	Intersect with P9	T	10/16/2015	SC		10/22/2015	10/22/2015
H	P7/P8	Intersect with P9	T	10/16/2015	SC		10/22/2015	10/22/2015
I	P1/P6	122'S of NEOS	DS	10/16/2015	SC	DSF3	10/22/2015	10/22/2015
J	P6/P9	177'N of SEOS	DS	10/16/2015	SC	DSF4	10/22/2015	10/22/2015
K	P6/P9	63'N of SEOS	WR	10/16/2015	SC	Omit - wrinkle gone from heat of the day	-	-
M	P9	4'N of SEOP, 8'W	D	10/16/2015	SC	@EEOP	10/22/2015	10/22/2015
N	P9	2'N of SEOP, 1'W	D	10/16/2015	SC	@EEOP	10/22/2015	10/22/2015
P	P8/P9	Intersect with P11	T	10/16/2015	SC		10/22/2015	10/22/2015
Q	P9/P10	Intersect with P11	T	10/16/2015	SC		10/22/2015	10/22/2015
R	P9/P10	177'S of NEOS	DS	10/16/2015	SC	DSF5	10/22/2015	10/22/2015
S	P10	103'N of EEOP, 5'W	WR	10/16/2015	SC	Omit - wrinkle gone from heat of the day	-	-
T	P10	159'N of SEOP, 5'W of EEOP	EE	10/16/2015	SC		10/22/2015	10/22/2015
W	P10/P11	Intersect with P12	T	10/16/2015	SC		10/22/2015	10/22/2015
X	P10/P12	90'N of SEOS	DS	10/16/2015	SC	DSF6	10/22/2015	10/22/2015

AD - ANIMAL RELATED DAMAGE
B - UNDISPERSED RESIN BEAD
BO - FUSION WELDER BURN
BS - BOOT/SKIRT FOR FML PENETRATION
CO - CHANGE OF OVERLAP
CR - CREASE
D - INSTALLATION DAMAGE
DS-# - DESTRUCTIVE TEST NUMBER
EE - EARTHWORK EQUIPMENT DAMAGE
EXT - EXTENSION
FM - FISHMOUTH
FS - FAILED SEAM LENGTH
FTS - FIELD TEST STRIP
HT - HEAT TACK BURN
IO - INSUFFICIENT OVERLAY (UNDER SPEC.)
MD - MANUFACTURER/DELIVERY DAMAGE
PT - PRESSURE TEST CUT
SI - SOIL SURFACE IRREGULARITY
SL - SLAG ON TEXTURED SHEET
T - THREE PANEL INTERSECTION
VL - VACUUM TEST LEAK
WR - WRINKLE
WS - WELDER RESTART
OTHER _____

** COLUMNS TO BE USED BY THE DATA REVIEWER ONLY.

REVIEWED BY: KMG DATE: 10/23/2015

GCS FORM: G18
(JUNE 1992)

GEOMEMBRANE DEFECT LOG

PROJECT NUMBER: 130 2962CQA
PROJECT TITLE: OU3 RA Construction
OWNER: Solutia
LOCATION: Anniston AL
CONTRACTOR: Taylor

SHEET NUMBER 2

DEFECT CODE	DEFECT LOCATION		DEFECT TYPE	LOG DATE	MON.	REMARKS	** REPAIR DATE	** TEST DATE
	SEAM, PANEL OR REPAIR NO.	DEFECT LOCATION DESCRIPTION						
A	P11	3'S of NEOP, 10'E of WEOP	D	10/16/2015	SC		10/22/2015	10/22/2015
B	P12/P13	Intersect with P14	T	10/17/2015	SC		10/22/2015	10/22/2015
C	P13/P14	Intersect with P16	T	10/17/2015	SC		10/22/2015	10/22/2015
D	P14/P15	Intersect with P16	T	10/17/2015	SC		10/22/2015	10/22/2015
E	P12/P14	131'N of SEOS	DS	10/17/2015	SC	DSF7	10/22/2015	10/22/2015
F	P14/P15	70'S of NEOS	DS	10/17/2015	SC	DSF8	10/22/2015	10/22/2015
G	P17/P18	Intersect with P19	T	10/17/2015	SC		10/22/2015	10/22/2015
H	P15/P16	Intersect with P17	T	10/17/2015	SC		10/22/2015	10/22/2015
I	P19	5'N of SEOP, 3'W of EEOP	D	10/17/2015	SC		10/22/2015	10/22/2015
J	P19	10'N of SEOP, 3'W of EEOP	D	10/17/2015	SC		10/22/2015	10/22/2015
K	P15/P16	2'N of SEOP, 9'E of WEOP	D	10/17/2015	SC		10/22/2015	10/22/2015
M	P15/P17	70'N of SEOS	DS	10/17/2015	SC	DSF9	10/22/2015	10/22/2015
N	P17/P19	60'N of SEOS	DS	10/17/2015	SC	DSF10	10/22/2015	10/22/2015
P	P19	27'N of SEOP, 15'W	EE	10/17/2015	SC	OMIT	-	-
Q	P19	80'N of SEOP, 5'W	EE	10/17/2015	SC		10/22/2015	10/22/2015
R	P19	43'N of SEOP, 10'W	EE	10/17/2015	SC		10/22/2015	10/22/2015
S	P19/P20	Intersect with P21	T	10/17/2015	SC		10/22/2015	10/22/2015
T	P20/P21	Intersect with P22	T	10/17/2015	SC		10/22/2015	10/22/2015
W	P21/P22	17'S of NEOS	DS	10/17/2015	SC	DSF11	10/22/2015	10/22/2015
X	P19	60'S of NEOP, 6'E	D	10/17/2015	SC		10/22/2015	10/22/2015

AD - ANIMAL RELATED DAMAGE
B - UNDISPERSED RESIN BEAD
BO - FUSION WELDER BURN
BS - BOOT/SKIRT FOR FML PENETRATION
CO - CHANGE OF OVERLAP
CR - CREASE
D - INSTALLATION DAMAGE
DS-# - DESTRUCTIVE TEST NUMBER
EE - EARTHWORK EQUIPMENT DAMAGE
EXT - EXTENSION
FM - FISHMOUTH
FS - FAILED SEAM LENGTH
FTS - FIELD TEST STRIP
HT - HEAT TACK BURN
IO - INSUFFICIENT OVERLAY (UNDER SPEC.)
MD - MANUFACTURER/DELIVERY DAMAGE
PT - PRESSURE TEST CUT
SI - SOIL SURFACE IRREGULARITY
SL - SLAG ON TEXTURED SHEET
T - THREE PANEL INTERSECTION
VL - VACUUM TEST LEAK
WR - WRINKLE
WS - WELDER RESTART
OTHER _____

** COLUMNS TO BE USED BY THE DATA REVIEWER ONLY.

REVIEWED BY: KMG DATE: 10/23/2015

GCS FORM: G18
(JUNE 1992)

GEOMEMBRANE DEFECT LOG

PROJECT NUMBER: 130 2962CQA
PROJECT TITLE: OU3 RA Construction
OWNER: Solutia
LOCATION: Anniston AL
CONTRACTOR: Taylor

SHEET NUMBER 3

DEFECT CODE	DEFECT LOCATION		DEFECT TYPE	LOG DATE	MON.	REMARKS	** REPAIR DATE	** TEST DATE
	SEAM, PANEL OR REPAIR NO.	DEFECT LOCATION DESCRIPTION						
A	P18/P19	Intersect with P21	T	10/17/2015	SC		10/22/2015	10/22/2015
B	P18/P21	31'S of NEOS	DS	10/17/2015	SC	DSF12	10/22/2015	10/22/2015
C	P22/P23	Intersect with P24	T	10/17/2015	SC		10/22/2015	10/22/2015
D	P23/P24	Intersect with P25	T	10/17/2015	SC		10/22/2015	10/22/2015
E	P23/P24	Intersect with P26	T	10/17/2015	SC		10/22/2015	10/22/2015
F	P23/P26	5'S of NEOS	DS	10/17/2015	SC	DSF13	10/22/2015	10/22/2015
G	P24/P25	140'S of NEOS	PT	10/18/2015	SC		10/22/2015	10/22/2015
H	P27/P28	Intersect with P29	T	10/18/2015	SC		10/22/2015	10/22/2015
I	P27/P29	199'S of NEOS	DS	10/18/2015	SC	DSF14	10/22/2015	10/22/2015
J	P25/P26	Intersect with P27	T	10/18/2015	SC		10/22/2015	10/22/2015
K	P26/P27	4'S of NEOS	DS	10/18/2015	SC	DSF15	10/22/2015	10/22/2015
M	P28/P29	Intersect with P30	T	10/18/2015	SC		10/22/2015	10/22/2015
N	P26	2'S of NEOP, 4'E	D	10/18/2015	SC		10/22/2015	10/22/2015
P	P28/P30	81'N of SEOS	DS	10/18/2015	SC	DSF16	10/22/2015	10/22/2015
Q	P31/P33	30'N of SEOS	DS	10/19/2015	SC	DSF17	10/22/2015	10/22/2015
R	P31/P32	Intersect with P33	T	10/19/2015	SC		10/22/2015	10/22/2015
S	P32/P34	46'S of NEOS	DS	10/19/2015	SC	DSF18	10/22/2015	10/22/2015
T	P32/P33	Intersect with P34	T	10/19/2015	SC		10/22/2015	10/22/2015
W	P34/P35	Intersect with P36	T	10/19/2015	SC		10/22/2015	10/22/2015
X	P35/P36	Intersect with P37	T	10/19/2015	SC		10/22/2015	10/22/2015

AD - ANIMAL RELATED DAMAGE
B - UNDISPERSED RESIN BEAD
BO - FUSION WELDER BURN
BS - BOOT/SKIRT FOR FML PENETRATION
CO - CHANGE OF OVERLAP
CR - CREASE
D - INSTALLATION DAMAGE
DS-# - DESTRUCTIVE TEST NUMBER
EE - EARTHWORK EQUIPMENT DAMAGE
EXT - EXTENSION
FM - FISHMOUTH
FS - FAILED SEAM LENGTH
FTS - FIELD TEST STRIP
HT - HEAT TACK BURN
IO - INSUFFICIENT OVERLAY (UNDER SPEC.)
MD - MANUFACTURER/DELIVERY DAMAGE
PT - PRESSURE TEST CUT
SI - SOIL SURFACE IRREGULARITY
SL - SLAG ON TEXTURED SHEET
T - THREE PANEL INTERSECTION
VL - VACUUM TEST LEAK
WR - WRINKLE
WS - WELDER RESTART
OTHER _____

** COLUMNS TO BE USED BY THE DATA REVIEWER ONLY.

REVIEWED BY: KMG DATE: 10/23/2015

GCS FORM: G18
(JUNE 1992)

GEOMEMBRANE DEFECT LOG

PROJECT NUMBER: 130 2962CQA
PROJECT TITLE: OU3 RA Construction
OWNER: Solutia
LOCATION: Anniston AL
CONTRACTOR: Taylor

SHEET NUMBER 4

DEFECT CODE	DEFECT LOCATION		DEFECT TYPE	LOG DATE	MON.	REMARKS	** REPAIR DATE	** TEST DATE
	SEAM, PANEL OR REPAIR NO.	DEFECT LOCATION DESCRIPTION						
A	P34/P36	22' S of NEOS	DS	10/19/2015	SC	DSF19	10/22/2015	10/22/2015
B	P36/P37	124'N of SEOS	DS	10/19/2015	SC	DSF20	10/22/2015	10/22/2015
C	P37/P38	Intersect with P39	T	10/19/2015	SC		10/22/2015	10/22/2015
D	P36	127'N of EEOP 2'N	EE	10/19/2015	SC		10/22/2015	10/22/2015
E	P38/P39	Intersect with P40	T	10/19/2015	SC		10/22/2015	10/22/2015
F	P39/P40	145'N of SEOS	DS	10/19/2015	SC	DSF21	10/22/2015	10/22/2015
G	P38/P40	Intersect with P41	T	10/19/2015	SC		10/22/2015	10/22/2015
H	P29	4'N ofSEOP 10'E	D	10/19/2015	SC		10/22/2015	10/22/2015
I	P29	10'N of SEOP 10'E	D	10/19/2015	SC		10/22/2015	10/22/2015
J	P40/P41	Intersect with P42	T	10/19/2015	SC		10/22/2015	10/22/2015
K	P41/P42	5'S of NEOS	DS	10/19/2015	SC	DSF22	10/22/2015	10/22/2015
M	P44	5'S of NEOP 8'E	D	10/19/2015	SC		10/22/2015	10/22/2015
N	P42/P43	31'N of SEOS	DS	10/19/2015	SC	DSF23	10/22/2015	10/22/2015
P	P42/P43	139'S of NEOS	PT	10/20/2015	SC		10/22/2015	10/22/2015
Q	P42/P43	SEOS	PT/CAP	10/20/2015	SC		10/22/2015	10/22/2015
R	P45/P46	Intersect with P47	T	10/20/2015	SC		10/22/2015	10/22/2015
S	P45/P46	112'S of NEOS	DS	10/20/2015	SC	DSF24	10/22/2015	10/22/2015
T	P43/P44	Intersect with P45	T	10/20/2015	SC		10/22/2015	10/22/2015
W	P46	10' N of SEOP 2'W	EE	10/20/2015	SC		10/22/2015	10/22/2015
X	P46/P47	Intersect with P48	T	10/20/2015	SC		10/22/2015	10/22/2015

AD - ANIMAL RELATED DAMAGE
B - UNDISPERSED RESIN BEAD
BO - FUSION WELDER BURN
BS - BOOT/SKIRT FOR FML PENETRATION
CO - CHANGE OF OVERLAP
CR - CREASE
D - INSTALLATION DAMAGE
DS-# - DESTRUCTIVE TEST NUMBER
EE - EARTHWORK EQUIPMENT DAMAGE
EXT - EXTENSION
FM - FISHMOUTH
FS - FAILED SEAM LENGTH
FTS - FIELD TEST STRIP
HT - HEAT TACK BURN
IO - INSUFFICIENT OVERLAY (UNDER SPEC.)
MD - MANUFACTURER/DELIVERY DAMAGE
PT - PRESSURE TEST CUT
SI - SOIL SURFACE IRREGULARITY
SL - SLAG ON TEXTURED SHEET
T - THREE PANEL INTERSECTION
VL - VACUUM TEST LEAK
WR - WRINKLE
WS - WELDER RESTART
OTHER _____

** COLUMNS TO BE USED BY THE DATA REVIEWER ONLY.

REVIEWED BY: KMG DATE: 10/23/2015

GCS FORM: G18
(JUNE 1992)

GEOMEMBRANE DEFECT LOG

PROJECT NUMBER: 130 2962CQA
PROJECT TITLE: OU3 RA Construction
OWNER: Solutia
LOCATION: Anniston AL
CONTRACTOR: Taylor

SHEET NUMBER 5

DEFECT CODE	DEFECT LOCATION		DEFECT TYPE	LOG DATE	MON.	REMARKS	** REPAIR DATE	** TEST DATE
	SEAM, PANEL OR REPAIR NO.	DEFECT LOCATION DESCRIPTION						
A	P48/P49	Intersect with P50	T	10/20/2015	SC		10/22/2015	10/22/2015
B	P47/P48	37' S of NEOS	DS	10/20/2015	SC	DSF25	10/22/2015	10/22/2015
C	P48/P50	68' N of SEOS	DS	10/20/2015	SC	DSF26	10/22/2015	10/22/2015
D	P49/P50	Intersect with P51	T	10/20/2015	SC		10/22/2015	10/22/2015
E	P51/P52	Intersect with P53	T	10/20/2015	SC		10/22/2015	10/22/2015
F	P51/P53	5' S of NEOS	DS	10/20/2015	SC	DSF27	10/22/2015	10/22/2015
G	P50/P51	110' S of NEOS	DS	10/20/2015	SC	DSF28	10/22/2015	10/22/2015
H	P52/P53	Intersect with P54	T	10/20/2015	SC	Covered by 5J	--	--
I	P54/P55	Intersect with P56	T	10/20/2015	SC		10/22/2015	10/22/2015
J	P52/P53	Intersect with P54	T	10/20/2015	SC	Covers 5H	10/22/2015	10/22/2015
K	P57/P58	Intersect with P59	T	10/21/2015	SC		10/22/2015	10/22/2015
M	P55	15'N of SEOP 10'E	EE	10/21/2015	SC		10/22/2015	10/22/2015
N	P55	4' N of SEOP 12'E	EE	10/21/2015	SC		10/22/2015	10/22/2015
P	P56/P57	51'N of SEOS	DS	10/21/2015	SC	DSF29	10/22/2015	10/22/2015
Q	P57/P58	136'S of NEOS	DS	10/21/2015	SC	DSF30	10/22/2015	10/22/2015
R	P58	41'S of SEOP 8'W	EE	10/21/2015	SC		10/22/2015	10/22/2015
S	P58/P59	Intersect with P60	T	10/21/2015	SC		10/22/2015	10/22/2015
T	P55/P56	Intersect with P57	T	10/21/2015	SC		10/22/2015	10/22/2015
W	P42/P43	Intersect with P43	T	10/21/2015	SC		10/22/2015	10/22/2015
X	P62/P63	Intersect with P64	T	10/21/2015	SC	Cap P63/P64	10/22/2015	10/22/2015

AD - ANIMAL RELATED DAMAGE
B - UNDISPERSED RESIN BEAD
BO - FUSION WELDER BURN
BS - BOOT/SKIRT FOR FML PENETRATION
CO - CHANGE OF OVERLAP
CR - CREASE
D - INSTALLATION DAMAGE
DS-# - DESTRUCTIVE TEST NUMBER
EE - EARTHWORK EQUIPMENT DAMAGE
EXT - EXTENSION
FM - FISHMOUTH
FS - FAILED SEAM LENGTH
FTS - FIELD TEST STRIP
HT - HEAT TACK BURN
IO - INSUFFICIENT OVERLAY (UNDER SPEC.)
MD - MANUFACTURER/DELIVERY DAMAGE
PT - PRESSURE TEST CUT
SI - SOIL SURFACE IRREGULARITY
SL - SLAG ON TEXTURED SHEET
T - THREE PANEL INTERSECTION
VL - VACUUM TEST LEAK
WR - WRINKLE
WS - WELDER RESTART
OTHER _____

** COLUMNS TO BE USED BY THE DATA REVIEWER ONLY.

REVIEWED BY: KMG DATE: 10/23/2015

GCS FORM: G18
(JUNE 1992)

GEOMEMBRANE DEFECT LOG

PROJECT NUMBER: 130 2962CQA
PROJECT TITLE: OU3 RA Construction
OWNER: Solutia
LOCATION: Anniston AL
CONTRACTOR: Taylor

SHEET NUMBER 6

DEFECT CODE	DEFECT LOCATION		DEFECT TYPE	LOG DATE	MON.	REMARKS	** REPAIR DATE	** TEST DATE
	SEAM, PANEL OR REPAIR NO.	DEFECT LOCATION DESCRIPTION						
A	P62/P64	NEOS	DS	10/21/2015	SC	DSF31	10/22/2015	10/22/2015
B	P61/P62	29'N of SEOS	DS	10/21/2015	SC	DSF32	10/22/2015	10/22/2015
C	P61/P62	NEOS	DS	10/21/2015	SC	DSF33	10/22/2015	10/22/2015
D	P1/P7	NEOS	P	10/22/2015	SC		10/22/2015	10/22/2015
E	P1/P2	NEOS	P	10/22/2015	SC		10/22/2015	10/22/2015
F	P7	20'S of NEOP 10'W	B	10/22/2015	SC		10/22/2015	10/22/2015
G	P49	84'N of SEOP 4'W	WR	10/22/2015	SC		10/22/2015	10/22/2015
H	P43/P45	30'S of NEOS 1'W	EE	10/22/2015	SC	on panel 45	10/22/2015	10/22/2015
I								
J								
K								
M								
N								
P								
Q								
R								
S								
T								
W								
X								

AD - ANIMAL RELATED DAMAGE
B - UNDISPERSED RESIN BEAD
BO - FUSION WELDER BURN
BS - BOOT/SKIRT FOR FML PENETRATION
CO - CHANGE OF OVERLAP
CR - CREASE
D - INSTALLATION DAMAGE
DS-# - DESTRUCTIVE TEST NUMBER
EE - EARTHWORK EQUIPMENT DAMAGE
EXT - EXTENSION
FM - FISHMOUTH
FS - FAILED SEAM LENGTH
FTS - FIELD TEST STRIP
HT - HEAT TACK BURN
IO - INSUFFICIENT OVERLAY (UNDER SPEC.)
MD - MANUFACTURER/DELIVERY DAMAGE
PT - PRESSURE TEST CUT
SI - SOIL SURFACE IRREGULARITY
SL - SLAG ON TEXTURED SHEET
T - THREE PANEL INTERSECTION
VL - VACUUM TEST LEAK
WR - WRINKLE
WS - WELDER RESTART
OTHER _____

** COLUMNS TO BE USED BY THE DATA REVIEWER ONLY.

REVIEWED BY: KMG DATE: 10/23/2015

GCS FORM: G18
(JUNE 1992)

GEOMEMBRANE REPAIR LOG

PROJECT NUMBER: 130 2962CQA PROJECT TITLE: OU3 RA Construction
OWNER: Solutia
LOCATION: Anniston AL CONTRACTOR: Taylor

PASSING TRIAL SEAMS

NO.	TIME	TECH. ID
TX02	752	IB
TX03	1300	RC

MACHINE NUMBER 39

DATE 10/22/2015

SHEET NO. 1/2

	DEFECT CODE	REPAIR DATE	APPROX. TIME	REPAIR TYPE	APPROX. DIMENSION	WELD TECH.	MON.	REMARKS
1	3P	10/22/2015	1037	P	2X4	RC	SC	
2	3D	10/22/2015	1040	P	1X1	RC	SC	
3	3C	10/22/2015	1042	P	1X1	RC	SC	
4	2T	10/22/2015	1044	P	1X1	RC	SC	
5	2S	10/22/2015	1046	P	1X1	RC	SC	
6	2X	10/22/2015	1047	BEAD	1	RC	SC	
7	2G	10/22/2015	1049	P	1X1	RC	SC	
8	3A	10/22/2015	1051	P	1X1	RC	SC	
9	3B	10/22/2015	1057	P	2X4	RC	SC	
10	2W	10/22/2015	1059	P	2X4	RC	SC	
11	3F	10/22/2015	1104	P	2X4	RC	SC	
12	3N	10/22/2015	1113	P	1X1	RC	SC	
13	3K	10/22/2015	1115	P	2X4	RC	SC	
14	3E	10/22/2015	1121	P	1X1	RC	SC	
15	3J	10/22/2015	1123	P	1X1	RC	SC	
16	3Q	10/22/2015	1126	P	2X4	RC	SC	
17	3R	10/22/2015	1130	P	1X1	RC	SC	
18	3T	10/22/2015	1134	P	1X1	RC	SC	
19	3S	10/22/2015	1137	P	2X4	RC	SC	
20	4A	10/22/2015	1141	P	2X4	RC	SC	
21	3W	10/22/2015	1143	P	1X1	RC	SC	
22	3X	10/22/2015	1146	P	1X1	RC	SC	
23	4F	10/22/2015	1313	P	2X4	RC	SC	
24	4B	10/22/2015	1316	P	2X4	RC	SC	
25	4D	10/22/2015	1320	BEAD	1	RC	SC	

REPAIR TYPE: P - PATCH, C - CAP, RS - RECONSTRUCTED SEAM, G&W - GRIND WELD

REVIEWED BY: KMG_____ DATE 10/23/2015_____

GCS FORM: G19
(JUNE 1992)

GOLDER ASSOCIATES

GEOMEMBRANE REPAIR LOG

PROJECT NUMBER: 130 2962CQA
PROJECT TITLE: OU3 RA Construction
OWNER: Solutia
LOCATION: Anniston AL
CONTRACTOR: Taylor

PASSING TRIAL SEAMS

NO.	TIME	TECH. ID
TX02	752	IB
TX03	1300	RC

DATE 10/22/2015

MACHINE NUMBER 39

SHEET NO. 2/2

	DEFECT CODE	REPAIR DATE	APPROX. TIME	REPAIR TYPE	APPROX. DIMENSION	WELD TECH.	MON.	REMARKS
1	4N	10/22/2015	1324	P	2X4	RC	SC	
2	4Q	10/22/2015	1332	CAP	2X4	RC	SC	
3	6G	10/22/2015	1336	P	2X4	RC	SC	
4	5B	10/22/2015	1340	P	2X4	RC	SC	
5	4X	10/22/2015	1344	P	1X1	RC	SC	
6	4R	10/22/2015	1350	P	1X1	RC	SC	
7	4P	10/22/2015	1352	P	1X1	RC	SC	
8	5A	10/22/2015	1354	P	1X1	RC	SC	
9	5D	10/22/2015	1358	P	1X1	RC	SC	
10	5C	10/22/2015	1403	P	2X4	RC	SC	
11	6A	10/22/2015	1409	P	1X1	RC	SC	
12	4W	10/22/2015	1411	BEAD	1	RC	SC	
13	4T	10/22/2015	1415	P	1X1	RC	SC	
14	4S	10/22/2015	1407	P	2X4	RC	SC	
15	5W	10/22/2015	1418	P	1X1	RC	SC	
16	4E	10/22/2015	1422	P	1X1	RC	SC	
17	4C	10/22/2015	1424	P	1X1	RC	SC	
18	4G	10/22/2015	1426	P	1X1	RC	SC	
19	4J	10/22/2015	1428	P	1X1	RC	SC	
20	4K	10/22/2015	1432	P	2X4	RC	SC	
21	4M	10/22/2015	1438	P	1X1	RC	SC	
22	5F	10/22/2015	1445	P	2X4	RC	SC	
23								
24								
25								

REPAIR TYPE: P - PATCH, C - CAP, RS - RECONSTRUCTED SEAM, G&W - GRIND WELD

REVIEWED BY: KMG_____ DATE _10/23/2015_____

GCS FORM: G19
(JUNE 1992)

GOLDER ASSOCIATES

GEOMEMBRANE REPAIR LOG

PROJECT NUMBER: 130 2962CQA
PROJECT TITLE: OU3 RA Construction
OWNER: Solutia
LOCATION: Anniston AL
CONTRACTOR: Taylor

PASSING TRIAL SEAMS

NO.	TIME	TECH. ID
TX01	0745	IB
TX04	1305	IB

DATE 10/22/2015

MACHINE NUMBER 39

SHEET NO. 1/3

	DEFECT CODE	REPAIR DATE	APPROX. TIME	REPAIR TYPE	APPROX. DIMENSION	WELD TECH.	MON.	REMARKS
1	2A	10/22/2015	0755	P	1X1	IB	SC	
2	6D	10/22/2015	0758	P	1X1	IB	SC	
3	6F	10/22/2015	0802	P	1X1	IB	SC	
4	1C	10/22/2015	805	P	2X4	IB	SC	
5	1F	10/22/2015	0810	P	1X1	IB	SC	
6	1G	10/22/2015	0812	P	1X1	IB	SC	
7	1H	10/22/2015	0815	P	1X1	IB	SC	
8	6F	10/22/2015	0817	BEAD	1	IB	SC	
9	1P	10/22/2015	0839	P	1X1	IB	SC	
10	1Q	10/22/2015	840	P	1X1	IB	SC	
11	1W	10/22/2015	0843	P	1X1	IB	SC	
12	2B	10/22/2015	0845	P	1X1	IB	SC	
13	2C	10/22/2015	0848	P	1X1	IB	SC	
14	1E	10/22/2015	0853	P	2X6	IB	SC	
15	1A	10/22/2015	0858	P	1X1	IB	SC	
16	1I	10/22/2015	0903	P	2X4	IB	SC	
17	1R	10/22/2015	0909	P	2X4	IB	SC	
18	1J	10/22/2015	0913	P	2X4	IB	SC	
19	1T	10/22/2015	0912	BEAD	1	IB	SC	
20	1X	10/22/2015	0915	P	2X4	IB	SC	
21	1S	10/22/2015	-	-	-	-	-	Omit - wrinkle gone from heat of the day
22	2E	10/22/2015	0926	P	2X4	IB	SC	
23	2F	10/22/2015	0934	P	2X4	IB	SC	
24	1K	10/22/2015	-	-	-	-	-	Omit - wrinkle gone from heat of the day
25	2M	10/22/2015	0940	P	2X4	IB	SC	

REPAIR TYPE: P - PATCH, C - CAP, RS - RECONSTRUCTED SEAM, G&W - GRIND WELD

REVIEWED BY: KMG_____ DATE _10/23/2015_____

GCS FORM: G19
(JUNE 1992)

GOLDER ASSOCIATES

GEOMEMBRANE REPAIR LOG

PROJECT NUMBER: 130 2962CQA PROJECT TITLE: OU3 RA Construction
OWNER: Solutia
LOCATION: Anniston AL CONTRACTOR: Taylor

PASSING TRIAL SEAMS

NO.	TIME	TECH. ID
TX01	0745	IB
TX04	1305	IB

DATE 10/22/2015

MACHINE NUMBER 39

SHEET NO. 2/3

	DEFECT CODE	REPAIR DATE	APPROX. TIME	REPAIR TYPE	APPROX. DIMENSION	WELD TECH.	MON.	REMARKS
1	2J	10/22/2015	0947	BEAD	2	IB	SC	
2	2I	10/22/2015	0948	P	1X2	IB	SC	
3	2K	10/22/2015	0949	P	1X1	IB	SC	
4	1M	10/22/2015	0954	P	1X1	IB	SC	
5	1N	10/22/2015	0956	BEAD	1	IB	SC	
6	1D	-	-	-	-	-	-	Omit - wrinkle gone from heat of the day
7	4H	10/22/2015	1004	P	1X1	IB	SC	
8	4I	10/22/2015	1006	P	1X1	IB	SC	
9	3I	10/22/2015	1009	P	2X4	IB	SC	
10	3G	10/22/2015	1018	P	1X1	IB	SC	
11	2D	10/22/2015	0929	P	1X1	IB	SC	
12	2H	10/22/2015	0930	P	1X1	IB	SC	
13	3M	10/22/2015	1026	P	1X1	IB	SC	
14	3H	10/22/2015	1028	P	1X1	IB	SC	
15	2N	10/22/2015	0945	P	2X4	IB	SC	
16	2R	10/22/2015	0946	BEAD	1	IB	SC	
17	2Q	10/22/2015	0948	BEAD	1	IB	SC	
18	5G	10/22/2015	1450	P	2X4	IB	SC	
19	5M	10/22/2015	1455	P	1X1	IB	SC	
20	5I	10/22/2015	1456	P	1X1	IB	SC	
21	5T	10/22/2015	1458	P	1X2	IB	SC	
22	5Q	10/22/2015	1502	P	2X4	IB	SC	
23	5E	10/22/2015	1507	P	1X1	IB	SC	
24								
25								

REPAIR TYPE: P - PATCH, C - CAP, RS - RECONSTRUCTED SEAM, G&W - GRIND WELD

REVIEWED BY: KMG_____ DATE 10/23/2015_____

GCS FORM: G19
(JUNE 1992)

GOLDER ASSOCIATES

GEOMEMBRANE REPAIR LOG

PROJECT NUMBER: 130 2962CQA
PROJECT TITLE: OU3 RA Construction
OWNER: Solutia
LOCATION: Anniston AL
CONTRACTOR: Taylor

PASSING TRIAL SEAMS

NO.	TIME	TECH. ID
TX01	0745	IB
TX04	1305	IB

MACHINE NUMBER 39

DATE 10/22/2015

SHEET NO. 3/3

	DEFECT CODE	REPAIR DATE	APPROX. TIME	REPAIR TYPE	APPROX. DIMENSION	WELD TECH.	MON.	REMARKS
1	5J	10/22/2015	1509	P	1X1	IB	SC	
2	5P	10/22/2015	1512	P	2X4	IB	SC	
3	5K	10/22/2015	1518	P	1X1	IB	SC	
4	5S	10/22/2015	1520	P	1X1	IB	SC	
5	6B	10/22/2015	1527	P	2X4	IB	SC	
6	5X	10/22/2015	1530	CAP	2X2	IB	SC	
7	6A	10/22/2015	1535	P	2X4	IB	SC	
8	5R	10/22/2015	1537	BEAD	1	IB	SC	
9	5N	10/22/2015	1539	P	1X1	IB	SC	
10	6C	10/22/2015	1541	P	2X4	IB	SC	
11								
12								
13								
14								
15								
16								
17								
18								
19								
20								
21								
22								
23								
24								
25								

REPAIR TYPE: P - PATCH, C - CAP, RS - RECONSTRUCTED SEAM, G&W - GRIND WELD

REVIEWED BY: _KMG_____ DATE _10/23/2015_____

GCS FORM: G19
(JUNE 1992)

GOLDER ASSOCIATES

APPENDIX K

COLDWATER MOUNTAIN BORROW AREA CONFORMANCE TESTING

SOLUTIA/OU-3 RA COVER CQA/AL
SUMMARY OF SOIL DATA

Sample Identification	Sample Type	Sample Depth	Soil Classi-fication	Natural Moisture %	Atterberg Limits				Grain Size Distribution			Compaction		Gs	Unit Weight		Permeability (cm/sec)	Additional Tests Conducted (See Notes)
					L.L.	P.L.	P.I.	L.I.	% Finer No. 4 Sieve	% Finer No. 200 Sieve	% Finer .005 mm	Maximum Dry Density (lb/cuft)	Optimum Moisture %		Moisture %	Dry (lb/cuft)		
7/22/2015 CMT BORROW	Bulk	5.0'	CL	11.7	31	21	10	-0.89	91.3	59.8	33.5	110.8	16.8	-	-	-	-	-

ABBREVIATIONS: LIQUID LIMIT (LL)
PLASTIC LIMIT (PL)
PLASTICITY INDEX (PI)
LIQUIDITY INDEX (LI)
SPECIFIC GRAVITY (Gs)
MOISTURE (Mc)

NOTES: T = TRIAXIAL TEST
U = UNCONFINED COMPRESSION TEST
C = CONSOLIDATION TEST
DS = DIRECT SHEAR TEST
O = ORGANIC CONTENT
P = pH

PARTICLE SIZE DISTRIBUTION & ATTERBERG LIMITS

ASTM D421, D422, D4318

PROJECT NAME: **SOLUTIA/OU-3 RA COVER CQA/AL**
SAMPLE ID: **7/22/2015 CMT Borrow** Depth: **5.0'**
TYPE: **Bulk**

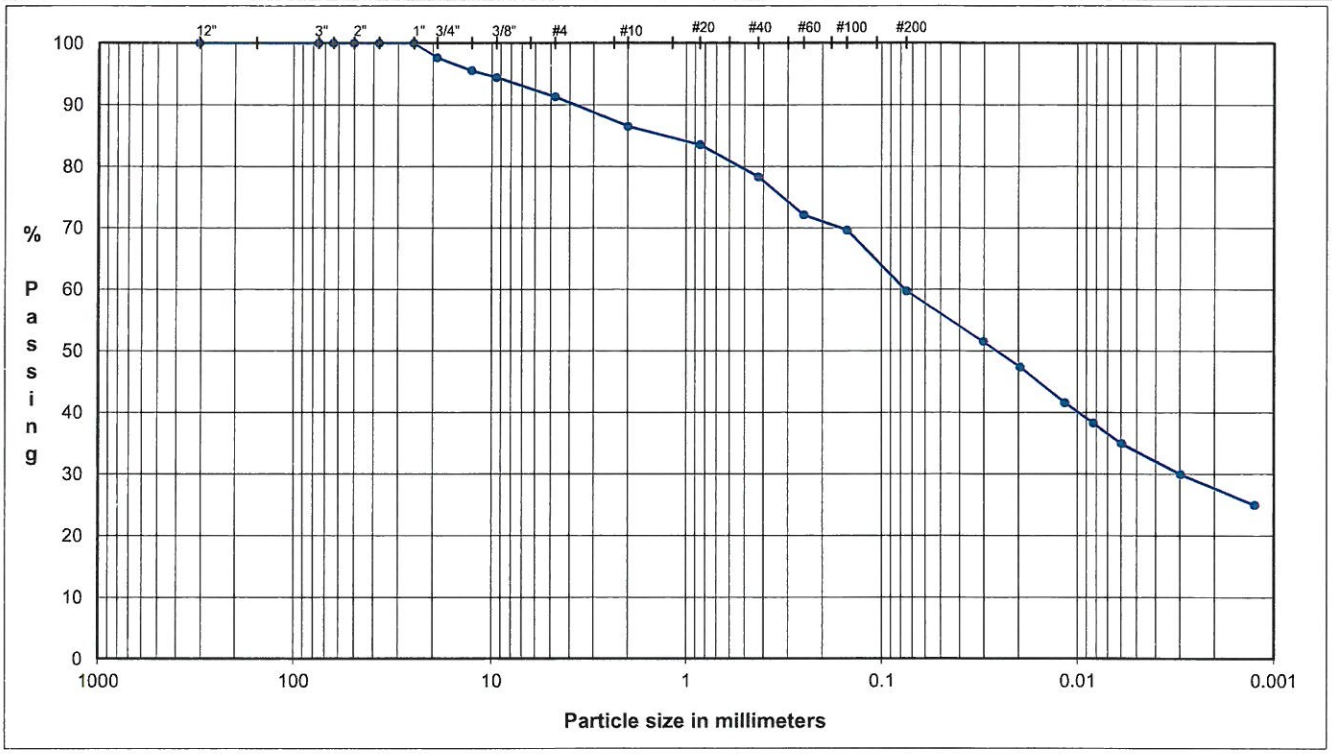

COBBLES	GRAVEL		SAND			FINES
	Coarse	Fine	Coarse	Medium	Fine	Silt or Clay

U.S. Standard Sieves Sizes and Numbers

	Particle Size (mm)	% Passing	Particle Size Classification	Percentage
12.0"	304.8	**100.0**		
3.0"	75.0	**100.0**	Cobbles	**0.0**
2.5"	63.5	**100.0**		
2.0"	50.0	**100.0**		
1.5"	37.5	**100.0**		
1.0"	25.0	**100.0**		
0.75"	19.0	**97.6**	Coarse Gravel	**2.4**
0.50"	12.7	**95.6**		
0.375"	9.5	**94.5**		
#4	4.8	**91.3**	Fine Gravel	**6.3**
#10	2.00	**86.5**	Coarse Sand	**4.8**
#20	0.85	**83.5**		
#40	0.43	**78.3**	Medium Sand	**8.2**
#60	0.25	**72.2**		
#100	0.15	**69.7**		
#200	0.075	**59.8**	Fine Sand	**18.5**

Hydrometer Analysis

(mm)	%Finer		
0.030	**51.6**		
0.020	**47.4**		
0.012	**41.6**	Fines	
0.0083	**38.3**	Silt or Clay	**59.8**
0.0060	**34.9**		
0.0030	**29.9**		
0.0013	**25.0**		

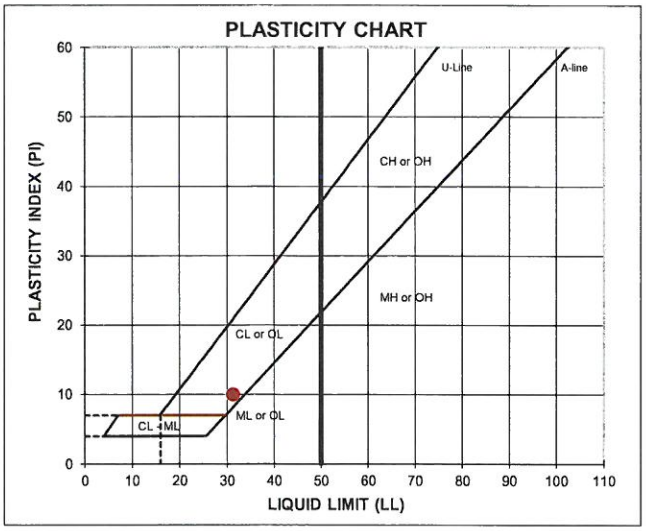

ATTERBERG LIMITS
Method -B (Dry preparation)

M_c	LL	PL	PI	LI
11.7	**31**	**21**	**10**	**-0.89**

LL (oven-dried) / < 0.75 - ORGANIC (OL/OH)

DESCRIPTION: sandy SILTY CLAY, fine to coarse, some fine to coarse gravel; yellowish brown.

USCS: CL

TECH TJ/CG
DATE 7/28/15
CHECK
REVIEW
APPROVE

MOISTURE / DRY DENSITY CURVE
ASTM D 698 Method A

Mechanical	Standard	Moist Method

PROJECT NAME: SOLUTIA/OU-3 RA COVER CQA/AL
PROJECT NUMBER: 1302962-CQA
SAMPLE ID: 7/22/2015 CMT Borrow DEPTH: 5.0' SAMPLE TYPE: Bulk

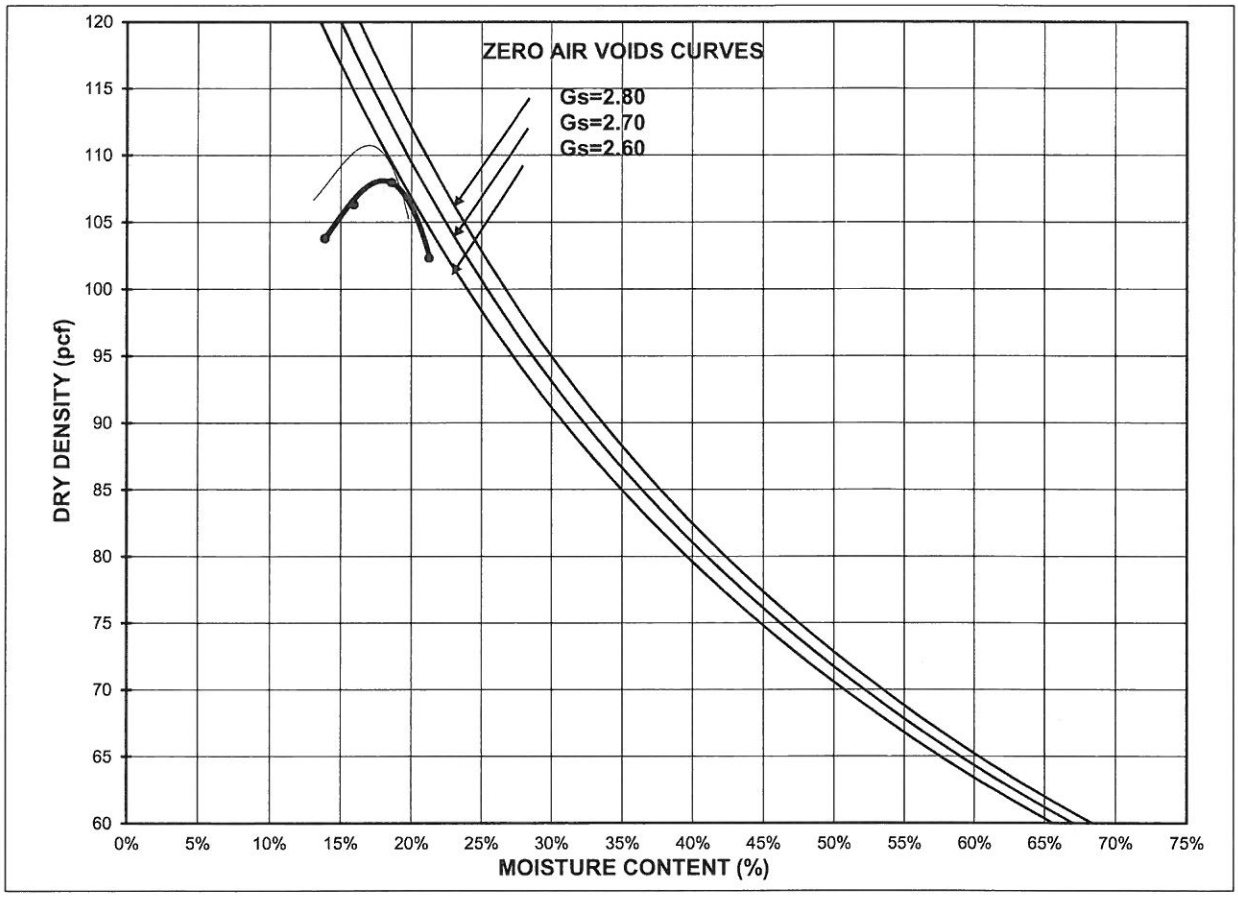

COMPACTION POINTS		
Specimen Number	Dry Density (pcf)	Moisture Content (%)
1	103.8	13.9%
2	106.3	15.9%
3	107.9	18.6%
4	102.3	21.3%

Maximum Dry Density (pcf)	108.1
Optimum Moisture (%)	18.0
Corrected Maximum Dry Density (pcf)	110.8
Corrected Optimum Moisture (%)	16.8
As-Received Moisture Content	11.7%
% Retained on # 4 sieve	8.7%
% Retained on 3/8" sieve	
% Retained on 3/4" sieve	

DESCRIPTION sandy SILTY CLAY, fine to coarse, some fine to coarse gravel; yellowish brown.

USCS CL

CHECK JM
REVIEW
APPROVE

SOLUTIA/OU-3 RA COVER CQA/AL
SUMMARY OF DATA

Sample Identification	Sample Type	Sample Depth	Soil Classi-fication	Natural Moisture %	Atterberg Limits				Grain Size Distribution			Compaction		One point Compaction Test		Permeability (cm/sec)	Additional Tests Conducted (See Notes)
					L.L.	P.L.	P.I.	L.I.	% Finer No. 4 Sieve	% Finer No. 200 Sieve	% Finer .005 mm	Maximum Dry Density (pcf)	Optimum Moisture %	Moisture %	Dry Density (pcf)		
7/22/2015 CMT BORROW	Bulk	5.0'	CL	11.7	31	21	10	-0.89	91.3	59.8	33.5	110.8	16.8	-	-	-	-
VULCAN DGA	Bulk	-	SW	2.7	-	-	-	-	55.4	4.7	-	144.3	5.3	-	-	-	-
VDGA-03	Bulk	-	SW-SM	4.0	-	-	-	-	65.3	6.3	-	-	-	-	-	-	-
REC FIELD 80-20 DGA	Bulk	-	(SW-SM)	8.2	-	-	-	-	-	-	-	138.5	5.6	-	-	-	-
VDGA-04	Bulk	-	-	2.8	-	-	-	-	-	-	-	-	-	2.2	133.0	-	-
GDM-1	Bulk	-	GP	-	-	-	-	-	1.5	0.6	-	-	-	-	-	-	-
CMT-01	Bulk	-	(CL)	10.1	-	-	-	-	89.2	50.2	20.8	116.6	12.3	-	-	-	-
CMT-02	Bulk	-	(CL)	10.1	-	-	-	-	84.0	50.5	-	119.0	12.0	-	-	-	-
CMT-03	Bulk	-	(CL)	11.0	-	-	-	-	84.5	50.9	26.6	117.5	13.0	-	-	-	-
MCPS-1	Jar	-	(SC)	10.3	-	-	-	-	84.2	46.4	21.8	-	-	-	-	-	-

ABBREVIATIONS: LIQUID LIMIT (LL)
PLASTIC LIMIT (PL)
PLASTICITY INDEX (PI)
LIQUIDITY INDEX (LI)
SPECIFIC GRAVITY (Gs)
MOISTURE (Mc)

NOTES: T = TRIAXIAL TEST
U = UNCONFINED COMPRESSION TEST
C = CONSOLIDATION TEST
DS = DIRECT SHEAR TEST
O = ORGANIC CONTENT
P = pH

PARTICLE SIZE DISTRIBUTION & ATTERBERG LIMITS

ASTM D421, D422, D4318

PROJECT NAME: **SOLUTIA/OU-3 RA COVER CQA/AL**
SAMPLE ID: **CMT-01** Depth: -
TYPE: **Bulk**

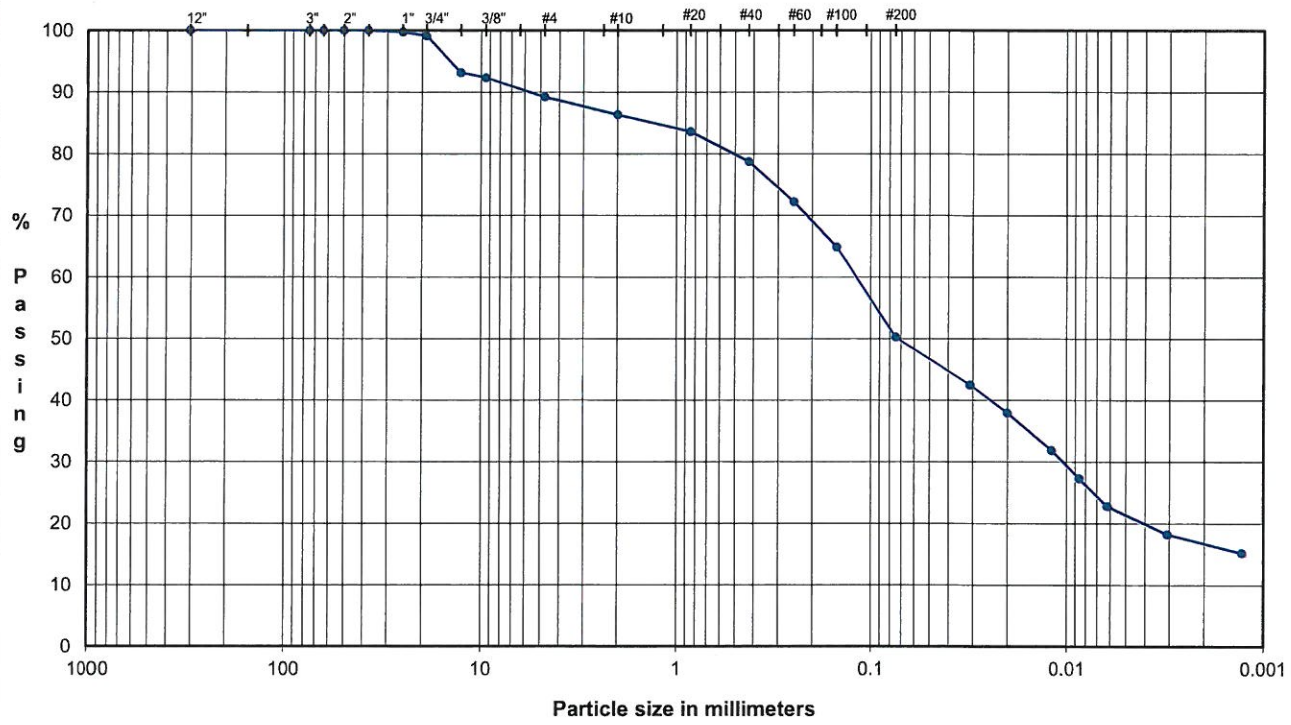

COBBLES	Coarse GRAVEL	Fine GRAVEL	Coarse SAND	Medium SAND	Fine SAND	Silt or Clay FINES

U.S. Standard Sieves Sizes and Numbers

	Particle Size (mm)	% Passing	Particle Size Classification	Percentage
12.0"	304.8	**100.0**		
3.0"	75.0	**100.0**	Cobbles	**0.0**
2.5"	63.5	**100.0**		
2.0"	50.0	**100.0**		
1.5"	37.5	**100.0**		
1.0"	25.0	**99.7**		
0.75"	19.0	**99.1**	Coarse Gravel	**0.9**
0.50"	12.7	**93.2**		
0.375"	9.5	**92.3**		
#4	4.8	**89.2**	Fine Gravel	**9.9**
#10	2.00	**86.3**	Coarse Sand	**2.8**
#20	0.85	**83.6**		
#40	0.43	**78.7**	Medium Sand	**7.6**
#60	0.25	**72.2**		
#100	0.15	**64.9**		
#200	0.075	**50.2**	Fine Sand	**28.5**

Hydrometer Analysis

(mm)	%Finer		
0.031	**42.4**		
0.020	**37.9**		
0.012	**31.8**	Fines Silt or Clay	**50.2**
0.0087	**27.3**		
0.0063	**22.7**		
0.0031	**18.2**		
0.0013	**15.1**		

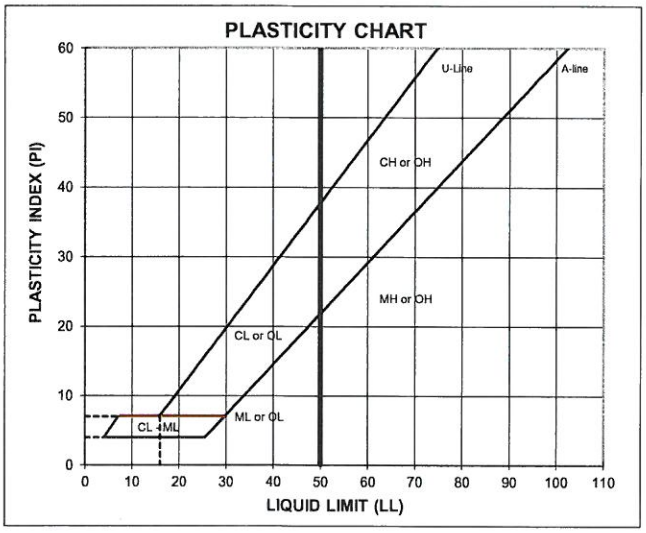

ATTERBERG LIMITS

Method -B (Dry preparation)

M_c	LL	PL	PI	LI
10.1				

LL (oven-dried) / < 0.75 = ORGANIC (OL/OH)

DESCRIPTION: SILTY CLAY and SAND, fine to coarse, some fine to coarse gravel; pale reddish brown.

USCS: (CL)

TECH	TJ/CG
DATE	9/17/15
CHECK	
REVIEW	
APPROVE	

MOISTURE / DRY DENSITY CURVE
ASTM D 698 Method A

Mechanical	Standard	Moist Method

PROJECT NAME: SOLUTIA/OU-3 RA COVER CQA/AL
PROJECT NUMBER: 1302962-CQA
SAMPLE ID: CMT-01 DEPTH: - SAMPLE TYPE: Bulk

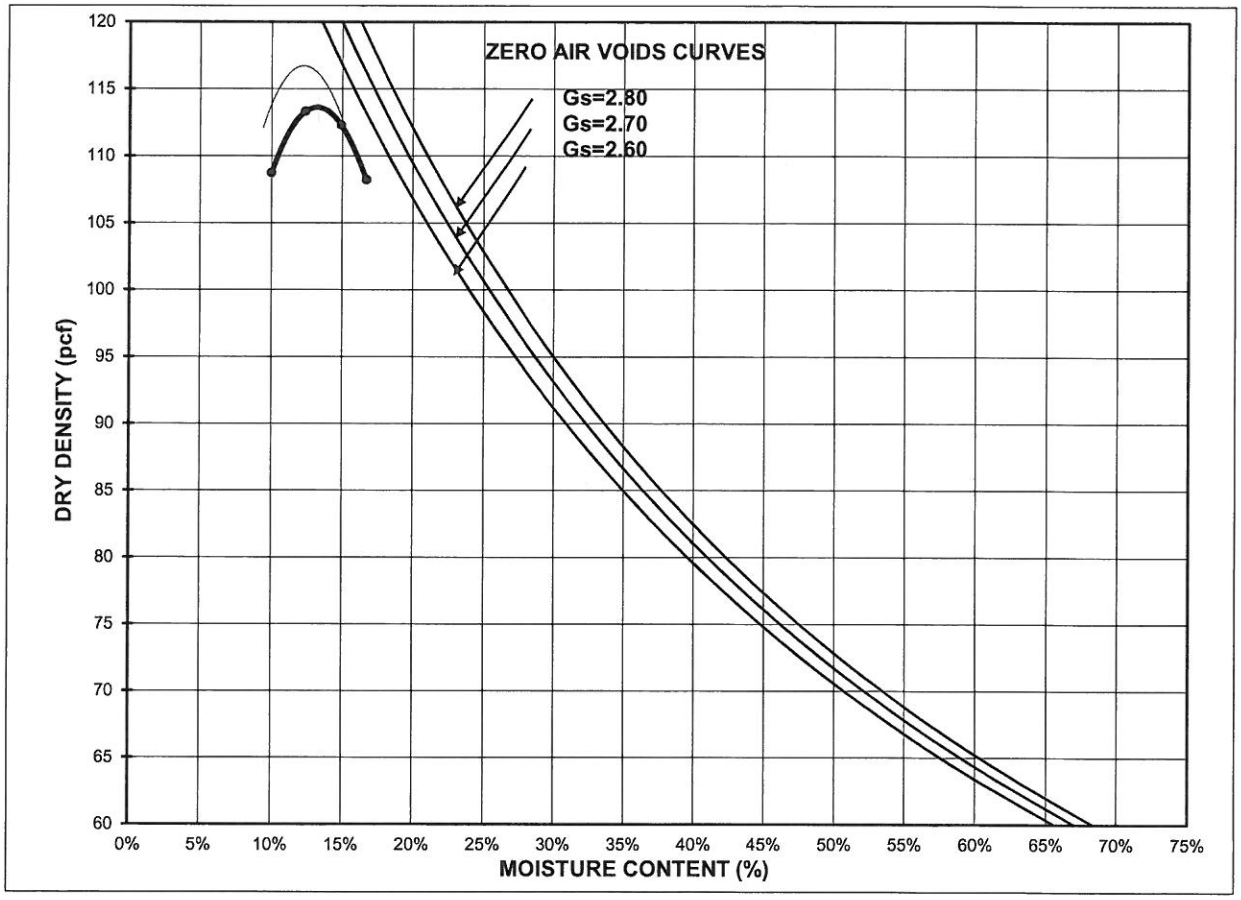

COMPACTION POINTS		
Specimen Number	Dry Density (pcf)	Moisture Content (%)
1	108.7	10.0%
2	113.3	12.4%
3	112.3	14.9%
4	108.2	16.7%

Maximum Dry Density (pcf)	113.5
Optimum Moisture (%)	13.3
Corrected Maximum Dry Density (pcf)	116.6
Corrected Optimum Moisture (%)	12.3
As-Received Moisture Content	10.1%
% Retained on # 4 sieve	10.8%
% Retained on 3/8" sieve	
% Retained on 3/4" sieve	

DESCRIPTION SILTY CLAY and SAND, fine to coarse, some fine to coarse gravel; pale reddish brown.

USCS (CL)

CHECK
REVIEW
APPROVE

PARTICLE SIZE DISTRIBUTION & ATTERBERG LIMITS

ASTM D6913, D4318

PROJECT NAME: **SOLUTIA/OU-3 RA COVER CQA/AL**
SAMPLE ID: **CMT-02** - Depth: -
TYPE: **Bulk**

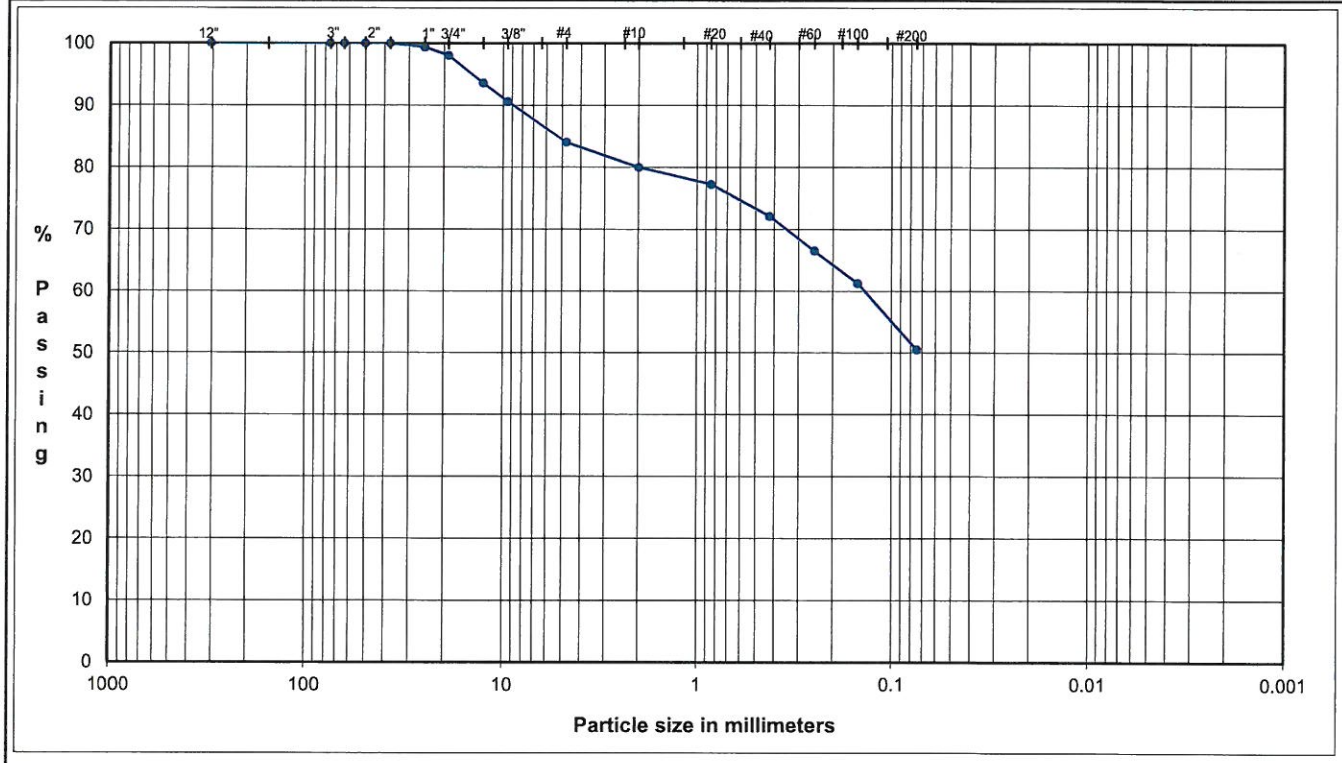

COBBLES	GRAVEL		SAND			FINES
	Coarse	Fine	Coarse	Medium	Fine	Silt or Clay

U.S. Standard Sieves Sizes and Numbers

	Particle Size (mm)	% Passing	Particle Size Classification	Percentage
12.0"	304.8	**100.0**		
3.0"	75.0	**100.0**	Cobbles	**0.0**
2.5"	63.5	**100.0**		
2.0"	50.0	**100.0**		
1.5"	37.5	**100.0**		
1.0"	25.0	**99.4**		
0.75"	19.0	**98.0**	Coarse Gravel	**2.0**
0.50"	12.7	**93.6**		
0.375"	9.5	**90.6**		
#4	4.8	**84.0**	Fine Gravel	**14.0**
#10	2.0	**80.0**	Coarse Sand	**4.0**
#20	0.85	**77.2**		
#40	0.43	**72.1**	Medium Sand	**7.9**
#60	0.25	**66.5**		
#100	0.15	**61.3**		
#200	0.075	**50.5**	Fine Sand	**21.6**
			Fines	**50.5**

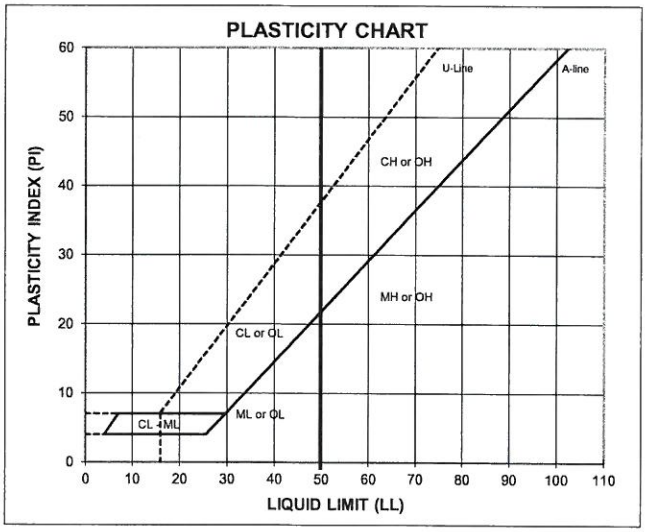

ATTERBERG LIMITS
Method -B (Dry preparation)

M_c	LL	PL	PI	LI
10.1				

LL (oven-dried) / < 0.75 - ORGANIC (OL/OH)

DESCRIPTION: gravelly SILTY CLAY and SAND, fine to coarse, fine to coarse gravel; brownish yellow.

USCS: (CL)

TECH	CG
DATE	10/4/15
CHECK	
REVIEW	
APPROVE	

MOISTURE / DRY DENSITY CURVE
ASTM D 698 Method A

Mechanical	Standard	Moist Method

PROJECT NAME: SOLUTIA/OU-3 RA COVER CQA/AL
PROJECT NUMBER: 130-2962-CQA
SAMPLE ID: CMT-02 DEPTH: - SAMPLE TYPE: Bulk

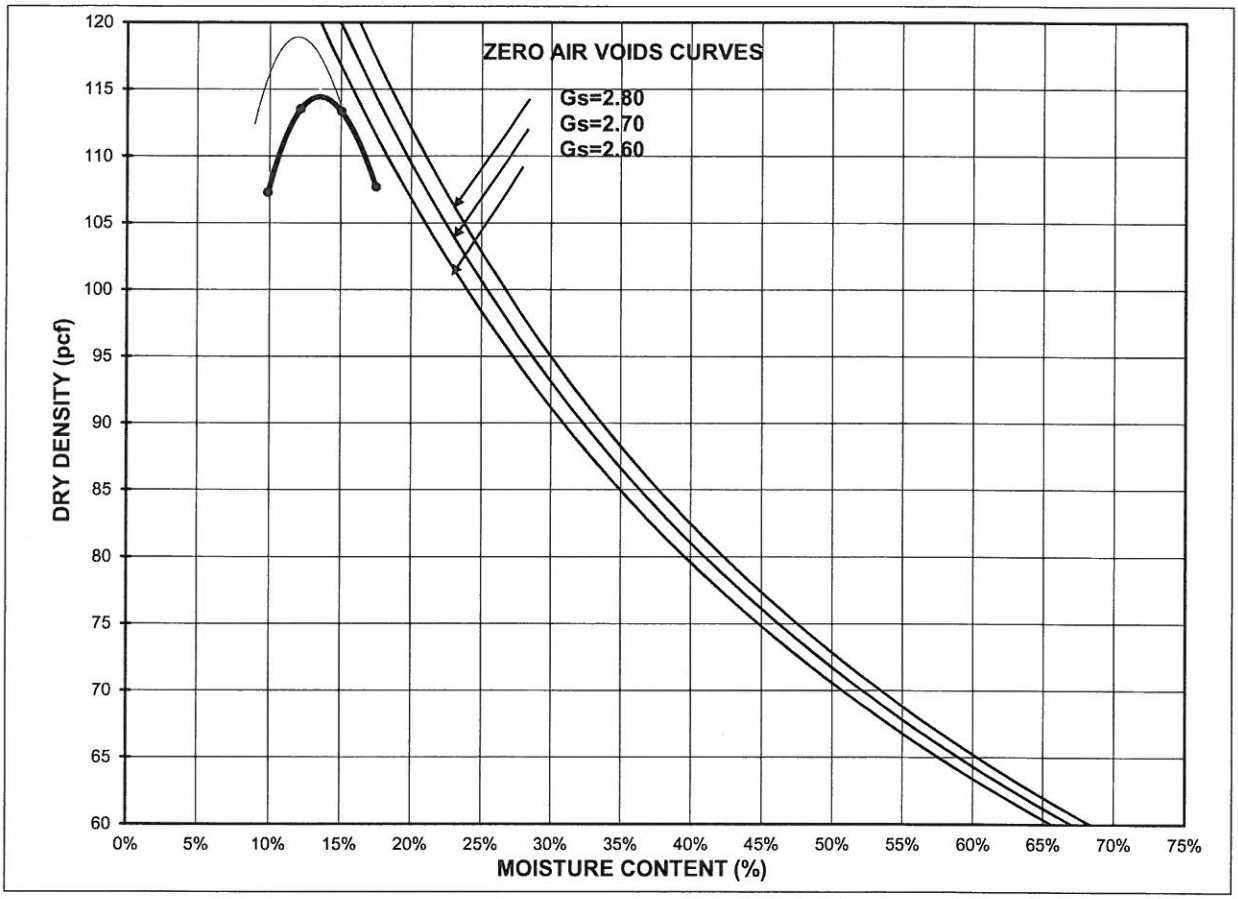

COMPACTION POINTS		
Specimen Number	Dry Density (pcf)	Moisture Content (%)
1	107.3	9.9%
2	113.5	12.2%
3	113.3	15.1%
4	107.7	17.5%

Maximum Dry Density (pcf)	114.5
Optimum Moisture (%)	13.5
Corrected Maximum Dry Density (pcf)	119.0
Corrected Optimum Moisture (%)	12.0
As-Received Moisture Content	10.1%
% Retained on # 4 sieve	16.0%
% Retained on 3/8" sieve	
% Retained on 3/4" sieve	

DESCRIPTION gravelly SILTY CLAY and SAND, fine to coarse, fine to coarse gravel; brownish yellow.

USCS (CL)

CHECK
REVIEW
APPROVE

PARTICLE SIZE DISTRIBUTION & ATTERBERG LIMITS

ASTM D421, D422, D4318

PROJECT NAME: **SOLUTIA/OU-3 RA COVER CQA/AL**
SAMPLE ID: **CMT-03** - Depth: -
TYPE: **Bulk**

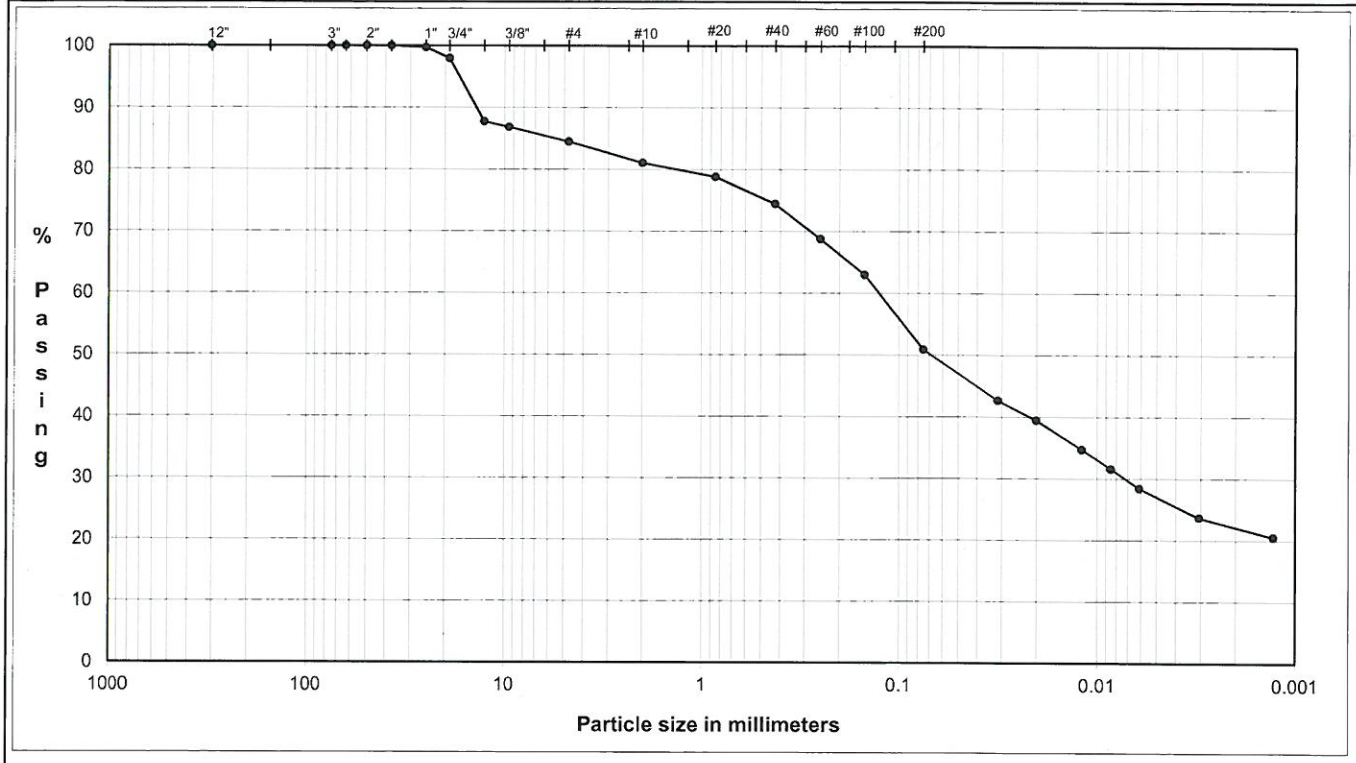

COBBLES	GRAVEL		SAND			FINES
	Coarse	Fine	Coarse	Medium	Fine	Silt or Clay

U.S. Standard Sieves Sizes and Numbers

	Particle Size (mm)	% Passing	Particle Size Classification	Percentage
12.0"	304.8	**100.0**		
3.0"	75.0	**100.0**	Cobbles	**0.0**
2.5"	63.5	**100.0**		
2.0"	50.0	**100.0**		
1.5"	37.5	**100.0**		
1.0"	25.0	**99.7**		
0.75"	19.0	**98.0**	Coarse Gravel	**2.0**
0.50"	12.7	**87.7**		
0.375"	9.5	**86.9**		
#4	4.8	**84.5**	Fine Gravel	**13.5**
#10	2.00	**81.1**	Coarse Sand	**3.4**
#20	0.85	**78.8**		
#40	0.43	**74.4**	Medium Sand	**6.6**
#60	0.25	**68.8**		
#100	0.15	**63.0**		
#200	0.075	**50.9**	Fine Sand	**23.5**

Hydrometer Analysis

(mm)	%Finer		
0.031	**42.6**		
0.020	**39.5**		
0.012	**34.8**	Fines	
0.0085	**31.6**	Silt or Clay	**50.9**
0.0061	**28.4**		
0.0031	**23.7**		
0.0013	**20.5**		

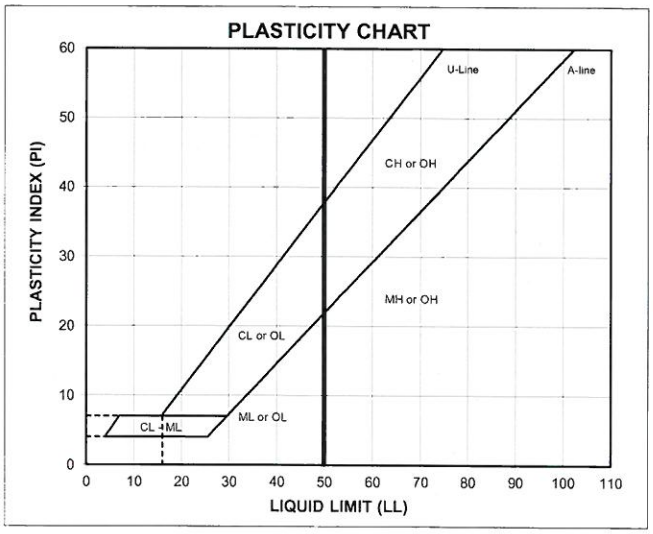

ATTERBERG LIMITS

Method -B (Dry preparation)

M_c	LL	PL	PI	LI
11.0				

LL (oven-dried) / LL (not dried) < 0.75 - ORGANIC (OL-OH)

DESCRIPTION: gravelly sandy SILTY CLAY, fine to coarse, fine to coarse gravel; reddish brown.

USCS: (CL)

TECH	TW/AL
DATE	10/6/15
CHECK	
REVIEW	
APPROVE	

MOISTURE / DRY DENSITY CURVE
ASTM D 698 Method A

Mechanical	Standard	Moist Method

PROJECT NAME: SOLUTIA/OU-3 RA COVER CQA/AL
PROJECT NUMBER: 1302962-CQA
SAMPLE ID: CMT-03 - DEPTH: - SAMPLE TYPE: Bulk

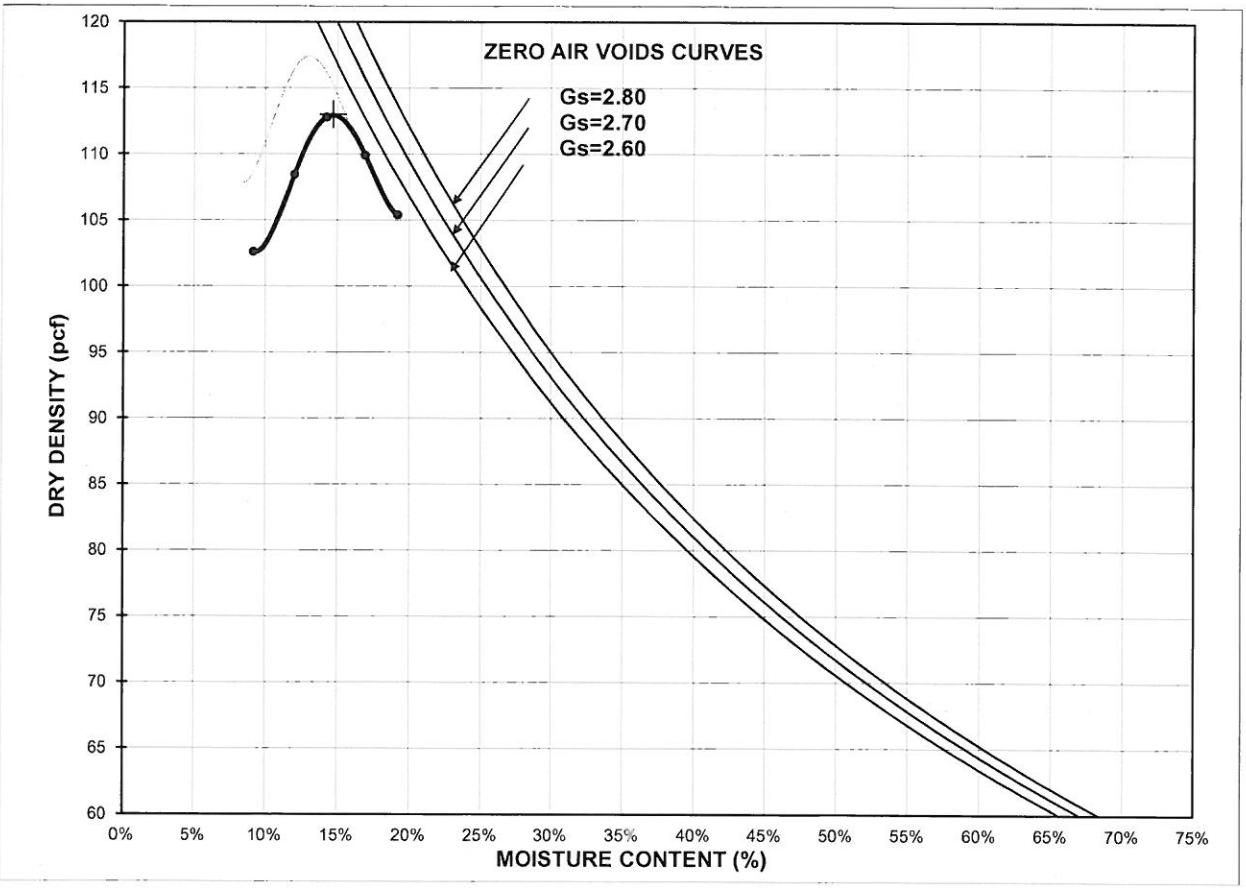

COMPACTION POINTS		
Specimen Number	Dry Density (pcf)	Moisture Content (%)
1	102.6	9.2%
2	108.4	12.0%
3	112.8	14.2%
4	109.9	16.9%
5	105.4	19.2%

Maximum Dry Density (pcf)	113.0
Optimum Moisture (%)	14.7
Corrected Maximum Dry Density (pcf)	117.5
Corrected Optimum Moisture (%)	13.0
As-Received Moisture Content	11.0%
% Retained on # 4 sieve	15.5%
% Retained on 3/8" sieve	
% Retained on 3/4" sieve	

DESCRIPTION gravelly sandy SILTY CLAY, fine to coarse, fine to coarse gravel; reddish brown.

USCS (CL)

CHECK **REVIEW** **APPROVE**

PARTICLE SIZE DISTRIBUTION & ATTERBERG LIMITS

ASTM D421, D422, D4318

PROJECT NAME: **SOLUTIA/OU-3 RA COVER CQA/AL**
SAMPLE ID: **MCPS-1** - Depth: -
TYPE: **Jar**

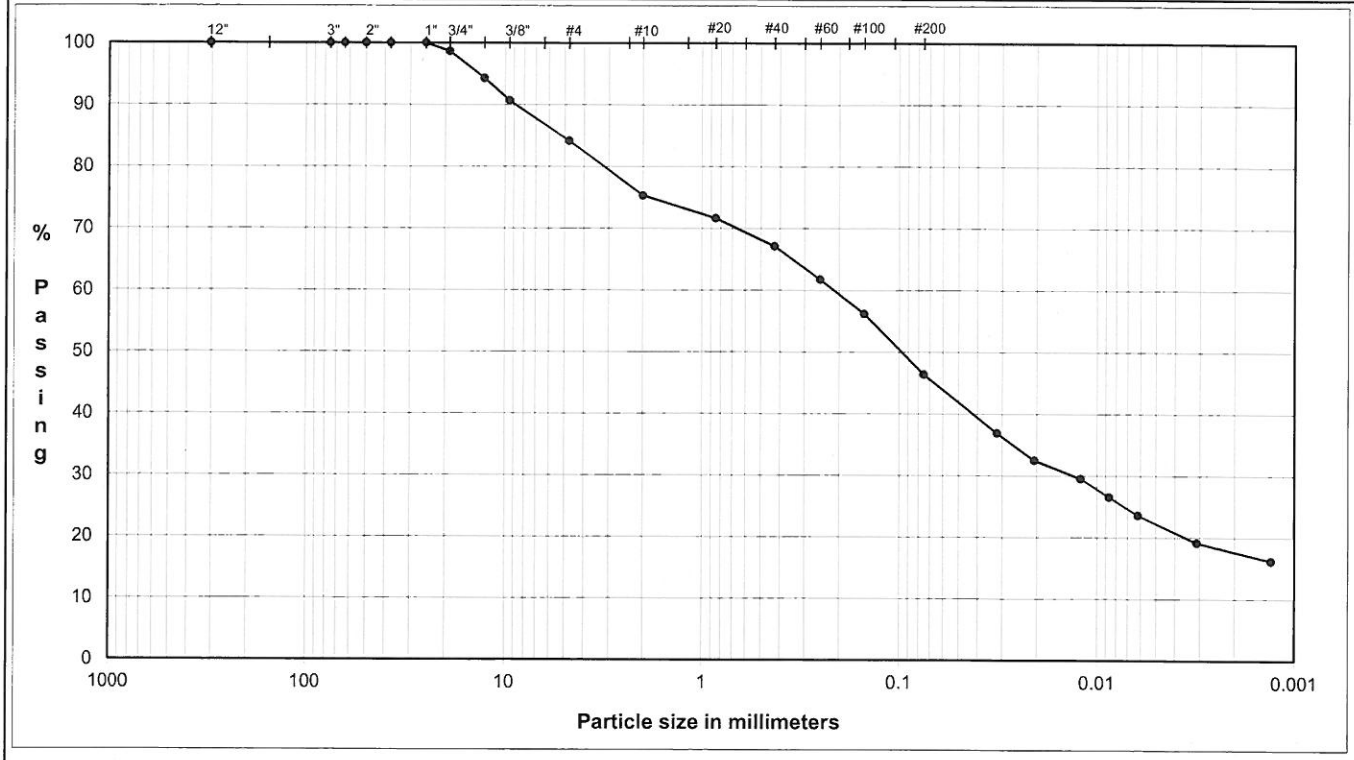

	Coarse	Fine	Coarse	Medium	Fine	Silt or Clay
COBBLES	GRAVEL		SAND			FINES

U.S. Standard Sieves Sizes and Numbers

	Particle Size (mm)	% Passing	Particle Size Classification	Percentage
12.0"	304.8	**100.0**		
3.0"	75.0	**100.0**	Cobbles	**0.0**
2.5"	63.5	**100.0**		
2.0"	50.0	**100.0**		
1.5"	37.5	**100.0**		
1.0"	25.0	**100.0**		
0.75"	19.0	**98.6**	Coarse Gravel	**1.4**
0.50"	12.7	**94.3**		
0.375"	9.5	**90.7**		
#4	4.8	**84.2**	Fine Gravel	**14.5**
#10	2.00	**75.3**	Coarse Sand	**8.8**
#20	0.85	**71.7**		
#40	0.43	**67.1**	Medium Sand	**8.2**
#60	0.25	**61.8**		
#100	0.15	**56.2**		
#200	0.075	**46.4**	Fine Sand	**20.8**

Hydrometer Analysis

(mm)	%Finer		
0.032	**36.9**		
0.021	**32.5**		
0.012	**29.5**	Fines	
0.0087	**26.6**	Silt or Clay	**46.4**
0.0062	**23.6**		
0.0031	**19.2**		
0.0013	**16.2**		

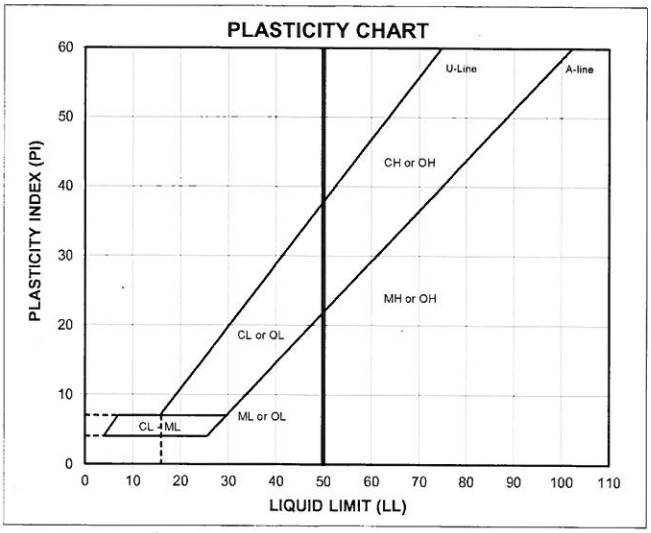

ATTERBERG LIMITS
Method -B (Dry preparation)

M_c	LL	PL	PI	LI
10.3				

LL (oven-dried) / < 0.75 - ORGANIC (OL/OH)

DESCRIPTION: gravelly SAND and SILTY CLAY, fine to coarse, fine to coarse gravel; reddish brown.

USCS: (SC)

TECH	TW/AL
DATE	10/6/15
CHECK	
REVIEW	
APPROVE	

SOLUTIA/OU-3 RA COVER CQA/AL
SUMMARY OF SOIL DATA

Sample Identification		Sample Type	Sample Depth	Soil Classi-fication	Received Moisture %	Atterberg Limits				Grain Size Distribution			Compaction		Gs	Unit Weight		Permeability (cm/sec)	Additional Tests Conducted (See Notes)
Boring No.	Sample ID					L.L.	P.L.	P.I.	L.I.	% Finer No. 4 Sieve	% Finer No. 200 Sieve	% Finer .005 mm	Maximum Dry Density (pcf)	Optimum Moisture %		Moisture %	Dry (pcf)		
Area A Subgrade	A SUB-1	Jar	0-6"	CL	16.3	37	22	15	-0.40	96.6	63.2	39.0	-	-	-	-	-	-	-
Area A Subgrade	A SUB-2	Jar	0-6"	CL	15.2	34	22	12	-0.61	100.0	55.0	37.0	-	-	-	-	-	-	-
Area A Subgrade	A SUB-3	Jar	0-6"	CL	18.5	37	22	15	-0.24	92.2	60.9	40.0	-	-	-	-	-	-	-
Area A Subgrade	A SUB-4	Jar	0-6"	CL	15.8	36	23	13	-0.55	85.1	56.2	35.0	-	-	-	-	-	-	-
Area A	CSPS-1	Bag	-	(CL)	17.9	-	-	-	-	93.2	75.0	-	-	-	-	-	-	-	-
Area A	CSPS-2	Bag	-	(CL)	13.4	-	-	-	-	85.7	60.7	-	-	-	-	-	-	-	-
Area E	PS-1	Bag	-	(CL)	14.3	-	-	-	-	85.1	53.0	-	-	-	-	-	-	-	-
Area E	PS-2	Bag	-	(CL)	13.8	-	-	-	-	89.7	59.8	-	-	-	-	-	-	-	-
Area E	CSPS-1	Bag	-	(CL)	17.3	-	-	-	-	84.5	58.5	-	-	-	-	-	-	-	-
Area E	CSPS-2	Bag	-	(CL)	16.3	-	-	-	-	82.6	55.6	-	-	-	-	-	-	-	-
Area E	TS-1	Bag	-	(CL)	13.8	-	-	-	-	98.6	68.0	-	-	-	-	-	-	-	-
Area E	TS-2	Bag	-	(CL)	14.3	-	-	-	-	97.5	68.9	-	-	-	-	-	-	-	-

ABBREVIATIONS: LIQUID LIMIT (LL)
PLASTIC LIMIT (PL)
PLASTICITY INDEX (PI)
LIQUIDITY INDEX (LI)
SPECIFIC GRAVITY (Gs)
MOISTURE (Mc)

NOTES: T = TRIAXIAL TEST
U = UNCONFINED COMPRESSION TEST
C = CONSOLIDATION TEST
DS = DIRECT SHEAR TEST
LOI = LOSS ON IGNITION

PARTICLE SIZE DISTRIBUTION & ATTERBERG LIMITS

ASTM D6913, D4318

PROJECT NAME: **SOLUTIA/OU-3 RA COVER CQA/AL**
SAMPLE ID: **Area A CSPS-1** Depth: -
TYPE: **Bag**

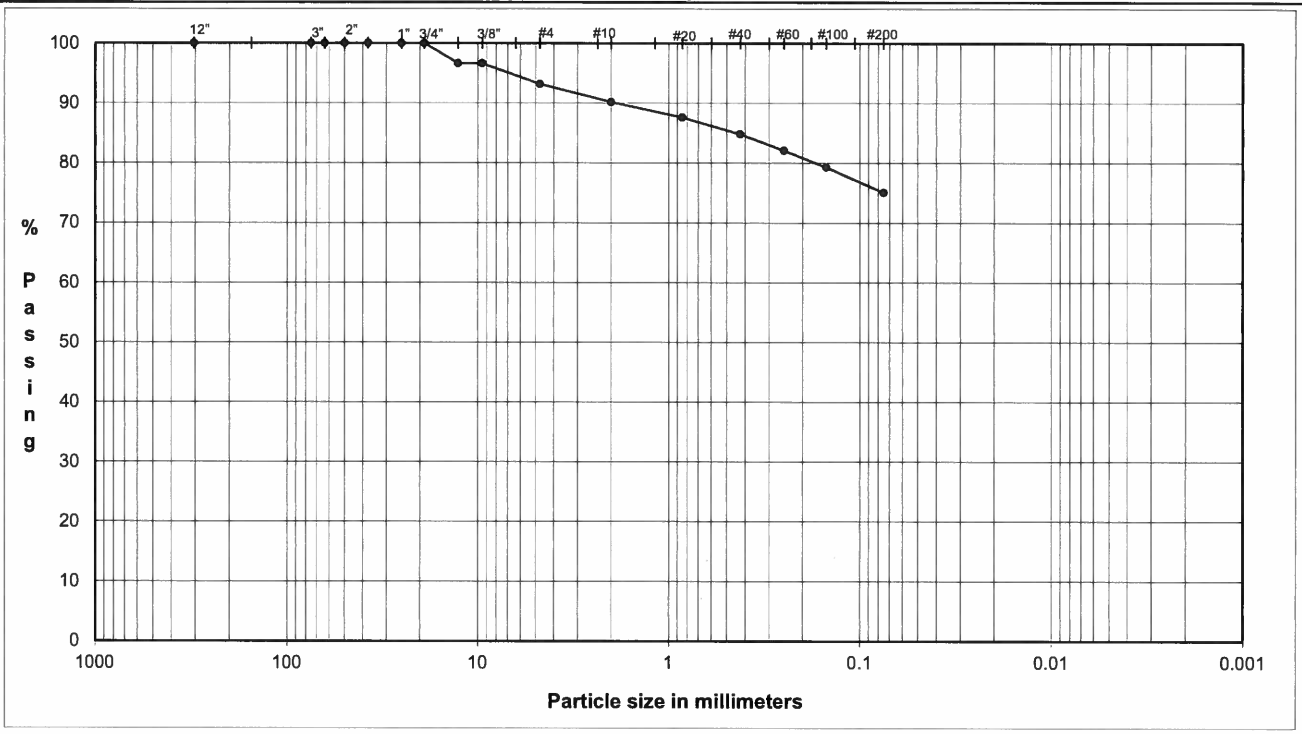

	Coarse	Fine	Coarse	Medium	Fine	
COBBLES	GRAVEL		SAND			Silt or Clay FINES

U.S. Standard Sieves Sizes and Numbers

	Particle Size (mm)	% Passing	Particle Size Classification	Percentage
12.0"	304.8	**100.0**		
3.0"	75.0	**100.0**	Cobbles	**0.0**
2.5"	63.5	**100.0**		
2.0"	50.0	**100.0**		
1.5"	37.5	**100.0**		
1.0"	25.0	**100.0**		
0.75"	19.0	**100.0**	Coarse Gravel	**0.0**
0.50"	12.7	**96.6**		
0.375"	9.5	**96.6**		
#4	4.8	**93.2**	Fine Gravel	**6.8**
#10	2.00	**90.1**	Coarse Sand	**3.0**
#20	0.85	**87.6**		
#40	0.43	**84.8**	Medium Sand	**5.3**
#60	0.25	**82.1**		
#100	0.15	**79.3**		
#200	0.075	**75.0**	Fine Sand	**9.8**
			Fines	**75.0**

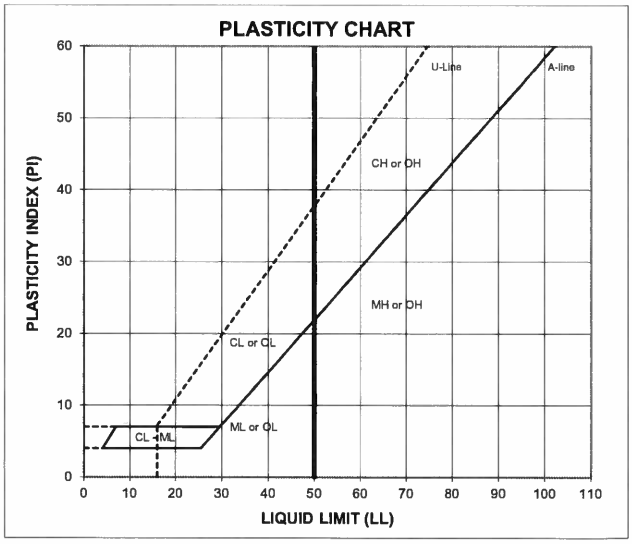

DESCRIPTION: sandy SILTY CLAY, fine to coarse, some fine gravel; dusky red.

USCS: (CL)

ATTERBERG LIMITS

Method -B (Dry preparation)

M_c	LL	PL	PI	LI
17.9				

LL (oven-dried) / < 0.75 = ORGANIC (OL/OH)

TECH	TJ
DATE	4/22/16
CHECK	
REVIEW	
APPROVE	

PARTICLE SIZE DISTRIBUTION & ATTERBERG LIMITS

ASTM D6913, D4318

PROJECT NAME: **SOLUTIA/OU-3 RA COVER CQA/AL**
SAMPLE ID: **Area A CSPS-2** Depth: -
TYPE: **Bag**

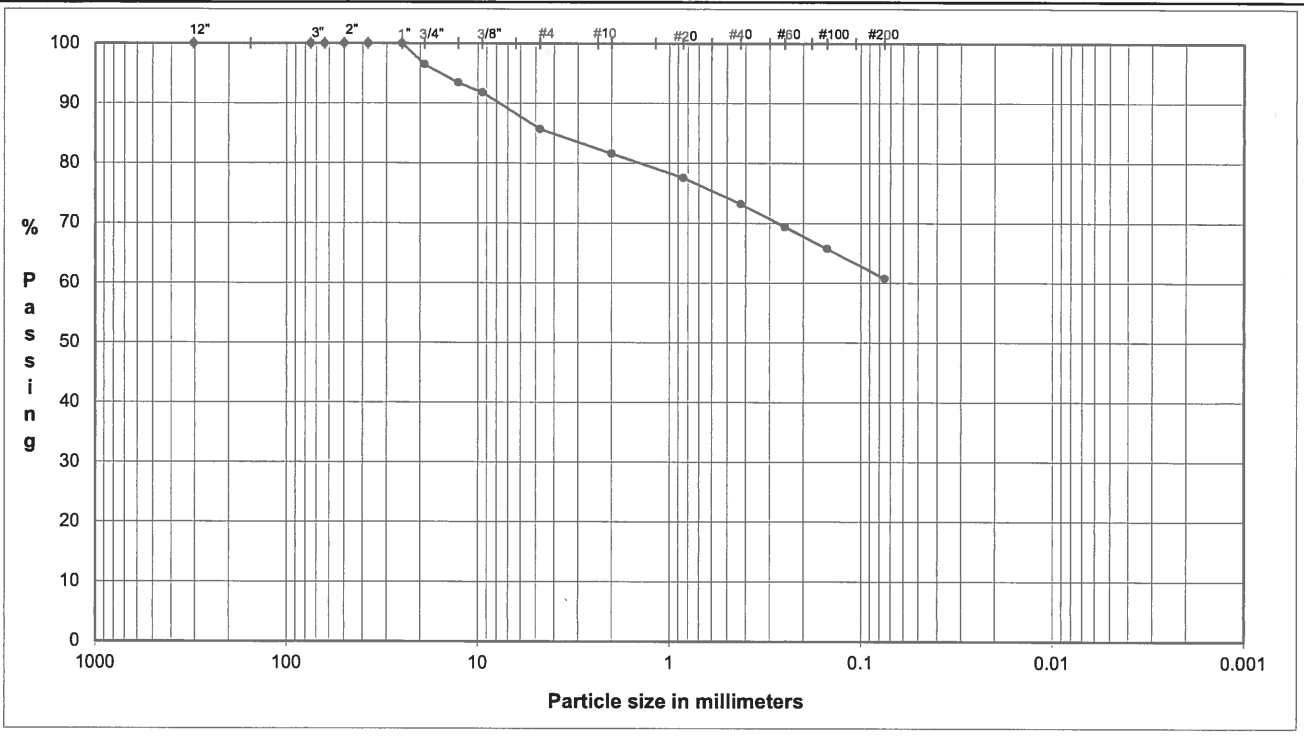

	Coarse	Fine	Coarse	Medium	Fine	Silt or Clay
COBBLES	GRAVEL		SAND			FINES

U.S. Standard Sieves Sizes and Numbers

	Particle Size (mm)	% Passing	Particle Size Classification	Percentage
12.0"	304.8	**100.0**		
3.0"	75.0	**100.0**	Cobbles	**0.0**
2.5"	63.5	**100.0**		
2.0"	50.0	**100.0**		
1.5"	37.5	**100.0**		
1.0"	25.0	**100.0**		
0.75"	19.0	**96.5**	Coarse Gravel	**3.5**
0.50"	12.7	**93.4**		
0.375"	9.5	**91.8**		
#4	4.8	**85.7**	Fine Gravel	**10.8**
#10	2.00	**81.6**	Coarse Sand	**4.1**
#20	0.85	**77.6**		
#40	0.43	**73.2**	Medium Sand	**8.4**
#60	0.25	**69.3**		
#100	0.15	**65.7**		
#200	0.075	**60.7**	Fine Sand	**12.5**
			Fines	**60.7**

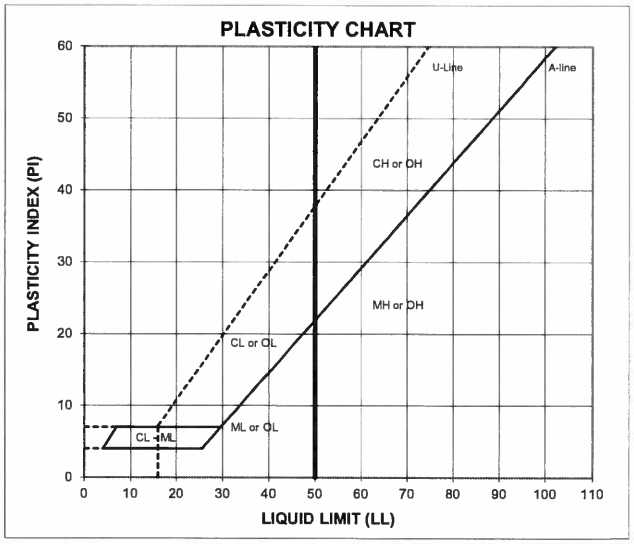

DESCRIPTION: sandy gravelly SILTY CLAY, fine to coarse, fine to coarse gravel; pale red.

USCS: (CL)

ATTERBERG LIMITS
Method -B (Dry preparation)

M_c	LL	PL	PI	LI
13.4				

LL (oven-dried) / < 0.75 = ORGANIC (OL/OH)

TECH	TJ
DATE	4/22/16
CHECK	
REVIEW	
APPROVE	

PARTICLE SIZE DISTRIBUTION & ATTERBERG LIMITS

ASTM D421, D422, D4318

PROJECT NAME: **SOLUTIA/OU-3 RA COVER CQA/AL**
SAMPLE ID: **MCPS-1** - Depth: -
TYPE: **Jar**

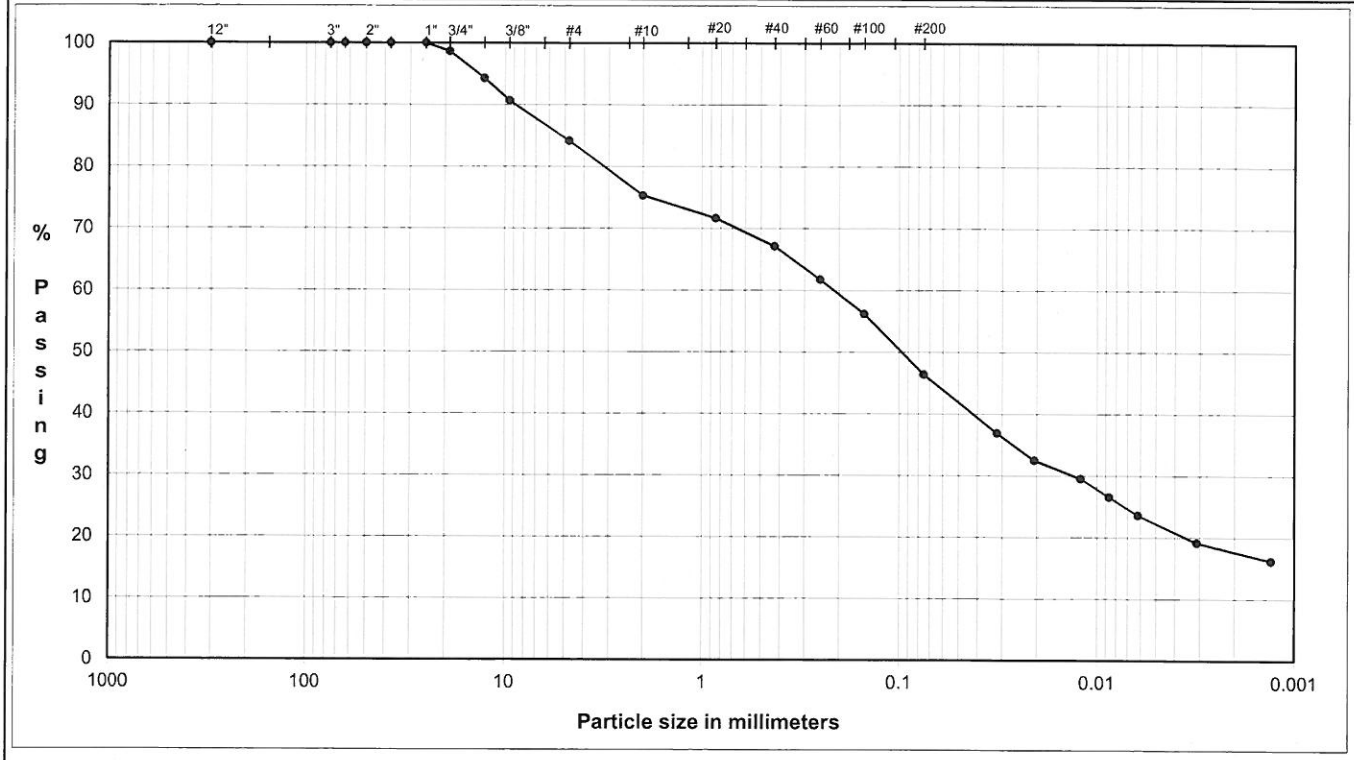

	Coarse	Fine	Coarse	Medium	Fine	Silt or Clay
COBBLES	GRAVEL		SAND			FINES

U.S. Standard Sieves Sizes and Numbers

	Particle Size (mm)	% Passing	Particle Size Classification	Percentage
12.0"	304.8	**100.0**		
3.0"	75.0	**100.0**	Cobbles	**0.0**
2.5"	63.5	**100.0**		
2.0"	50.0	**100.0**		
1.5"	37.5	**100.0**		
1.0"	25.0	**100.0**		
0.75"	19.0	**98.6**	Coarse Gravel	**1.4**
0.50"	12.7	**94.3**		
0.375"	9.5	**90.7**		
#4	4.8	**84.2**	Fine Gravel	**14.5**
#10	2.00	**75.3**	Coarse Sand	**8.8**
#20	0.85	**71.7**		
#40	0.43	**67.1**	Medium Sand	**8.2**
#60	0.25	**61.8**		
#100	0.15	**56.2**		
#200	0.075	**46.4**	Fine Sand	**20.8**

Hydrometer Analysis

(mm)	%Finer		
0.032	**36.9**		
0.021	**32.5**		
0.012	**29.5**	Fines	
0.0087	**26.6**	Silt or Clay	**46.4**
0.0062	**23.6**		
0.0031	**19.2**		
0.0013	**16.2**		

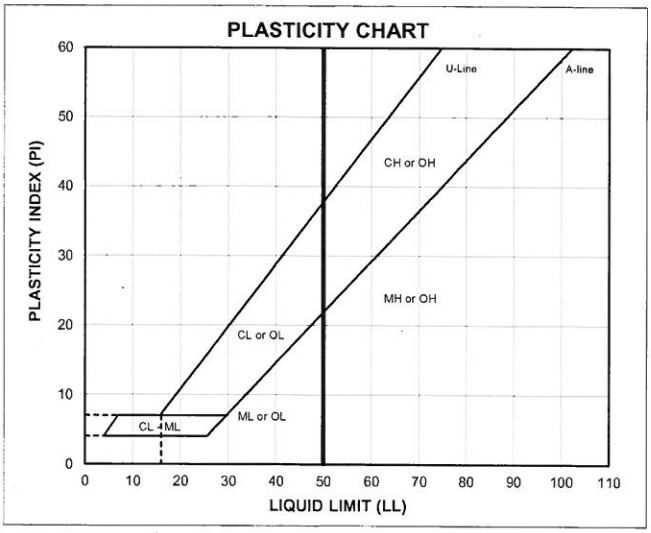

ATTERBERG LIMITS
Method -B (Dry preparation)

M_c	LL	PL	PI	LI
10.3				

LL (oven-dried) / < 0.75 - ORGANIC (OL/OH)

DESCRIPTION: gravelly SAND and SILTY CLAY, fine to coarse, fine to coarse gravel; reddish brown.

USCS: (SC)

TECH	TW/AL
DATE	10/6/15
CHECK	
REVIEW	
APPROVE	

PARTICLE SIZE DISTRIBUTION & ATTERBERG LIMITS

ASTM D421, D422, D4318

PROJECT NAME: **SOLUTIA/OU-3 RA COVER CQA/AL**
SAMPLE ID: **CS PCB CSPS-06** Depth: **0.5-1.5'**
TYPE: **Bag**

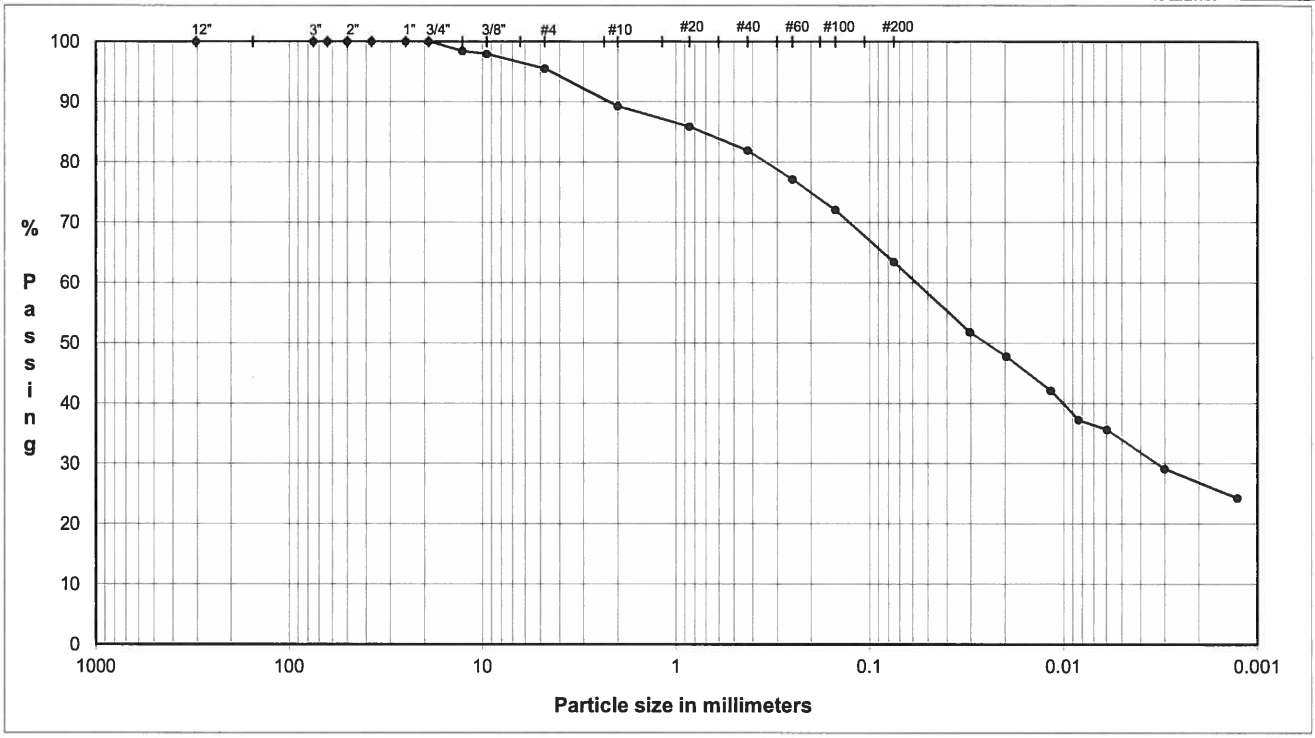

COBBLES	Coarse	Fine	Coarse	Medium	Fine	Silt or Clay
	GRAVEL		SAND			FINES

U.S. Standard Sieves Sizes and Numbers

	Particle Size (mm)	% Passing	Particle Size Classification	Percentage
12.0"	304.8	100.0		
3.0"	75.0	100.0	Cobbles	0.0
2.5"	63.5	100.0		
2.0"	50.0	100.0		
1.5"	37.5	100.0		
1.0"	25.0	100.0		
0.75"	19.0	100.0	Coarse Gravel	0.0
0.50"	12.7	98.4		
0.375"	9.5	97.9		
#4	4.8	95.5	Fine Gravel	4.5
#10	2.00	89.2	Coarse Sand	6.2
#20	0.85	85.9		
#40	0.43	81.9	Medium Sand	7.3
#60	0.25	77.1		
#100	0.15	72.0		
#200	0.075	63.4	Fine Sand	18.5

Hydrometer Analysis

(mm)	%Finer		
0.030	51.8		
0.020	47.7		
0.012	42.1	Fines	
0.0084	37.2	Silt or Clay	63.4
0.0060	35.6		
0.0030	29.1		
0.0013	24.3		

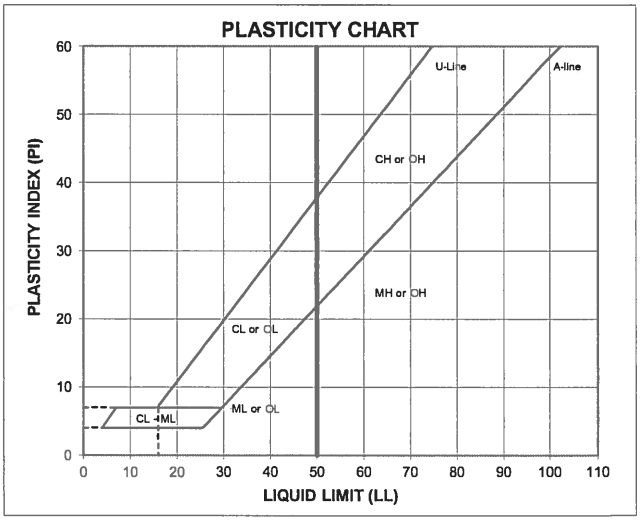

ATTERBERG LIMITS

Method -B (Dry preparation)

M_r	LL	PL	PI	LI
21.5				

LL (oven-dried) / 0.75 = ORGANIC (OL/OH)

DESCRIPTION: sandy SILTY CLAY, fine to coarse, trace fine gravel; reddish brown.

USCS: (CL)

TECH	TJ/AM
DATE	2/11/16
CHECK	
REVIEW	
APPROVE	

PARTICLE SIZE DISTRIBUTION & ATTERBERG LIMITS

ASTM D421, D422, D4318

PROJECT NAME: **SOLUTIA/OU-3 RA COVER CQA/AL**
SAMPLE ID: **CS PCB CSPS-08** Depth: **0.5-1.5'**
TYPE: **Bag**

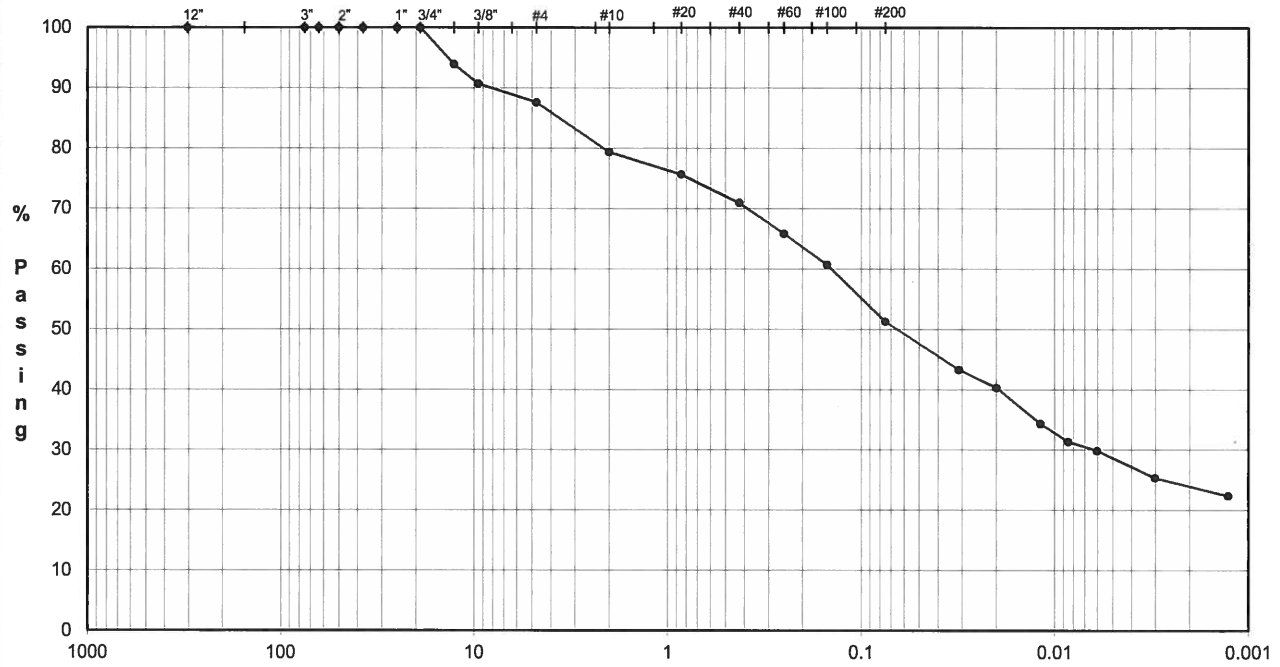

COBBLES	GRAVEL		SAND			FINES
	Coarse	Fine	Coarse	Medium	Fine	Silt or Clay

U.S. Standard Sieves Sizes and Numbers

	Particle Size (mm)	% Passing	Particle Size Classification	Percentage
12.0"	304.8	100.0		
3.0"	75.0	100.0	Cobbles	0.0
2.5"	63.5	100.0		
2.0"	50.0	100.0		
1.5"	37.5	100.0		
1.0"	25.0	100.0		
0.75"	19.0	100.0	Coarse Gravel	0.0
0.50"	12.7	93.9		
0.375"	9.5	90.7		
#4	4.8	87.6	Fine Gravel	12.4
#10	2.00	79.4	Coarse Sand	8.3
#20	0.85	75.6		
#40	0.43	70.9	Medium Sand	8.4
#60	0.25	65.8		
#100	0.15	60.7		
#200	0.075	51.3	Fine Sand	19.7

Hydrometer Analysis

(mm)	%Finer		
0.031	43.3		
0.020	40.3		
0.012	34.3	Fines	
0.0085	31.3	Silt or Clay	51.3
0.0060	29.8		
0.0030	25.4		
0.0013	22.4		

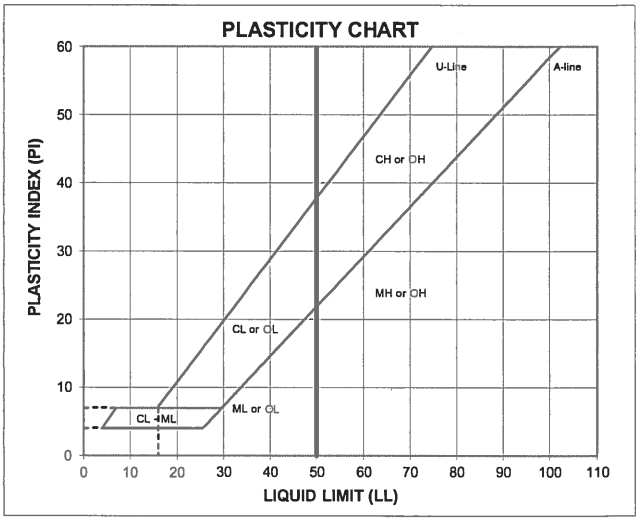

ATTERBERG LIMITS
Method -B (Dry preparation)

M.	LL	PL	PI	LI
19.5				

LL (oven-dried) / 0.75 = ORGANIC (OL/OH)

DESCRIPTION: gravelly SILTY CLAY and SAND, fine to coarse, trace fine gravel; reddish brown.

USCS: (CL)

TECH	TJ/AM
DATE	2/11/16
CHECK	
REVIEW	
APPROVE	

PARTICLE SIZE DISTRIBUTION & ATTERBERG LIMITS

ASTM D421, D422, D4318

PROJECT NAME: **SOLUTIA/OU-3 RA COVER CQA/AL**
SAMPLE ID: **CS PCB CSPS-10** Depth: **0.5-1.5'**
TYPE: **Bag**

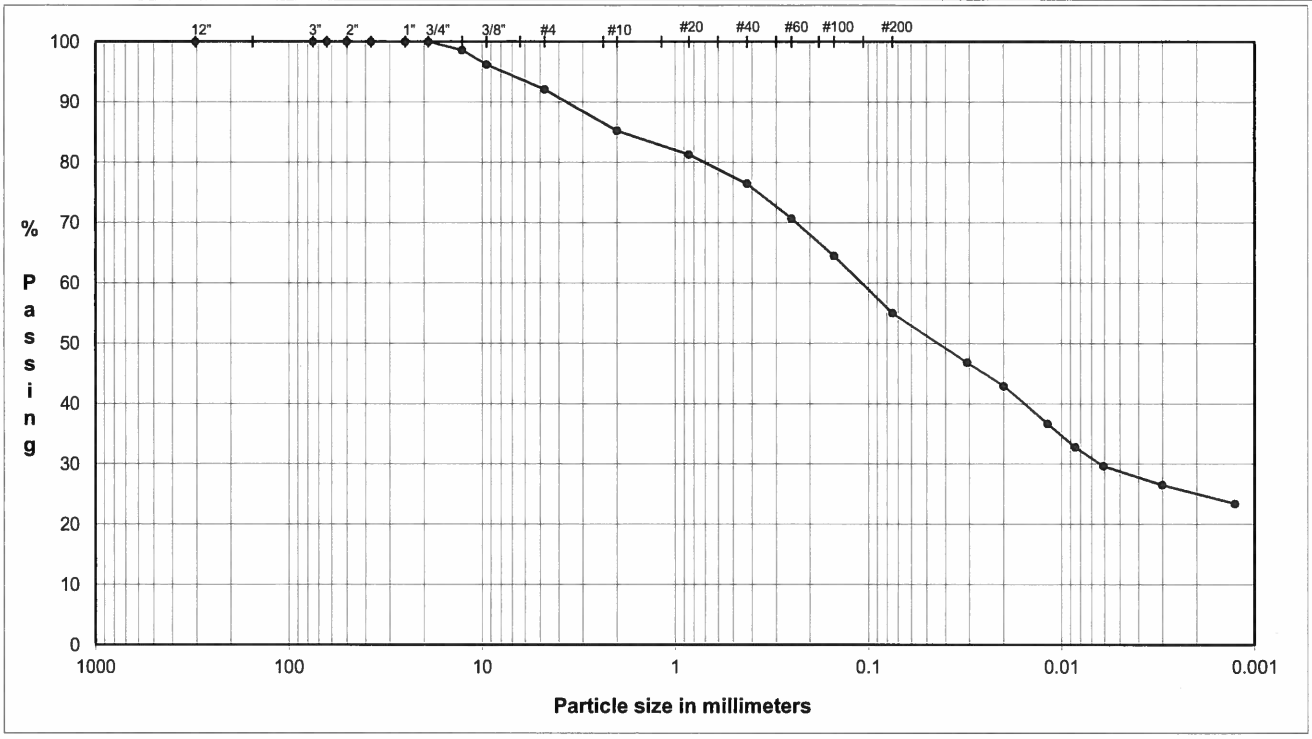

COBBLES	Coarse	Fine	Coarse	Medium	Fine	Silt or Clay
	GRAVEL		SAND			FINES

U.S. Standard Sieves Sizes and Numbers

	Particle Size (mm)	% Passing	Particle Size Classification	Percentage
12.0"	304.8	**100.0**		
3.0"	75.0	**100.0**	Cobbles	**0.0**
2.5"	63.5	**100.0**		
2.0"	50.0	**100.0**		
1.5"	37.5	**100.0**		
1.0"	25.0	**100.0**		
0.75"	19.0	**100.0**	Coarse Gravel	**0.0**
0.50"	12.7	**98.6**		
0.375"	9.5	**96.2**		
#4	4.8	**92.1**	Fine Gravel	**7.9**
#10	2.00	**85.2**	Coarse Sand	**6.9**
#20	0.85	**81.3**		
#40	0.43	**76.5**	Medium Sand	**8.8**
#60	0.25	**70.7**		
#100	0.15	**64.5**		
#200	0.075	**55.0**	Fine Sand	**21.5**

Hydrometer Analysis

(mm)	%Finer		
0.031	**46.8**		
0.020	**42.9**		
0.012	**36.7**	Fines	
0.0085	**32.8**	Silt or Clay	**55.0**
0.0061	**29.6**		
0.0030	**26.5**		
0.0013	**23.4**		

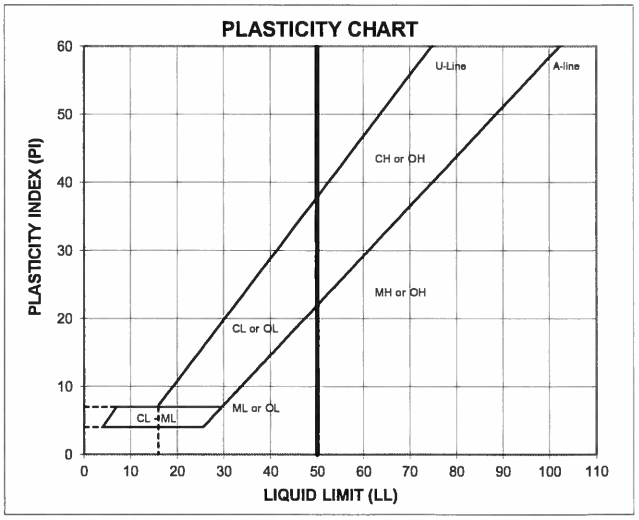

ATTERBERG LIMITS

Method -B (Dry preparation)

M_c	LL	PL	PI	LI
20.5				

LL (oven-dried) / < 0.75 = ORGANIC (OL/OH)

DESCRIPTION: SILTY CLAY and SAND, fine to coarse, some fine gravel; reddish brown.

USCS: (CL)

TECH	TJ/AM
DATE	2/11/16
CHECK	
REVIEW	
APPROVE	

APPENDIX L

TOPSOIL CONFORMANCE TEST RESULTS

SUBMITTAL REVIEW

Date:	7/17/2015	**Golder Ref No.:** **Transmittal No.:**	S1-4
To:	Solutia Inc.	**Project:**	OU-3 RA Cover Systems
Attn:	Mr. Donn Williams – Construction Manager		
From:	Golder Associates Inc.		
Sent Via:	☐ U.S. Mail ☐ Hand Deliver ☐ Federal Express ☒ Electronic Mail		

This submittal review document addresses the following transmittals submitted by Taylor Corporation (Taylor):

SUBMITTAL NO.	REV.	TYPE	DATE	TITLE
S1-4		Product Data	7/17/2015	Topsoil Testing Data

REVIEWER	DATE	REVIEW CODE
Golder Associates Inc.	7/17/2015	REVISE AND RESUBMIT (see comments)

SUBMITTAL TYPES	REVIEW CODES
SHOP DRAWINGS	NO EXCEPTIONS TAKEN
PRODUCT DATA	EXCEPTION AS NOTED
SAMPLE	SUBMIT SPECIFIED ITEM
PLAN	REVISE AND RESUBMIT
DOCUMENT	

Golder's review is only for general compliance with the information given in the Contract Documents. The contractor is responsible for conformances with all requirements of the plans and specifications.

cc: Mr. Michael Price – Supervising Contractor

Golder Associates Inc.
3730 Chamblee Tucker Road
Atlanta, GA 30341 USA
Tel: (770) 496-1893 Fax: (770) 934-9476 www.golder.com

Golder Associates: Operations in Africa, Asia, Australasia, Europe, North America and South America

Golder, Golder Associates and the GA globe design are trademarks of Golder Associates Corporation

Golder Associates Inc. (Golder) has completed our review of the submittal identified on the preceding page, submitted by Taylor Corporation (Taylor) for the OU-3 Remedial Action Cover Systems Project. The submittals were reviewed against the requirements set forth in the Technical Specifications. Golder has the following comments:

Submittal No. S1-4 dated 7/17/2015 :

Taylor Corporation (Taylor) submitted two (2) bulk samples of proposed topsoil material collected from a stockpile at the Oxford Recreation Complex. The material was transported to Atlanta, GA on May 28, 2015 for geotechnical testing by ATC Associates. Samples were tested for grain size distribution, pH, plasticity, and organic content. Results and testing requirements are listed below.

Two composite samples were also collected for chemical screening and results have been summarized and sent to the Environmental Protection Agency (EPA) for approval. Approval from the EPA is pending.

Table 1 – Summary of Topsoil Geotechnical Requirements

Test Description	ASTM Standard	Requirement	Reference
Particle Size	D422	Not contain stones, lumps, roots, or similar objects larger than 1 inch in any dimension	CQAP Table 4.1 Spec 31 00 01 Section 2.4 C 1.
pH	D4972	5.8 to 7.6	CQAP Table 4.1 Spec 31 00 01 Section 2.4 C 2.
Organic Content	D2974	3.0% to 5.0%	CQAP Table 4.1 Spec 31 00 01 Section 2.4 C 3.
USCS Classification	D2488	--	CQAP Table 4.1
USDA Textural Classification	--	Loam, sandy loam, or silty loam	Spec 31 00 01 Section 2.4 B

Table 2 – Summary of Topsoil Geotechnical Testing Results

Sample	Maximum Particle Size (in)	pH	Organic Content (%)	Liquid Limit (%)	Plasticity Index (%)	USCS Classification	USDA Textural Classification
TS-1	**0.4 – 0.2**	**7.2**	**2.06**	**29**	**6**	**ML**	**Loam**
TS-2	**0.4 – 0.2**	**6.3**	**2.29**	**32**	**12**	**CL**	**Silty Loam**

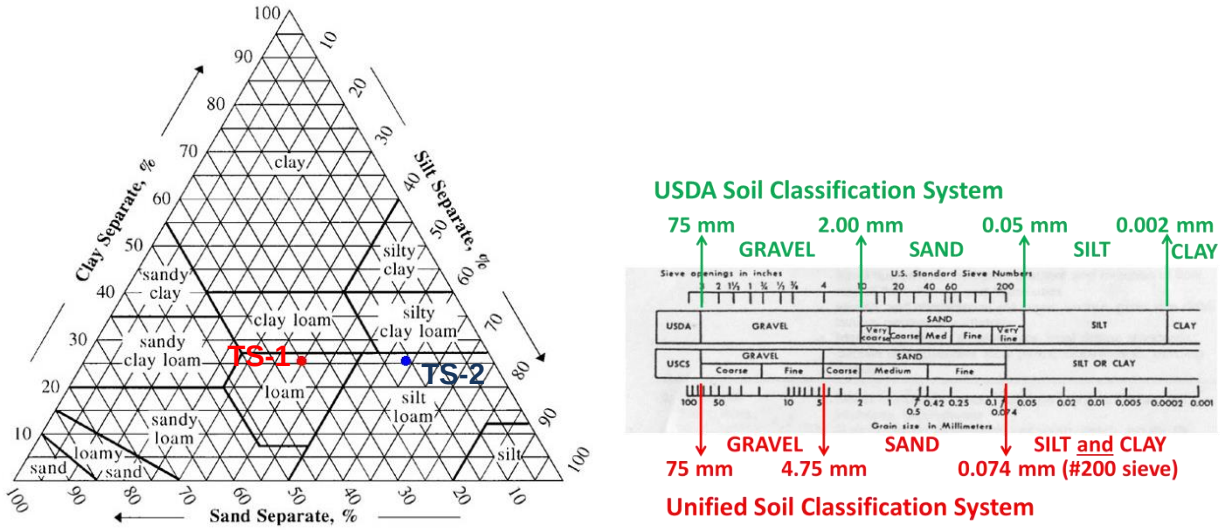

Figure 1 - USDA Textural Classification Chart and Grain Size Definitions

The proposed borrow area soil meets the requirements for soil type, particle size, and pH; however it does not meet the organic content requirements set forth in the Technical Specifications. Golder recommends Taylor submit a plan for increasing the organic content in the topsoil source with the use of an industry-approved amendment process.

GAI Submittal No. S1-4

SUBMITTAL REVIEW

Date: 12/11/2015 **Golder Ref No.:** S1-4.1 (Resubmittal)
Transmittal No.:

To: Solutia Inc. **Project:** OU-3 RA Cover Systems

Attn: Mr. Donn Williams – Construction Manager

From: Golder Associates Inc.

Sent Via: ☐ U.S. Mail ☐ Hand Deliver ☐ Federal Express ☒ Electronic Mail

This submittal review document addresses the following transmittals submitted by Taylor Corporation (Taylor):

SUBMITTAL NO.	REV.	TYPE	DATE	TITLE
S1-4.1		Product Data	12/9/2015	Topsoil Testing Data (Re-Submittal)
S1-4		Product Data	7/17/2015	Topsoil Testing Data

REVIEWER	DATE	REVIEW CODE
Golder Associates Inc.	12/11/2015	NO EXCEPTIONS TAKEN

SUBMITTAL TYPES	REVIEW CODES
SHOP DRAWINGS	NO EXCEPTIONS TAKEN
PRODUCT DATA	EXCEPTION AS NOTED
SAMPLE	SUBMIT SPECIFIED ITEM
PLAN	REVISE AND RESUBMIT
DOCUMENT	

Golder's review is only for general compliance with the information given in the Contract Documents. The contractor is responsible for conformances with all requirements of the plans and specifications.

cc: Mr. Michael Price – Supervising Contractor

Golder Associates Inc.
3730 Chamblee Tucker Road
Atlanta, GA 30341 USA
Tel: (770) 496-1893 Fax: (770) 934-9476 www.golder.com

Golder Associates: Operations in Africa, Asia, Australasia, Europe, North America and South America

Golder, Golder Associates and the GA globe design are trademarks of Golder Associates Corporation

Golder Associates Inc. (Golder) has completed our review of the submittal identified on the preceding page, submitted by Taylor Corporation (Taylor) for the OU-3 Remedial Action Cover Systems Project. The submittals were reviewed against the requirements set forth in the Technical Specifications. Golder has the following comments:

Submittal No. S1-4.1 dated 12/11/2015 :

Taylor Corporation (Taylor) submitted three (3) samples of the proposed topsoil material collected from a stockpile at the Oxford Recreation Complex. The material was transported to Atlanta, GA on December 3, 2015 for geotechnical testing. Samples were tested for pH and organic content. Results and testing requirements are listed below.

The topsoil material is satisfactory for use on the OU-3 Cover Systems Project. Lime soil amendment should be used in conjunction with final seeding to modify soil pH based on seed mix and the Technical Specifications.

Table 1 – Summary of Topsoil Geotechnical Testing Results

Sample	pH	Organic Content (%)
TS-2	5.5	3.8
TS-3	5.8	3.1
TS-4	5.9	3.3

The Technical Specifications require the topsiol material to have a pH between 5.8 and 7.6 and have a minimum organic content of 3 percent by weight and a maximum organic content of 5 percent by weight.

GAI Submittal No. S1-4.1 (Resubmittal)

SOLUTIA/OU-3 RA COVER CQA/AL
SUMMARY OF SOIL DATA

Sample Identification	Sample Type	Sample Depth	Soil Classi-fication	Received Moisture %	Atterberg Limits				Grain Size Distribution			Compaction		pH	LOI %	Unit Weight		Permeability (cm/sec)	Additional Tests Conducted (See Notes)
					L.L.	P.L.	P.I.	L.I.	% Finer No. 4 Sieve	% Finer No. 200 Sieve	% Finer .005 mm	Maximum Dry Density (pcf)	Optimum Moisture %			Moisture %	Dry (pcf)		
TS-2	Bag	-	-	23.4	-	-	-	-	-	-	-	-	-	5.5	3.8	-	-	-	-
TS-3	Bag	-	-	19.0	-	-	-	-	-	-	-	-	-	5.8	3.1	-	-	-	-
TS-4	Bag	-	-	24.0	-	-	-	-	-	-	-	-	-	5.9	3.3	-	-	-	-

ABBREVIATIONS: LIQUID LIMIT (LL)
PLASTIC LIMIT (PL)
PLASTICITY INDEX (PI)
LIQUIDITY INDEX (LI)
SPECIFIC GRAVITY (Gs)
MOISTURE (Mc)

NOTES: T = TRIAXIAL TEST
U = UNCONFINED COMPRESSION TEST
C = CONSOLIDATION TEST
DS = DIRECT SHEAR TEST
LOI = LOSS ON IGNITION

Determining pH of Soil for Use in Corrosion Testing
AASHTO T 289

PROJECT TITLE	SOLUTIA/OU-3 RA COVER CQA/AL	SAMPLE ID	TS-2
PROJECT NO.	1302962-CQA	SAMPLE TYPE	Bag
REMARKS	-	SAMPLE DEPTH	-

SAMPLE PREPARATION

Sieved through the #10 Sieve	YES
Air Dry	YES
Type of Water	DISTILLED

WATER & SOIL

Trial	pH	Temperature
1	5.5	18.6
2	5.5	18.7
3	5.5	18.6
AVERAGE	5.5	18.6

Description	-
USCS	-

TECH	TJ
DATE	12/7/15
CHECK	
REVIEW	
APPROVE	

LOSS ON IGNITION (PERCENT ORGANICS)

ASTM D 2974

Method C

PROJECT TITLE	SOLUTIA/OU-3 RA COVER CQA/AL	SAMPLE ID	TS-2
PROJECT NO.	1302962-CQA	SAMPLE TYPE	Bulk
REMARKS		SAMPLE DEPTH	-

	Received Moisture Content	Hygroscopic Moisture Content
Weight Of Wet Soil & Tare (gm)	232.88	167.39
Weight Of Dry Soil & Tare (gm)	196.79	166.97
Weight of Tare (gm)	42.57	51.58
Weight Of Water In (gm)	36.09	0.42
Weight Of Dry Soil (gm)	154.22	115.39
Moisture Content (%)	23.40	0.36

Weight Of Soil Dry & Crucible	(W1)	50.82	48.46	47.39
Weight After Burning & Crucible	(W2)	49.48	47.19	46.14
Weight Of Crucible	(W3)	19.14	17.61	16.58
Weight Of Soil Dry	(W4 = W1-W3)/Mc_H	31.57	30.74	30.70
Weight After Burning	(W5 = W2-W3)	30.34	29.58	29.56
Weight Lost	(W6=W4-W5)	1.23	1.16	1.14
Ash Percent	W7 = (W5/W4)*100	96.1%	96.2%	96.3%
Loss on Ignition (LOI)(Organics Percent (%)	(W8 = 100-W7)	3.9%	3.8%	3.7%

LOSS ON IGNITION (%) = **3.8%**

Description -

USCS -

TECH	AL/TJ
DATE	12/4/15
CHECK	
REVIEW	
APPROVE	

Determining pH of Soil for Use in Corrosion Testing
AASHTO T 289

PROJECT TITLE	SOLUTIA/OU-3 RA COVER CQA/AL	SAMPLE ID	TS-3
PROJECT NO.	1302962-CQA	SAMPLE TYPE	Bag
REMARKS	-	SAMPLE DEPTH	-

SAMPLE PREPARATION

Sieved through the #10 Sieve	YES
Air Dry	YES
Type of Water	DISTILLED

WATER & SOIL

Trial	pH	Temperature
1	5.8	18.7
2	5.9	18.6
3	5.8	18.6
AVERAGE	5.8	18.6

Description -

USCS -

TECH	TJ
DATE	12/7/15
CHECK	
REVIEW	
APPROVE	

LOSS ON IGNITION (PERCENT ORGANICS)

ASTM D 2974

Method C

PROJECT TITLE	**SOLUTIA/OU-3 RA COVER CQA/AL**	**SAMPLE ID**	**TS-3**
PROJECT NO.	**1302962-CQA**	**SAMPLE TYPE**	**Bulk**
REMARKS		**SAMPLE DEPTH**	-

	Received Moisture Content	Hygroscopic Moisture Content
Weight Of Wet Soil & Tare (gm)	229.60	155.04
Weight Of Dry Soil & Tare (gm)	199.59	154.68
Weight of Tare (gm)	41.29	51.71
Weight Of Water In (gm)	30.01	0.36
Weight Of Dry Soil (gm)	158.30	102.97
Moisture Content (%)	18.96	0.35

Weight Of Soil Dry & Crucible	(W1)	48.61	48.74	52.86
Weight After Burning & Crucible	(W2)	47.55	47.66	51.77
Weight Of Crucible	(W3)	17.62	17.15	21.97
Weight Of Soil Dry	(W4 = W1-W3)/Mc_H	30.88	31.48	30.78
Weight After Burning	(W5 = W2-W3)	29.93	30.51	29.80
Weight Lost	(W6=W4-W5)	0.95	0.97	0.98
Ash Percent	W7 = (W5/W4)*100	96.9%	96.9%	96.8%
Loss on Ignition (LOI)(Organics Percent (%)	(W8 = 100-W7)	3.1%	3.1%	3.2%

LOSS ON IGNITION (%) = **3.1%**

Description -

USCS -

TECH	**AL/TJ**
DATE	**12/4/15**
CHECK	
REVIEW	
APPROVE	

Determining pH of Soil for Use in Corrosion Testing
AASHTO T 289

PROJECT TITLE	SOLUTIA/OU-3 RA COVER CQA/AL	SAMPLE ID	TS-4
PROJECT NO.	1302962-CQA	SAMPLE TYPE	Bag
REMARKS	-	SAMPLE DEPTH	-

SAMPLE PREPARATION

Sieved through the #10 Sieve	YES
Air Dry	YES
Type of Water	DISTILLED

WATER & SOIL

Trial	pH	Temperature
1	5.9	18.4
2	5.9	18.3
3	5.8	18.2
AVERAGE	5.9	18.3

Description -

USCS -

TECH	TJ
DATE	12/7/15
CHECK	
REVIEW	
APPROVE	

LOSS ON IGNITION (PERCENT ORGANICS)

ASTM D 2974

Method C

PROJECT TITLE	SOLUTIA/OU-3 RA COVER CQA/AL	SAMPLE ID	TS-4
PROJECT NO.	1302962-CQA	SAMPLE TYPE	Bulk
REMARKS		SAMPLE DEPTH	-

	Received Moisture Content	Hygroscopic Moisture Content
Weight Of Wet Soil & Tare (gm)	324.50	177.06
Weight Of Dry Soil & Tare (gm)	271.64	176.64
Weight of Tare (gm)	51.38	51.87
Weight Of Water In (gm)	52.86	0.42
Weight Of Dry Soil (gm)	220.26	124.77
Moisture Content (%)	24.00	0.34

Weight Of Soil Dry & Crucible	(W1)	49.83	48.49	49.17
Weight After Burning & Crucible	(W2)	48.68	47.40	48.04
Weight Of Crucible	(W3)	18.27	17.56	18.69
Weight Of Soil Dry	(W4 = W1-W3)/Mc_H	31.45	30.83	30.38
Weight After Burning	(W5 = W2-W3)	30.41	29.84	29.35
Weight Lost	(W6=W4-W5)	1.04	0.99	1.03
Ash Percent	W7 = (W5/W4)*100	96.7%	96.8%	96.6%
Loss on Ignition (LOI)(Organics Percent (%)	(W8 = 100-W7)	3.3%	3.2%	3.4%

LOSS ON IGNITION (%) = **3.3%**

Description -

USCS -

TECH	AL/TJ
DATE	12/4/15
CHECK	
REVIEW	
APPROVE	

APPENDIX M

DGA CONFORMANCE TEST RESULTS

SOLUTIA/OU-3 RA COVER CQA/AL
SUMMARY OF DATA

Sample Identification	Sample Type	Sample Depth	Soil Classi-fication	Natural Moisture %	Atterberg Limits				Grain Size Distribution			Compaction		Gs	Unit Weight		Permeability (cm/sec)	Additional Tests Conducted (See Notes)
					L.L.	P.L.	P.I.	L.I.	% Finer No. 4 Sieve	% Finer No. 200 Sieve	% Finer .005 mm	Maximum Dry Density (lb/cuft)	Optimum Moisture %		Moisture %	Dry (lb/cuft)		
7/22/2015 CMT BORROW	Bulk	5.0'	CL	11.7	31	21	10	-0.89	91.3	59.8	33.5	110.8	16.8	-	-	-	-	-
VULCAN DGA	Bulk	-	SW	2.7	-	-	-	-	55.4	4.7	-	144.3	5.3	-	-	-	-	-

ABBREVIATIONS: LIQUID LIMIT (LL)
PLASTIC LIMIT (PL)
PLASTICITY INDEX (PI)
LIQUIDITY INDEX (LI)
SPECIFIC GRAVITY (Gs)
MOISTURE (Mc)

NOTES: T = TRIAXIAL TEST
U = UNCONFINED COMPRESSION TEST
C = CONSOLIDATION TEST
DS = DIRECT SHEAR TEST
O = ORGANIC CONTENT
P = pH

Figure 1: Gradation Curves - DGA

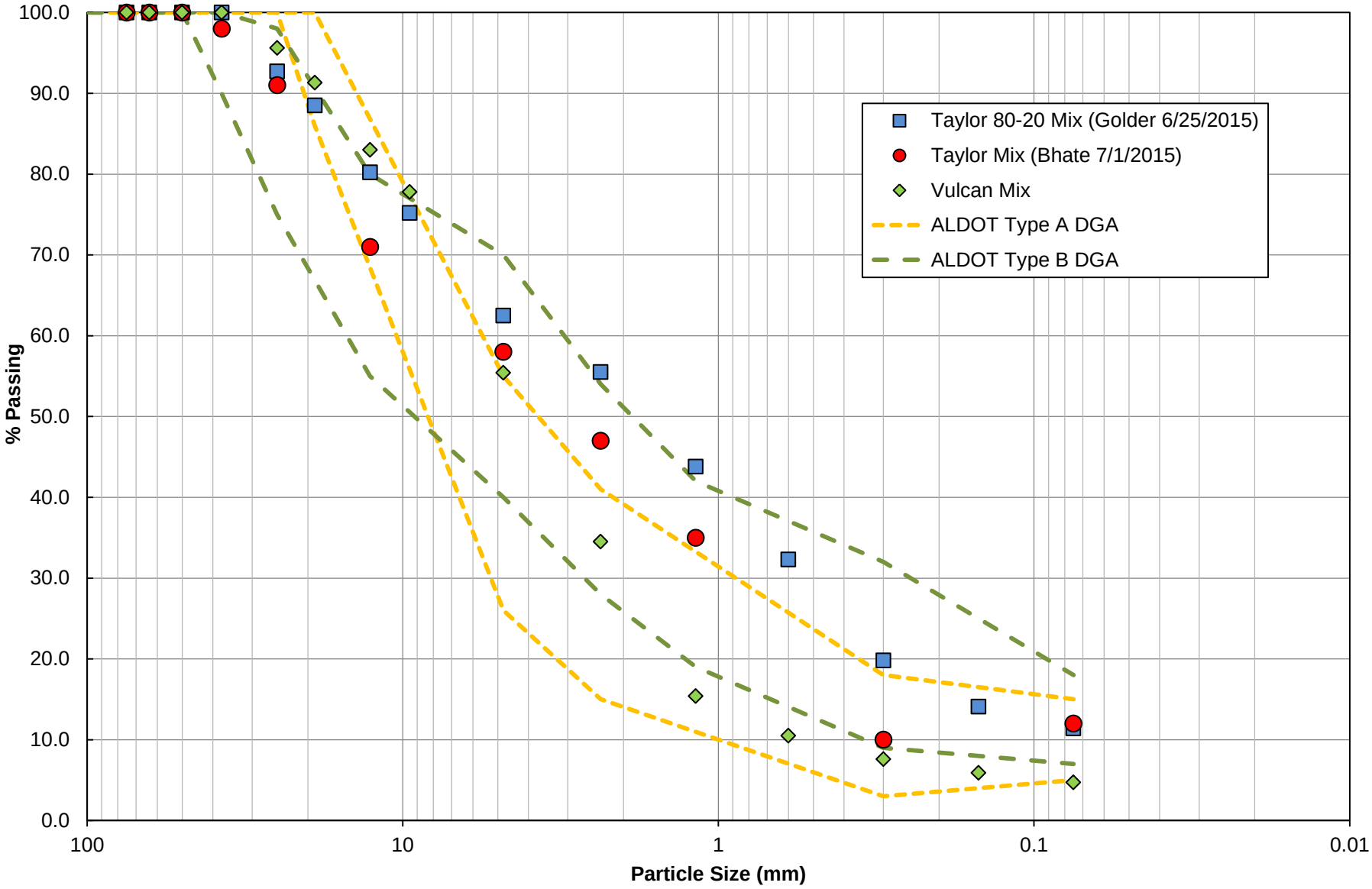

File: DGA Particle Size Curves.xlsx
Tab: DGA_Gradation

Golder Associates

PARTICLE SIZE DISTRIBUTION

ASTM C117, C136

PROJECT NAME: **SOLUTIA/OU-3 RA COVER CQA/AL**
SAMPLE ID: **VULCAN DGA** - Depth: -
TYPE: **Bulk**

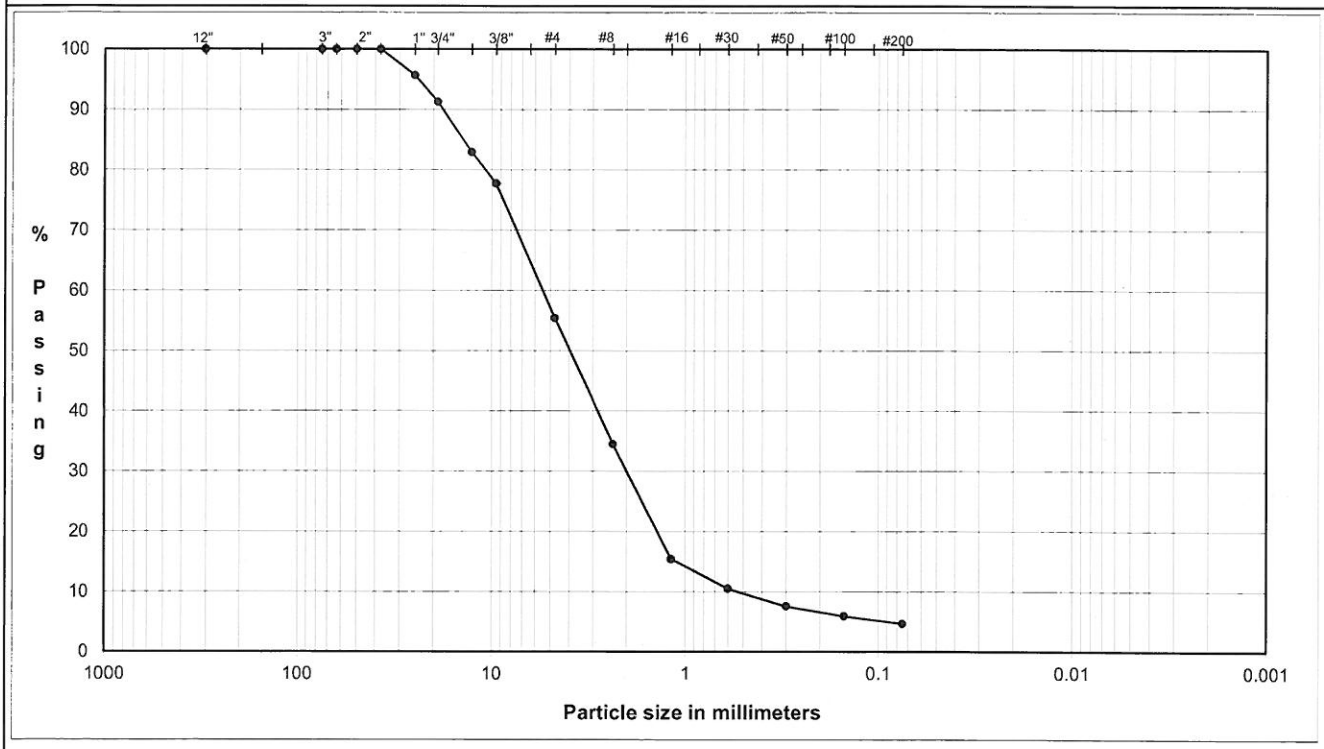

	Coarse	Fine	Coarse	Medium	Fine	Silt or Clay
COBBLES	GRAVEL		SAND			FINES

U.S. Standard Sieves Sizes and Numbers

	Particle Size (mm)	% Passing	Particle Size Classification	Particle Size Percentage
12.0"	304.8	**100.0**		
3.0"	75	**100.0**	Cobbles	**0.0**
2.5"	63.5	**100.0**		
2.0"	50	**100.0**		
1.5"	37.5	**100.0**		
1.0"	25	**95.6**		
0.75"	19	**91.3**	Coarse Gravel	**8.7**
0.50"	12.7	**83.0**		
0.375"	9.5	**77.8**		
#4	4.75	**55.4**	Fine Gravel	**35.8**
#8	2.36	**34.5**	Coarse Sand	**25.5**
#16	1.18	**15.4**		
#30	0.60	**10.5**	Medium Sand	**20.9**
#50	0.30	**7.6**		
#100	0.15	**5.9**		
#200	0.075	**4.7**	Fine Sand	**4.4**
			Fines	**4.7**

D_{60}= 5.5	D_{30}= 2.0	D_{10}= 0.5
Cu = D60/D10 =	**10.2**	> 6
Cc = D30^2 (D10*D60) =	**1.4**	> 1

DESCRIPTION: SAND and GRAVEL, fine to coarse, fine to coarse gravel, trace fines; light gray.

USCS: SW

M_c 2.7%

TECH	TJ/MD
DATE	7/30/15
CHECK	AL
REVIEW	8/11/15
APPROVE	

MOISTURE / DRY DENSITY CURVE
ASTM D 1557 Method B

Mechanical	Modified	Moist Method

PROJECT NAME: SOLUTIA/OU-3 RA COVER CQA/AL
PROJECT NUMBER: 1302962-CQA
SAMPLE ID: VULCAN DGA DEPTH: SAMPLE TYPE: Bulk

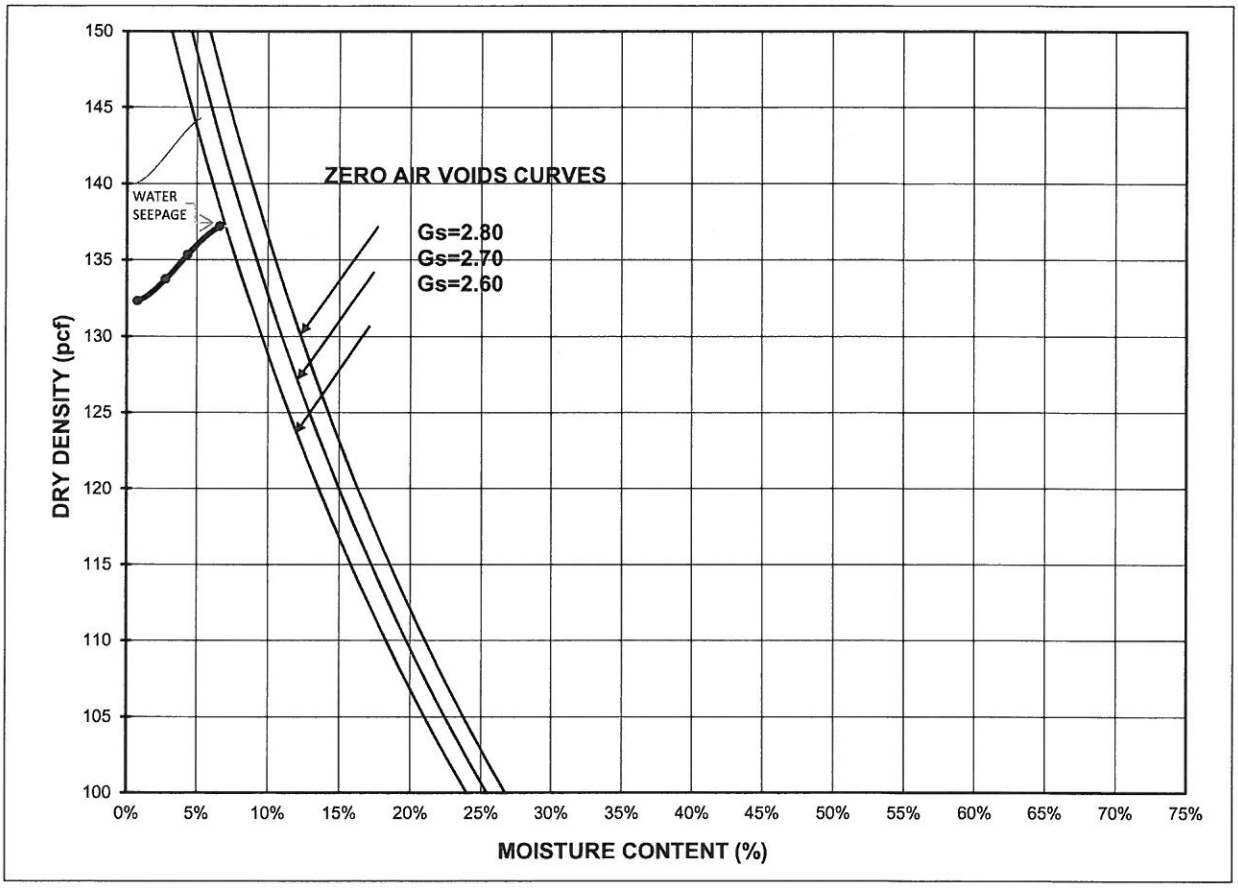

COMPACTION POINTS		
Specimen Number	Dry Density (pcf)	Moisture Content (%)
1	132.3	0.7%
2	133.7	2.7%
3	135.3	4.3%
4	137.2	6.6%

Maximum Dry Density (pcf)	137.2
Optimum Moisture (%)	6.6
Corrected Maximum Dry Density (pcf)	144.3
Corrected Optimum Moisture (%)	5.3
As-Received Moisture Content	2.6%

NOTE: *Beyond the Upper Percentage Limits for D 4718*

% Retained on # 4 sieve	44.6%
% Retained on 3/8" sieve	22.2%
% Retained on 3/4" sieve	

DESCRIPTION SAND and GRAVEL, fine to coarse, fine to coarse gravel, trace fines; light gray.

USCS SW

CHECK AK
REVIEW [illegible]
APPROVE

Vulcan Materials Company

Gradation Test Report

Plant 4342-Ohatchee
Product 14081-ALDOT 825 B
Specification ALDOT 825 B

1763756635

Sample Information

Sample No 1763756635
Date Sampled 04/10/2015 14:48
Sampled By Josh Graham
Type Shipping
Method Loader Bucket Blend
Location
Process
Ledge
Other
Weather
Temp

Split Sample ☐
Resample ☐
Lot / Sublot
Quad / Quantity

Sequence
Code

Test Note

Gradation Results

Date Completed 04/10/2015 14:48
Tested By Josh Graham

Unit	Moist Mass	Dry Mass	Wash Mass	Moisture %	Wash Loss %	Procedure
kg		10.27	9.31		9.3	

Sieve	Mass Retained	Cum Mass Retained	Ind % Retained	% Retained	% Passing	Target	Specification	Comment
2" (50mm)	0.0	0.0	0.0	0.0	100.0		100-100	
1 1/2" (37.5mm)	0.1	0.1	1.1	1.1	98.9		90-100	
1" (25mm)	2.0	2.2	19.9	20.9	79.1		75-98	
1/2" (12.5mm)	1.5	3.7	14.7	35.7	64.3		55-80	
#4 (4.75mm)	1.6	5.2	15.2	50.9	49.1		40-70	
#8 (2.36mm)	1.2	6.4	11.8	62.6	37.4		28-54	
#16 (1.18mm)	1.2	7.6	11.8	74.5	25.5		19-42	
#50 (0.3mm)	1.1	8.7	10.8	85.2	14.8		9-32	
#200 (75um)	0.5	9.3	5.20	90.42	9.58		7-18	
Pan	0.0	9.3	9.58	100.00	0.00			

SOLUTIA/OU-3 RA COVER CQA/AL
SUMMARY OF AGGREGATE DATA

Sample Identification	Sample Type	Classi-fication	Grain Size Distribution			Unit Weight		Permeability (cm/sec)	LA Abrasion		Soundness		Specific Gravity			Carbonate Content	Bulk Density	Additional Tests Conducted
			% Finer 1.5" Sieve	% Finer No. 4 Sieve	% Finer No. 200 Sieve	Moisture %	Dry (lb/cuft)		Coarse Loss %	Fine Loss %	Coarse Total Loss %	Fine Total Loss %	+4	-4	Avg.	%	(pcf)	(See Notes)
REC FIELD 80-20 DCA	Bulk	(SW-SM)	100.0	62.5	11.4	-	-	-	-	-	-	-	-	-	-	-	-	-
80/20 MIX-01	Bulk	-	-	-	-	-	-	-	-	39	1	2	-	-	-	-	-	-

ABBREVIATIONS:

NOTES: ASR = ALKALI-SILICA REACTIVITY
OI = ORGANIC IMPURITIES
FP = CLAY LUMPS AND FRIABLE PARTICLES
PS = PARTICLE SHAPE

PARTICLE SIZE DISTRIBUTION

ASTM C117, C136

PROJECT NAME: **SOLUTIA/OU-3 RA COVER CQA/AL**
SAMPLE ID: **REC FIELD 80-20 DCA** Depth: -
TYPE: **Bulk**

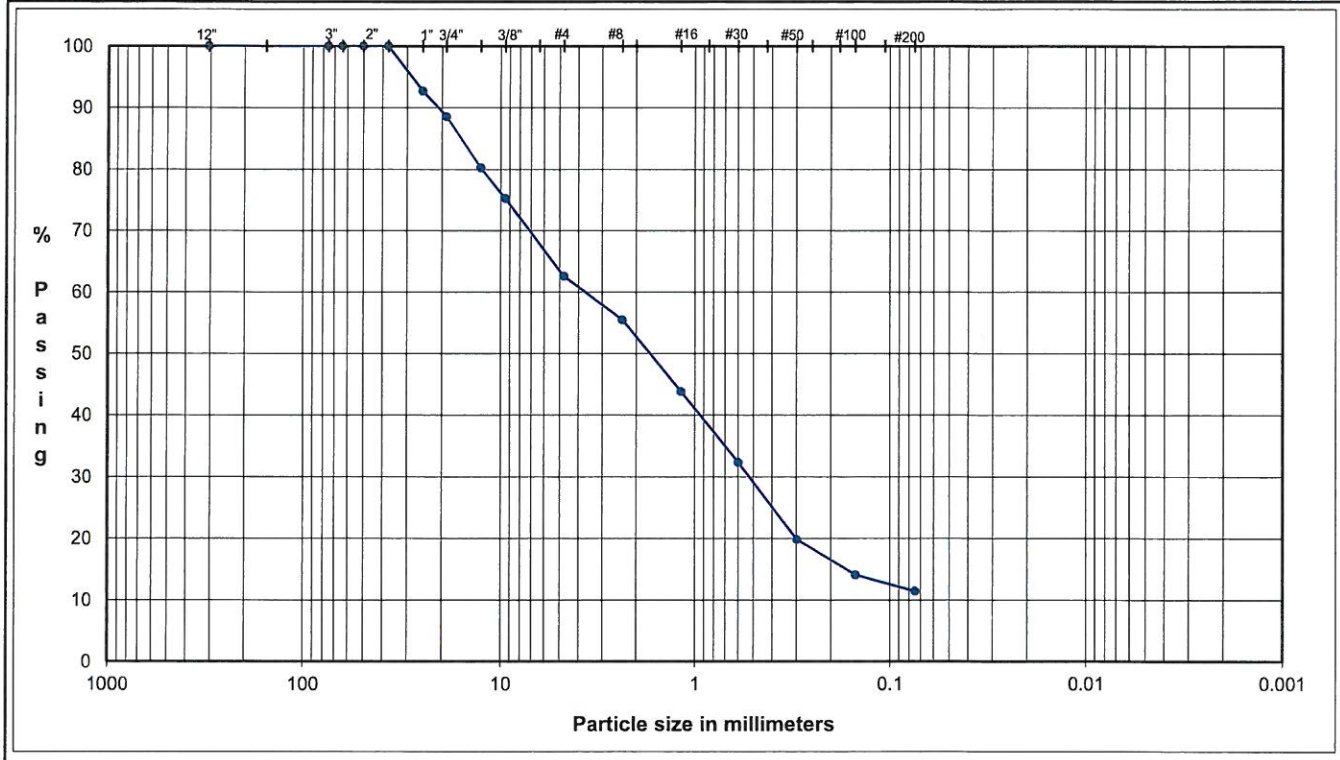

	Coarse	Fine	Coarse	Medium	Fine	Silt or Clay
COBBLES	GRAVEL		SAND			FINES

U.S. Standard Sieves Sizes and Numbers

	Particle Size (mm)	% Passing	Particle Size Classification	Percentage
12.0"	304.8	**100.0**		
3.0"	75	**100.0**	Cobbles	**0.0**
2.5"	63.5	**100.0**		
2.0"	50	**100.0**		
1.5"	37.5	**100.0**		
1.0"	25	**92.7**		
0.75"	19	**88.5**	Coarse Gravel	**11.5**
0.50"	12.7	**80.2**		
0.375"	9.5	**75.2**		
#4	4.75	**62.5**	Fine Gravel	**26.0**
#8	2.36	**55.5**	Coarse Sand	**9.9**
#16	1.18	**43.8**		
#30	0.60	**32.3**	Medium Sand	**26.6**
#50	0.30	**19.8**		
#100	0.15	**14.1**		
#200	0.075	**11.4**	Fine Sand	**14.6**
			Fines	**11.4**

D_{60}= 3.7	D_{30}= 0.53	D_{10}= 0.05
Cu = D60/D10 =	**73.9**	> 6
Cc = D30^2/(D10*D60) =	**1.5**	> 1

DESCRIPTION: SAND and GRAVEL, fine to coarse sand, fine to coarse gravel, some fines; light brown.

USCS: (SW-SM)

M_c 7.6%

TECH	TJ/DA
DATE	6/26/15
CHECK	DA
REVIEW	PWM
APPROVE	

JULY 2015 1302962-CQA

L.A. ABRASION

ASTM C 131 / C 535

PROJECT NAME: SOLUTIA/OU-3 RA COVER CQA/AL
SAMPLE ID: 80/20 MIX-01
SAMPLE TYPE: Bulk

LARGE-SIZE COARSE AGGREGATE (>3/4") (C 535)

Grading Schedule:

Sieve Size (retained) (in)	Initial Mass (g)	Final Mass Retained After Test (g)	Loss by Abrasion (%)
2	-	-	-
1½	-		
Total	-		

SMALL-SIZE COARSE AGGREGATE (<1.5") (C 131)

Grading Schedule: A

Sieve Size (retained) (in)	Initial Mass (g)	Final Mass Retained After Test (g)	Loss by Abrasion (%)
1	1265	3058	39
¾	1249		
½	1250		
⅜	1251		
Total	5015		

Tested By	DA
Date	7/23/15
Check	DA
Review	PWM
Approve	

Notes:

JULY 2015 1302962-CQA

SOUNDNESS OF AGGREGATES

ASTM C88, AASTHO T104

PROJECT NAME: SOLUTIA/OU-3 RA COVER CQA/AL
SAMPLE ID: 80/20 MIX-01
SAMPLE TYPE: Bulk

COARSE FRACTION

Sieve Size (in)	Initial Weight (g)	Tested Fractions (in)	Grading of Original Sample (%)	Initial Weight of Test Fractions (g)	Percentage Passing Designated Sieve After Test	Weighted Loss (%)
2 1/2 to 2	-	2 1/2 to 1 1/2	-	-	-	-
2 to 1 1/2	-					
1 1/2 to 1	1008	1 1/2 to 3/4	11.5	1508	1.3%	0.2
1 to 3/4	500					
3/4 to 1/2	678	3/4 to 3/8	13.3	1009	1.0%	0.1
1/2 to 3/8	331					
3/8 to No. 4	301	3/8 to #4	12.6	301	3.0%	0.4
		Total	37.4		Total Loss (%)	1

Qualitative Examination of Coarse Sizes (After Test)
Particles Exhibiting Distress

Sieve Size (in)	Total No. Before Test	Splitting (No.)	Crumbling (No.)	Cracking (No.)	Flaking (No.)
2 1/2 to 1 1/2	-	-	-	-	-
1 1/2 to 3/4	50	-	-	-	-

FINE FRACTION

Sieve Size	Grading of Original Sample (%)	Initial Weight of Test Fractions (g)	Percentage Passing Designated Sieve After Test	Weighted Loss (%)
No. 4	12.6	100.1	4.8%	0.6
No. 8	7.1	100.0	5.2%	0.4
No. 16	11.6	100.1	2.3%	0.3
No. 30	11.5	100.0	3.1%	0.4
No. 50	12.5	100.1	6.5%	0.8
Total	55.3		Total Loss (%)	2

Solution Used: Sodium Sulfate
No. of Cycles: 5

Notes:

Tested By	DA/WD
Date	7/22/15
Check	RWM
Review	DA
Approve	

PARTICLE SIZE DISTRIBUTION

ASTM C117, C136

PROJECT NAME: **SOLUTIA/OU-3 RA COVER CQA/AL**
SAMPLE ID: **VDGA-09** - Depth: -
TYPE: **Bulk**

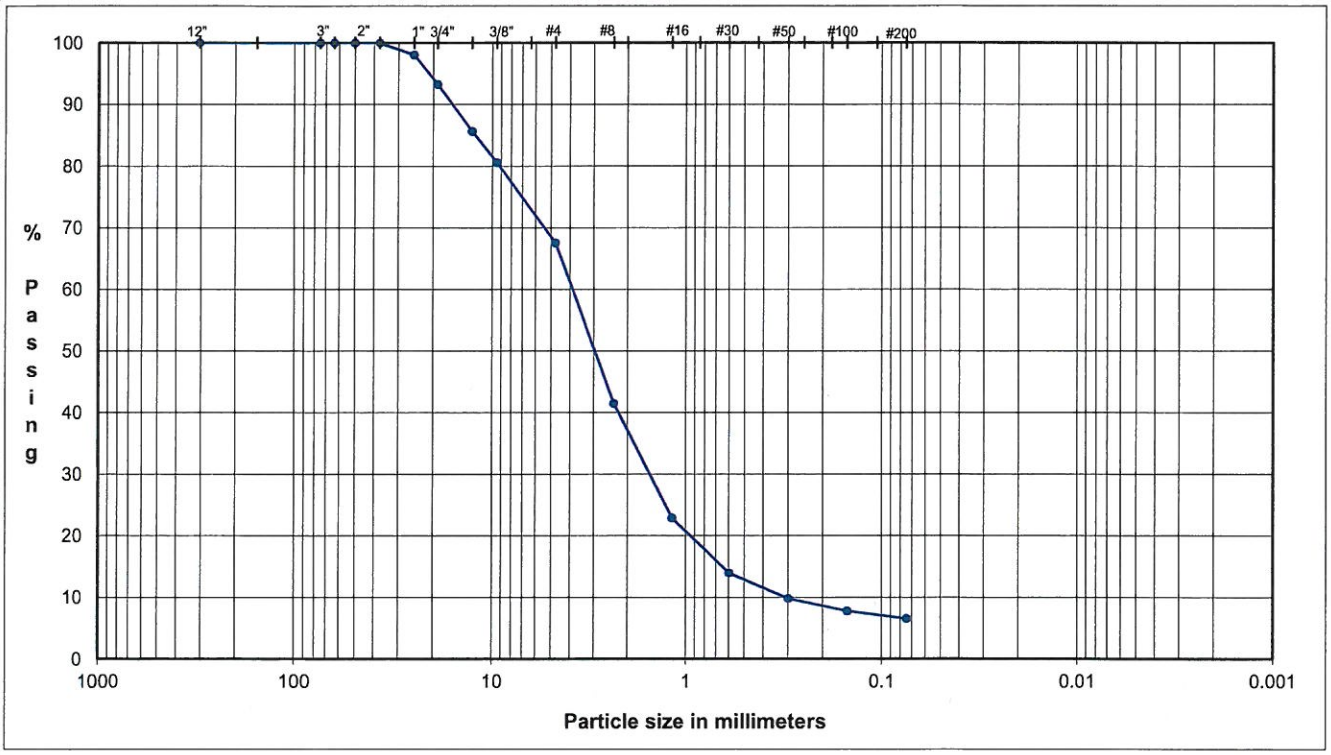

COBBLES	GRAVEL		SAND			FINES
	Coarse	Fine	Coarse	Medium	Fine	Silt or Clay

U.S. Standard Sieves Sizes and Numbers

	Particle Size (mm)	% Passing	Particle Size Classification	Particle Size Percentage
12.0"	304.8	**100.0**		
3.0"	75	**100.0**	Cobbles	**0.0**
2.5"	63.5	**100.0**		
2.0"	50	**100.0**		
1.5"	37.5	**100.0**		
1.0"	25	**98.0**		
0.75"	19	**93.3**	Coarse Gravel	**6.7**
0.50"	12.7	**85.7**		
0.375"	9.5	**80.6**		
#4	4.75	**67.6**	Fine Gravel	**25.7**
#8	2.36	**41.5**	Coarse Sand	**30.5**
#16	1.18	**22.9**		
#30	0.60	**14.0**	Medium Sand	**25.2**
#50	0.30	**9.8**		
#100	0.15	**7.8**		
#200	0.075	**6.5**	Fine Sand	**5.4**
			Fines	**6.5**

D_{60}= 3.9	D_{30}= 1.5	D_{10}= 0.3
Cu = D60/D10 =	**12.6**	> 6
Cc = D30^2/(D10*D60) =	**2.0**	> 1

DESCRIPTION: gravelly SAND, fine to coarse, fine to coarse gravel, some fines; gray.

USCS: (SW-SM)

M_c 3.4%

TECH	CG/WD
DATE	12/30/15
CHECK	CC
REVIEW	DA
APPROVE	

PARTICLE SIZE DISTRIBUTION

ASTM C117, C136

PROJECT NAME: **SOLUTIA/OU-3 RA COVER CQA/AL**
SAMPLE ID: **VDGA-08** Depth: -
TYPE: **Bulk**

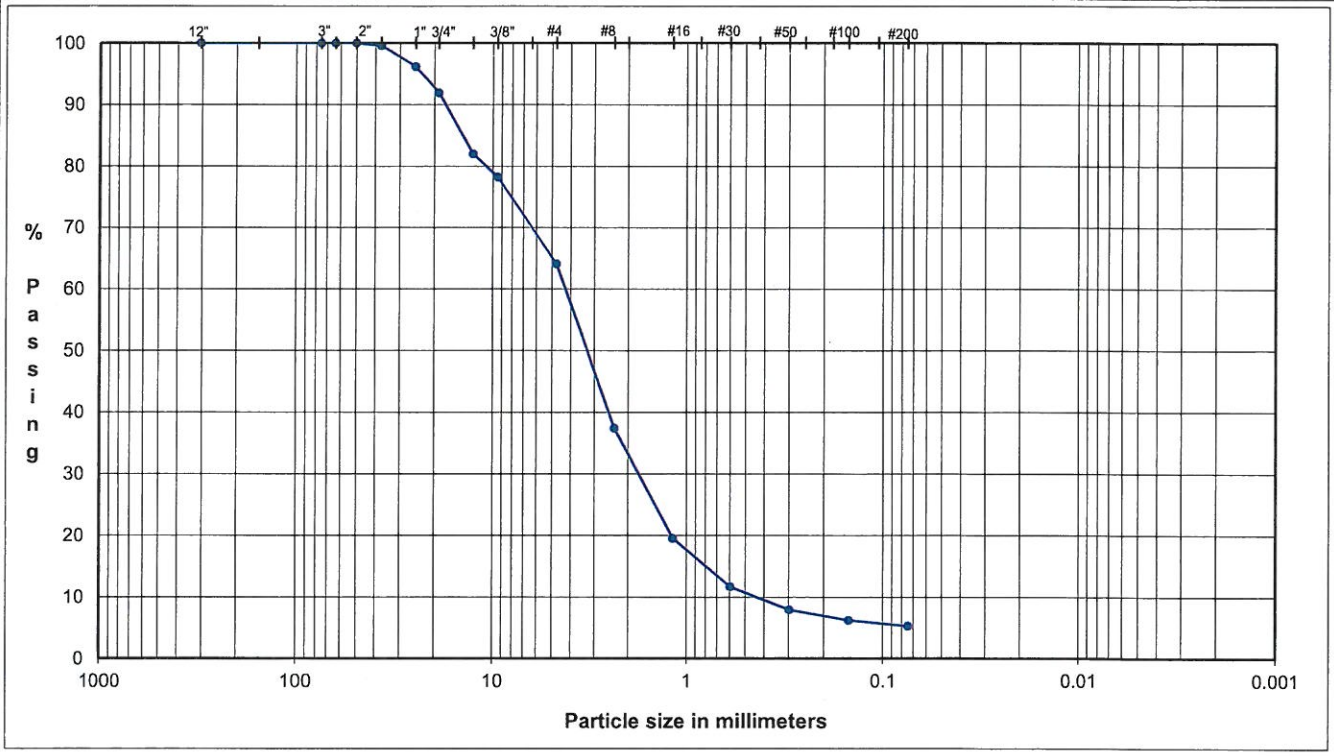

COBBLES	Coarse	Fine	Coarse	Medium	Fine	Silt or Clay
	GRAVEL		SAND			FINES

U.S. Standard Sieves Sizes and Numbers

	Particle Size (mm)	% Passing	Particle Size Classification	Particle Size Percentage
12.0"	304.8	**100.0**		
3.0"	75	**100.0**	Cobbles	**0.0**
2.5"	63.5	**100.0**		
2.0"	50	**100.0**		
1.5"	37.5	**99.6**		
1.0"	25	**96.2**		
0.75"	19	**92.0**	Coarse Gravel	**8.0**
0.50"	12.7	**82.1**		
0.375"	9.5	**78.3**		
#4	4.75	**64.1**	Fine Gravel	**27.8**
#8	2.36	**37.4**	Coarse Sand	**31.0**
#16	1.18	**19.6**		
#30	0.60	**11.8**	Medium Sand	**23.3**
#50	0.30	**8.0**		
#100	0.15	**6.3**		
#200	0.075	**5.4**	Fine Sand	**4.5**
			Fines	**5.4**

D_{60}= 4.3	D_{30}= 1.77	D_{10}= 0.43
Cu = D60/D10 =	**9.8**	> 6
Cc = D30^2/(D10*D60) =	**1.7**	> 1

DESCRIPTION: SAND and GRAVEL, fine to coarse, fine to coarse gravel, some fines; gray.

USCS: (SW-SM)

M_c 1.7%

TECH	TJ
DATE	11/30/15
CHECK	
REVIEW	PWM
APPROVE	

PARTICLE SIZE DISTRIBUTION

ASTM C117, C136

PROJECT NAME: **SOLUTIA/OU-3 RA COVER CQA/AL**
SAMPLE ID: **VDGA-07** Depth: -
TYPE: **Bulk**

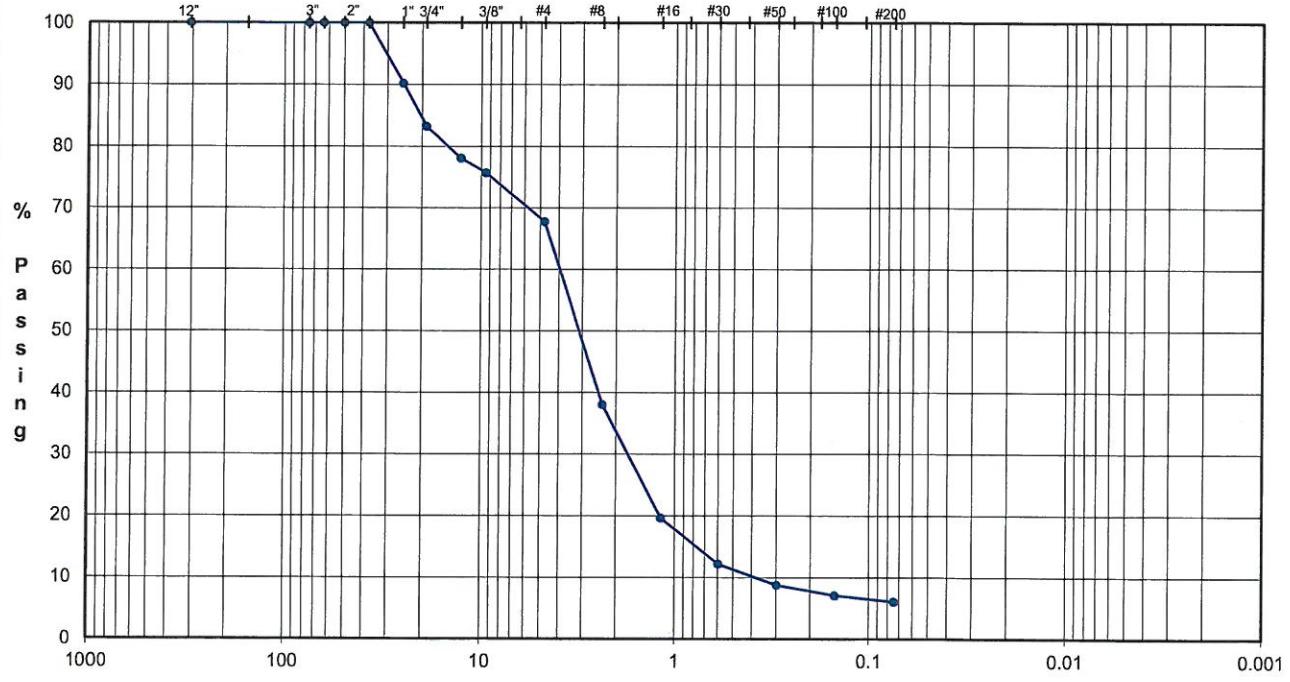

	Coarse	Fine	Coarse	Medium	Fine	Silt or Clay
COBBLES	GRAVEL		SAND			FINES

U.S. Standard Sieves Sizes and Numbers

	Particle Size (mm)	% Passing	Particle Size Classification	Percentage
12.0"	304.8	**100.0**		
3.0"	75	**100.0**	Cobbles	**0.0**
2.5"	63.5	**100.0**		
2.0"	50	**100.0**		
1.5"	37.5	**100.0**		
1.0"	25	**90.2**		
0.75"	19	**83.2**	Coarse Gravel	**16.8**
0.50"	12.7	**78.0**		
0.375"	9.5	**75.6**		
#4	4.75	**67.7**	Fine Gravel	**15.5**
#8	2.36	**38.0**	Coarse Sand	**34.1**
#16	1.18	**19.6**		
#30	0.60	**12.2**	Medium Sand	**23.2**
#50	0.30	**8.7**		
#100	0.15	**7.1**		
#200	0.075	**6.0**	Fine Sand	**4.4**
			Fines	**6.0**

D_{60}= 4.0	D_{30}= 1.74	D_{10}= 0.39
Cu = D60/D10 =	**10.2**	> 6
Cc = D30^2/(D10*D60) =	**2.0**	> 1

DESCRIPTION: gravelly SAND, fine to coarse, fine to coarse gravel, some fines; gray.

USCS: (SW-SM)

M_c 13.2%

TECH	TJ
DATE	11/16/15
CHECK	PA
REVIEW	JWM
APPROVE	

PARTICLE SIZE DISTRIBUTION

ASTM C117, C136

PROJECT NAME: **SOLUTIA/OU-3 RA COVER CQA/AL**
SAMPLE ID: **VDGA-06** Depth: -
TYPE: **Bulk**

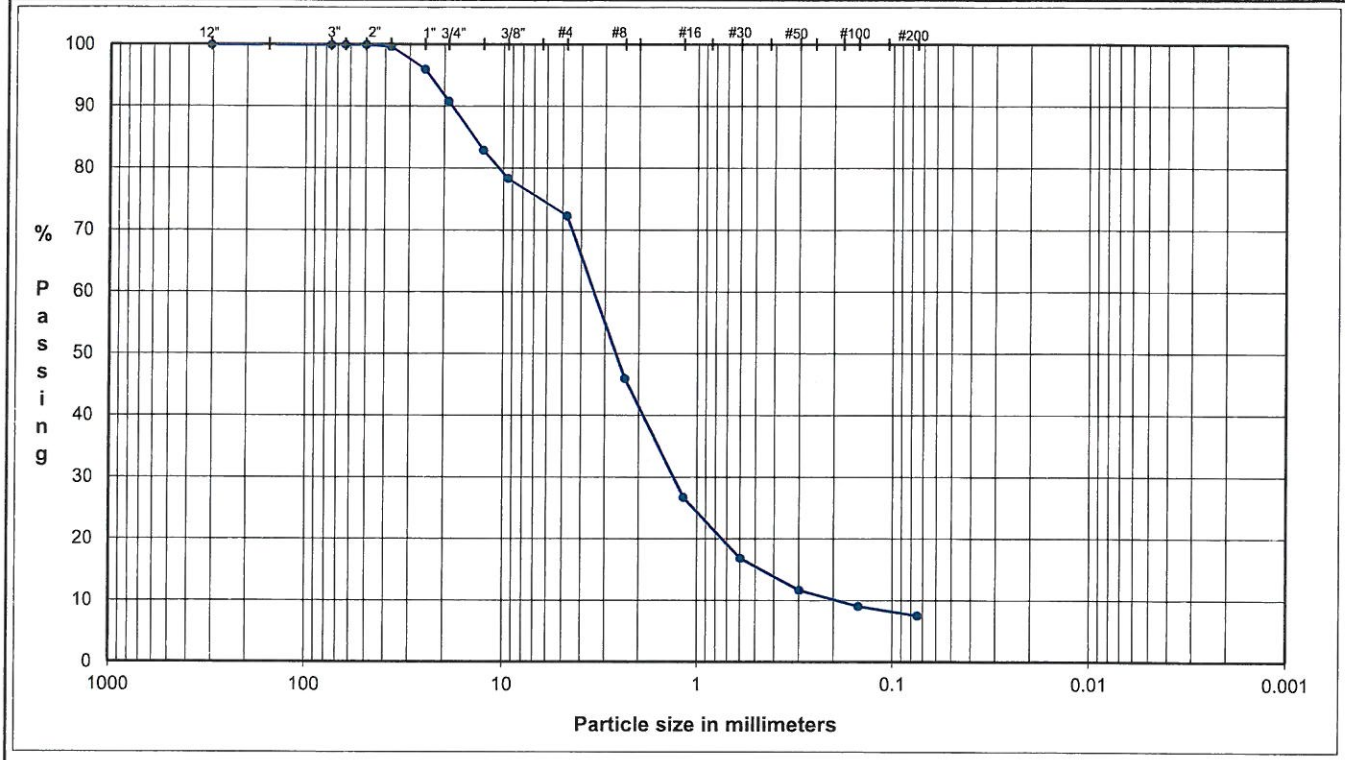

	Coarse	Fine	Coarse	Medium	Fine	Silt or Clay
COBBLES	GRAVEL		SAND			FINES

U.S. Standard Sieves Sizes and Numbers

	Particle Size (mm)	% Passing	Particle Size Classification	Percentage
12.0"	304.8	**100.0**		
3.0"	75	**100.0**	Cobbles	**0.0**
2.5"	63.5	**100.0**		
2.0"	50	**100.0**		
1.5"	37.5	**99.7**		
1.0"	25	**96.0**		
0.75"	19	**90.8**	Coarse Gravel	**9.2**
0.50"	12.7	**82.9**		
0.375"	9.5	**78.4**		
#4	4.75	**72.3**	Fine Gravel	**18.5**
#8	2.36	**46.0**	Coarse Sand	**31.0**
#16	1.18	**26.7**		
#30	0.60	**16.8**	Medium Sand	**27.2**
#50	0.30	**11.6**		
#100	0.15	**9.1**		
#200	0.075	**7.5**	Fine Sand	**6.7**
			Fines	**7.5**

D_{60}= 3.4	D_{30}= 1.33	D_{10}= 0.19
Cu = D60/D10 =	**17.7**	> 6
Cc = D30^2/(D10*D60) =	**2.7**	> 1

DESCRIPTION: SAND and GRAVEL, fine to coarse, fine to coarse gravel, some fines; gray and white.

USCS: SW-SM

M_c 3.6%

TECH	TJ
DATE	11/5/15
CHECK	
REVIEW	
APPROVE	

MOISTURE / DRY DENSITY CURVE
ASTM D 1557 Method B

Mechanical	Modified	Moist Method

PROJECT NAME: SOLUTIA/OU-3 RA COVER CQA/AL
PROJECT NUMBER: 1302962-CQA
SAMPLE ID: VDGA-06 SAMPLE TYPE: Bulk

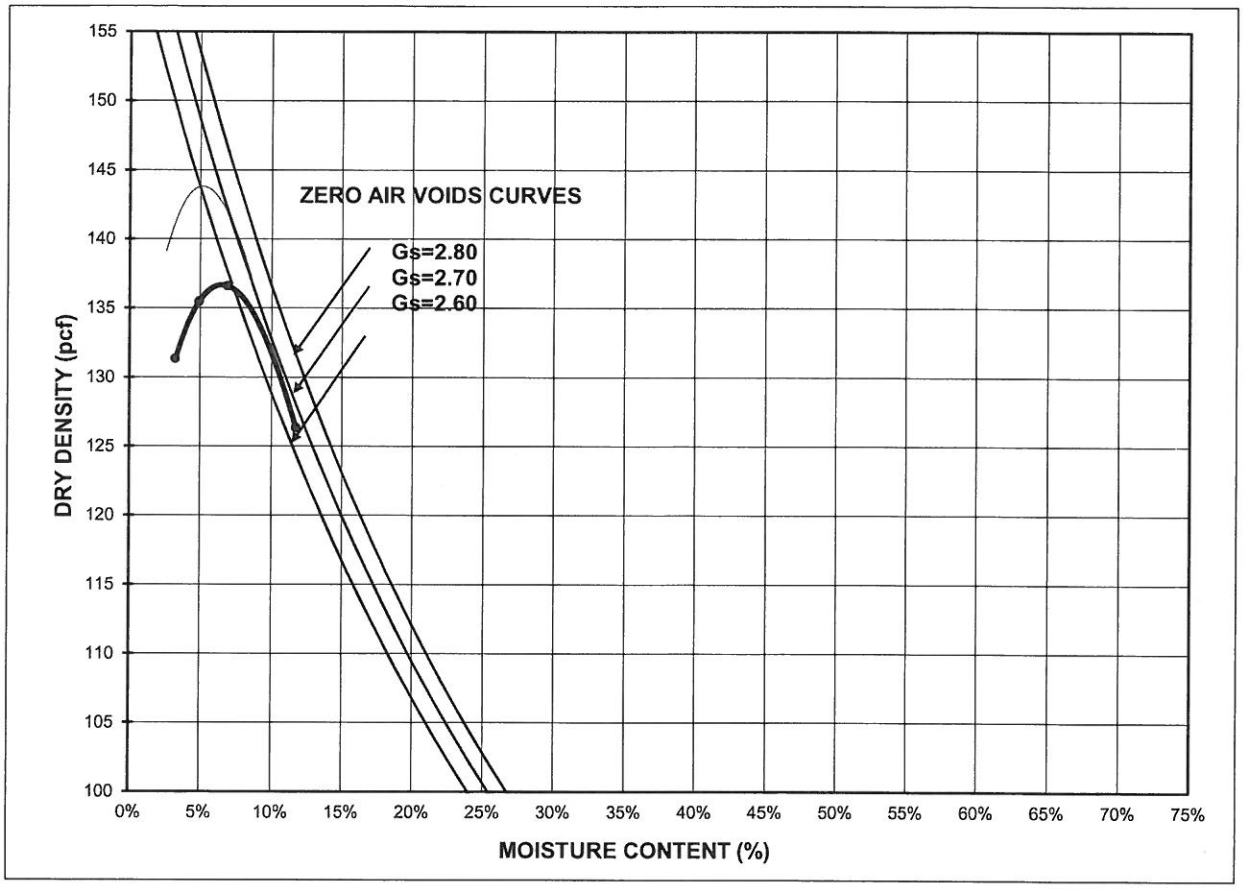

COMPACTION POINTS		
Specimen Number	Dry Density (pcf)	Moisture Content (%)
1	131.3	3.3%
2	135.5	4.9%
3	136.6	6.9%
4	126.3	11.7%

Maximum Dry Density (pcf)	136.7
Optimum Moisture (%)	6.6
Corrected Maximum Dry Density (pcf)	143.8
Corrected Optimum Moisture (%)	5.2
As-Received Moisture Content	3.6%
% Retained on # 4 sieve	37.9%
% Retained on 3/8" sieve	21.6%
% Retained on 3/4" sieve	

DESCRIPTION SAND and GRAVEL, fine to coarse, fine to coarse gravel, some fines; gray and white.

USCS (SW-SM)

CHECK **REVIEW** **APPROVE**

PARTICLE SIZE DISTRIBUTION

ASTM C117, C136

PROJECT NAME: **SOLUTIA/OU-3 RA COVER CQA/AL**
SAMPLE ID: **VDGA-05** Depth: -
TYPE: **Bulk**

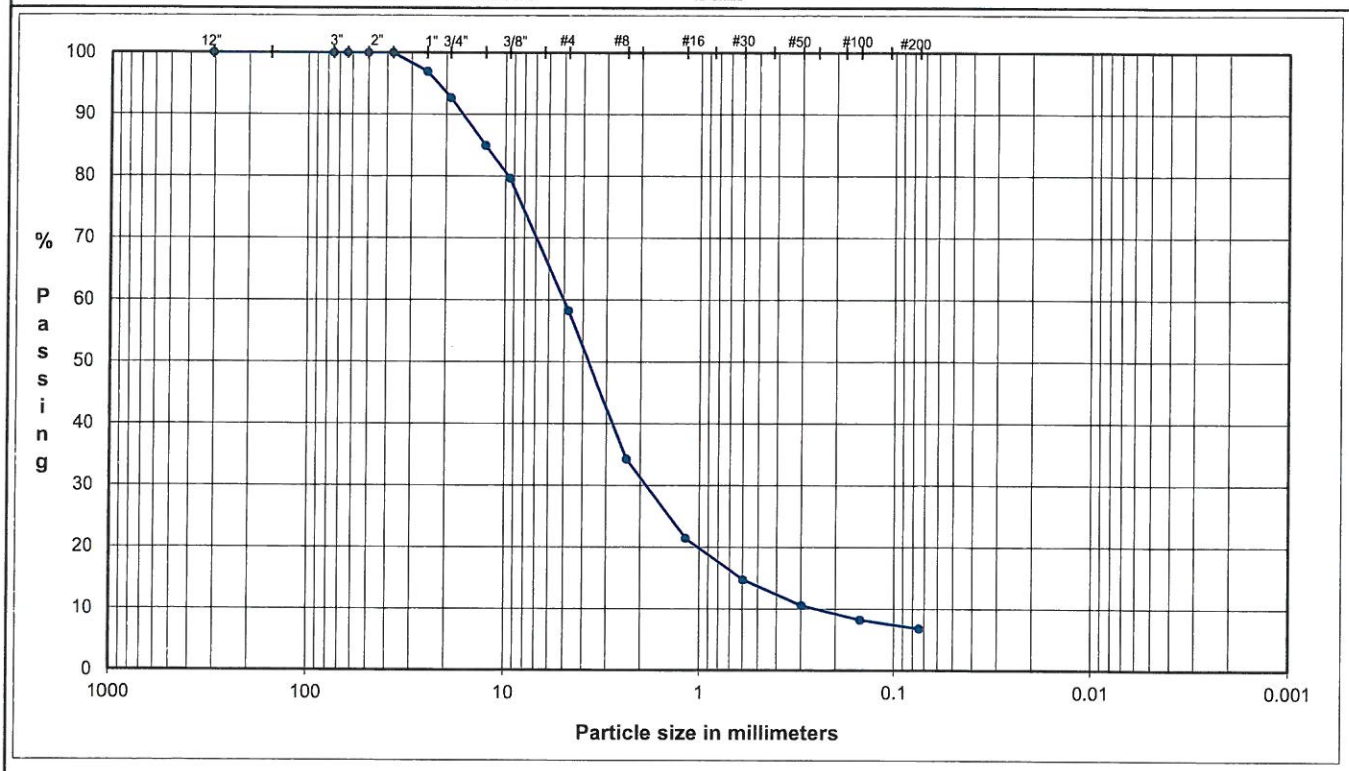

	Coarse	Fine	Coarse	Medium	Fine	Silt or Clay
COBBLES	GRAVEL		SAND			FINES

U.S. Standard Sieves Sizes and Numbers

	Particle Size (mm)	% Passing	Particle Size Classification	Percentage
12.0"	304.8	**100.0**		
3.0"	75	**100.0**	Cobbles	**0.0**
2.5"	63.5	**100.0**		
2.0"	50	**100.0**		
1.5"	37.5	**100.0**		
1.0"	25	**97.0**		
0.75"	19	**92.7**	Coarse Gravel	**7.3**
0.50"	12.7	**85.0**		
0.375"	9.5	**79.7**		
#4	4.75	**58.3**	Fine Gravel	**34.5**
#8	2.36	**34.2**	Coarse Sand	**27.1**
#16	1.18	**21.4**		
#30	0.60	**14.7**	Medium Sand	**18.5**
#50	0.30	**10.6**		
#100	0.15	**8.2**		
#200	0.075	**6.8**	Fine Sand	**5.8**
			Fines	**6.8**

D_{60}= 5.0	D_{30}= 1.88	D_{10}= 0.25
Cu = D60/D10 =	**19.8**	> 6
Cc = D30^2/(D10*D60) =	**2.8**	> 1

DESCRIPTION: SAND and GRAVEL, fine to coarse, fine to coarse gravel, some fines; gray and white.

USCS: SW-SM

M_c 4.0%

TECH	TJ
DATE	11/5/15
CHECK	
REVIEW	
APPROVE	

MOISTURE / DRY DENSITY CURVE
ASTM D 1557 Method B

Mechanical	Modified	Moist Method

PROJECT NAME: SOLUTIA/OU-3 RA COVER CQA/AL
PROJECT NUMBER: 1302962-CQA
SAMPLE ID: VDGA-05 SAMPLE TYPE: Bulk

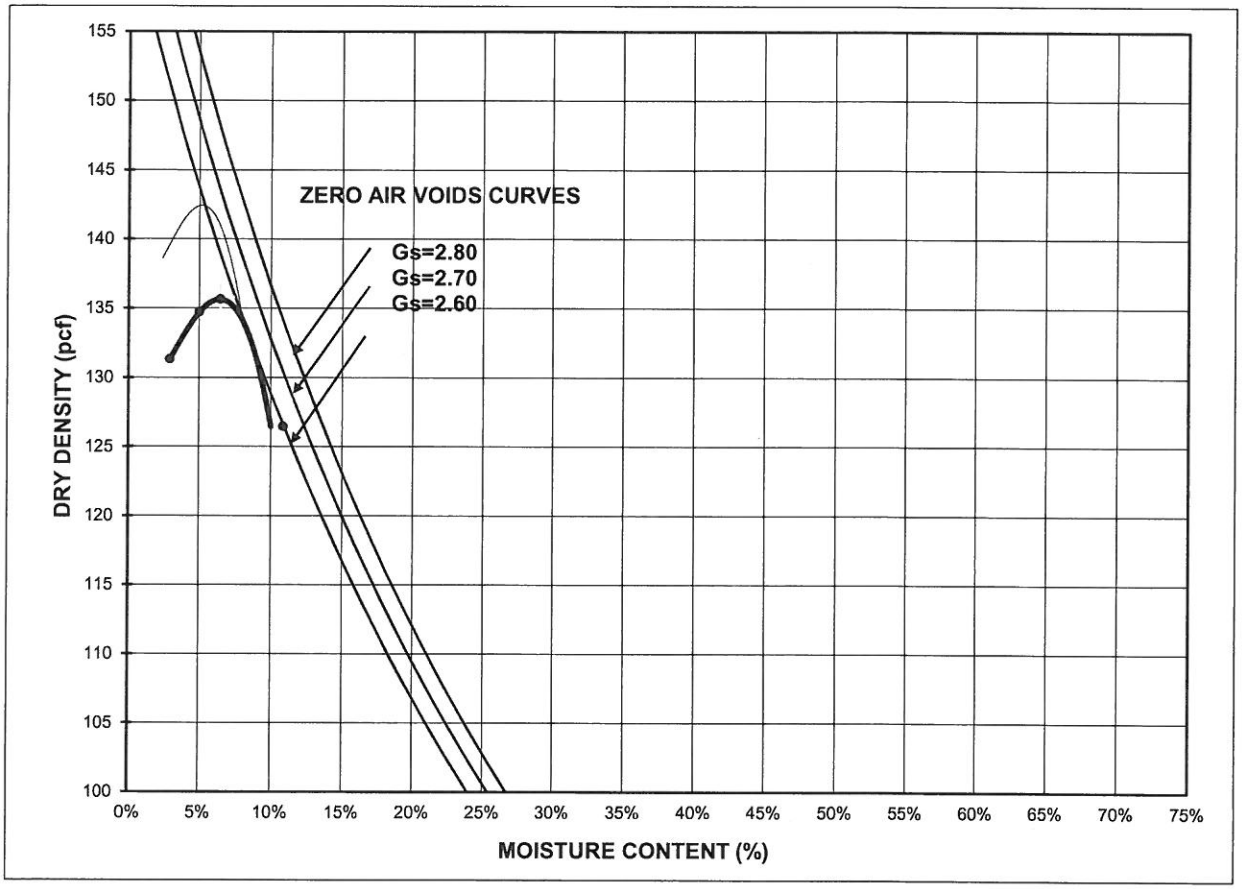

COMPACTION POINTS		
Specimen Number	Dry Density (pcf)	Moisture Content (%)
1	131.3	2.9%
2	134.7	5.0%
3	135.6	6.5%
4	126.4	10.9%

Maximum Dry Density (pcf)	135.8
Optimum Moisture (%)	6.5
Corrected Maximum Dry Density (pcf)	142.6
Corrected Optimum Moisture (%)	5.2
As-Received Moisture Content	3.3%
% Retained on # 4 sieve	42.7%
% Retained on 3/8" sieve	20.3%
% Retained on 3/4" sieve	

DESCRIPTION SAND and GRAVEL, fine to coarse, fine to coarse gravel, some fines; gray and white.

USCS (SW-SM)

CHECK
REVIEW
APPROVE

MOISTURE / DRY DENSITY CURVE
ASTM D 1557 Method A

Mechanical	Modified	Moist Method

PROJECT NAME: SOLUTIA/OU-3 RA COVER CQA/AL
PROJECT NUMBER: 1302962-CQA
SAMPLE ID: VDGA-04 SAMPLE TYPE: Bulk

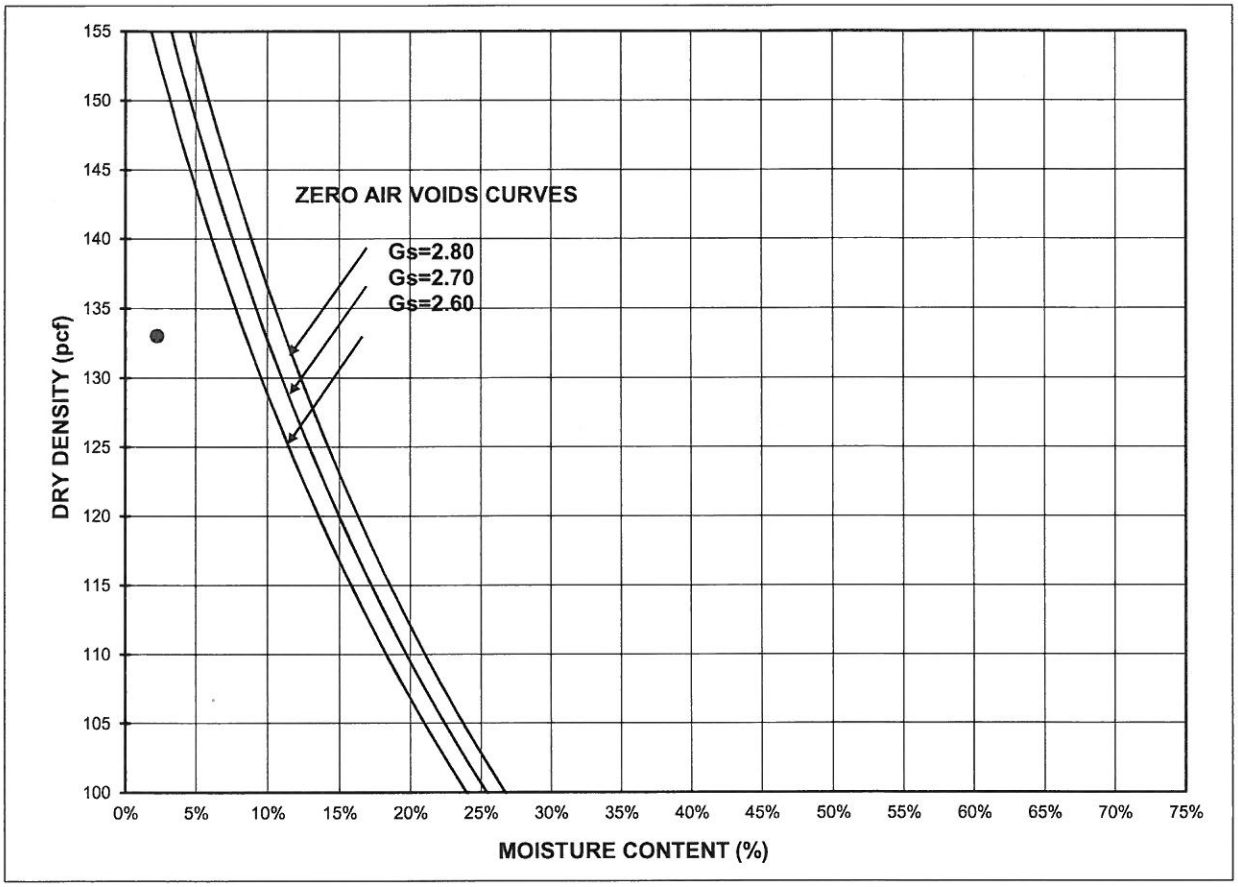

COMPACTION POINTS		
Specimen Number	Dry Density (pcf)	Moisture Content (%)
1	133.0	2.2%

Maximum Dry Density (pcf)	-
Optimum Moisture (%)	-
Corrected Maximum Dry Density (pcf)	
Corrected Optimum Moisture (%)	
As-Received Moisture Content	2.8%
% Retained on # 4 sieve	
% Retained on 3/8" sieve	
% Retained on 3/4" sieve	

DESCRIPTION: SAND and GRAVEL; light gray.

USCS: -

NOTE: Per instructions, sample was processed over the 3/4" sieve and compacted on what was precieved to be the dry side of the compaction curve.

CHECK
REVIEW
APPROVE

PARTICLE SIZE DISTRIBUTION

ASTM C117, C136

PROJECT NAME: **SOLUTIA/OU-3 RA COVER CQA/AL**
SAMPLE ID: **VULCAN DGA** - Depth: -
TYPE: **Bulk**

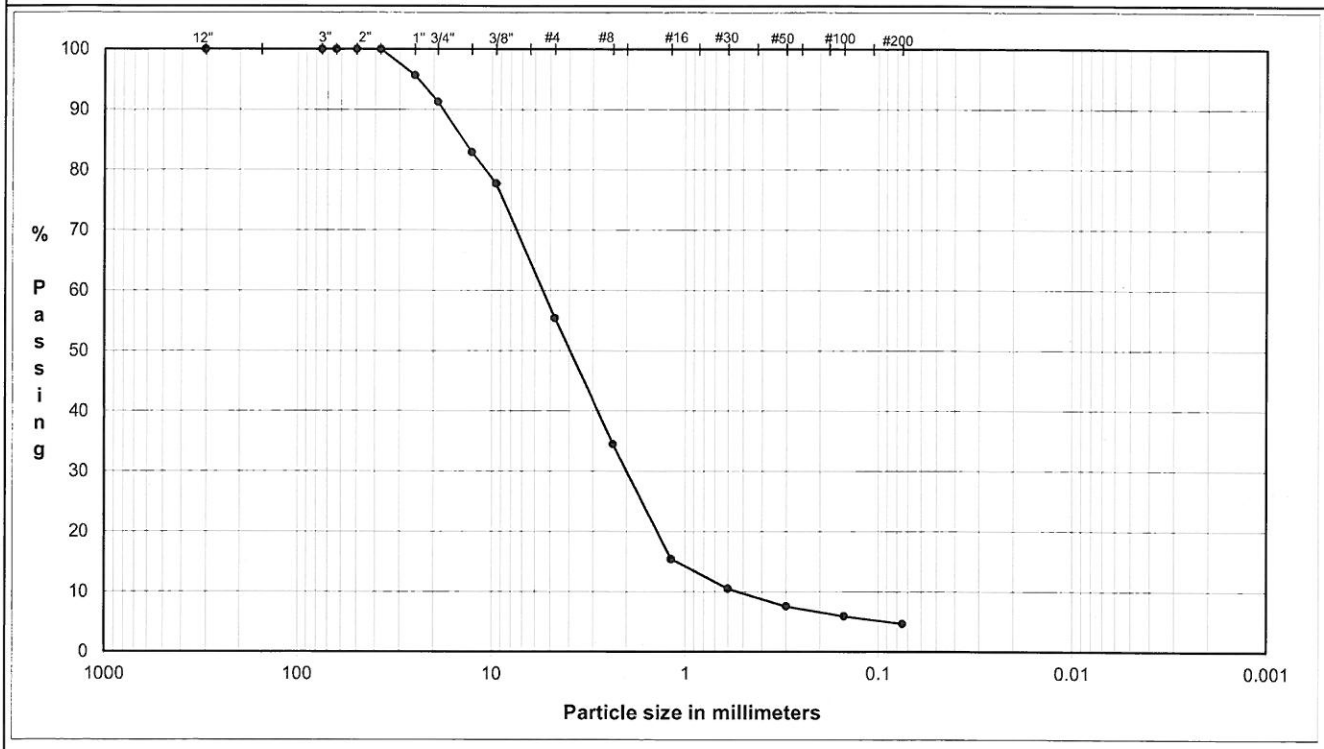

	Coarse	Fine	Coarse	Medium	Fine	Silt or Clay
COBBLES	GRAVEL		SAND			FINES

U.S. Standard Sieves Sizes and Numbers

	Particle Size (mm)	% Passing	Particle Size Classification	Particle Size Percentage
12.0"	304.8	**100.0**		
3.0"	75	**100.0**	Cobbles	**0.0**
2.5"	63.5	**100.0**		
2.0"	50	**100.0**		
1.5"	37.5	**100.0**		
1.0"	25	**95.6**		
0.75"	19	**91.3**	Coarse Gravel	**8.7**
0.50"	12.7	**83.0**		
0.375"	9.5	**77.8**		
#4	4.75	**55.4**	Fine Gravel	**35.8**
#8	2.36	**34.5**	Coarse Sand	**25.5**
#16	1.18	**15.4**		
#30	0.60	**10.5**	Medium Sand	**20.9**
#50	0.30	**7.6**		
#100	0.15	**5.9**		
#200	0.075	**4.7**	Fine Sand	**4.4**
			Fines	**4.7**

D_{60}= 5.5	D_{30}= 2.0	D_{10}= 0.5
Cu = D60/D10 =	**10.2**	> 6
Cc = D30^2 (D10*D60) =	**1.4**	> 1

DESCRIPTION: SAND and GRAVEL, fine to coarse, fine to coarse gravel, trace fines; light gray.

USCS: SW

M_c 2.7%

TECH	TJ/MD
DATE	7/30/15
CHECK	AL
REVIEW	8/11/15
APPROVE	

MOISTURE / DRY DENSITY CURVE
ASTM D 1557 Method B

Mechanical	Modified	Moist Method

PROJECT NAME: SOLUTIA/OU-3 RA COVER CQA/AL
PROJECT NUMBER: 1302962-CQA
SAMPLE ID: VULCAN DGA DEPTH: SAMPLE TYPE: Bulk

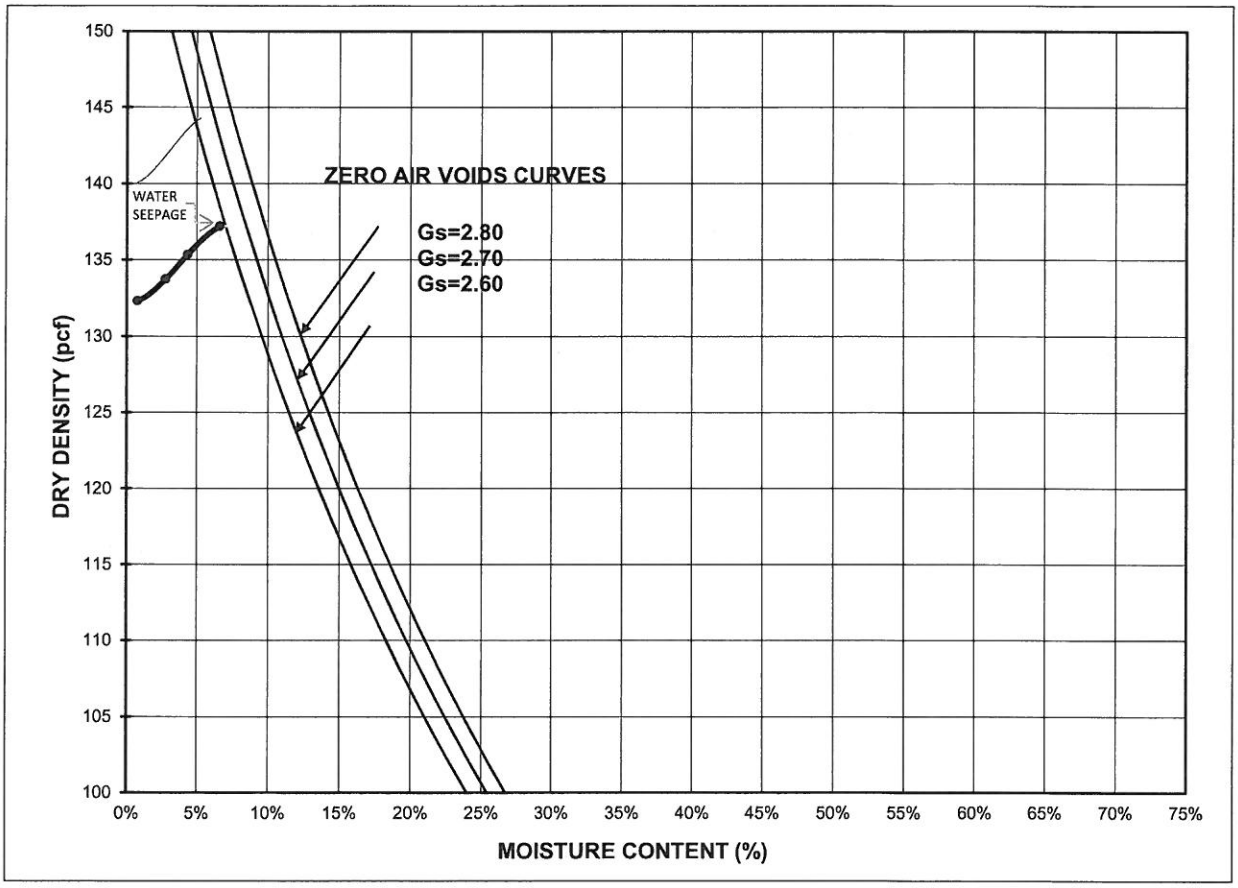

COMPACTION POINTS		
Specimen Number	Dry Density (pcf)	Moisture Content (%)
1	132.3	0.7%
2	133.7	2.7%
3	135.3	4.3%
4	137.2	6.6%

Maximum Dry Density (pcf)	137.2
Optimum Moisture (%)	6.6
Corrected Maximum Dry Density (pcf)	144.3
Corrected Optimum Moisture (%)	5.3
As-Received Moisture Content	2.6%

NOTE: *Beyond the Upper Percentage Limits for D 4718*

% Retained on # 4 sieve	44.6%
% Retained on 3/8" sieve	22.2%
% Retained on 3/4" sieve	

DESCRIPTION SAND and GRAVEL, fine to coarse, fine to coarse gravel, trace fines; light gray.

USCS SW

CHECK AK
REVIEW [illegible]
APPROVE

APPENDIX N

RIPRAP AND CRUSHED AGGREGATE CONFORMANCE TESTING

Vulcan
Materials Company

Materials Submittal

October 26, 2015

Taylor Corporation
Attn.: Ellis Bennett
Phone No.: (256) 835-1800
Phone Cell: (256) 846-0414

RE:	Class I Rip Rap (Solutia Plant Anniston)

The material to be supplied on the above mention project is produced at Vulcan Materials Company Quarry Ohatchee. The material meets Alabama Department of Transportation requirements. This material is visually inspected.

* Average of tests performed at the quarry, and may not be indicative of any one test. In place material may vary from submittal due to degradation and segregation caused by handling, spreading and compaction.

Respectfully submitted,

Barry Woods
Area Technical Services Manager

Vulcan
Materials Company

Materials Submittal

June 23, 2015

Taylor Corporation
Attn.: Ellis Bennett
Phone No.: (256) 835-1800
Cell Phone. :(256) 846-0414

RE:	Class II Rip Rap (Solutia Plant Anniston)

The material to be supplied on the above mention project is produced at Vulcan Materials Company Quarry Ohatchee. The material meets Alabama Department of Transportation requirements. This material is visually inspected.

* Average of tests performed at the quarry, and may not be indicative of any one test. In place material may vary from submittal due to degradation and segregation caused by handling, spreading and compaction.

Respectfully submitted,

Barry Woods
Area Technical Services Manager

Vulcan
Materials Company

Materials Submittal

June 23, 2015

Taylor Corporation
Attn.: Ellis Bennett

RE: #57 Stone Solutia Plant Anniston

The material to be supplied on the above mention project is produced at Vulcan Materials Company Quarry Ohatchee

GRADATION

#57

Sieve Size	% Passing Average Gradation*	% Passing Specification Limits
11/2"	100	100
1"	98	95-100
3/4"	77	
1/2"	44	25-60
3/8"	24	
#4	5	0-10
#8	1	0-5

* Average of tests performed at the quarry, and may not be indicative of any one test. In place material may vary from submittal due to degradation and segregation caused by handling, spreading and compaction.

Respectfully submitted,

Barry Woods
Barry Woods
Area Technical Services Manager
(205)296-1267

PARTICLE SIZE DISTRIBUTION

ASTM C117, C136

PROJECT NAME: **SOLUTIA/OU-3 RA COVER CQA/AL**
SAMPLE ID: **Area E #57 STONE** Depth: -
TYPE: **Bulk**

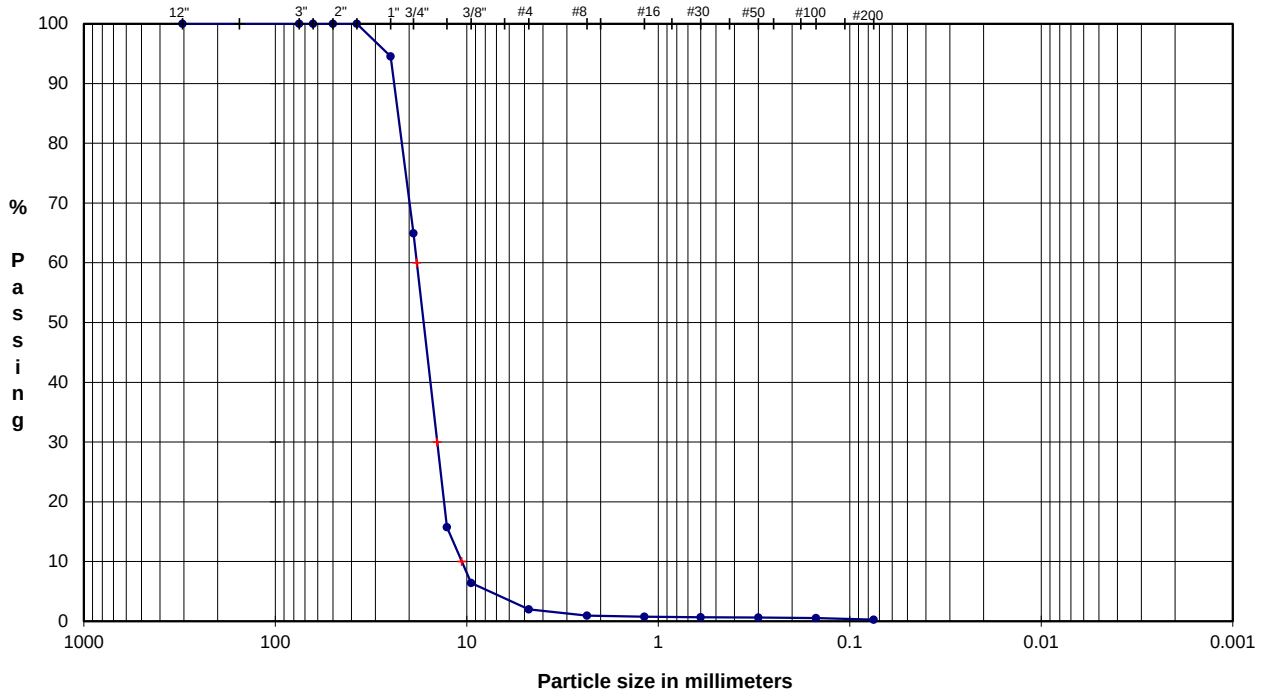

	Coarse	Fine	Coarse	Medium	Fine	Silt or Clay
COBBLES	GRAVEL		SAND			FINES

U.S. Standard Sieves Sizes and Numbers

	Particle Size (mm)	% Passing	Particle Size Classification	Percentage
12.0"	304.8	**100.0**		
3.0"	75	**100.0**	Cobbles	**0.0**
2.5"	63.5	**100.0**		
2.0"	50	**100.0**		
1.5"	37.5	**100.0**		
1.0"	25	**94.6**		
0.75"	19	**64.9**	Coarse Gravel	**35.1**
0.50"	12.7	**15.7**		
0.375"	9.5	**6.4**		
#4	4.75	**2.0**	Fine Gravel	**62.9**
#8	2.36	**0.9**	Coarse Sand	**1.1**
#16	1.18	**0.8**		
#30	0.60	**0.7**	Medium Sand	**0.2**
#50	0.30	**0.6**		
#100	0.15	**0.5**		
#200	0.075	**0.3**	Fine Sand	**0.4**
			Fines	**0.3**

D_{60}= 18.25	D_{30}= 14.27	D_{10}= 10.62
Cu = D60/D10 =	**1.7**	< 4
Cc = D30^2/(D10*D60) =	**1.1**	> 1

DESCRIPTION: GRAVEL, fine to coarse, trace sand, trace fines; gray and light gray.

USCS: GP **M_c**

TECH	TJ/LH
DATE	5/12/16
CHECK	
REVIEW	
APPROVE	

PARTICLE SIZE DISTRIBUTION

ASTM C117, C136

PROJECT NAME: **SOLUTIA/OU-3 RA COVER CQA/AL**
SAMPLE ID: **Area E #57 STONE** Depth: -
TYPE: **Bulk**

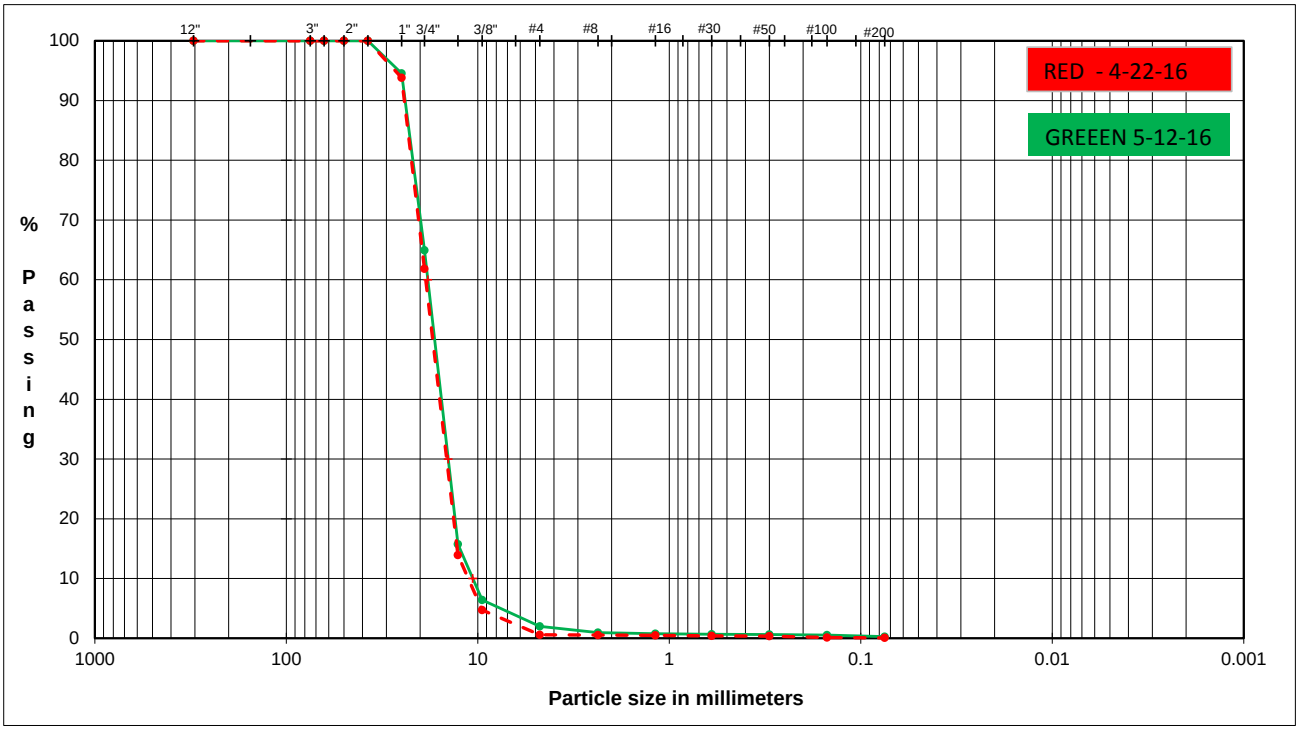

	Coarse	Fine	Coarse	Medium	Fine	Silt or Clay
COBBLES	GRAVEL		SAND			FINES

U.S. Standard Sieves Sizes and Numbers

	Particle Size (mm)	% Passing	Particle Size Classification	Percentage
12.0"	304.8	**100.0**		
3.0"	75	**100.0**	Cobbles	**0.0**
2.5"	63.5	**100.0**		
2.0"	50	**100.0**		
1.5"	37.5	**100.0**		
1.0"	25	**94.6**		
0.75"	19	**64.9**	Coarse Gravel	**35.1**
0.50"	12.7	**15.7**		
0.375"	9.5	**6.4**		
#4	4.75	**2.0**	Fine Gravel	**62.9**
#8	2.36	**0.9**	Coarse Sand	**1.1**
#16	1.18	**0.8**		
#30	0.60	**0.7**	Medium Sand	**0.2**
#50	0.30	**0.6**		
#100	0.15	**0.5**		
#200	0.075	**0.3**	Fine Sand	**0.4**
			Fines	**0.3**

D_{60}= 18.25	D_{30}= 14.27	D_{10}= 10.62
Cu = D60/D10 =	**1.7**	< 4
Cc = D30^2/(D10*D60) =	**1.1**	> 1

DESCRIPTION: GRAVEL, fine to coarse, trace sand, trace fines; gray and light gray.

USCS: GP **M_c**

TECH	TJ/LH
DATE	5/12/16
CHECK	
REVIEW	
APPROVE	

APPENDIX O

SOIL COVER THICKNESS VERIFICATION

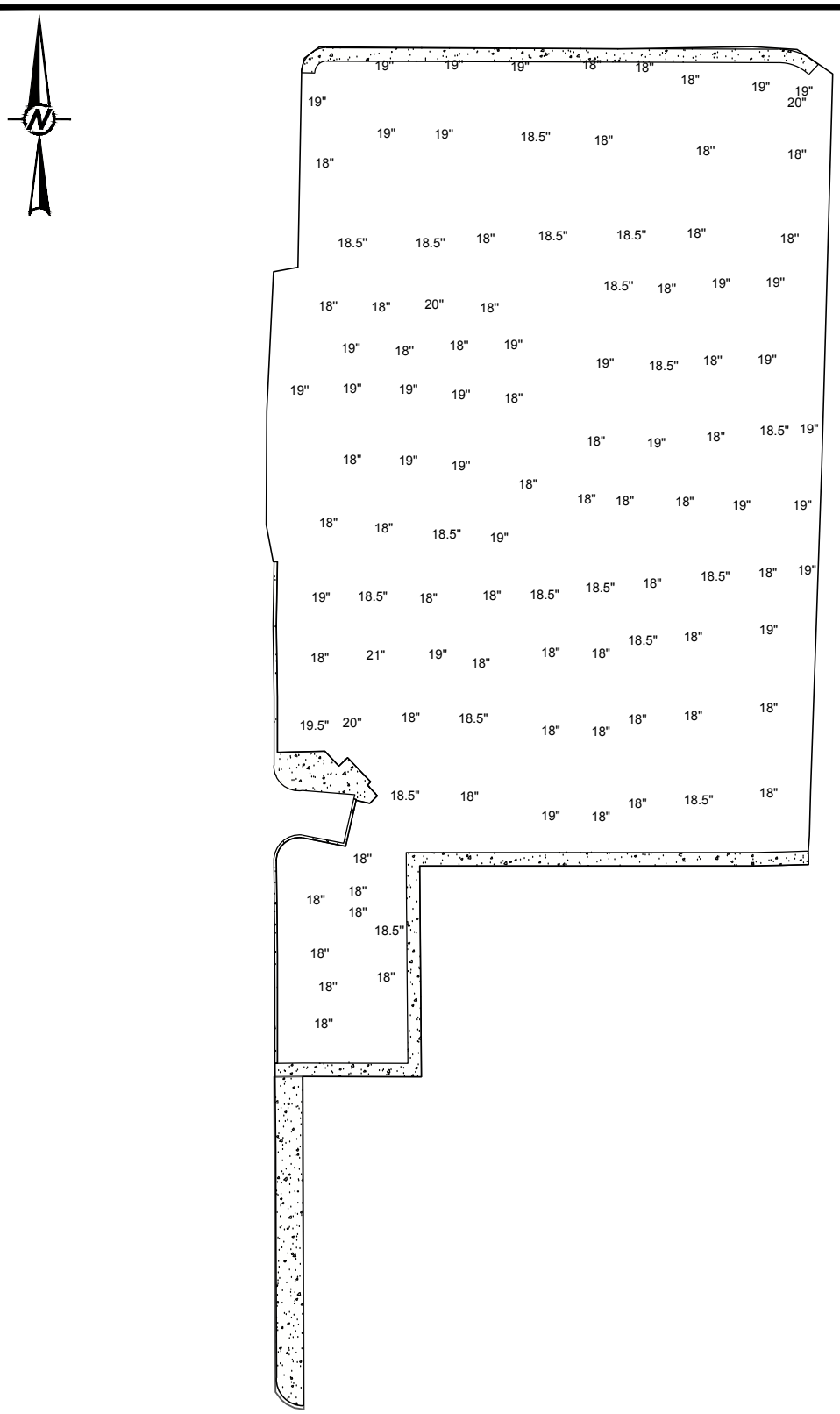

NOTES

1. THICKNESS VERIFICATION BY DIRECT MEASUREMENT FROM HAND-HELD PROBING.
2. LOCATIONS OF PROBING ARE APPROXIMATE.

0 50 100 150
SCALE FEET

REV	DATE	REVISION DESCRIPTION	DES	CADD	CHK	RVW
0	-	-	-	--	-	-

PROJECT

PHARAMACIA LLC / SOLUTIA INC.
OPERABLE UNIT 3 REMEDIAL ACTION
ANNISTON PCB SITE, ALABAMA

TITLE

AREA A
SOIL COVER THICKNESS VERIFICATION

Golder Associates

PROJECT No.		1302962CQA	FILE No.	1302962CQA Depth Verification Figures-
DESIGN	-	-	SCALE	AS SHOWN
CADD	SEP	06/09/17	FIGURE	
CHECK	ARF	06/09/17		O1
REVIEW	SJM	12/22/17		

G:\$Archive H19433680 - Solutia\OU-3 RA Construction\Completion Report\Depth Verification\1302962CQA Depth Verification Figures- .dwg | Layout: Area A | Modified: SPiechota 06/09/2017 10:01 AM | Plotted: SPiechota 06/09/2017

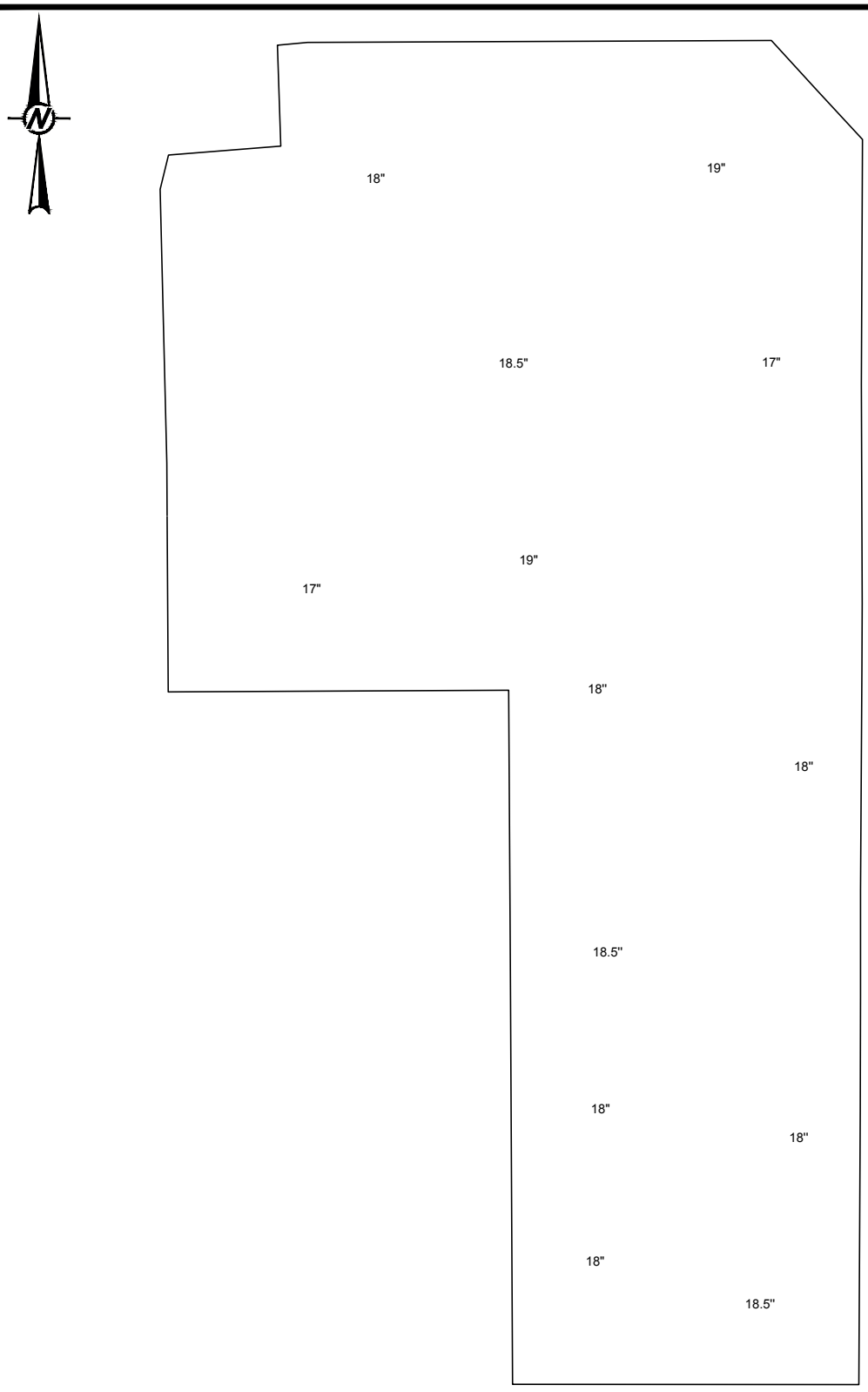

NOTES

1. THICKNESS VERIFICATION BY DIRECT MEASUREMENT FROM HAND-HELD PROBING. SOD USED TO GRASS AREA. SOD INCLUDED 1-INCH THICK ROOT MAT AND SOIL.

2. LOCATIONS OF PROBING ARE APPROXIMATE.

0 15 30 45
SCALE FEET

REV	DATE	REVISION DESCRIPTION	DES	CADD	CHK	RVW
0	-	-	-	-	-	-

PROJECT
PHARMACIA LLC / SOLUTIA INC.
OPERABLE UNIT 3 REMEDIAL ACTION
ANNISTON PCB SITE, ALABAMA

TITLE
AREA E
SOIL COVER THICKNESS VERIFICATION

Golder Associates

PROJECT No.		1302962CQA	FILE No.	1302962CQA Depth Verification Figures-
DESIGN	-	-	SCALE	AS SHOWN
CADD	SEP	06/08/17	FIGURE	
CHECK	ARF	06/08/17		O2
REVIEW	SJM	12/22/17		

G:\$Archive H19433680 - Solutia\OU-3 RA Construction\Completion Report\Depth Verification\1302962CQA Depth Verification Figures-.dwg | Layout: Area E | Modified: SPiechota 06/09/2017 9:48 AM | Plotted: SPiechota 06/09/2017

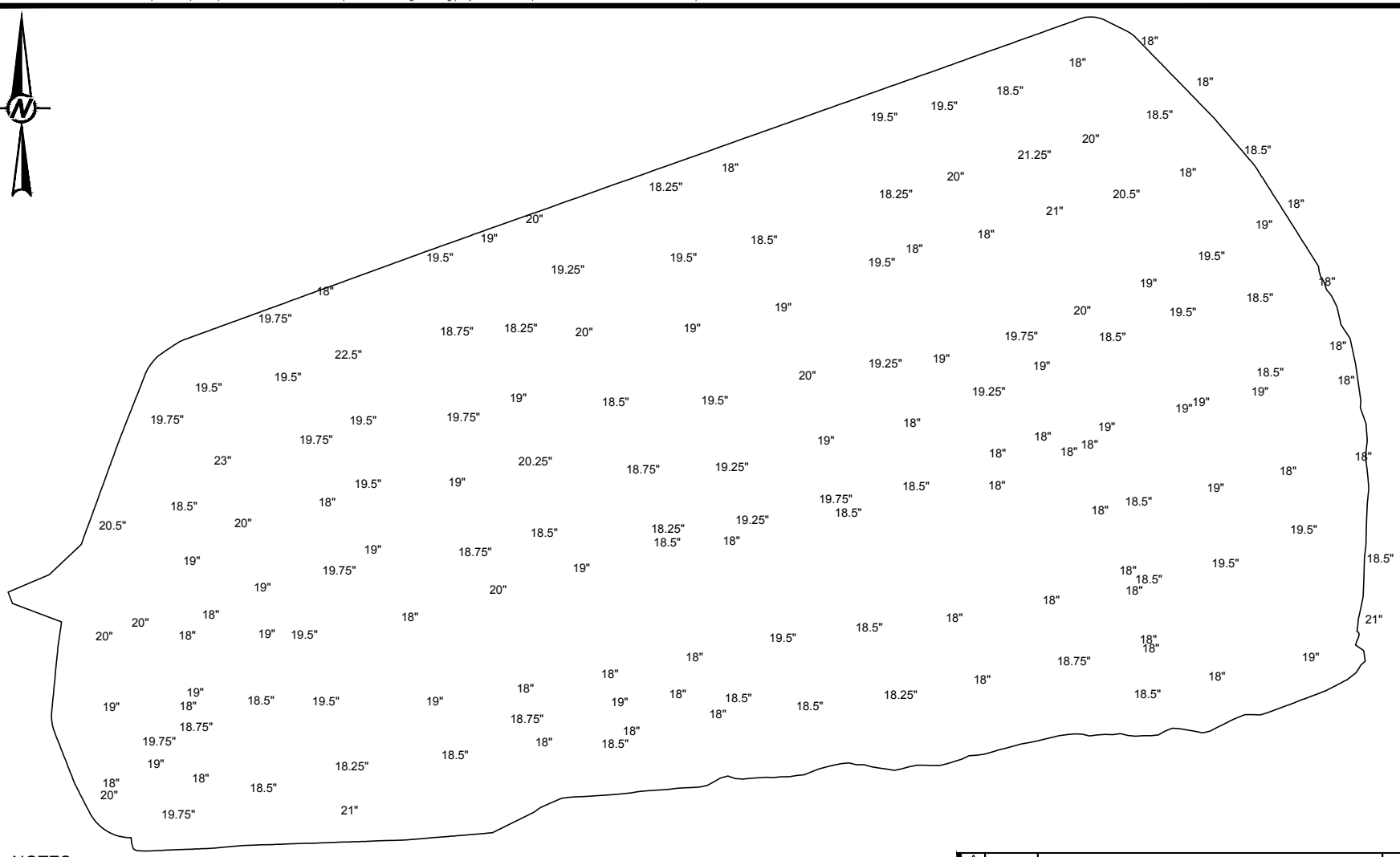

NOTES

1. THICKNESS VERIFICATION BY DIRECT MEASUREMENT FROM HAND-HELD PROBING.
2. LOCATIONS OF PROBING ARE APPROXIMATE.

0 50 100 150
SCALE FEET

REV	DATE	REVISION DESCRIPTION	DES	CADD	CHK	RVW
△	-	-	-	-	-	-

PROJECT

PHARMACIA LLC / SOLUTIA INC.
OPERABLE UNIT 3 REMEDIAL ACTION
ANNISTON PCB SITE, ALABAMA

TITLE

PCB CELLS
SOIL COVER THICKNESS VERIFICATION

Golder Associates

PROJECT No.		1302962CQA	FILE No.	1302962CQA Depth Verification Figures-
DESIGN	-	-	SCALE	AS SHOWN
CADD	SEP	06/09/17	FIGURE	
CHECK	ARF	06/09/17		O3
REVIEW	SJM	12/22/17		

APPENDIX P

DGA FIELD DENSITY TESTING

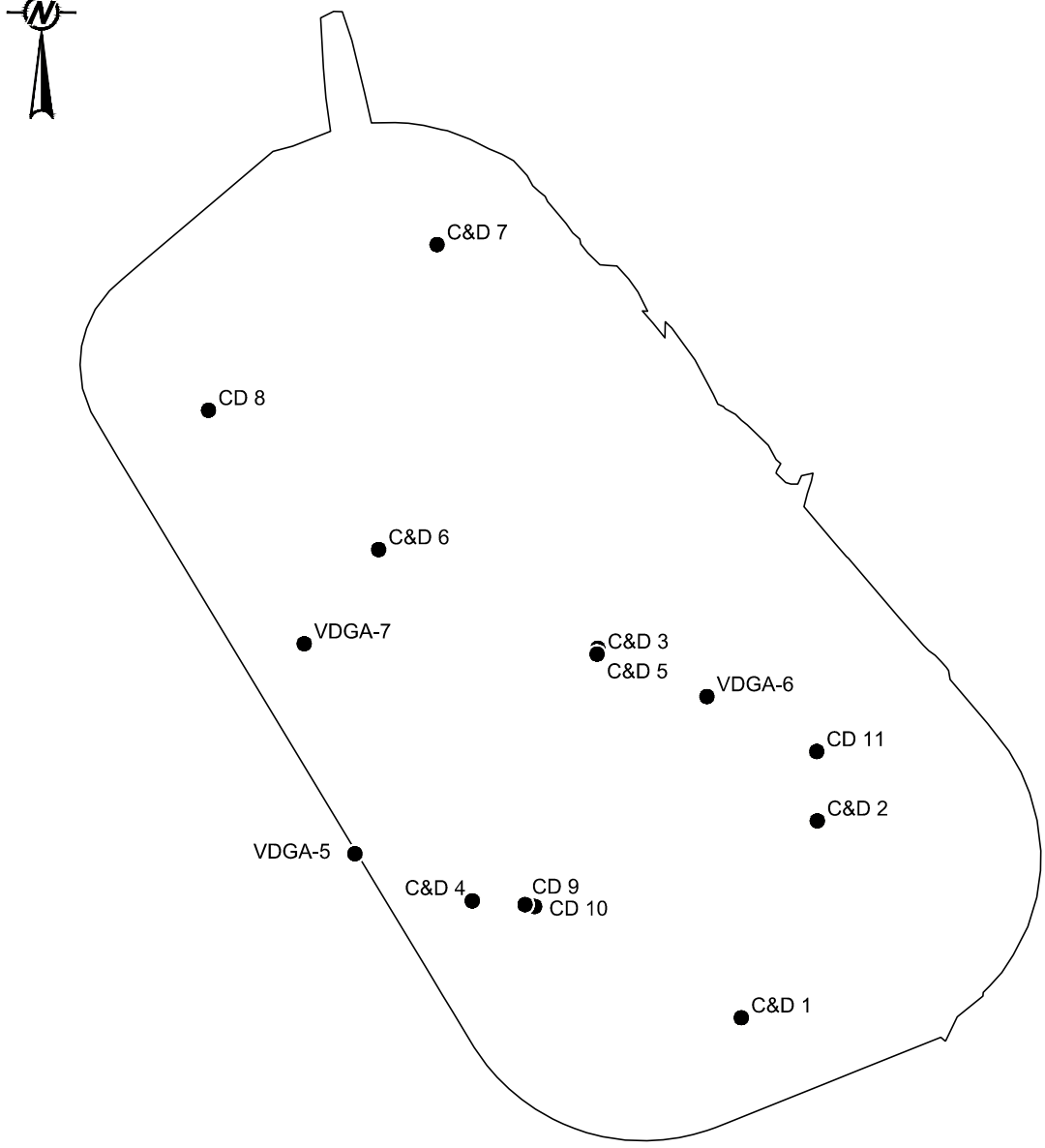

LEGEND

● FIELD DENSITY MEASURMENT LOCATIONS

NOTES

1. LOCATIONS ARE APPROXIMATE.

0 50 100 150

SCALE FEET

REV	DATE	REVISION DESCRIPTION	DES	CADD	CHK	RVW
△	-	-	-	-	-	-

PROJECT

PHARAMACIA LLC / SOLUTIA INC.
OPERABLE UNIT 3 REMEDIAL ACTION
ANNISTON PCB SITE, ALABAMA

TITLE

AREAS C AND D
FIELD DENSITY MEASUREMENT LOCATIONS

Golder Associates

PROJECT No.		1302962CQA	FILE No.	1302962CQA Field Density Locations-
DESIGN	-		SCALE	AS SHOWN
CADD	SEP	06/09/17	FIGURE	
CHECK	ARF	06/09/17		P1
REVIEW	SJM	12/22/17		

\\atlanta\Cadd$\Archive H\9433680 - Solutia\OU-3 RA Construction\Completion Report\Field Density Measurements\1302962CQA Field Density Locations- .dwg | Layout: Area C&D | Modified: SPiechota 06/09/2017 11:00 AM | Plotted: SPiechota 06/09/2017

FIELD MOISTURE / DENSITY TEST RECORD

NUCLEAR GAUGE METHOD

ASTM D 3017 / 2922

PROJECT NUMBER: 1302962CQA **PROJECT TITLE:** OU3 RA CONSTRUCTION
OWNER: SOLUTIA INC **CONTRACTOR:** TAYLOR
LOCATION: AREA C & D **DATE TESTED:** 11/6/2015

TEST NUMBER	1	2	3	4	5	6	7
TEST LOCATION	SEE FIGURE P1						
ELEVATION	6" BASE	6" BASE	6" BASE	6" BASE	6" BASE	6" BASE	6" BASE
DEPTH	4"	4"	4"	4"	4"	4"	4"
DENSITY COUNT	1696	1718	1875	1752	1711	1737	1742
MOISTURE COUNT	54	64	56	53	55	56	60
WET DENSITY, pcf	140.5	139.8	135.5	138.9	140	139.3	139.1
MOISTURE %	2.4	3.1	2.6	2.3	2.5	2.5	2.8
DRY DENSITY, pcf	137.2	135.8	132.1	135.7	136.7	135.8	135.5
MATERIAL DESCRIPTION	UDGA-05	UDGA-05	UDGA-05	UDGA-05	UDGA-05	UDGA-05	UDGA-05
MAX DRY DENSITY, pcf	142.6	142.6	142.6	142.6	142.6	142.6	142.6
OPTIMUM MOISTURE, %	5.2	5.2	5.2	5.2	5.2	5.2	5.2
% COMPACTION	96%	95%	93%	95%	96%	95%	95%
DIFF FROM O.M.C.	2.8	2.1	2.6	2.9	2.7	2.7	2.4
PASS/FAIL (DENSITY)	P	P	F	P	P	P	P
PASS/FAIL (MOISTURE)	P	P	P	P	P	P	P

SPECIFICATIONS:

95 % STANDARD / MODIFIED

3 % OF O.M.C.

DAILY STANDARD COUNTS:

MOISTURE 617

DENSITY 2220

TESTED BY: SC **CHECKED BY:** _____ **DATE:** _____

GOLDER FORM S17-0699

(JANUARY 2005)

GOLDER ASSOCIATES INC.

FIELD MOISTURE / DENSITY TEST RECORD

NUCLEAR GAUGE METHOD

ASTM D 3017 / 2922

PROJECT NUMBER: 1302962CQA
PROJECT TITLE: OU3 RA CONSTRUCTION
OWNER: SOLUTIA INC
CONTRACTOR: TAYLOR
LOCATION: AREA C & D
DATE TESTED: 11/10/2015

TEST NUMBER	8						
TEST LOCATION	SEE FIGURE P1						
ELEVATION	6" BASE						
DEPTH	4"						
DENSITY COUNT	1692						
MOISTURE COUNT	67						
WET DENSITY, pcf	140						
MOISTURE %	3.3						
DRY DENSITY, pcf	135.5						
MATERIAL DESCRIPTION	UDGA-05						
MAX DRY DENSITY, pcf	142.6						
OPTIMUM MOISTURE, %	5.2						
% COMPACTION	95%						
DIFF FROM O.M.C.	1.9						
PASS/FAIL (DENSITY)	P						
PASS/FAIL (MOISTURE)	P						

SPECIFICATIONS:

95 % STANDARD / MODIFIED

3 % OF O.M.C.

DAILY STANDARD COUNTS:

MOISTURE **618**

DENSITY **2196**

TESTED BY: SC **CHECKED BY:** _____ **DATE:** _____

GOLDER FORM S17-0699

(JANUARY 2005)

GOLDER ASSOCIATES INC.

FIELD MOISTURE / DENSITY TEST RECORD

NUCLEAR GAUGE METHOD

ASTM D 3017 / 2922

PROJECT NUMBER: 1302962CQA **PROJECT TITLE:** OU3 RA CONSTRUCTION
OWNER: SOLUTIA INC **CONTRACTOR:** TAYLOR
LOCATION: AREA C & D **DATE TESTED:** 11/11/2015

TEST NUMBER	9	10	11				
TEST LOCATION	SEE FIGURE P1						
ELEVATION	6" BASE	6" BASE	6" BASE				
DEPTH	4"	4"	4"				
DENSITY COUNT	2013	1688	1522				
MOISTURE COUNT	61	67	63				
WET DENSITY, pcf	131.2	140	145.1				
MOISTURE %	3	3.3	2.9				
DRY DENSITY, pcf	127.4	135.5	141.0				
MATERIAL DESCRIPTION	UDGA-05	UDGA-05	UDGA-05				
MAX DRY DENSITY, pcf	142.6	142.6	142.6				
OPTIMUM MOISTURE, %	5.2	5.2	5.2				
% COMPACTION	89%	95%	99%				
DIFF FROM O.M.C.	2.2	1.9	2.3				
PASS/FAIL (DENSITY)	F	P	P				
PASS/FAIL (MOISTURE)	P	P	P				

SPECIFICATIONS:

95 % STANDARD / MODIFIED

3 % OF O.M.C.

DAILY STANDARD COUNTS:

MOISTURE 624

DENSITY 2189

TESTED BY: SC **CHECKED BY:** _____ **DATE:** _____

GOLDER FORM S17-0699

(JANUARY 2005)

GOLDER ASSOCIATES INC.

APPENDIX Q

DGA COVER THICKNESS VERIFICATION

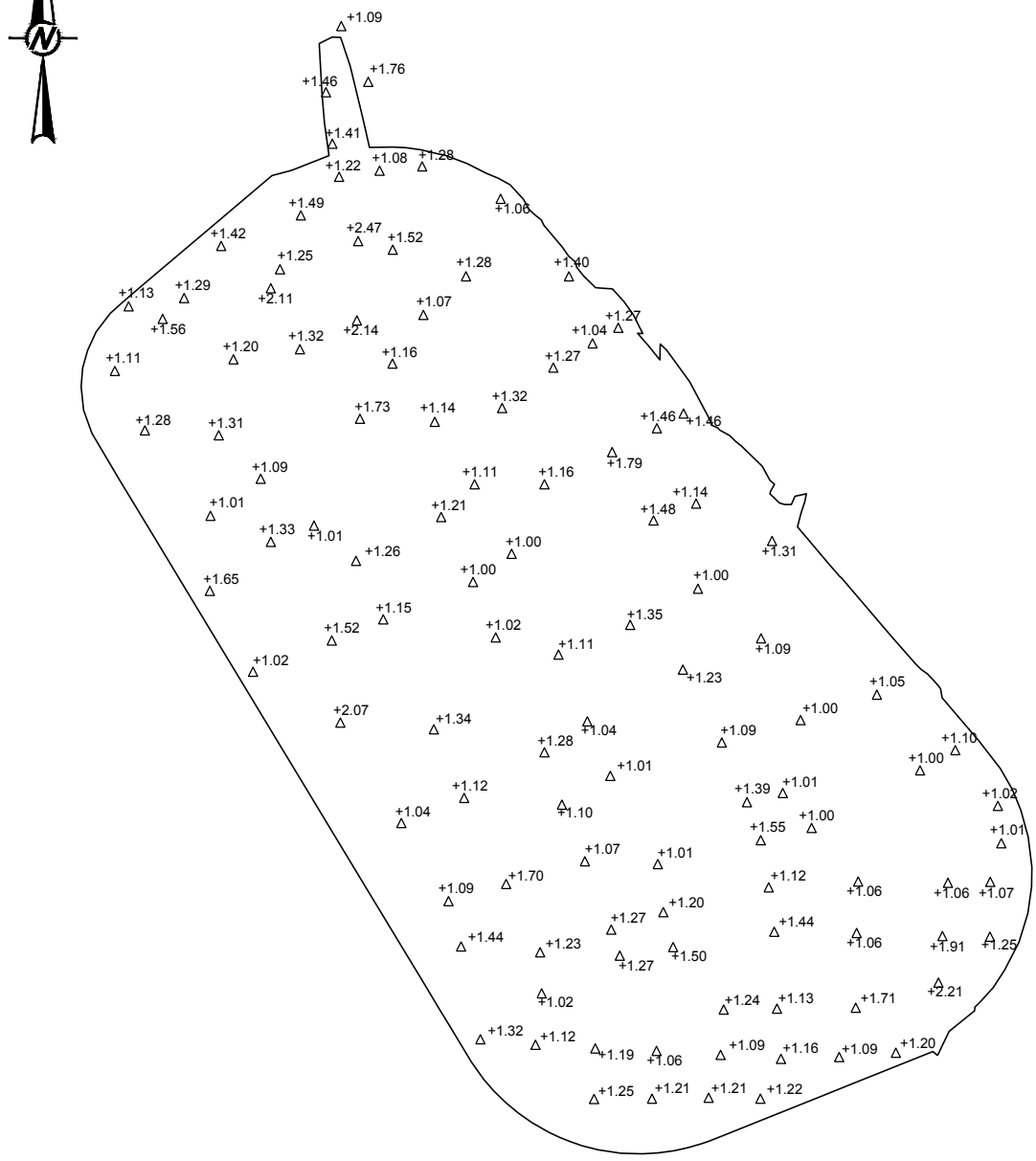

LEGEND

△ VERIFICATION POINT (THICKNESS IN FEET)

NOTES

1. THICKNESS VERIFICATION BY COMPARISON OF PRE- AND POST- RA SURVEY DATA.

0 50 100 150
SCALE FEET

REV	DATE	REVISION DESCRIPTION	DES	CADD	CHK	RVW
△	-	-	-	-	-	-

PROJECT

PHARAMACIA LLC / SOLUTIA INC.
OPERABLE UNIT 3 REMEDIAL ACTION
ANNISTON PCB SITE, ALABAMA

TITLE

AREAS C AND D
DGA COVER THICKNESS VERIFICATION

Golder Associates

PROJECT No.		1302962CQA	FILE No.	1302962CQA Depth Verification Figures-
DESIGN	-		SCALE	AS SHOWN
CADD	SEP	06/09/17	FIGURE	
CHECK	ARF	06/09/17		Q1
REVIEW	SJM	12/22/17		

G:\$Archive H19433680 - Solutia\OU-3 RA Construction\Completion Report\Depth Verification\1302962CQA Depth Verification Figures- .dwg | Layout: Area C&D | Modified: SPiechota 08/28/2017 3:09 PM | Plotted: SPiechota 08/28/2017

APPENDIX R

CONCRETE BREAK REPORTS

APPENDIX R1

Autoclave Unit Area

G:\$Archive H\9433680 - Solutia\OU-3 RA Construction\Completion Report\Concrete Tracking\R1 Concrete Tracking.dwg | Layout: ANSI_A_FIGURE_LANDSCAPE | Modified: SPiechota 08/29/2017 7:46 AM | Plotted: SPiechota 08/29/2017

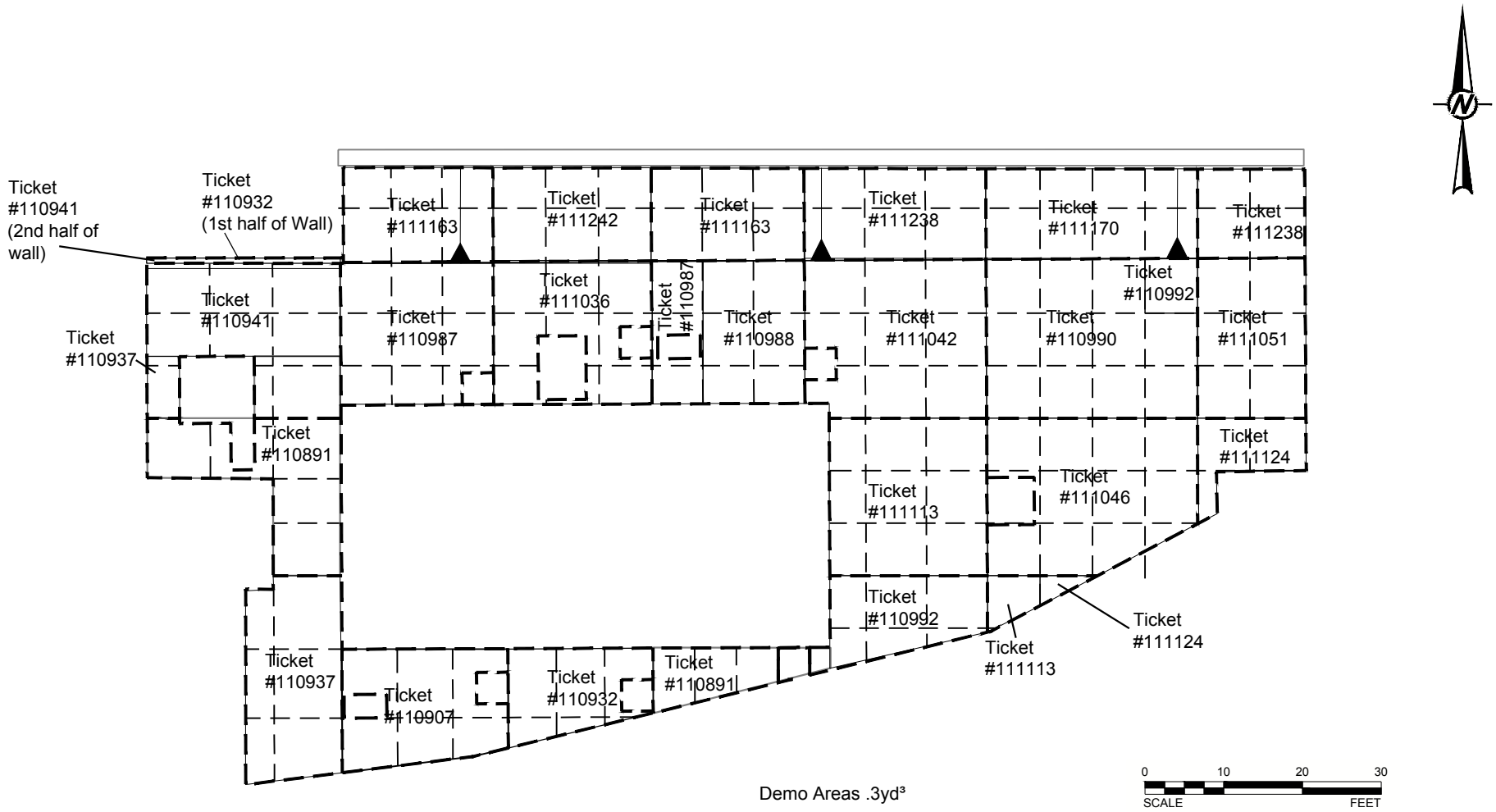

REV	DATE	REVISION DESCRIPTION	DES	CADD	CHK	RVW
△	-	-	-	-	-	-

PROJECT

PHARMACIA LLC / SOLUTIA INC.
OPERABLE UNITE 3 REMEDIAL ACTION
ANNISTON PCB SITE, ALABAMA

TITLE

AUTOCLAVE CONCRETE POUR DETAILS

Golder Associates

PROJECT No.		1302962CQA	FILE No.	R1 Concrete Tracking
DESIGN	-	-	SCALE	AS SHOWN
CADD	SEP	2017/08/29	FIGURE	
CHECK	ARF	2017/08/29		R1
REVIEW	-	-		

Table 1 - Concrete Compressive Strength Data, Autoclave Cover

					CYLINDER Data								
Set Number	Specimen ID	Sampled By:	Date of Concrete Pour	Batch ID	Date Sample Received	Date Tested	Age at Test (days)	Specimen Weight (lb)	Specified Strength	Maximum Load (lbs)	Average Area (in^2)	Compress-ive Strength (lbs)	Percent of Specified Strength
1	A	Webb	Friday, August 21, 2015	110891	Saturday, August 22, 2015	Monday, August 24, 2015	3	28.90	3,000 psi @28 days	79700	28.27	2,818.8	94.0%
1	B	Webb	Friday, August 21, 2015		Saturday, August 22, 2015	Friday, August 28, 2015	7	29.17	3,000 psi @28 days	84960	28.27	3,004.8	100.2%
1	C	Webb	Friday, August 21, 2015		Saturday, August 22, 2015	Friday, September 18, 2015	28	29.71	3,000 psi @28 days	108940	28.27	3,853.0	128.4%
1	D	Webb	Friday, August 21, 2015		Saturday, August 22, 2015								
2	A	Terracon	Friday, August 21, 2015	110907	Saturday, August 22, 2015	Monday, August 24, 2015	3	8.16	3,000 psi @28 days	18990	12.57	1,511.2	50.4%
2	B	Terracon	Friday, August 21, 2015		Saturday, August 22, 2015	Friday, August 28, 2015	7	8.12	3,000 psi @28 days	20930	12.57	1,665.6	55.5%
2	C	Terracon	Friday, August 21, 2015		Saturday, August 22, 2015	Friday, September 18, 2015	28	8.32	3,000 psi @28 days	30790	12.57	2,450.2	81.7%
2	D	Terracon	Friday, August 21, 2015		Saturday, August 22, 2015	Friday, September 18, 2015	28	8.34	3,000 psi @28 days	30800	12.57	2,451.0	81.7%
3	A	Terracon	Tuesday, August 25, 2015	111036	Wednesday, August 26, 2015	Friday, August 28, 2015	3	8.42	3,000 psi @28 days	23570	12.57	1,875.6	62.5%
3	B	Terracon	Tuesday, August 25, 2015		Wednesday, August 26, 2015	Tuesday, September 01, 2015	7	8.44	3,000 psi @28 days	31290	12.57	2,490.0	83.0%
3	C	Terracon	Tuesday, August 25, 2015		Wednesday, August 26, 2015	Tuesday, September 22, 2015	28	8.53	3,000 psi @28 days	42850	12.57	3,409.9	113.7%
3	D	Terracon	Tuesday, August 25, 2015		Wednesday, August 26, 2015	Tuesday, September 22, 2015	28	8.53	3,000 psi @28 days	45900	12.57	3,652.6	121.8%
4	A	Terracon	Wednesday, August 26, 2015	111113	Thursday, August 27, 2015	Monday, August 31, 2015	5	8.47	3,000 psi @28 days	28250	12.57	2,248.1	74.9%
4	B	Terracon	Wednesday, August 26, 2015		Thursday, August 27, 2015	Wednesday, September 02, 2015	7	8.48	3,000 psi @28 days	29680	12.57	2,361.9	78.7%
4	C	Terracon	Wednesday, August 26, 2015		Thursday, August 27, 2015	Wednesday, September 23, 2015	28	8.50	3,000 psi @28 days	41010	12.57	3,263.5	108.8%
4	D	Terracon	Wednesday, August 26, 2015		Thursday, August 27, 2015	Wednesday, September 23, 2015	28	8.58	3,000 psi @28 days	38330	12.57	3,050.2	101.7%
5	A	Terracon	Thursday, August 27, 2015	111163	Friday, August 28, 2015	Monday, August 31, 2015	4	8.54	3,000 psi @28 days	34230	12.57	2,723.9	90.8%
5	B	Terracon	Thursday, August 27, 2015		Friday, August 28, 2015	Thursday, September 03, 2015	7	8.48	3,000 psi @28 days	39980	12.57	3,181.5	106.1%
5	C	Terracon	Thursday, August 27, 2015		Friday, August 28, 2015	Thursday, September 24, 2015	28	8.58	3,000 psi @28 days	48320	12.57	3,845.2	128.2%
5	D	Terracon	Thursday, August 27, 2015		Friday, August 28, 2015	Thursday, September 24, 2015	28	8.52	3,000 psi @28 days	46810	12.57	3,725.0	124.2%
6	A	Terracon	Friday, August 28, 2015	111238	Saturday, August 29, 2015	Monday, August 31, 2015	3	8.43	3,000 psi @28 days	38220	12.57	3,041.5	101.4%
6	B	Terracon	Friday, August 28, 2015		Saturday, August 29, 2015	Friday, September 04, 2015	7	8.52	3,000 psi @28 days	43540	12.57	3,464.8	115.5%
6	C	Terracon	Friday, August 28, 2015		Saturday, August 29, 2015	Friday, September 25, 2015	28	8.33	3,000 psi @28 days	52060	12.57	4,142.8	138.1%
6	D	Terracon	Friday, August 28, 2015		Saturday, August 29, 2015	Friday, September 25, 2015	28	8.44	3,000 psi @28 days	51360	12.57	4,087.1	136.2%

CONCRETE COMPRESSIVE STRENGTH TEST REPORT

Report Number: E1151124.0013
Service Date: 08/28/15
Report Date: 09/28/15 Revision 2 - 28-day results
Task:

Terracon
110 12th St. North
Birmingham, AL 35203
205-942-1289

Client

Taylor Corporation
Attn: Ellis Bennett
PO Box 3424
Oxford, AL 36203

Project

Solutia OU-3 Remediation
Clydesdale Avenue
Anniston, AL

Project Number: E1151124

Material Information

Specified Strength: 3,000 psi @ 28 days

Mix ID: RM3002
Supplier: Webb
Batch Time: 0930 **Plant:** 202
Truck No.: 106 **Ticket No.:** 111238

Sample Information

Sample Date: 08/28/15 **Sample Time:** 1000
Sampled By: Kerry Cobb
Weather Conditions: p.cloudy
Accumulative Yards: 8 **Batch Size (cy):** 8
Placement Method: Chute
Water Added Before (gal): 0
Water Added After (gal): 0 **Slump After (in):** 3
Sample Location: Autoclave area slab see drawing
Placement Location: same

Field Test Data

Test	Result	Specification
Slump (in):	3	
Air Content (%):	6.0	
Concrete Temp. (F):	83	
Ambient Temp. (F):	82	
Plastic Unit Wt. (pcf):	144.4	
Yield (Cu. Yds.):		

Laboratory Test Data

Set No.	Specimen ID	Avg Diam. (in)	Area (sq in)	Date Received	Specimen Weight (lbs)	Date Tested	Age at Test (days)	Maximum Load (lbs)	Compressive Strength (psi)	Fracture Type
6	A	4.00	12.57	08/28/15	8.43	08/31/15	3	38,220	3,040	3
6	B	4.00	12.57	08/28/15	8.52	09/04/15	7	43,540	3,470	2
6	C	4.00	12.57	08/28/15	8.33	09/25/15	28	52,060	4,140	2
6	D	4.00	12.57	08/28/15	8.44	09/25/15	28	51,360	4,090	2
							Average (28 days)		**4,120**	

Comments: **Average compressive strength of 28 day cylinders complies with the specified strength.**
n/a

Samples Made By: Terracon
Services:

Terracon Rep.: Kerry Cobb
Reported To: Ellis Bennett with Taylor Corporation
Contractor:
Report Distribution:
(1) Taylor Corporation, Emailed
(1) Brown Construction & Development, Emailed

Start/Stop:

Reviewed By: Anthony Chearwood

Test Methods: ASTM C 31, ASTM C39, ASTM C138, ASTM C143, ASTM C172, ASTM C1064

The tests were performed in general accordance with applicable ASTM, AASHTO, or DOT test methods. This report is exclusively for the use of the client indicated above and shall not be reproduced except in full without the written consent of our company. Test results transmitted herein are only applicable to the actual samples tested at the location(s) referenced and are not necessarily indicative of the properties of other apparently similar or identical materials.

CONCRETE COMPRESSIVE STRENGTH TEST REPORT

Report Number: E1151124.0010
Service Date: 08/27/15
Report Date: 09/25/15 Revision 2 - 28-day results
Task:

Terracon
110 12th St. North
Birmingham, AL 35203
205-942-1289

Client

Taylor Corporation
Attn: Ellis Bennett
PO Box 3424
Oxford, AL 36203

Project

Solutia OU-3 Remediation
Clydesdale Avenue
Anniston, AL

Project Number: E1151124

Material Information

Specified Strength: 3,000 psi @ 28 days

Mix ID: RM3002
Supplier: Webb
Batch Time: 1030 **Plant:** 202
Truck No.: 71 **Ticket No.:** 111163

Sample Information

Sample Date: 08/27/15 **Sample Time:** 1100
Sampled By: Kerry Cobb
Weather Conditions: clear
Accumulative Yards: 9 **Batch Size (cy):** 9
Placement Method: Direct Discharge
Water Added Before (gal): 0
Water Added After (gal): 0 **Slump After (in):** 4
Sample Location: Autoclave area see drawing
Placement Location: same

Field Test Data

Test	Result	Specification
Slump (in):	4	
Air Content (%):	5.5	
Concrete Temp. (F):	82	
Ambient Temp. (F):	80	
Plastic Unit Wt. (pcf):	144.3	
Yield (Cu. Yds.):		

Laboratory Test Data

Set No.	Specimen ID	Avg Diam. (in)	Area (sq in)	Date Received	Specimen Weight (lbs)	Date Tested	Age at Test (days)	Maximum Load (lbs)	Compressive Strength (psi)	Fracture Type
5	A	4.00	12.57	08/28/15	8.54	08/31/15	4	34,230	2,720	3
5	B	4.00	12.57	08/28/15	8.48	09/03/15	7	39,980	3,180	2
5	C	4.00	12.57	08/28/15	8.58	09/24/15	28	48,320	3,850	2
5	D	4.00	12.57	08/28/15	8.52	09/24/15	28	46,810	3,730	3
							Average (28 days)		**3,790**	

Comments: **Average compressive strength of 28 day cylinders complies with the specified strength.**
n/a

Samples Made By: Terracon
Services:

Terracon Rep.: Kerry Cobb
Reported To: Ellis Bennett with Taylor Corporation
Contractor:
Report Distribution:
(1) Taylor Corporation, Emailed
(1) Brown Construction & Development, Emailed

Start/Stop:

Reviewed By: No PM Assigned

Test Methods:

The tests were performed in general accordance with applicable ASTM, AASHTO, or DOT test methods. This report is exclusively for the use of the client indicated above and shall not be reproduced except in full without the written consent of our company. Test results transmitted herein are only applicable to the actual samples tested at the location(s) referenced and are not necessarily indicative of the properties of other apparently similar or identical materials.

CONCRETE COMPRESSIVE STRENGTH TEST REPORT

Report Number: E1151124.0004
Service Date: 08/25/15
Report Date: 09/23/15 Revision 2 - 28-day results
Task:

Terracon
110 12th St. North
Birmingham, AL 35203
205-942-1289

Client

Taylor Corporation
Attn: Ellis Bennett
PO Box 3424
Oxford, AL 36203

Project

Solutia OU-3 Remediation
Clydesdale Avenue
Anniston, AL

Project Number: E1151124

Material Information

Specified Strength: 3,000 psi @ 28 days

Mix ID: RM3002
Supplier: Webb
Batch Time: 1300 **Plant:** 202
Truck No.: 76 **Ticket No.:** 111036

Sample Information

Sample Date: 08/25/15 **Sample Time:** 1330
Sampled By: Kerry Cobb
Weather Conditions: clear
Accumulative Yards: 9 **Batch Size (cy):** 9
Placement Method: Pump
Water Added Before (gal): 0
Water Added After (gal): 0 **Slump After (in):** 4.5
Sample Location: autoclave area slab see drawing
Placement Location: same

Field Test Data

Test	Result	Specification
Slump (in):	4 1/2	4 - 6
Air Content (%):	6.0	
Concrete Temp. (F):	77	
Ambient Temp. (F):	80	
Plastic Unit Wt. (pcf):	144.0	
Yield (Cu. Yds.):		

Laboratory Test Data

Set No.	Specimen ID	Avg Diam. (in)	Area (sq in)	Date Received	Specimen Weight (lbs)	Date Tested	Age at Test (days)	Maximum Load (lbs)	Compressive Strength (psi)	Fracture Type
3	A	4.00	12.57	08/25/15	8.42	08/28/15	3	23,570	1,880	2
3	B	4.00	12.57	08/25/15	8.44	09/01/15	7	31,290	2,490	4
3	C	4.00	12.57	08/25/15	8.53	09/22/15	28	42,850	3,410	2
3	D	4.00	12.57	08/25/15	8.53	09/22/15	28	45,900	3,650	3
							Average (28 days)		**3,530**	

Comments: **Average compressive strength of 28 day cylinders complies with the specified strength.**
n/a

Samples Made By: Terracon
Services:

Terracon Rep.: Kerry Cobb
Reported To: Ellis Bennett with Taylor Corporation
Contractor:
Report Distribution:
(1) Taylor Corporation, Emailed
(1) Brown Construction & Development, Emailed

Start/Stop:

Reviewed By: Anthony Cheatwood
Project Manager II

Test Methods: ASTM C 31, ASTM C39, ASTM C138, ASTM C143, ASTM C172, ASTM C1064

The tests were performed in general accordance with applicable ASTM, AASHTO, or DOT test methods. This report is exclusively for the use of the client indicated above and shall not be reproduced except in full without the written consent of our company. Test results transmitted herein are only applicable to the actual samples tested at the location(s) referenced and are not necessarily indicative of the properties of other apparently similar or identical materials.

CONCRETE COMPRESSIVE STRENGTH TEST REPORT

Report Number: E1151124.0002
Service Date: 08/21/15
Report Date: 09/18/15 Revision 2 - 28-day results
Task:

Terracon
110 12th St. North
Birmingham, AL 35203
205-942-1289

Client

Brown Construction & Development
Attn: Robby Brown
225 Campbell Street
Heflin, AL 36264

Project

Solutia OU-3 Remediation
Clydesdale Avenue
Anniston, AL

Project Number: E1151124

Material Information

Specified Strength: 3,000 psi @ 28 days

Mix ID: RM3002
Supplier: Webb
Batch Time: 0800 **Plant:** 202
Truck No.: 109 **Ticket No.:** 110907

Sample Information

Sample Date: 08/21/15 **Sample Time:** 0900
Sampled By: Kerry Cobb
Weather Conditions: clear
Accumulative Yards: 18 **Batch Size (cy):** 9
Placement Method: Pump
Water Added Before (gal): 10
Water Added After (gal): 0 **Slump After (in):** 6
Sample Location: autoclave area - see drawing
Placement Location: same

Field Test Data

Test	Result	Specification
Slump (in):	6	4 - 6
Air Content (%):	2.0	
Concrete Temp. (F):	82	
Ambient Temp. (F):	80	
Plastic Unit Wt. (pcf):	148.6	
Yield (Cu. Yds.):		

Laboratory Test Data

Set No.	Specimen ID	Avg Diam. (in)	Area (sq in)	Date Received	Specimen Weight (lbs)	Date Tested	Age at Test (days)	Maximum Load (lbs)	Compressive Strength (psi)		Fracture Type
2	a	4.00	12.57	08/22/15	8.16	08/24/15	3	18,990	1,510		2
2	b	4.00	12.57	08/22/15	8.12	08/28/15	7	20,930	1,670		2
2	c	4.00	12.57	08/22/15	8.32	09/18/15	28	30,790	2,450		2
2	d	4.00	12.57	08/22/15	8.34	09/18/15	28	30,800	2,450		2
							Average (28 days)		**2,450**	*	

Comments: *** Average compressive strength of 28 day cylinders does not comply with the specified strength.**
n/a

Samples Made By: Terracon
Services:

Terracon Rep.: Kerry Cobb
Reported To: Robby Brown with Brown Construction
Contractor:
Report Distribution:
(1) Brown Construction & Development, Emailed (1) Taylor Corporation, Emailed

Start/Stop:

Reviewed By: Anthony Cheatwood
Project Manager II

Test Methods: ASTM C 31, ASTM C39, ASTM C138, ASTM C143, ASTM C172, ASTM C1064

The tests were performed in general accordance with applicable ASTM, AASHTO, or DOT test methods. This report is exclusively for the use of the client indicated above and shall not be reproduced except in full without the written consent of our company. Test results transmitted herein are only applicable to the actual samples tested at the location(s) referenced and are not necessarily indicative of the properties of other apparently similar or identical materials.

DEVIATION LOG

Report Date: 9/18/2015

Terracon
110 12th St. North
Birmingham, AL 35203
205-942-1289

Client

Brown Construction & Development
Attn: Robby Brown
225 Campbell Street
Heflin, AL 36264

Project

Solutia OU-3 Remediation
Clydesdale Avenue
Anniston, AL

Project Number: E1151124

Deviation No.	Report No.	Service	Service Date	Description/Comments	How Resolved	Date Resolved	Status
D000001	0002	Concrete Compressive Strength Test	08/21/15	Average compressive strength does not comply, Set 2 Age 28			Open

CONCRETE COMPRESSIVE STRENGTH TEST REPORT

Report Number: E1151124.0002
Service Date: 08/21/15
Report Date: 09/18/15 Revision 2 - 28-day results
Task:

Terracon
110 12th St. North
Birmingham, AL 35203
205-942-1289

Client

Brown Construction & Development
Attn: Robby Brown
225 Campbell Street
Heflin, AL 36264

Project

Solutia OU-3 Remediation
Clydesdale Avenue
Anniston, AL

Project Number: E1151124

Material Information

Specified Strength: 3,000 psi @ 28 days

Mix ID: RM3002
Supplier: Webb
Batch Time: 0630 **Plant:** 202
Truck No.: 138 **Ticket No.:** 11089

Sample Information

Sample Date: 08/21/15 **Sample Time:** 0730
Sampled By: Contractor
Weather Conditions: p.cloudy
Accumulative Yards: 9 **Batch Size (cy):** 9
Placement Method: Pump
Water Added Before (gal):
Water Added After (gal): 45
Sample Location: Autoclave area see drawing
Placement Location: same

Field Test Data

Test	Result	Specification
Slump (in):		4 - 6
Air Content (%):		
Concrete Temp. (F):		
Ambient Temp. (F):		
Plastic Unit Wt. (pcf):		
Yield (Cu. Yds.):		

Laboratory Test Data

Set No.	Specimen ID	Avg Diam. (in)	Area (sq in)	Date Received	Specimen Weight (lbs)	Date Tested	Age at Test (days)	Maximum Load (lbs)	Compressive Strength (psi)	Fracture Type
1	A	6.00	28.27	08/22/15	28.90	08/24/15	3	79,700	2,820	2
1	B	6.00	28.27	08/22/15	29.17	08/28/15	7	84,960	3,010	2
1	C	6.00	28.27	08/22/15	29.71	09/18/15	28	108,940	3,850	2
1	D			08/22/15			Hold			

Comments: **Compressive strength of 28 day cylinders complies with the specified strength. Not tested for plastic unit weight.** cylinders cast by contractor

Samples Made By: Terracon
Services:

Terracon Rep.: Kerry Cobb
Reported To: Robby Brown with Brown Construction
Contractor:
Report Distribution:
(1) Brown Construction & Development, Emailed (1) Taylor Corporation, Emailed

Start/Stop:

Reviewed By: Anthony Cheatwood
Project Manager II

Test Methods: ASTM C 31, ASTM C39, ASTM C138, ASTM C143, ASTM C172, ASTM C1064

The tests were performed in general accordance with applicable ASTM, AASHTO, or DOT test methods. This report is exclusively for the use of the client indicated above and shall not be reproduced except in full without the written consent of our company. Test results transmitted herein are only applicable to the actual samples tested at the location(s) referenced and are not necessarily indicative of the properties of other apparently similar or identical materials.

CONCRETE COMPRESSIVE STRENGTH TEST REPORT

Report Number: E1151124.0002
Service Date: 08/21/15
Report Date: 09/18/15 Revision 2 - 28-day results
Task:

Terracon
110 12th St. North
Birmingham, AL 35203
205-942-1289

Client

Brown Construction & Development
Attn: Robby Brown
225 Campbell Street
Heflin, AL 36264

Project

Solutia OU-3 Remediation
Clydesdale Avenue
Anniston, AL

Project Number: E1151124

Material Information

Specified Strength: 3,000 psi @ 28 days

Mix ID: RM3002
Supplier: Webb
Batch Time: 0800 **Plant:** 202
Truck No.: 109 **Ticket No.:** 110907

Sample Information

Sample Date: 08/21/15 **Sample Time:** 0900
Sampled By: Kerry Cobb
Weather Conditions: clear
Accumulative Yards: 18 **Batch Size (cy):** 9
Placement Method: Pump
Water Added Before (gal): 10
Water Added After (gal): 0 **Slump After (in):** 6
Sample Location: autoclave area - see drawing
Placement Location: same

Field Test Data

Test	Result	Specification
Slump (in):	6	4 - 6
Air Content (%):	2.0	
Concrete Temp. (F):	82	
Ambient Temp. (F):	80	
Plastic Unit Wt. (pcf):	148.6	
Yield (Cu. Yds.):		

Laboratory Test Data

Set No.	Specimen ID	Avg Diam. (in)	Area (sq in)	Date Received	Specimen Weight (lbs)	Date Tested	Age at Test (days)	Maximum Load (lbs)	Compressive Strength (psi)		Fracture Type
2	a	4.00	12.57	08/22/15	8.16	08/24/15	3	18,990	1,510		2
2	b	4.00	12.57	08/22/15	8.12	08/28/15	7	20,930	1,670		2
2	c	4.00	12.57	08/22/15	8.32	09/18/15	28	30,790	2,450		2
2	d	4.00	12.57	08/22/15	8.34	09/18/15	28	30,800	2,450		2
							Average (28 days)		**2,450**	*	

Comments: *** Average compressive strength of 28 day cylinders does not comply with the specified strength.**
n/a

Samples Made By: Terracon
Services:

Terracon Rep.: Kerry Cobb
Reported To: Robby Brown with Brown Construction
Contractor:
Report Distribution:
(1) Brown Construction & Development, Emailed (1) Taylor Corporation, Emailed

Start/Stop:

Reviewed By: Anthony Cheatwood
Project Manager II

Test Methods: ASTM C 31, ASTM C39, ASTM C138, ASTM C143, ASTM C172, ASTM C1064

The tests were performed in general accordance with applicable ASTM, AASHTO, or DOT test methods. This report is exclusively for the use of the client indicated above and shall not be reproduced except in full without the written consent of our company. Test results transmitted herein are only applicable to the actual samples tested at the location(s) referenced and are not necessarily indicative of the properties of other apparently similar or identical materials.

DEVIATION LOG

Report Date: 9/18/2015

Terracon
110 12th St. North
Birmingham, AL 35203
205-942-1289

Client

Brown Construction & Development
Attn: Robby Brown
225 Campbell Street
Heflin, AL 36264

Project

Solutia OU-3 Remediation
Clydesdale Avenue
Anniston, AL

Project Number: E1151124

Deviation No.	Report No.	Service	Service Date	Description/Comments	How Resolved	Date Resolved	Status
D000001	0002	Concrete Compressive Strength Test	08/21/15	Average compressive strength does not comply, Set 2 Age 28			Open

CONCRETE SAMPLE PICK-UP REPORT

Report Number: E1151124.0015
Service Date: 08/29/15
Report Date: 08/31/15

Terracon
110 12th St. North
Birmingham, AL 35203
205-942-1289

Client

Brown Construction & Development
Attn: Robby Brown
225 Campbell Street
Heflin, AL 36264

Project

Solutia OU-3 Remediation
Clydesdale Avenue
Anniston, AL

Project Number: E1151124

Sample Type: 4 x 8 cylinders

Date Cast: 08-28-2015

1 set of 4 samples per set was retrieved and transported to our laboratory and placed in a temperature and humidity-controlled environment for compressive strength testing.

Services:

Terracon Rep.: Kerry Cobb
Reported To: Robby Brown with Brown Construction
Contractor:
Report Distribution:
(1) Brown Construction & Development, Emailed
(1) Taylor Corporation, Emailed

Start/Stop:

Reviewed By: Anthony Cheatwood

The tests were performed in general accordance with applicable ASTM, AASHTO, or DOT test methods. This report is exclusively for the use of the client indicated above and shall not be reproduced except in full without the written consent of our company. Test results transmitted herein are only applicable to the actual samples tested at the location(s) referenced and are not necessarily indicative of the properties of other apparently similar or identical materials.

CONCRETE SAMPLE PICK-UP REPORT

Report Number: E1151124.0014
Service Date: 08/28/15
Report Date: 09/01/15

Terracon
110 12th St. North
Birmingham, AL 35203
205-942-1289

Client

Brown Construction & Development
Attn: Robby Brown
225 Campbell Street
Heflin, AL 36264

Project

Solutia OU-3 Remediation
Clydesdale Avenue
Anniston, AL

Project Number: E1151124

Sample Type: 4 x 8 cylinders

Date Cast: 08-27-2015

1 set of 5 samples per set was retrieved and transported to our laboratory and placed in a temperature and humidity-controlled environment for compressive strength testing.

Services:

Terracon Rep.: Anthony Cheatwood
Reported To: Robby Brown with Brown Construction
Contractor:
Report Distribution:
(1) Brown Construction & Development, Emailed
(1) Taylor Corporation, Emailed

Start/Stop:

Reviewed By: Christopher L. Roberts

Chris Roberts
Senior Project Engineer

The tests were performed in general accordance with applicable ASTM, AASHTO, or DOT test methods. This report is exclusively for the use of the client indicated above and shall not be reproduced except in full without the written consent of our company. Test results transmitted herein are only applicable to the actual samples tested at the location(s) referenced and are not necessarily indicative of the properties of other apparently similar or identical materials.

CONCRETE COMPRESSIVE STRENGTH TEST REPORT

Report Number: E1151124.0013
Service Date: 08/28/15
Report Date: 09/08/15 Revision 1 - 7-day results
Task:

Terracon
110 12th St. North
Birmingham, AL 35203
205-942-1289

Client

Brown Construction & Development
Attn: Robby Brown
225 Campbell Street
Heflin, AL 36264

Project

Solutia OU-3 Remediation
Clydesdale Avenue
Anniston, AL

Project Number: E1151124

Material Information

Specified Strength: 3,000 psi @ 28 days

Mix ID: RM3002
Supplier: Webb
Batch Time: 0930 **Plant:** 202
Truck No.: 106 **Ticket No.:** 111238

Sample Information

Sample Date: 08/28/15 **Sample Time:** 1000
Sampled By: Kerry Cobb
Weather Conditions: p.cloudy
Accumulative Yards: 8 **Batch Size (cy):** 8
Placement Method: Chute
Water Added Before (gal): 0
Water Added After (gal): 0 **Slump After (in):** 3
Sample Location: Autoclave area slab see drawing
Placement Location: same

Field Test Data

Test	Result	Specification
Slump (in):	3	
Air Content (%):	6.0	
Concrete Temp. (F):	83	
Ambient Temp. (F):	82	
Plastic Unit Wt. (pcf):	144.4	
Yield (Cu. Yds.):		

Laboratory Test Data

Set No.	Specimen ID	Avg Diam. (in)	Area (sq in)	Date Received	Specimen Weight (lbs)	Date Tested	Age at Test (days)	Maximum Load (lbs)	Compressive Strength (psi)	Fracture Type
6	A	4.00	12.57	08/28/15	8.43	08/31/15	3	38,220	3,040	3
6	B	4.00	12.57	08/28/15	8.52	09/04/15	7	43,540	3,470	2
6	C	4.00	12.57	08/28/15		09/25/15	28			
6	D	4.00	12.57	08/28/15		09/25/15	28			

Comments: n/a

Samples Made By: Terracon
Services:

Terracon Rep.: Kerry Cobb
Reported To: Ellis Bennett with Taylor Corporation
Contractor:
Report Distribution:
(1) Brown Construction & Development, Emailed (1) Taylor Corporation, Emailed

Start/Stop:

Reviewed By: Anthony Cheatwood

Test Methods: ASTM C 31, ASTM C39, ASTM C138, ASTM C143, ASTM C172, ASTM C1064

The tests were performed in general accordance with applicable ASTM, AASHTO, or DOT test methods. This report is exclusively for the use of the client indicat above and shall not be reproduced except in full without the written consent of our company. Test results transmitted herein are only applicable to the actual sam tested at the location(s) referenced and are not necessarily indicative of the properties of other apparently similar or identical materials.

CONCRETE COMPRESSIVE STRENGTH TEST REPORT

Report Number: E1151124.0013
Service Date: 08/28/15
Report Date: 09/03/15
Task:

Terracon
110 12th St. North
Birmingham, AL 35203
205-942-1289

Client

Brown Construction & Development
Attn: Robby Brown
225 Campbell Street
Heflin, AL 36264

Project

Solutia OU-3 Remediation
Clydesdale Avenue
Anniston, AL

Project Number: E1151124

Material Information

Specified Strength: 3,000 psi @ 28 days

Mix ID: RM3002
Supplier: Webb
Batch Time: 0930 **Plant:** 202
Truck No.: 106 **Ticket No.:** 111238

Sample Information

Sample Date: 08/28/15 **Sample Time:** 1000
Sampled By: Kerry Cobb
Weather Conditions: p.cloudy
Accumulative Yards: 8 **Batch Size (cy):** 8
Placement Method: Chute
Water Added Before (gal): 0
Water Added After (gal): 0 **Slump After (in):** 3
Sample Location: Autoclave area slab see drawing
Placement Location: same

Field Test Data

Test	Result	Specification
Slump (in):	3	
Air Content (%):	6.0	
Concrete Temp. (F):	83	
Ambient Temp. (F):	82	
Plastic Unit Wt. (pcf):	144.4	
Yield (Cu. Yds.):		

Laboratory Test Data

Set No.	Specimen ID	Avg Diam. (in)	Area (sq in)	Date Received	Specimen Weight (lbs)	Date Tested	Age at Test (days)	Maximum Load (lbs)	Compressive Strength (psi)	Fracture Type
6	A	4.00	12.57	08/28/15	8.43	08/31/15	3	38,220	3,040	3
6	B	4.00	12.57	08/28/15		09/04/15	7			
6	C	4.00	12.57	08/28/15		09/25/15	28			
6	D	4.00	12.57	08/28/15		09/25/15	28			

Comments: n/a

Samples Made By: Terracon
Services:

Terracon Rep.: Kerry Cobb
Reported To: Ellis Bennett with Taylor Corporation
Contractor:
Report Distribution:
(1) Brown Construction & Development, Emailed (1) Taylor Corporation, Emailed

Start/Stop:

Reviewed By: Anthony Cheatwood

Test Methods: ASTM C 31, ASTM C39, ASTM C138, ASTM C143, ASTM C172, ASTM C1064

The tests were performed in general accordance with applicable ASTM, AASHTO, or DOT test methods. This report is exclusively for the use of the client indicated above and shall not be reproduced except in full without the written consent of our company. Test results transmitted herein are only applicable to the actual samples tested at the location(s) referenced and are not necessarily indicative of the properties of other apparently similar or identical materials.

CONCRETE OBSERVATION REPORT

Report Number: E1151124.0012
Service Date: 08/28/15
Report Date: 08/28/15

Terracon
110 12th St. North
Birmingham, AL 35203
205-942-1289

Client

Brown Construction & Development
Attn: Robby Brown
225 Campbell Street
Heflin, AL 36264

Project

Solutia OU-3 Remediation
Clydesdale Avenue
Anniston, AL

Project Number: E1151124

Services Requested By:	Robby Brown with Brown Construction Company
Concrete Contractor:	Brown Construction Company
Concrete Placement:	Slab-on-grade
Observation Location(s):	Autoclave area see drawing
Concrete Type:	3000-psi, air-entrained concrete (Mix ID: RM3002)
Method of Placement:	Chute
Method of Consolidation:	Vibratory screed
Tests Performed:	Concrete slump, air, temperature and unit weight measurements were performed and the results were in accordance with project specifications.
Test Specimens Fabricated:	A total of 4 compressive strength specimens [Set No(s).: 1] were fabricated during today's concrete activities.
Summary:	Based on our observations, cast-in-place concrete construction activities at the above-referenced locations appeared to be completed in general accordance with the project plans and specifications.

Services:

Terracon Rep.: Kerry Cobb
Reported To: Ellis Bennett with Taylor Corporation
Contractor:
Report Distribution:
(1) Brown Construction & Development, Emailed
(1) Taylor Corporation, Emailed

Started
Finished:

Reviewed By: Anthony Cheatwood

The tests were performed in general accordance with applicable ASTM, AASHTO, or DOT test methods. This report is exclusively for the use of the client indicated above and shall not be reproduced except in full without the written consent of our company. Test results transmitted herein are only applicable to the actual samples tested at the location(s) referenced and are not necessarily indicative of the properties of other apparently similar or identical materials.

E115124.0012

CONCRETE PLACEMENT LOCATIONS

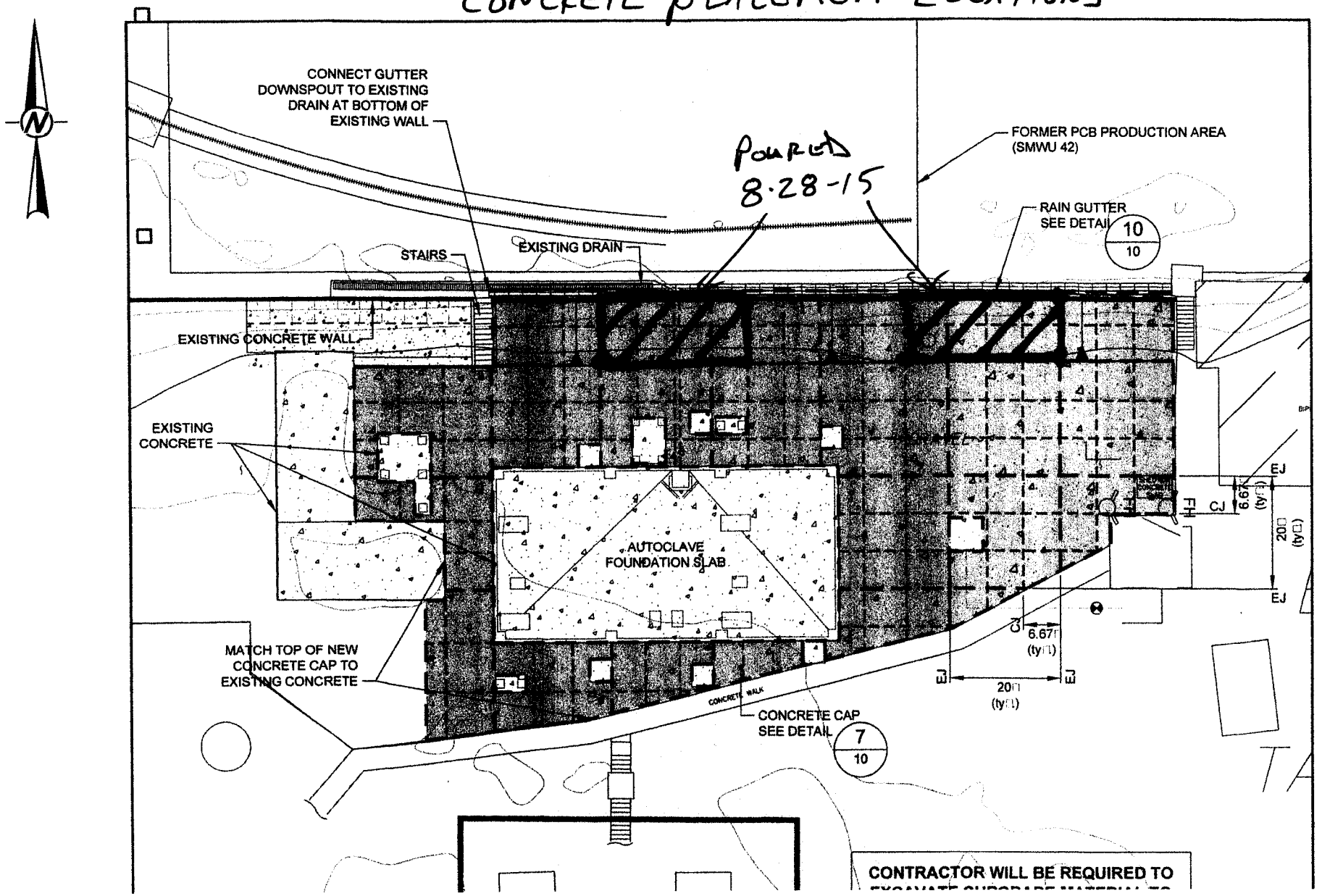

CONCRETE SAMPLE PICK-UP REPORT

Report Number: E1151124.0011
Service Date: 08/27/15
Report Date: 08/28/15

Terracon
110 12th St. North
Birmingham, AL 35203
205-942-1289

Client

Brown Construction & Development
Attn: Robby Brown
225 Campbell Street
Heflin, AL 36264

Project

Solutia OU-3 Remediation
Clydesdale Avenue
Anniston, AL

Project Number: E1151124

Sample Type: 4x8 concrete cylinders

Date Cast: 8/26/15

1 set of 4 samples per set was retrieved and transported to our laboratory and placed in a temperature and humidity-controlled environment for compressive strength testing.

Services:

Terracon Rep.: Kerry Cobb
Reported To: Ellis Bennett with Taylor Corporation
Contractor:
Report Distribution:
(1) Brown Construction & Development, Emailed
(1) Taylor Corporation, Emailed

Start/Stop:

Reviewed By: Anthony Cheatwood

The tests were performed in general accordance with applicable ASTM, AASHTO, or DOT test methods. This report is exclusively for the use of the client indicated above and shall not be reproduced except in full without the written consent of our company. Test results transmitted herein are only applicable to the actual samples tested at the location(s) referenced and are not necessarily indicative of the properties of other apparently similar or identical materials.

CONCRETE COMPRESSIVE STRENGTH TEST REPORT

Report Number: E1151124.0010
Service Date: 08/27/15
Report Date: 09/08/15 Revision 1 - 7-day results
Task:

Terracon
110 12th St. North
Birmingham, AL 35203
205-942-1289

Client

Brown Construction & Development
Attn: Robby Brown
225 Campbell Street
Heflin, AL 36264

Project

Solutia OU-3 Remediation
Clydesdale Avenue
Anniston, AL

Project Number: E1151124

Material Information

Specified Strength: 3,000 psi @ 28 days

Mix ID: RM3002
Supplier: Webb
Batch Time: 1030 **Plant:** 202
Truck No.: 71 **Ticket No.:** 111163

Sample Information

Sample Date: 08/27/15 **Sample Time:** 1100
Sampled By: Kerry Cobb
Weather Conditions: clear
Accumulative Yards: 9 **Batch Size (cy):** 9
Placement Method: Direct Discharge
Water Added Before (gal): 0
Water Added After (gal): 0 **Slump After (in):** 4
Sample Location: Autoclave area see drawing
Placement Location: same

Field Test Data

Test	Result	Specification
Slump (in):	4	
Air Content (%):	5.5	
Concrete Temp. (F):	82	
Ambient Temp. (F):	80	
Plastic Unit Wt. (pcf):	144.3	
Yield (Cu. Yds.):		

Laboratory Test Data

Set No.	Specimen ID	Avg Diam. (in)	Area (sq in)	Date Received	Specimen Weight (lbs)	Date Tested	Age at Test (days)	Maximum Load (lbs)	Compressive Strength (psi)	Fracture Type
5	A	4.00	12.57	08/28/15	8.54	08/31/15	4	34,230	2,720	3
5	B	4.00	12.57	08/28/15	8.48	09/03/15	7	39,980	3,180	2
5	C	4.00	12.57	08/28/15		09/24/15	28			
5	D	4.00	12.57	08/28/15		09/24/15	28			

Comments: n/a

Samples Made By: Terracon
Services:

Terracon Rep.: Kerry Cobb
Reported To: Ellis Bennett with Taylor Corporation
Contractor:
Report Distribution:
(1) Brown Construction & Development, Emailed (1) Taylor Corporation, Emailed

Start/Stop:

Reviewed By: No PM Assigned

Test Methods:

The tests were performed in general accordance with applicable ASTM, AASHTO, or DOT test methods. This report is exclusively for the use of the client indicat above and shall not be reproduced except in full without the written consent of our company. Test results transmitted herein are only applicable to the actual sam tested at the location(s) referenced and are not necessarily indicative of the properties of other apparently similar or identical materials.

CONCRETE COMPRESSIVE STRENGTH TEST REPORT

Report Number: E1151124.0010
Service Date: 08/27/15
Report Date: 09/03/15
Task:

Terracon
110 12th St. North
Birmingham, AL 35203
205-942-1289

Client

Brown Construction & Development
Attn: Robby Brown
225 Campbell Street
Heflin, AL 36264

Project

Solutia OU-3 Remediation
Clydesdale Avenue
Anniston, AL

Project Number: E1151124

Material Information

Specified Strength: 3,000 psi @ 28 days

Mix ID: RM3002
Supplier: Webb
Batch Time: 1030 **Plant:** 202
Truck No.: 71 **Ticket No.:** 111163

Sample Information

Sample Date: 08/27/15 **Sample Time:** 1100
Sampled By: Kerry Cobb
Weather Conditions: clear
Accumulative Yards: 9 **Batch Size (cy):** 9
Placement Method: Direct Discharge
Water Added Before (gal): 0
Water Added After (gal): 0 **Slump After (in):** 4
Sample Location: Autoclave area see drawing
Placement Location: same

Field Test Data

Test	Result	Specification
Slump (in):	4	
Air Content (%):	5.5	
Concrete Temp. (F):	82	
Ambient Temp. (F):	80	
Plastic Unit Wt. (pcf):	144.3	
Yield (Cu. Yds.):		

Laboratory Test Data

Set No.	Specimen ID	Avg Diam. (in)	Area (sq in)	Date Received	Specimen Weight (lbs)	Date Tested	Age at Test (days)	Maximum Load (lbs)	Compressive Strength (psi)	Fracture Type
5	A	4.00	12.57	08/28/15	8.54	08/31/15	4	34,230	2,720	3
5	B	4.00	12.57	08/28/15		09/03/15	7			
5	C	4.00	12.57	08/28/15		09/24/15	28			
5	D	4.00	12.57	08/28/15		09/24/15	28			

Comments: n/a

Samples Made By: Terracon
Services:

Terracon Rep.: Kerry Cobb
Reported To: Ellis Bennett with Taylor Corporation
Contractor:
Report Distribution:
(1) Brown Construction & Development, Emailed (1) Taylor Corporation, Emailed

Start/Stop:

Reviewed By: No PM Assigned

Test Methods:

The tests were performed in general accordance with applicable ASTM, AASHTO, or DOT test methods. This report is exclusively for the use of the client indicated above and shall not be reproduced except in full without the written consent of our company. Test results transmitted herein are only applicable to the actual samples tested at the location(s) referenced and are not necessarily indicative of the properties of other apparently similar or identical materials.

CONCRETE OBSERVATION REPORT

Report Number: E1151124.0009
Service Date: 08/27/15
Report Date: 08/28/15

Terracon
110 12th St. North
Birmingham, AL 35203
205-942-1289

Client

Brown Construction & Development
Attn: Robby Brown
225 Campbell Street
Heflin, AL 36264

Project

Solutia OU-3 Remediation
Clydesdale Avenue
Anniston, AL

Project Number: E1151124

Services Requested By:	Robby Brown with Brown Construction
Concrete Contractor:	Brown Construction
Concrete Placement:	Slab-on-grade
Observation Location(s):	Autoclave area see drawing
Concrete Type:	3000-psi, air-entrained concrete (Mix ID: RM3002)
Method of Placement:	Chute
Method of Consolidation:	Vibratory screed
Tests Performed:	Concrete slump, air, temperature and unit weight measurements were performed and the results were in accordance with project specifications.
Test Specimens Fabricated:	A total of 4 compressive strength specimens [Set No(s).: 1] were fabricated during today's concrete activities.
Summary:	Based on our observations, cast-in-place concrete construction activities at the above-referenced locations appeared to be completed in general accordance with the project plans and specifications.

Services:

Terracon Rep.: Kerry Cobb
Reported To: Ellis Bennett with Taylor Corporation
Contractor:
Report Distribution:
(1) Brown Construction & Development, Emailed
(1) Taylor Corporation, Emailed

Started
Finished:

Reviewed By:

Anthony Cheatwood
Project Manager II

The tests were performed in general accordance with applicable ASTM, AASHTO, or DOT test methods. This report is exclusively for the use of the client indicated above and shall not be reproduced except in full without the written consent of our company. Test results transmitted herein are only applicable to the actual samples tested at the location(s) referenced and are not necessarily indicative of the properties of other apparently similar or identical materials.

E1151124.0009

CONCRETE PLACEMENT LOCATIONS

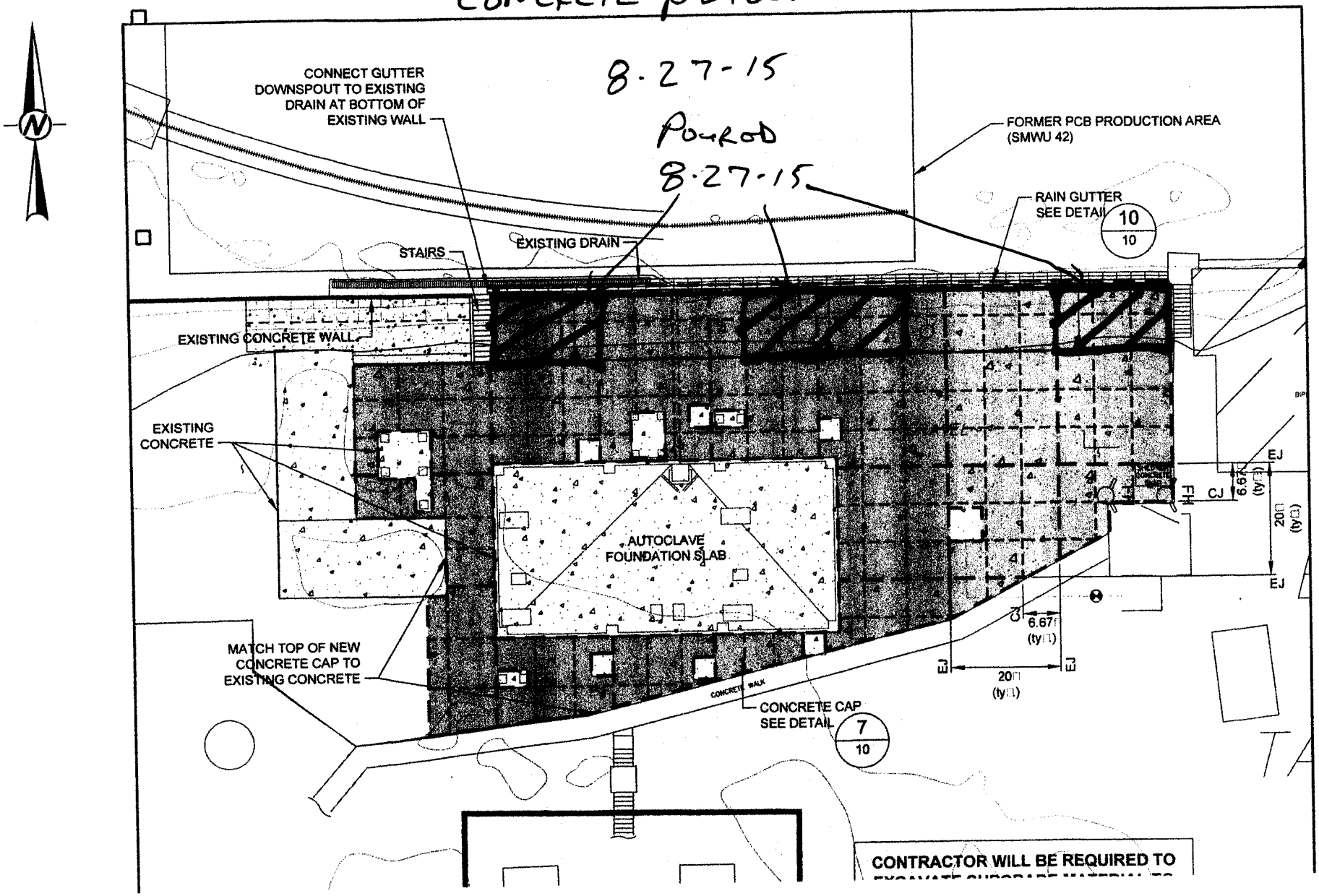

CONCRETE OBSERVATION REPORT

Report Number: E1151124.0008
Service Date: 08/26/15
Report Date: 08/28/15

Terracon
110 12th St. North
Birmingham, AL 35203
205-942-1289

Client

Brown Construction & Development
Attn: Robby Brown
225 Campbell Street
Heflin, AL 36264

Project

Solutia OU-3 Remediation
Clydesdale Avenue
Anniston, AL

Project Number: E1151124

Services Requested By:	Robby Brown with Brown Construction
Concrete Contractor:	Brown Construction
Concrete Placement:	Slab-on-grade
Observation Location(s):	Autoclave area see drawing
Concrete Type:	3000-psi, air-entrained concrete supplied by Webb (Mix ID: RM3002)
Method of Placement:	Pump
Method of Consolidation:	Vibratory screed
Tests Performed:	Concrete slump, air, temperature and unit weight measurements were performed and the results were in accordance with project specifications.
Test Specimens Fabricated:	A total of 4 compressive strength specimens [Set No(s).: 1] were fabricated during today's concrete activities.
Summary:	Based on our observations, cast-in-place concrete construction activities at the above-referenced locations appeared to be completed in general accordance with the project plans and specifications.

Services:

Terracon Rep.: Kerry Cobb
Reported To: Ellis Bennett with Taylor Corporation
Contractor:
Report Distribution:
(1) Brown Construction & Development, Emailed
(1) Taylor Corporation, Emailed

Started
Finished:

Reviewed By:

Anthony Cheatwood
Project Manager II

The tests were performed in general accordance with applicable ASTM, AASHTO, or DOT test methods. This report is exclusively for the use of the client indicated above and shall not be reproduced except in full without the written consent of our company. Test results transmitted herein are only applicable to the actual samples tested at the location(s) referenced and are not necessarily indicative of the properties of other apparently similar or identical materials.

E1151124.0008

CONCRETE PLACEMENT LOCATIONS

8-26-15

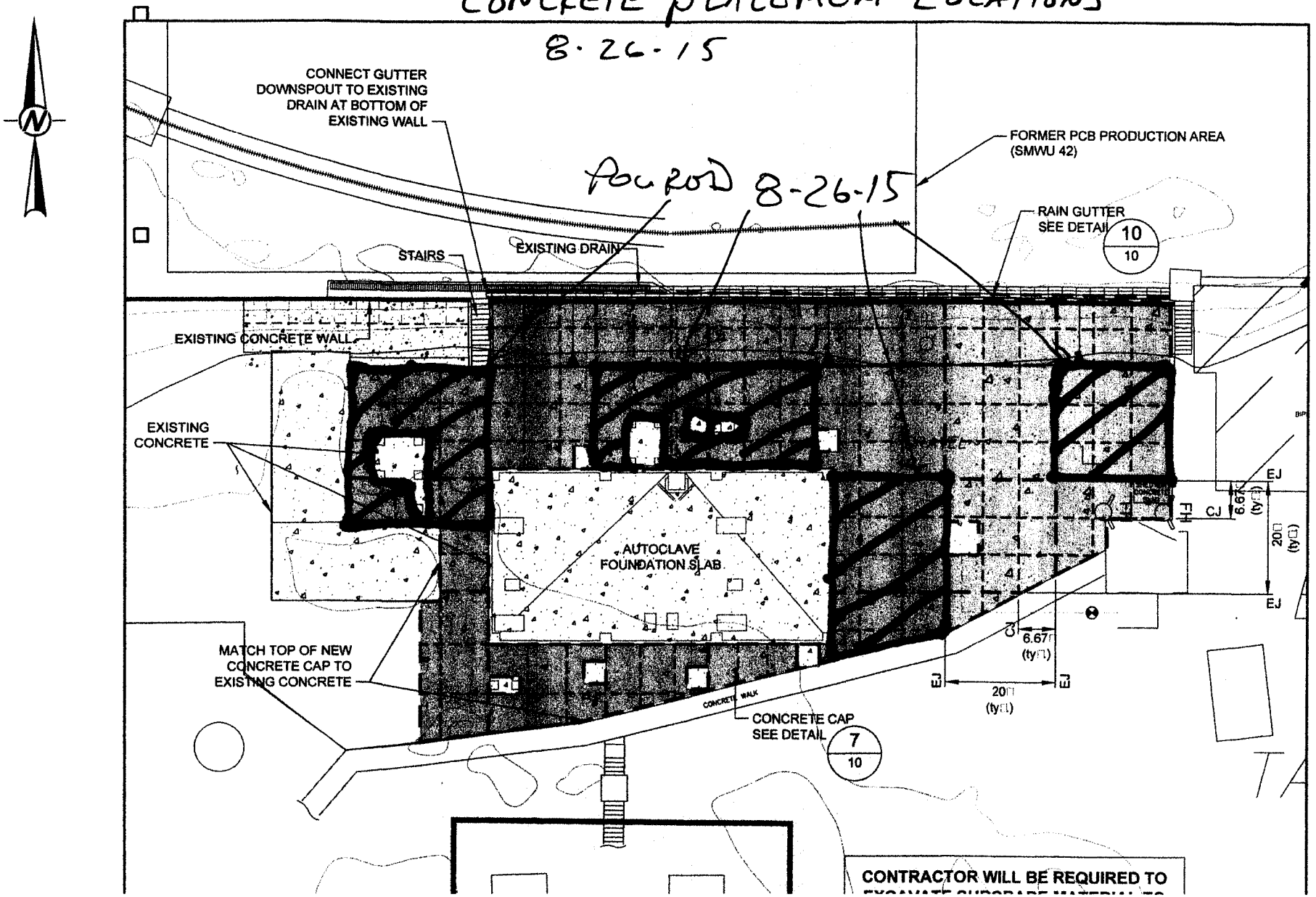

CONCRETE COMPRESSIVE STRENGTH TEST REPORT

Report Number: E1151124.0007
Service Date: 08/26/15
Report Date: 09/03/15
Task:

Terracon
110 12th St. North
Birmingham, AL 35203
205-942-1289

Client

Brown Construction & Development
Attn: Robby Brown
225 Campbell Street
Heflin, AL 36264

Project

Solutia OU-3 Remediation
Clydesdale Avenue
Anniston, AL

Project Number: E1151124

Material Information

Specified Strength: 3,000 psi @ 28 days

Mix ID: RM3002
Supplier: Webb
Batch Time: 1230 **Plant:** 202
Truck No.: 31 **Ticket No.:** 111150

Sample Information

Sample Date: 08/26/15 **Sample Time:** 1330
Sampled By: Kerry Cobb
Weather Conditions: clear
Accumulative Yards: 9 **Batch Size (cy):** 9
Placement Method: Pump
Water Added Before (gal): 0
Water Added After (gal): 0 **Slump After (in):** n/a
Sample Location: Autoclave area see drawing
Placement Location: same

Field Test Data

Test	Result	Specification
Slump (in):	5 1/2	
Air Content (%):	6.0	
Concrete Temp. (F):	83	
Ambient Temp. (F):	80	
Plastic Unit Wt. (pcf):	144.1	
Yield (Cu. Yds.):		

Laboratory Test Data

Set No.	Specimen ID	Avg Diam. (in)	Area (sq in)	Date Received	Specimen Weight (lbs)	Date Tested	Age at Test (days)	Maximum Load (lbs)	Compressive Strength (psi)	Fracture Type
4	A	4.00	12.57	08/27/15	8.47	08/31/15	5	28,250	2,250	2
4	B	4.00	12.57	08/27/15	8.48	09/02/15	7	29,680	2,360	2
4	C	4.00	12.57	08/27/15		09/23/15	28			
4	D	4.00	12.57	08/27/15		09/23/15	28			

Comments: n/a

Samples Made By: Terracon
Services:

Terracon Rep.: Kerry Cobb
Reported To: Ellis Bennett with Taylor Corporation
Contractor:
Report Distribution:
(1) Brown Construction & Development, Emailed (1) Taylor Corporation, Emailed

Start/Stop:

Reviewed By: Anthony Cheatwood
Project Manager II

Test Methods: ASTM C 31, ASTM C39, ASTM C138, ASTM C143, ASTM C172, ASTM C1064

The tests were performed in general accordance with applicable ASTM, AASHTO, or DOT test methods. This report is exclusively for the use of the client indicated above and shall not be reproduced except in full without the written consent of our company. Test results transmitted herein are only applicable to the actual samples tested at the location(s) referenced and are not necessarily indicative of the properties of other apparently similar or identical materials.

CONCRETE SAMPLE PICK-UP REPORT

Report Number: E1151124.0006
Service Date: 08/26/15
Report Date: 08/27/15

Terracon
110 12th St. North
Birmingham, AL 35203
205-942-1289

Client

Brown Construction & Development
Attn: Robby Brown
225 Campbell Street
Heflin, AL 36264

Project

Solutia OU-3 Remediation
Clydesdale Avenue
Anniston, AL

Project Number: E1151124

Sample Type: 4x8 concrete cylinders

Date Cast: 8/25/15

1 set(s) of 4 samples per set were retrieved and transported to our laboratory and placed in a temperature and humidity-controlled environment for compressive strength testing.

Services:

Terracon Rep.: Kerry Cobb
Reported To: Ellis Bennett with Taylor Corporation
Contractor:
Report Distribution:
(1) Brown Construction & Development, Emailed

Start/Stop:

Reviewed By:

Anthony Cheatwood
Project Manager II

The tests were performed in general accordance with applicable ASTM, AASHTO, or DOT test methods. This report is exclusively for the use of the client indicated above and shall not be reproduced except in full without the written consent of our company. Test results transmitted herein are only applicable to the actual samples tested at the location(s) referenced and are not necessarily indicative of the properties of other apparently similar or identical materials.

CONCRETE OBSERVATION REPORT

Report Number: E1151124.0005
Service Date: 08/25/15
Report Date: 08/27/15

Terracon
110 12th St. North
Birmingham, AL 35203
205-942-1289

Client

Brown Construction & Development
Attn: Robby Brown
225 Campbell Street
Heflin, AL 36264

Project

Solutia OU-3 Remediation
Clydesdale Avenue
Anniston, AL

Project Number: E1151124

Services Requested By:	Jason with Taylor Corporation
Concrete Contractor:	Brown Construction Inc.
Concrete Placement:	Slab-on-grade
Observation Location(s):	Autoclave area slab replacements see drawing
Concrete Type:	3000-psi, air-entrained concrete supplied by Webb (Mix ID: RM3002)
Method of Placement:	Pump
Method of Consolidation:	Vibratory screed
Tests Performed:	Concrete slump, air, temperature and unit weight measurements were performed and the results were in accordance with project specifications.
Test Specimens Fabricated:	A total of 4 compressive strength specimens [Set No(s).: 1] were fabricated during today's concrete activities.
Summary:	Based on our observations, cast-in-place concrete construction activities at the above-referenced locations appeared to be completed in general accordance with the project plans and specifications. Results were reported to Jason with Taylor Corporation at the completion of today's activities.

Services:

Terracon Rep.: Kerry Cobb
Reported To: Ellis Bennett with Taylor Corporation
Contractor:
Report Distribution:
(1) Brown Construction & Development, Emailed

Started
Finished:

Reviewed By:

Anthony Cheatwood
Project Manager II

The tests were performed in general accordance with applicable ASTM, AASHTO, or DOT test methods. This report is exclusively for the use of the client indicated above and shall not be reproduced except in full without the written consent of our company. Test results transmitted herein are only applicable to the actual samples tested at the location(s) referenced and are not necessarily indicative of the properties of other apparently similar or identical materials.

E115124.0005

CONCRETE PLACEMENT LOCATIONS

8-25-15

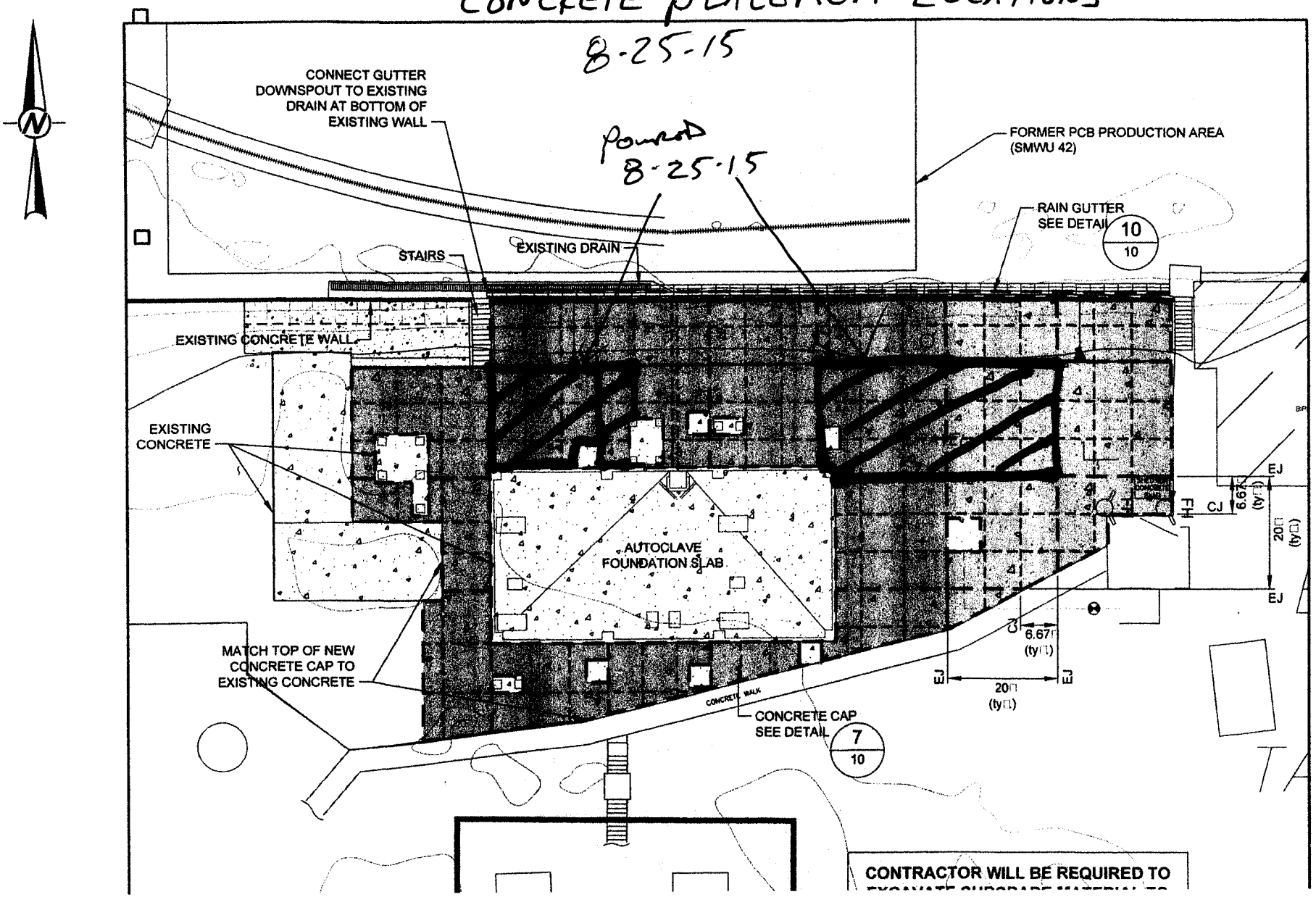

CONCRETE COMPRESSIVE STRENGTH TEST REPORT

Report Number: E1151124.0004
Service Date: 08/25/15
Report Date: 09/03/15 Revision 1 - 7-day results
Task:

Terracon
110 12th St. North
Birmingham, AL 35203
205-942-1289

Client

Brown Construction & Development
Attn: Robby Brown
225 Campbell Street
Heflin, AL 36264

Project

Solutia OU-3 Remediation
Clydesdale Avenue
Anniston, AL

Project Number: E1151124

Material Information

Specified Strength: 3,000 psi @ 28 days

Mix ID: RM3002
Supplier: Webb
Batch Time: 1300 **Plant:** 202
Truck No.: 76 **Ticket No.:** 111036

Sample Information

Sample Date: 08/25/15 **Sample Time:** 1330
Sampled By: Kerry Cobb
Weather Conditions: clear
Accumulative Yards: 9 **Batch Size (cy):** 9
Placement Method: Pump
Water Added Before (gal): 0
Water Added After (gal): 0 **Slump After (in):** 4.5
Sample Location: autoclave area slab see drawing
Placement Location: same

Field Test Data

Test	Result	Specification
Slump (in):	4 1/2	4 - 6
Air Content (%):	6.0	
Concrete Temp. (F):	77	
Ambient Temp. (F):	80	
Plastic Unit Wt. (pcf):	144.0	
Yield (Cu. Yds.):		

Laboratory Test Data

Set No.	Specimen ID	Avg Diam. (in)	Area (sq in)	Date Received	Specimen Weight (lbs)	Date Tested	Age at Test (days)	Maximum Load (lbs)	Compressive Strength (psi)	Fracture Type
3	A	4.00	12.57	08/25/15	8.42	08/28/15	3	23,570	1,880	2
3	B	4.00	12.57	08/25/15	8.44	09/01/15	7	31,290	2,490	4
3	C	4.00	12.57	08/25/15		09/22/15	28			
3	D	4.00	12.57	08/25/15		09/22/15	28			

Comments: n/a

Samples Made By: Terracon
Services:

Terracon Rep.: Kerry Cobb
Reported To: Ellis Bennett with Taylor Corporation
Contractor:
Report Distribution:
(1) Brown Construction & Development, Emailed (1) Taylor Corporation, Emailed

Start/Stop:

Reviewed By: Anthony Cheatwood
Project Manager II

Test Methods: ASTM C 31, ASTM C39, ASTM C138, ASTM C143, ASTM C172, ASTM C1064

The tests were performed in general accordance with applicable ASTM, AASHTO, or DOT test methods. This report is exclusively for the use of the client indicated above and shall not be reproduced except in full without the written consent of our company. Test results transmitted herein are only applicable to the actual samples tested at the location(s) referenced and are not necessarily indicative of the properties of other apparently similar or identical materials.

CONCRETE COMPRESSIVE STRENGTH TEST REPORT

Report Number: E1151124.0004
Service Date: 08/25/15
Report Date: 08/31/15
Task:

Terracon
110 12th St. North
Birmingham, AL 35203
205-942-1289

Client

Brown Construction & Development
Attn: Robby Brown
225 Campbell Street
Heflin, AL 36264

Project

Solutia OU-3 Remediation
Clydesdale Avenue
Anniston, AL

Project Number: E1151124

Material Information

Specified Strength: 3,000 psi @ 28 days

Mix ID: RM3002
Supplier: Webb
Batch Time: 1300 **Plant:** 202
Truck No.: 76 **Ticket No.:** 111036

Sample Information

Sample Date: 08/25/15 **Sample Time:** 1330
Sampled By: Kerry Cobb
Weather Conditions: clear
Accumulative Yards: 9 **Batch Size (cy):** 9
Placement Method: Pump
Water Added Before (gal): 0
Water Added After (gal): 0 **Slump After (in):** 4.5
Sample Location: autoclave area slab see drawing
Placement Location: same

Field Test Data

Test	Result	Specification
Slump (in):	4 1/2	4 - 6
Air Content (%):	6.0	
Concrete Temp. (F):	77	
Ambient Temp. (F):	80	
Plastic Unit Wt. (pcf):	144.0	
Yield (Cu. Yds.):		

Laboratory Test Data

Set No.	Specimen ID	Avg Diam. (in)	Area (sq in)	Date Received	Specimen Weight (lbs)	Date Tested	Age at Test (days)	Maximum Load (lbs)	Compressive Strength (psi)	Fracture Type
3	A	4.00	12.57	08/25/15	8.42	08/28/15	3	23,570	1,880	2
3	B	4.00	12.57	08/25/15		09/01/15	7			
3	C	4.00	12.57	08/25/15		09/22/15	28			
3	D	4.00	12.57	08/25/15		09/22/15	28			

Comments: n/a

Samples Made By: Terracon
Services:

Terracon Rep.: Kerry Cobb
Reported To: Ellis Bennett with Taylor Corporation
Contractor:
Report Distribution:
(1) Brown Construction & Development, Emailed (1) Taylor Corporation, Emailed

Start/Stop:

Reviewed By: Anthony Cheatwood
Project Manager II

Test Methods: ASTM C 31, ASTM C39, ASTM C138, ASTM C143, ASTM C172, ASTM C1064

The tests were performed in general accordance with applicable ASTM, AASHTO, or DOT test methods. This report is exclusively for the use of the client indicated above and shall not be reproduced except in full without the written consent of our company. Test results transmitted herein are only applicable to the actual samples tested at the location(s) referenced and are not necessarily indicative of the properties of other apparently similar or identical materials.

CONCRETE SAMPLE PICK-UP REPORT

Report Number: E1151124.0003
Service Date: 08/22/15
Report Date: 08/25/15

Terracon
110 12th St. North
Birmingham, AL 35203
205-942-1289

Client

Brown Construction & Development
Attn: Robby Brown
225 Campbell Street
Heflin, AL 36264

Project

Solutia
,

Project Number: E1151124

Sample Type: 4x8 – 1 set, 6x12 – 1 set - concrete cylinders

Date Cast: 8/21/15

2 set(s) of 4 samples per set were retrieved and transported to our laboratory and placed in a temperature and humidity-controlled environment for compressive strength testing.

Services:

Terracon Rep.: Kerry Cobb
Reported To: Robby Brown with Brown Construction
Contractor:
Report Distribution:
(1) Brown Construction & Development, Emailed

Start/Stop:

Reviewed By:

Anthony Cheatwood
Project Manager II

The tests were performed in general accordance with applicable ASTM, AASHTO, or DOT test methods. This report is exclusively for the use of the client indicated above and shall not be reproduced except in full without the written consent of our company. Test results transmitted herein are only applicable to the actual samples tested at the location(s) referenced and are not necessarily indicative of the properties of other apparently similar or identical materials.

CONCRETE COMPRESSIVE STRENGTH TEST REPORT

Report Number: E1151124.0002
Service Date: 08/21/15
Report Date: 08/31/15 Revision 1 - 7-day results
Task:

Terracon
110 12th St. North
Birmingham, AL 35203
205-942-1289

Client

Brown Construction & Development
Attn: Robby Brown
225 Campbell Street
Heflin, AL 36264

Project

Solutia OU-3 Remediation
Clydesdale Avenue
Anniston, AL

Project Number: E1151124

Material Information

Specified Strength: 3,000 psi @ 28 days

Mix ID: RM3002
Supplier: Webb
Batch Time: 0630 **Plant:** 202
Truck No.: 138 **Ticket No.:** 11089

Sample Information

Sample Date: 08/21/15 **Sample Time:** 0730
Sampled By: Contractor
Weather Conditions: p.cloudy
Accumulative Yards: 9 **Batch Size (cy):** 9
Placement Method: Pump
Water Added Before (gal):
Water Added After (gal): 45
Sample Location: Autoclave area see drawing
Placement Location: same

Field Test Data

Test	Result	Specification
Slump (in):		4 - 6
Air Content (%):		
Concrete Temp. (F):		
Ambient Temp. (F):		
Plastic Unit Wt. (pcf):		
Yield (Cu. Yds.):		

Laboratory Test Data

Set No.	Specimen ID	Avg Diam. (in)	Area (sq in)	Date Received	Specimen Weight (lbs)	Date Tested	Age at Test (days)	Maximum Load (lbs)	Compressive Strength (psi)	Fracture Type
1	A	6.00	28.27	08/22/15	28.90	08/24/15	3	79,700	2,820	2
1	B	6.00	28.27	08/22/15	29.17	08/28/15	7	84,960	3,010	2
1	C	6.00	28.27	08/22/15		09/18/15	28			
1	D			08/22/15			Hold			

Comments: **Not tested for plastic unit weight.**
cylinders cast by contractor

Samples Made By: Terracon
Services:

Terracon Rep.: Kerry Cobb
Reported To: Robby Brown with Brown Construction
Contractor:
Report Distribution:
(1) Brown Construction & Development, Emailed (1) Taylor Corporation, Emailed

Start/Stop:

Reviewed By: Anthony Cheatwood
Project Manager II

Test Methods: ASTM C 31, ASTM C39, ASTM C138, ASTM C143, ASTM C172, ASTM C1064

The tests were performed in general accordance with applicable ASTM, AASHTO, or DOT test methods. This report is exclusively for the use of the client indicated above and shall not be reproduced except in full without the written consent of our company. Test results transmitted herein are only applicable to the actual samples tested at the location(s) referenced and are not necessarily indicative of the properties of other apparently similar or identical materials.

CONCRETE COMPRESSIVE STRENGTH TEST REPORT

Report Number: E1151124.0002
Service Date: 08/21/15
Report Date: 08/31/15 Revision 1 - 7-day results
Task:

Terracon
110 12th St. North
Birmingham, AL 35203
205-942-1289

Client

Brown Construction & Development
Attn: Robby Brown
225 Campbell Street
Heflin, AL 36264

Project

Solutia OU-3 Remediation
Clydesdale Avenue
Anniston, AL

Project Number: E1151124

Material Information

Specified Strength: 3,000 psi @ 28 days

Mix ID: RM3002
Supplier: Webb
Batch Time: 0800 **Plant:** 202
Truck No.: 109 **Ticket No.:** 110907

Sample Information

Sample Date: 08/21/15 **Sample Time:** 0900
Sampled By: Kerry Cobb
Weather Conditions: clear
Accumulative Yards: 18 **Batch Size (cy):** 9
Placement Method: Pump
Water Added Before (gal): 10
Water Added After (gal): 0 **Slump After (in):** 6
Sample Location: autoclave area - see drawing
Placement Location: same

Field Test Data

Test	Result	Specification
Slump (in):	6	4 - 6
Air Content (%):	2.0	
Concrete Temp. (F):	82	
Ambient Temp. (F):	80	
Plastic Unit Wt. (pcf):	148.6	
Yield (Cu. Yds.):		

Laboratory Test Data

Set No.	Specimen ID	Avg Diam. (in)	Area (sq in)	Date Received	Specimen Weight (lbs)	Date Tested	Age at Test (days)	Maximum Load (lbs)	Compressive Strength (psi)	Fracture Type
2	a	4.00	12.57	08/22/15	8.16	08/24/15	3	18,990	1,510	2
2	b	4.00	12.57	08/22/15	8.12	08/28/15	7	20,930	1,670	2
2	c	4.00	12.57	08/22/15		09/18/15	28			
2	d	4.00	12.57	08/22/15		09/18/15	28			

Comments: n/a

Samples Made By: Terracon
Services:

Terracon Rep.: Kerry Cobb
Reported To: Robby Brown with Brown Construction
Contractor:
Report Distribution:
(1) Brown Construction & Development, Emailed (1) Taylor Corporation, Emailed

Start/Stop:

Reviewed By: Anthony Cheatwood
Project Manager II

Test Methods: ASTM C 31, ASTM C39, ASTM C138, ASTM C143, ASTM C172, ASTM C1064

The tests were performed in general accordance with applicable ASTM, AASHTO, or DOT test methods. This report is exclusively for the use of the client indicated above and shall not be reproduced except in full without the written consent of our company. Test results transmitted herein are only applicable to the actual samples tested at the location(s) referenced and are not necessarily indicative of the properties of other apparently similar or identical materials.

CONCRETE COMPRESSIVE STRENGTH TEST REPORT

Report Number: E1151124.0002
Service Date: 08/21/15
Report Date: 08/26/15
Task:

Terracon
110 12th St. North
Birmingham, AL 35203
205-942-1289

Client

Brown Construction & Development
Attn: Robby Brown
225 Campbell Street
Heflin, AL 36264

Project

Solutia OU-3 Remediation
Clydesdale Avenue
Anniston, AL

Project Number: E1151124

Material Information

Specified Strength: 3,000 psi @ 28 days

Mix ID: RM3002
Supplier: Webb
Batch Time: 0630 **Plant:** 202
Truck No.: 138 **Ticket No.:** 11089

Sample Information

Sample Date: 08/21/15 **Sample Time:** 0730
Sampled By: Contractor
Weather Conditions: p.cloudy
Accumulative Yards: 9 **Batch Size (cy):** 9
Placement Method: Pump
Water Added Before (gal):
Water Added After (gal): 45
Sample Location: Autoclave area see drawing
Placement Location: same

Field Test Data

Test	Result	Specification
Slump (in):		4 - 6
Air Content (%):		
Concrete Temp. (F):		
Ambient Temp. (F):		
Plastic Unit Wt. (pcf):		
Yield (Cu. Yds.):		

Laboratory Test Data

Set No.	Specimen ID	Avg Diam. (in)	Area (sq in)	Date Received	Specimen Weight (lbs)	Date Tested	Age at Test (days)	Maximum Load (lbs)	Compressive Strength (psi)	Fracture Type
1	A	6.00	28.27	08/22/15	28.90	08/24/15	3	79,700	2,820	2
1	B	6.00	28.27	08/22/15		08/28/15	7			
1	C	6.00	28.27	08/22/15		09/18/15	28			
1	D			08/22/15			Hold			

Comments: **Not tested for plastic unit weight.**
cylinders cast by contractor

Samples Made By: Terracon
Services:

Terracon Rep.: Kerry Cobb
Reported To: Robby Brown with Brown Construction
Contractor:
Report Distribution:
(1) Brown Construction & Development, Emailed

Start/Stop:

Reviewed By: Anthony Cheatwood
Project Manager II

Test Methods: ASTM C 31, ASTM C39, ASTM C138, ASTM C143, ASTM C172, ASTM C1064

The tests were performed in general accordance with applicable ASTM, AASHTO, or DOT test methods. This report is exclusively for the use of the client indicated above and shall not be reproduced except in full without the written consent of our company. Test results transmitted herein are only applicable to the actual samples tested at the location(s) referenced and are not necessarily indicative of the properties of other apparently similar or identical materials.

CONCRETE COMPRESSIVE STRENGTH TEST REPORT

Report Number: E1151124.0002
Service Date: 08/21/15
Report Date: 08/26/15
Task:

Terracon
110 12th St. North
Birmingham, AL 35203
205-942-1289

Client

Brown Construction & Development
Attn: Robby Brown
225 Campbell Street
Heflin, AL 36264

Project

Solutia OU-3 Remediation
Clydesdale Avenue
Anniston, AL

Project Number: E1151124

Material Information

Specified Strength: 3,000 psi @ 28 days

Mix ID: RM3002
Supplier: Webb
Batch Time: 0800 **Plant:** 202
Truck No.: 109 **Ticket No.:** 110907

Sample Information

Sample Date: 08/21/15 **Sample Time:** 0900
Sampled By: Kerry Cobb
Weather Conditions: clear
Accumulative Yards: 18 **Batch Size (cy):** 9
Placement Method: Pump
Water Added Before (gal): 10
Water Added After (gal): 0 **Slump After (in):** 6
Sample Location: autoclave area - see drawing
Placement Location: same

Field Test Data

Test	Result	Specification
Slump (in):	6	4 - 6
Air Content (%):	2.0	
Concrete Temp. (F):	82	
Ambient Temp. (F):	80	
Plastic Unit Wt. (pcf):	148.6	
Yield (Cu. Yds.):		

Laboratory Test Data

Set No.	Specimen ID	Avg Diam. (in)	Area (sq in)	Date Received	Specimen Weight (lbs)	Date Tested	Age at Test (days)	Maximum Load (lbs)	Compressive Strength (psi)	Fracture Type
2	a	4.00	12.57	08/22/15	8.16	08/24/15	3	18,990	1,510	2
2	b	4.00	12.57	08/22/15		08/28/15	7			
2	c	4.00	12.57	08/22/15		09/18/15	28			
2	d	4.00	12.57	08/22/15		09/18/15	28			

Comments: n/a

Samples Made By: Terracon
Services:

Terracon Rep.: Kerry Cobb
Reported To: Robby Brown with Brown Construction
Contractor:
Report Distribution:
(1) Brown Construction & Development, Emailed

Start/Stop:

Reviewed By: Anthony Cheatwood
Project Manager II

Test Methods: ASTM C 31, ASTM C39, ASTM C138, ASTM C143, ASTM C172, ASTM C1064

The tests were performed in general accordance with applicable ASTM, AASHTO, or DOT test methods. This report is exclusively for the use of the client indicated above and shall not be reproduced except in full without the written consent of our company. Test results transmitted herein are only applicable to the actual samples tested at the location(s) referenced and are not necessarily indicative of the properties of other apparently similar or identical materials.

CONCRETE OBSERVATION REPORT

Report Number: E1151124.0001
Service Date: 08/21/15
Report Date: 08/28/15

Terracon
110 12th St. North
Birmingham, AL 35203
205-942-1289

Client

Brown Construction & Development
Attn: Robby Brown
225 Campbell Street
Heflin, AL 36264

Project

Solutia OU-3 Remediation
Clydesdale Avenue
Anniston, AL

Project Number: E1151124

Services Requested By:	Robby Brown with Brown Construction
Concrete Contractor:	Brown Construction
Concrete Placement:	Slab-on-grade
Observation Location(s):	Autoclave area see drawing
Concrete Type:	3000-psi concrete supplied by Webb (Mix ID: RM3002)
Method of Placement:	Pump
Method of Consolidation:	Vibratory screed
Tests Performed:	Concrete slump, air, temperature and unit weight measurements were performed and the results were in accordance with project specifications.
Test Specimens Fabricated:	A total of 8 compressive strength specimens [Set No(s).: 1, 2] were fabricated during today's concrete activities. 4 cylinders were cast by the contractor prior to Terracon technician's arrival.
Summary:	Based on our observations, cast-in-place concrete construction activities at the above-referenced locations appeared to be completed in general accordance with the project plans and specifications.

Services:

Terracon Rep.: Kerry Cobb
Reported To: Robby Brown with Brown Construction
Contractor:
Started
Finished:

Report Distribution:
(1) Brown Construction & Development, Emailed
(1) Taylor Corporation, Emailed

Reviewed By:

Anthony Cheatwood
Project Manager II

The tests were performed in general accordance with applicable ASTM, AASHTO, or DOT test methods. This report is exclusively for the use of the client indicated above and shall not be reproduced except in full without the written consent of our company. Test results transmitted herein are only applicable to the actual samples tested at the location(s) referenced and are not necessarily indicative of the properties of other apparently similar or identical materials.

E115 1124.0001
CONCRETE PLACEMENT LOCATIONS
8-21-15

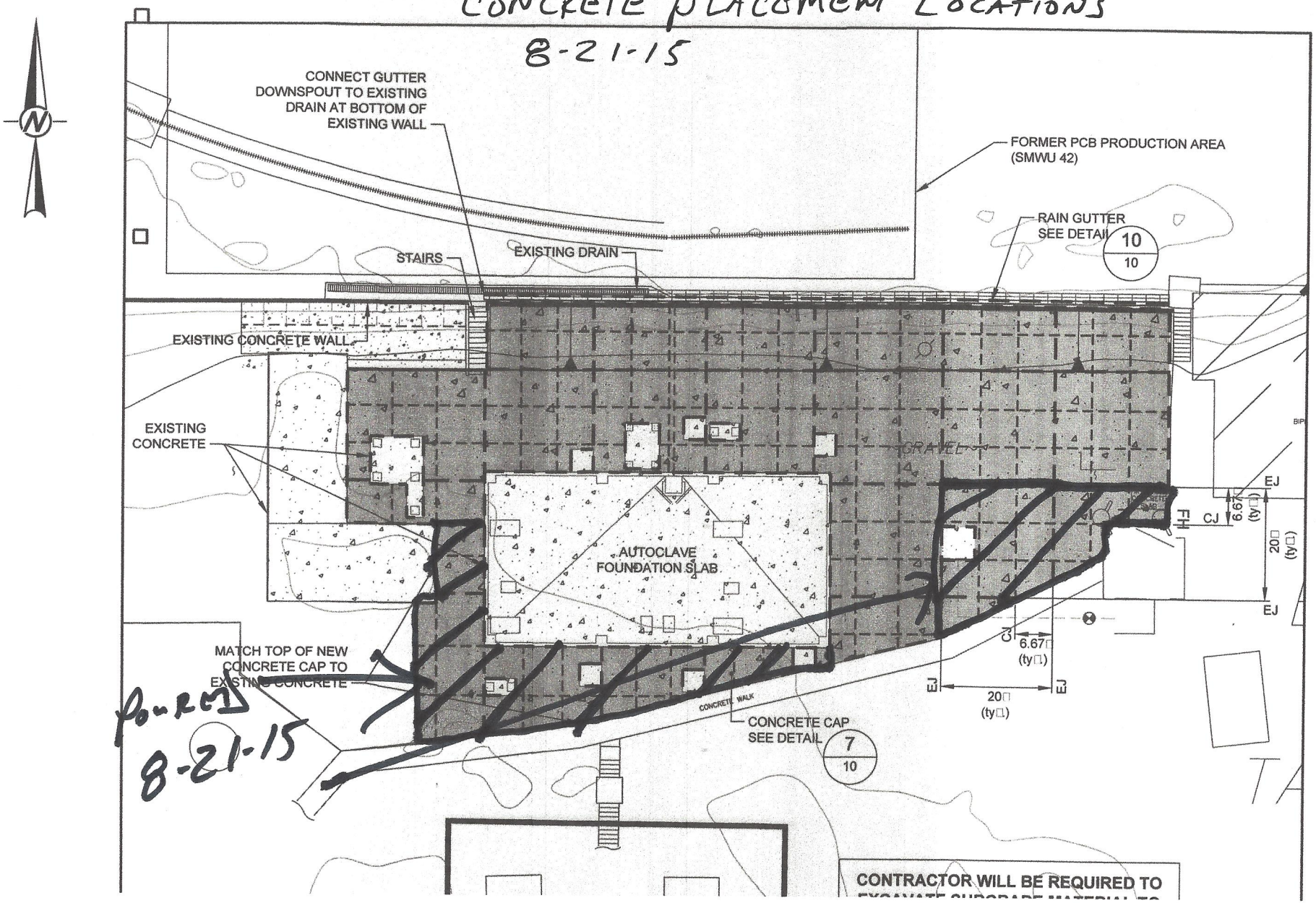

POURED 8-21-15

APPENDIX R2

Areas A and E

AREA E

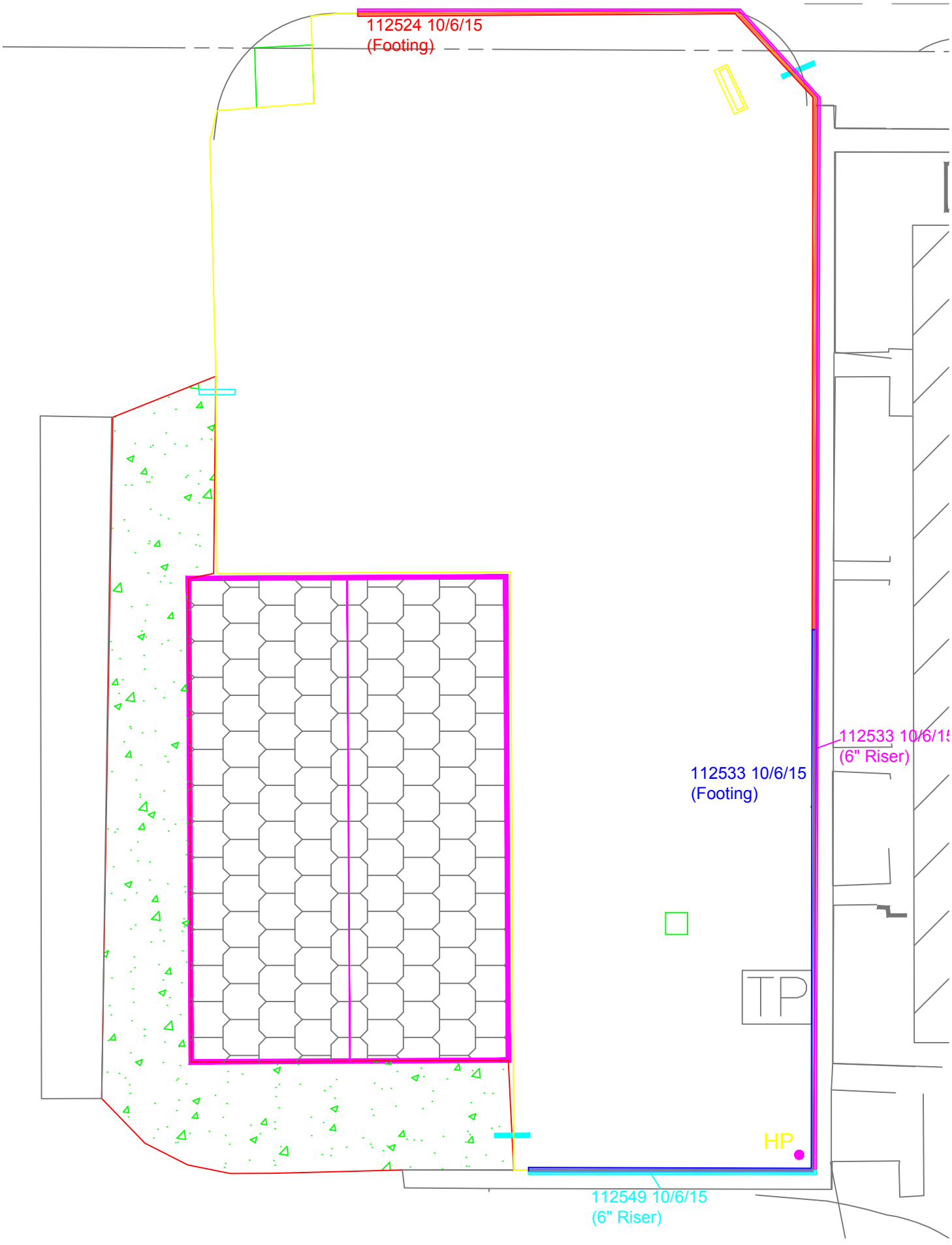
112524 10/6/15
(Footing)
112533 10/6/15
(Footing)
112533 10/6/15
(6" Riser)
TP
HP
112549 10/6/15
(6" Riser)

AREA E

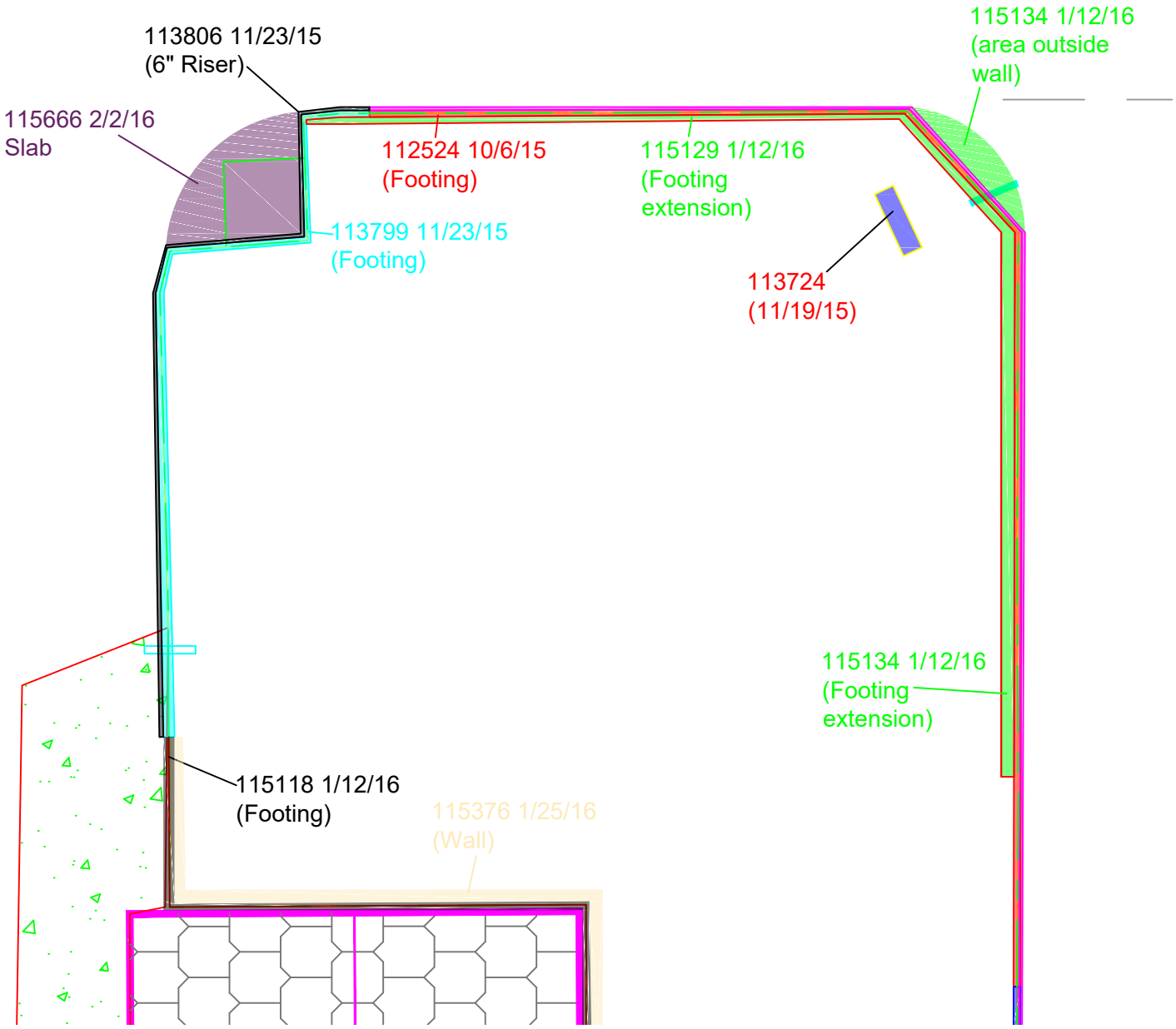
113806 11/23/15
(6" Riser)
115666 2/2/16
Slab
112524 10/6/15
(Footing)
115129 1/12/16
(Footing
extension)
115134 1/12/16
(area outside
wall)
113799 11/23/15
(Footing)
113724
(11/19/15)
115134 1/12/16
(Footing
extension)
115118 1/12/16
(Footing)
115376 1/25/16
(Wall)

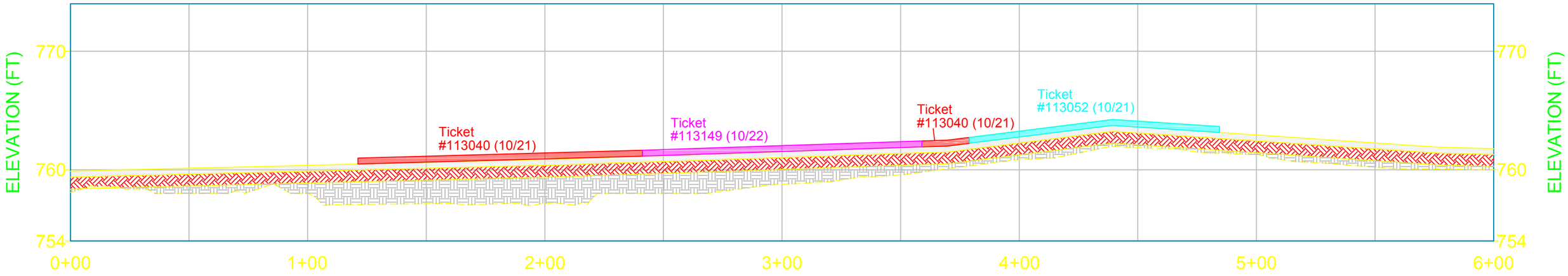

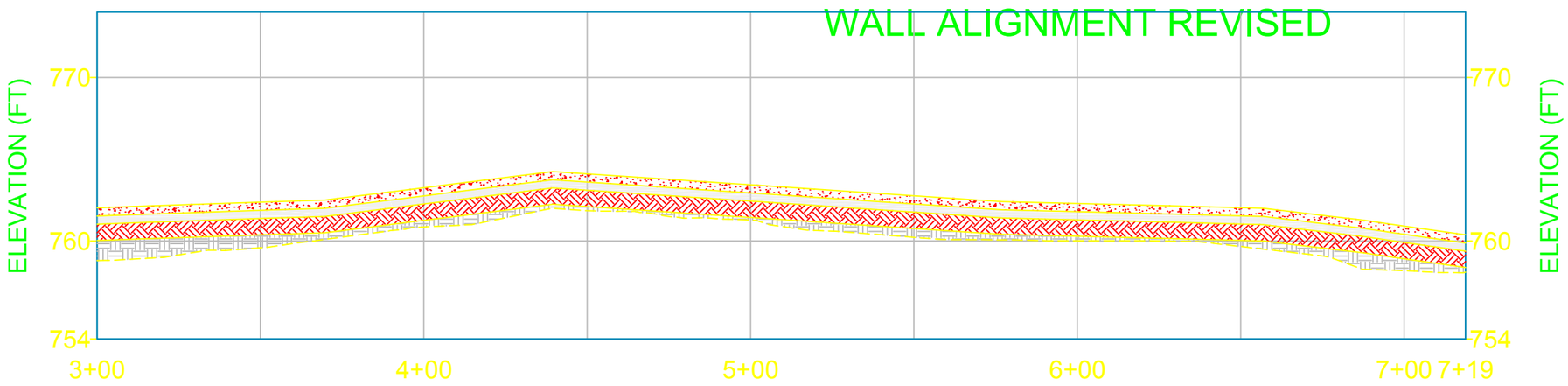

WALL ALIGNMENT REVISED

AREA A

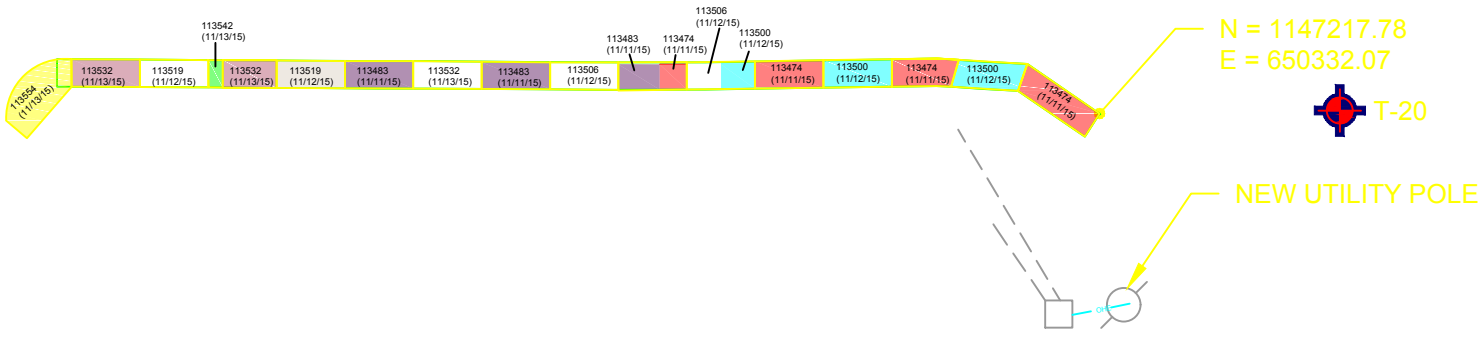

N = 1146980.34
E = 650325.45

OWR-11

PROPOSED GROUNDWATER CONVEYANCE PIPE WITHIN CAPPING AREA SEE DETAIL

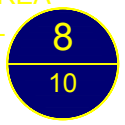

WELL TO BE EXTENDED BY OTHERS

PROPOSED OUTLET SEE DETAIL

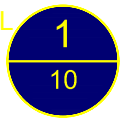

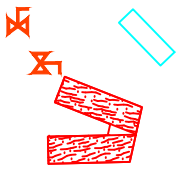

N = 1146748.27
E = 650318.39

OW-08A

IW-14A

EXISTING UNDERGROUND PIPING

Table 1 - Concrete Compressive Strength Data, Areas A & E

					CYLINDER Data							
Set Number	Spec. ID	Sampled By:	Date of Concrete Pour	Batch ID	Date Tested	Age at Test (days)	Specimen Weight (lb)	Specified Strength	Maximum Load (lbs)	Average Area (in^2)	Compress-ive Strength (lbs)	Percent of Specified Strength
7	A	Terracon	Tuesday, October 06, 2015	112524	Friday, October 09, 2015	3	8.50	4,000 psi @28 days	37690	12.57	2,998	75%
7	B	Terracon	Tuesday, October 06, 2015		Tuesday, October 13, 2015	7	8.69	4,000 psi @28 days	51060	12.57	4,062	102%
7	C	Terracon	Tuesday, October 06, 2015		Tuesday, November 03, 2015	28	8.69	4,000 psi @28 days	60700	12.57	4,829	121%
7	D	Terracon	Tuesday, October 06, 2015		Tuesday, November 03, 2015	28	8.67	4,000 psi @28 days	60580	12.57	4,819	120%
8	A	Terracon	Tuesday, October 06, 2015	112533	Friday, October 09, 2015	3	8.49	4,000 psi @28 days	37930	12.57	3,018	75%
8	B	Terracon	Tuesday, October 06, 2015		Tuesday, October 13, 2015	7	8.63	4,000 psi @28 days	48130	12.57	3,829	96%
8	C	Terracon	Tuesday, October 06, 2015		Tuesday, November 03, 2015	28	8.67	4,000 psi @28 days	57000	12.57	4,535	113%
8	D	Terracon	Tuesday, October 06, 2015		Tuesday, November 03, 2015	28	8.62	4,000 psi @28 days	58880	12.57	4,684	117%
9	A	Terracon	Friday, October 09, 2015	112678	Monday, October 12, 2015	3	8.64	4,000 psi @28 days	39740	12.57	3,161	79%
9	B	Terracon	Friday, October 09, 2015		Friday, October 16, 2015	7	8.62	4,000 psi @28 days	48150	12.57	3,831	96%
9	C	Terracon	Friday, October 09, 2015		Friday, November 06, 2015	28	8.65	4,000 psi @28 days	55210	12.57	4,392	110%
9	D	Terracon	Friday, October 09, 2015		Friday, November 06, 2015	28	8.65	4,000 psi @28 days	62700	12.57	4,988	125%
10	A	Terracon	Monday, October 12, 2015	112731	Thursday, October 15, 2015	3	8.56	4,000 psi @28 days	42070	12.57	3,347	84%
10	B	Terracon	Monday, October 12, 2015		Monday, October 19, 2015	7	8.71	4,000 psi @28 days	45780	12.57	3,642	91%
10	C	Terracon	Monday, October 12, 2015		Monday, November 09, 2015	28	8.71	4,000 psi @28 days	65700	12.57	5,227	131%
10	D	Terracon	Monday, October 12, 2015		Monday, November 09, 2015	28	8.66	4,000 psi @28 days	61580	12.57	4,899	122%
11	A	Terracon	Monday, October 12, 2015	112735	Thursday, October 15, 2015	3	8.69	4,000 psi @28 days	37370	12.57	2,973	74%
11	B	Terracon	Monday, October 12, 2015		Monday, October 19, 2015	7	8.72	4,000 psi @28 days	42020	12.57	3,343	84%
11	C	Terracon	Monday, October 12, 2015		Monday, November 09, 2015	28	8.77	4,000 psi @28 days	58390	12.57	4,645	116%
11	D	Terracon	Monday, October 12, 2015		Monday, November 09, 2015	28	8.71	4,000 psi @28 days	58260	12.57	4,635	116%
12	A	Terracon	Tuesday, October 13, 2015	112764	Friday, October 16, 2015	3	8.59	4,000 psi @28 days	37440	12.57	2,979	74%
12	B	Terracon	Tuesday, October 13, 2015		Tuesday, October 20, 2015	7	8.69	4,000 psi @28 days	46280	12.57	3,682	92%
12	C	Terracon	Tuesday, October 13, 2015		Tuesday, November 10, 2015	28	8.72	4,000 psi @28 days	60890	12.57	4,844	121%
12	D	Terracon	Tuesday, October 13, 2015		Tuesday, November 10, 2015	28	8.70	4,000 psi @28 days	59340	12.57	4,721	118%

Table 1 - Concrete Compressive Strength Data, Areas A & E

					CYLINDER Data							
Set Number	Spec. ID	Sampled By:	Date of Concrete Pour	Batch ID	Date Tested	Age at Test (days)	Specimen Weight (lb)	Specified Strength	Maximum Load (lbs)	Average Area (in^2)	Compress-ive Strength (lbs)	Percent of Specified Strength
13	A	Terracon	Wednesday, October 14, 2015	112791	Monday, October 19, 2015	5	8.70	4,000 psi @28 days	46300	12.57	3,683	92%
13	B	Terracon	Wednesday, October 14, 2015		Wednesday, October 21, 2015	7	8.72	4,000 psi @28 days	44560	12.57	3,545	89%
13	C	Terracon	Wednesday, October 14, 2015		Wednesday, November 11, 2015	28	8.75	4,000 psi @28 days	63710	12.57	5,068	127%
13	D	Terracon	Wednesday, October 14, 2015		Wednesday, November 11, 2015	28	8.74	4,000 psi @28 days	61080	12.57	4,859	121%
14	A	Terracon	Wednesday, October 21, 2015	113040	Monday, October 26, 2015	5	8.51	4,000 psi @28 days	34410	12.57	2,737	68%
14	B	Terracon	Wednesday, October 21, 2015		Wednesday, October 28, 2015	7	8.48	4,000 psi @28 days	34790	12.57	2,768	69%
14	C	Terracon	Wednesday, October 21, 2015		Wednesday, November 18, 2015	28	8.54	4,000 psi @28 days	50650	12.57	4,029	101%
14	D	Terracon	Wednesday, October 21, 2015		Wednesday, November 18, 2015	28	8.55	4,000 psi @28 days	50990	12.57	4,056	101%
15	A	Terracon	Friday, October 23, 2015	113149	Monday, October 26, 2015	3	8.71	4,000 psi @28 days	35370	12.57	2,814	70%
15	B	Terracon	Friday, October 23, 2015		Friday, October 30, 2015	7	8.57	4,000 psi @28 days	39910	12.57	3,175	79%
15	C	Terracon	Friday, October 23, 2015		Friday, November 20, 2015	28	8.44	4,000 psi @28 days	57720	12.57	4,592	115%
15	D	Terracon	Friday, October 23, 2015		Friday, November 20, 2015	28	8.58	4,000 psi @28 days	53900	12.57	4,288	107%
16	A	Terracon	Thursday, October 29, 2015	113189	Monday, November 02, 2015	4	8.58	4,000 psi @28 days	39400	12.57	3,134	78%
16	B	Terracon	Thursday, October 29, 2015		Thursday, November 05, 2015	7	8.56	4,000 psi @28 days	47500	12.57	3,779	94%
16	C	Terracon	Thursday, October 29, 2015		Thursday, November 26, 2015	28	8.58	4,000 psi @28 days	64280	12.57	5,114	128%
16	D	Terracon	Thursday, October 29, 2015					4,000 psi @28 days				
17	A	Terracon	Friday, October 30, 2015	113235	Monday, November 02, 2015	3	8.38	4,000 psi @28 days	30740	12.57	2,446	61%
17	B	Terracon	Friday, October 30, 2015		Friday, November 06, 2015	7	8.56	4,000 psi @28 days	45850	12.57	3,648	91%
17	C	Terracon	Friday, October 30, 2015		Friday, November 27, 2015	28	8.40	4,000 psi @28 days	56580	12.57	4,501	113%
17	D	Terracon	Friday, October 30, 2015					4,000 psi @28 days				
18	A	Terracon	Wednesday, November 04, 2015	113317	Monday, November 09, 2015	5	8.69	4,000 psi @28 days	45660	12.57	3,632	91%
18	B	Terracon	Wednesday, November 04, 2015		Wednesday, November 11, 2015	7	8.69	4,000 psi @28 days	47230	12.57	3,757	94%
18	C	Terracon	Wednesday, November 04, 2015		Wednesday, December 02, 2015	28	8.67	4,000 psi @28 days	64460	12.57	5,128	128%
18	D	Terracon	Wednesday, November 04, 2015					4,000 psi @28 days				

Table 1 - Concrete Compressive Strength Data, Areas A & E

					CYLINDER Data								
Set Number	Spec. ID	Sampled By:	Date of Concrete Pour	Batch ID	Date Tested	Age at Test (days)	Specimen Weight (lb)	Specified Strength	Maximum Load (lbs)	Average Area (in^2)	Compress-ive Strength (lbs)	Percent of Specified Strength
19	A	Terracon	Thursday, November 05, 2015	113371	Monday, November 09, 2015	4	8.74	4,000 psi @28 days	38530	12.57	3,065	77%
19	B	Terracon	Thursday, November 05, 2015		Thursday, November 12, 2015	7	8.66	4,000 psi @28 days	46290	12.57	3,683	92%
19	C	Terracon	Thursday, November 05, 2015		Thursday, December 03, 2015	28	8.66	4,000 psi @28 days	60950	12.57	4,849	121%
19	D	Terracon	Thursday, November 05, 2015					4,000 psi @28 days				
20	A	Terracon	Tuesday, November 10, 2015	113434	Friday, November 13, 2015	3	8.58	4,000 psi @28 days	42880	12.57	3,411	85%
20	B	Terracon	Tuesday, November 10, 2015		Tuesday, November 17, 2015	7	8.63	4,000 psi @28 days	44640	12.57	3,551	89%
20	C	Terracon	Tuesday, November 10, 2015		Tuesday, December 08, 2015	28	8.64	4,000 psi @28 days	59750	12.57	4,753	119%
20	D	Terracon	Tuesday, November 10, 2015					4,000 psi @28 days				
21	A	Terracon	Tuesday, November 10, 2015	113445	Friday, November 13, 2015	3	8.43	4,000 psi @28 days	37470	12.57	2,981	75%
21	B	Terracon	Tuesday, November 10, 2015		Tuesday, November 17, 2015	7	8.48	4,000 psi @28 days	40690	12.57	3,237	81%
21	C	Terracon	Tuesday, November 10, 2015		Tuesday, December 08, 2015	28	8.48	4,000 psi @28 days	54000	12.57	4,296	107%
21	D	Terracon	Tuesday, November 10, 2015					4,000 psi @28 days				
22	A	Terracon	Wednesday, November 11, 2015	113464	Saturday, November 14, 2015	3		4,000 psi @28 days	35400	12.57	2,816	70%
22	B	Terracon	Wednesday, November 11, 2015		Wednesday, November 18, 2015	7	8.48	4,000 psi @28 days	39180	12.57	3,117	78%
22	C	Terracon	Wednesday, November 11, 2015		Wednesday, December 09, 2015	28	8.41	4,000 psi @28 days	57090	12.57	4,542	114%
22	D	Terracon	Wednesday, November 11, 2015					4,000 psi @28 days				
23	A	Terracon	Thursday, November 12, 2015	113500	Sunday, November 15, 2015	3		4,000 psi @28 days	44580	12.57	3,547	89%
23	B	Terracon	Thursday, November 12, 2015		Thursday, November 19, 2015	7	8.57	4,000 psi @28 days	47580	12.57	3,785	95%
23	C	Terracon	Thursday, November 12, 2015		Thursday, December 10, 2015	28	8.65	4,000 psi @28 days	65700	12.57	5,227	131%
23	D	Terracon	Thursday, November 12, 2015					4,000 psi @28 days				
24	A	Terracon	Friday, November 13, 2015	113532	Monday, November 16, 2015	3	8.63	4,000 psi @28 days	43100	12.57	3,429	86%
24	B	Terracon	Friday, November 13, 2015		Friday, November 20, 2015	7	8.61	4,000 psi @28 days	51290	12.57	4,080	102%
24	C	Terracon	Friday, November 13, 2015		Friday, December 11, 2015	28	8.65	4,000 psi @28 days	59390	12.57	4,725	118%
24	D	Terracon	Friday, November 13, 2015					4,000 psi @28 days				

Table 1 - Concrete Compressive Strength Data, Areas A & E

					CYLINDER Data							
Set Number	Spec. ID	Sampled By:	Date of Concrete Pour	Batch ID	Date Tested	Age at Test (days)	Specimen Weight (lb)	Specified Strength	Maximum Load (lbs)	Average Area (in^2)	Compress-ive Strength (lbs)	Percent of Specified Strength
25	A	Terracon	Thursday, November 19, 2015	113724	Sunday, November 22, 2015	3	8.76	4,000 psi @28 days	41200	12.57	3,278	82%
25	B	Terracon	Thursday, November 19, 2015		Thursday, November 26, 2015	7	8.68	4,000 psi @28 days	56190	12.57	4,470	112%
25	C	Terracon	Thursday, November 19, 2015		Thursday, December 17, 2015	28	8.77	4,000 psi @28 days	68830	12.57	5,476	137%
25	D	Terracon	Thursday, November 19, 2015					4,000 psi @28 days				
26	A	Terracon	Monday, November 23, 2015	113799	Monday, November 30, 2015	7	8.56	4,000 psi @28 days	49980	12.57	3,976	99%
26	B	Terracon	Monday, November 23, 2015		Monday, December 21, 2015	28	8.66	4,000 psi @28 days	63380	12.57	5,042	126%
26	C	Terracon	Monday, November 23, 2015		Monday, December 21, 2015	28	8.67	4,000 psi @28 days	62590	12.57	4,979	124%
26	D	Terracon	Monday, November 23, 2015					4,000 psi @28 days				
27	A	Terracon	Thursday, December 10, 2015	114380	Sunday, December 13, 2015	3		4,000 psi @28 days	33960	12.57	2,702	68%
27	B	Terracon	Thursday, December 10, 2015		Thursday, December 17, 2015	7	8.52	4,000 psi @28 days	44610	12.57	3,549	89%
27	C	Terracon	Thursday, December 10, 2015		Thursday, January 07, 2016	28	8.61	4,000 psi @28 days	61410	12.57	4,885	122%
27	D	Terracon	Thursday, December 10, 2015		Thursday, January 07, 2016	28	8.67	4,000 psi @28 days	58870	12.57	4,683	117%
28	A	Terracon	Tuesday, January 12, 2016	115118	Monday, January 18, 2016	6	8.48	4,000 psi @28 days	47960	12.57	3,815	95%
28	B	Terracon	Tuesday, January 12, 2016		Tuesday, January 19, 2016	7	8.50	4,000 psi @28 days	50820	12.57	4,043	101%
28	C	Terracon	Tuesday, January 12, 2016		Tuesday, February 09, 2016	28	8.50	4,000 psi @28 days	65460	12.57	5,208	130%
28	D	Terracon	Tuesday, January 12, 2016		Tuesday, February 09, 2016	28	8.56	4,000 psi @28 days	68430	12.57	5,444	136%
29	A	Terracon	Monday, January 25, 2016	115376	Monday, February 01, 2016	7	8.56	4,000 psi @28 days	47960	12.57	3,815	95%
29	B	Terracon	Monday, January 25, 2016		Monday, February 01, 2016	7	8.58	4,000 psi @28 days	48270	12.57	3,840	96%
29	C	Terracon	Monday, January 25, 2016		Monday, February 22, 2016	28	8.60	4,000 psi @28 days	85650	12.57	6,814	170%
29	D	Terracon	Monday, January 25, 2016									
30	A	Terracon	Tuesday, February 02, 2016	115666	Friday, February 05, 2016	3	8.50	4,000 psi @28 days	45600	12.57	3,628	91%
30	B	Terracon	Tuesday, February 02, 2016		Tuesday, February 09, 2016	7	8.63	4,000 psi @28 days	50470	12.57	4,015	100%
30	C	Terracon	Tuesday, February 02, 2016		Tuesday, March 01, 2016	28	8.61	4,000 psi @28 days	60810	12.57	4,838	121%
30	D	Terracon	Tuesday, February 02, 2016					4,000 psi @28 days				

CONCRETE COMPRESSIVE STRENGTH TEST REPORT

Report Number: E1151124.0084A
Service Date: 03/02/16
Report Date: 03/10/16 Revision 1 - 7-day results
Task:

Terracon
110 12th St N
Birmingham, AL 35203-1537
205-942-1289

Client

Taylor Corporation
Attn: Ellis Bennett
PO Box 3424
Oxford, AL 36203

Project

Solutia OU-3 Remediation
Clydesdale Avenue
Anniston, AL

Project Number: E1151124

Material Information

Specified Strength: 4,000 psi @ 28 days

Mix ID:
Supplier:
Batch Time: 0730 **Plant:**
Truck No.: 133 **Ticket No.:** 116461

Sample Information

Sample Date: 03/02/16 **Sample Time:** 0800
Sampled By: Kerry Cobb
Weather Conditions: clear
Accumulative Yards: 3 **Batch Size (cy):** 3
Placement Method: Chute
Water Added Before (gal): 0
Water Added After (gal): 0 **Slump After (in):** 5
Sample Location: upper valve vault walls see drawing
Placement Location: same

Field Test Data

Test	Result	Specification
Slump (in):	5	
Air Content (%):	5.5	
Concrete Temp. (F):	60	
Ambient Temp. (F):	45	
Plastic Unit Wt. (pcf):	144.8	
Yield (Cu. Yds.):		

Laboratory Test Data

Set No.	Specimen ID	Avg Diam. (in)	Area (sq in)	Date Received	Specimen Weight (lbs)	Date Tested	Age at Test (days)	Maximum Load (lbs)	Compressive Strength (psi)	Fracture Type
34	A	4.00	12.57	03/03/16	8.68	03/05/16	3	44,010	3,500	2
34	B	4.00	12.57	03/03/16	8.53	03/09/16	7	49,560	3,940	2
34	C	4.00	12.57	03/03/16		03/30/16	28			
34	D			03/03/16			Hold			

Comments: n/a

Samples Made By: Terracon
Services:

Terracon Rep.: Kerry Cobb
Reported To: Josh with Taylor Corporation
Contractor:
Report Distribution:
(1) Taylor Corporation, Emailed
(1) Brown Construction & Development, Emailed

Start/Stop:

Reviewed By: Anthony Cheatwood

Test Methods: ASTM C 31, ASTM C39, ASTM C138, ASTM C143, ASTM C172, ASTM C1064

The tests were performed in general accordance with applicable ASTM, AASHTO, or DOT test methods. This report is exclusively for the use of the client indicated above and shall not be reproduced except in full without the written consent of our company. Test results transmitted herein are only applicable to the actual samples tested at the location(s) referenced and are not necessarily indicative of the properties of other apparently similar or identical materials.

CONCRETE COMPRESSIVE STRENGTH TEST REPORT

Report Number: E1151124.0082A
Service Date: 02/25/16
Report Date: 03/28/16
Task:

Terracon
110 12th St N
Birmingham, AL 35203-1537
205-942-1289

Client

Taylor Corporation
Attn: Ellis Bennett
PO Box 3424
Oxford, AL 36203

Project

Solutia OU-3 Remediation
Clydesdale Avenue
Anniston, AL

Project Number: E1151124

Material Information

Specified Strength: 4,000 psi @ 28 days

Mix ID: RM4000
Supplier: Webb
Batch Time: 1100 **Plant:** 202
Truck No.: 73 **Ticket No.:** 116319

Sample Information

Sample Date: 02/25/16 **Sample Time:** 1200
Sampled By: Kerry Cobb
Weather Conditions: p.cloudy
Accumulative Yards: 3.50 **Batch Size (cy):** 3.5
Placement Method: Chute
Water Added Before (gal): 0
Water Added After (gal): 0 **Slump After (in):** n/a
Sample Location: valve vault footings @ area A
Placement Location: same

Field Test Data

Test	Result	Specification
Slump (in):	4	
Air Content (%):	5.0	
Concrete Temp. (F):	60	
Ambient Temp. (F):	50	
Plastic Unit Wt. (pcf):	144.8	
Yield (Cu. Yds.):		

Laboratory Test Data

Set No.	Specimen ID	Avg Diam. (in)	Area (sq in)	Date Received	Specimen Weight (lbs)	Date Tested	Age at Test (days)	Maximum Load (lbs)	Compressive Strength (psi)	Fracture Type
33	A	4.00	12.57	02/26/16		03/24/16	28	63,260	5,030	3
33	B	4.00	12.57	02/26/16		03/24/16	28	62,890	5,000	2
33	C	4.00	12.57	02/26/16	8.80	03/24/16	28	64,100	5,100	2
							Average (28 days)		**5,050**	
33	D			02/26/16			Hold			

Comments: **Average compressive strength of 28 day cylinders complies with the specified strength.**
n/a

Samples Made By: Terracon
Services:

Terracon Rep.: Kerry Cobb
Reported To: Josh with Taylor Corporation
Contractor:
Report Distribution:
(1) Taylor Corporation, Emailed
(1) Brown Construction & Development, Emailed

Start/Stop:

Reviewed By: Anthony Cheatwood
Project Manager II

Test Methods: ASTM C 31, ASTM C39, ASTM C138, ASTM C143, ASTM C172, ASTM C1064

The tests were performed in general accordance with applicable ASTM, AASHTO, or DOT test methods. This report is exclusively for the use of the client indicated above and shall not be reproduced except in full without the written consent of our company. Test results transmitted herein are only applicable to the actual samples tested at the location(s) referenced and are not necessarily indicative of the properties of other apparently similar or identical materials.

CONCRETE COMPRESSIVE STRENGTH TEST REPORT

Report Number: E1151124.0080A
Service Date: 02/18/16
Report Date: 03/18/16 Revision 2 - 28-day results
Task:

Terracon
110 12th St N
Birmingham, AL 35203-1537
205-942-1289

Client

Taylor Corporation
Attn: Ellis Bennett
PO Box 3424
Oxford, AL 36203

Project

Solutia OU-3 Remediation
Clydesdale Avenue
Anniston, AL

Project Number: E1151124

Material Information

Specified Strength: 4,000 psi @ 28 days

Mix ID: RM4000
Supplier: Webb
Batch Time: 1100 **Plant:** 202
Truck No.: 42 **Ticket No.:** 116149

Sample Information

Sample Date: 02/18/16 **Sample Time:** 1130
Sampled By: Kerry Cobb
Weather Conditions: clear
Accumulative Yards: 7 **Batch Size (cy):** 7
Placement Method: Chute
Water Added Before (gal): 0
Water Added After (gal): 5 **Slump After (in):** 4
Sample Location: walls @ area E see drawing
Placement Location: same

Field Test Data

Test	Result	Specification
Slump (in):	3	
Air Content (%):	5.5	
Concrete Temp. (F):	60	
Ambient Temp. (F):	55	
Plastic Unit Wt. (pcf):	143.9	
Yield (Cu. Yds.):		

Laboratory Test Data

Set No.	Specimen ID	Avg Diam. (in)	Area (sq in)	Date Received	Specimen Weight (lbs)	Date Tested	Age at Test (days)	Maximum Load (lbs)	Compressive Strength (psi)	Fracture Type
32	A	4.00	12.57	02/19/16	8.60	02/21/16	3	38,830	3,090	2
32	B	4.00	12.57	02/19/16	8.64	02/25/16	7	41,830	3,330	2
32	C	4.00	12.57	02/19/16	8.62	03/17/16	28	56,180	4,470	2
32	D			02/19/16			Hold			

Comments: **Compressive strength of 28 day cylinders complies with the specified strength.**
n/a

Samples Made By: Terracon
Services:

Terracon Rep.: Kerry Cobb
Reported To: Josh with Taylor Corporation
Contractor:
Report Distribution:
(1) Taylor Corporation, Emailed
(1) Brown Construction & Development, Emailed

Start/Stop:

Reviewed By: Anthony Chealwood

Test Methods: ASTM C 31, ASTM C39, ASTM C138, ASTM C143, ASTM C172, ASTM C1064

The tests were performed in general accordance with applicable ASTM, AASHTO, or DOT test methods. This report is exclusively for the use of the client indicated above and shall not be reproduced except in full without the written consent of our company. Test results transmitted herein are only applicable to the actual samples tested at the location(s) referenced and are not necessarily indicative of the properties of other apparently similar or identical materials.

CONCRETE COMPRESSIVE STRENGTH TEST REPORT

Report Number: E1151124.0078A
Service Date: 02/11/16
Report Date: 03/10/16 Revision 2 - 28-day results
Task:

Terracon
110 12th St N
Birmingham, AL 35203-1537
205-942-1289

Client

Taylor Corporation
Attn: Ellis Bennett
PO Box 3424
Oxford, AL 36203

Project

Solutia OU-3 Remediation
Clydesdale Avenue
Anniston, AL

Project Number: E1151124

Material Information

Specified Strength: 4,000 psi @ 28 days

Mix ID: RM4000
Supplier: Webb
Batch Time: 1130 **Plant:** 202
Truck No.: 133 **Ticket No.:** 115912

Sample Information

Sample Date: 02/11/16 **Sample Time:** 1230
Sampled By: Kerry Cobb
Weather Conditions: clear
Accumulative Yards: 7 **Batch Size (cy):** 7
Placement Method: Chute
Water Added Before (gal): 0
Water Added After (gal): 0 **Slump After (in):** n/a
Sample Location: Valve vault walls @ area A see drawing
Placement Location: same

Field Test Data

Test	Result	Specification
Slump (in):	4	
Air Content (%):	7.0	
Concrete Temp. (F):	62	
Ambient Temp. (F):	55	
Plastic Unit Wt. (pcf):	144.8	
Yield (Cu. Yds.):		

Laboratory Test Data

Set No.	Specimen ID	Avg Diam. (in)	Area (sq in)	Date Received	Specimen Weight (lbs)	Date Tested	Age at Test (days)	Maximum Load (lbs)	Compressive Strength (psi)	Fracture Type
31	A	4.00	12.57	02/12/16		02/14/16	3	40,840	3,250	2
31	B	4.00	12.57	02/12/16	8.53	02/18/16	7	45,140	3,590	2
31	C	4.00	12.57	02/12/16	8.56	03/10/16	28	65,420	5,210	3
31	D			02/12/16			Hold			

Comments: **Compressive strength of 28 day cylinders complies with the specified strength.**
n/a

Samples Made By: Terracon
Services:

Terracon Rep.: Kerry Cobb
Reported To: Josh with Taylor Corporation
Contractor:
Report Distribution:
(1) Taylor Corporation, Emailed
(1) Brown Construction & Development, Emailed

Start/Stop:

Reviewed By: Anthony Chealwood

Test Methods: ASTM C 31, ASTM C39, ASTM C138, ASTM C143, ASTM C172, ASTM C1064

The tests were performed in general accordance with applicable ASTM, AASHTO, or DOT test methods. This report is exclusively for the use of the client indicated above and shall not be reproduced except in full without the written consent of our company. Test results transmitted herein are only applicable to the actual samples tested at the location(s) referenced and are not necessarily indicative of the properties of other apparently similar or identical materials.

CONCRETE COMPRESSIVE STRENGTH TEST REPORT

Report Number: E1151124.0076
Service Date: 02/02/16
Report Date: 03/01/16 Revision 2 - 28-day results
Task:

Terracon
110 12th St N
Birmingham, AL 35203-1537
205-942-1289

Client

Taylor Corporation
Attn: Ellis Bennett
PO Box 3424
Oxford, AL 36203

Project

Solutia OU-3 Remediation
Clydesdale Avenue
Anniston, AL

Project Number: E1151124

Material Information

Specified Strength: 4,000 psi @ 28 days

Mix ID: RM4000
Supplier: Webb
Batch Time: 0830 **Plant:** 202
Truck No.: 31 **Ticket No.:** 115666

Sample Information

Sample Date: 02/02/16 **Sample Time:** 0900
Sampled By: Kerry Cobb
Weather Conditions: cloudy
Accumulative Yards: 9 **Batch Size (cy):** 9
Placement Method: Chute
Water Added Before (gal): 0
Water Added After (gal): 0 **Slump After (in):** n/a
Sample Location: valve vault footings @ aera A see drawing
Placement Location: same

Field Test Data

Test	Result	Specification
Slump (in):	4	
Air Content (%):	5.5	
Concrete Temp. (F):	67	
Ambient Temp. (F):	60	
Plastic Unit Wt. (pcf):	146.0	
Yield (Cu. Yds.):		

Laboratory Test Data

Set No.	Specimen ID	Avg Diam. (in)	Area (sq in)	Date Received	Specimen Weight (lbs)	Date Tested	Age at Test (days)	Maximum Load (lbs)	Compressive Strength (psi)	Fracture Type
30	A	4.00	12.57	02/03/16	8.50	02/05/16	3	45,600	3,630	2
30	B	4.00	12.57	02/03/16	8.63	02/09/16	7	50,470	4,020	3
30	C	4.00	12.57	02/03/16	8.61	03/01/16	28	60,810	4,840	2
30	D			02/03/16			Hold			

Comments: **Compressive strength of 28 day cylinders complies with the specified strength.**
n/a

Samples Made By: Terracon
Services:

Terracon Rep.: Kerry Cobb
Reported To: Josh with Taylor Corporation
Contractor:
Report Distribution:
(1) Taylor Corporation, Emailed
(1) Brown Construction & Development, Emailed

Start/Stop:

Reviewed By: Anthony Cheatwood

Test Methods: ASTM C 31, ASTM C39, ASTM C138, ASTM C143, ASTM C172, ASTM C1064

The tests were performed in general accordance with applicable ASTM, AASHTO, or DOT test methods. This report is exclusively for the use of the client indicated above and shall not be reproduced except in full without the written consent of our company. Test results transmitted herein are only applicable to the actual samples tested at the location(s) referenced and are not necessarily indicative of the properties of other apparently similar or identical materials.

CONCRETE COMPRESSIVE STRENGTH TEST REPORT

Report Number: E1151124.0073A
Service Date: 01/25/16
Report Date: 02/23/16 Revision 1 - 28-day results
Task:

Terracon
110 12th St N
Birmingham, AL 35203-1537
205-942-1289

Client

Taylor Corporation
Attn: Ellis Bennett
PO Box 3424
Oxford, AL 36203

Project

Solutia OU-3 Remediation
Clydesdale Avenue
Anniston, AL

Project Number: E1151124

Material Information

Specified Strength: 4,000 psi @ 28 days

Mix ID: RM4000
Supplier: Webb
Batch Time: 1130 **Plant:** 202
Truck No.: 76 **Ticket No.:** 115376

Sample Information

Sample Date: 01/25/16 **Sample Time:**
Sampled By: Kerry Cobb
Weather Conditions: p.cloudy
Accumulative Yards: 9 **Batch Size (cy):** 9
Placement Method: Pump
Water Added Before (gal): 0
Water Added After (gal): 0 **Slump After (in):** n/a
Sample Location: walls @ area E see drawing
Placement Location: same

Field Test Data

Test	Result	Specification
Slump (in):	5	
Air Content (%):	5.0	5 - 7
Concrete Temp. (F):	58	40 - 90
Ambient Temp. (F):	40	
Plastic Unit Wt. (pcf):	147.2	
Yield (Cu. Yds.):		

Laboratory Test Data

Set No.	Specimen ID	Avg Diam. (in)	Area (sq in)	Date Received	Specimen Weight (lbs)	Date Tested	Age at Test (days)	Maximum Load (lbs)	Compressive Strength (psi)	Fracture Type
29	A	4.00	12.57	01/26/16	8.56	02/01/16	7	47,960	3,820	2
29	B	4.00	12.57	01/26/16	8.58	02/01/16	7	48,270	3,840	3
							Average (7 days)		**3,830**	
29	C	4.00	12.57	01/26/16	8.60	02/22/16	28	85,650	6,820	2
29	D			01/26/16			Hold			

Comments: **Compressive strength of 28 day cylinders complies with the specified strength.**
n/a

Samples Made By: Terracon
Services:

Terracon Rep.: Kerry Cobb
Reported To: Josh with Taylor Corporation
Contractor:
Report Distribution:
(1) Taylor Corporation, Emailed
(1) Brown Construction & Development, Emailed

Start/Stop:

Reviewed By: Anthony Chealwood

Test Methods: ASTM C 31, ASTM C39, ASTM C138, ASTM C143, ASTM C172, ASTM C1064

The tests were performed in general accordance with applicable ASTM, AASHTO, or DOT test methods. This report is exclusively for the use of the client indicated above and shall not be reproduced except in full without the written consent of our company. Test results transmitted herein are only applicable to the actual samples tested at the location(s) referenced and are not necessarily indicative of the properties of other apparently similar or identical materials.

CONCRETE COMPRESSIVE STRENGTH TEST REPORT

Report Number: E1151124.0071A
Service Date: 01/12/16
Report Date: 02/15/16 Revision 2 - 28-day results
Task:

Terracon
110 12th St. North
Birmingham, AL 35203
205-942-1289

Client

Taylor Corporation
Attn: Ellis Bennett
PO Box 3424
Oxford, AL 36203

Project

Solutia OU-3 Remediation
Clydesdale Avenue
Anniston, AL

Project Number: E1151124

Material Information

Specified Strength: 4,000 psi @ 28 days

Mix ID: RM4000
Supplier: Webb
Batch Time: 0800 **Plant:** 202
Truck No.: 71 **Ticket No.:** 115118

Sample Information

Sample Date: 01/12/16 **Sample Time:** 0900
Sampled By: Kerry Cobb
Weather Conditions: clear
Accumulative Yards: 7 **Batch Size (cy):** 7
Placement Method: Chute
Water Added Before (gal): 0
Water Added After (gal): 0 **Slump After (in):** n/a
Sample Location: area E wall footings see drawing
Placement Location: same

Field Test Data

Test	Result	Specification
Slump (in):	4	
Air Content (%):	7.0	
Concrete Temp. (F):	55	
Ambient Temp. (F):	42	
Plastic Unit Wt. (pcf):	142.5	
Yield (Cu. Yds.):		

Laboratory Test Data

Set No.	Specimen ID	Avg Diam. (in)	Area (sq in)	Date Received	Specimen Weight (lbs)	Date Tested	Age at Test (days)	Maximum Load (lbs)	Compressive Strength (psi)	Fracture Type
28	A	4.00	12.57	01/13/16	8.48	01/18/16	6	47,960	3,820	2
28	B	4.00	12.57	01/13/16	8.50	01/19/16	7	50,820	4,040	3
28	C	4.00	12.57	01/13/16	8.50	02/09/16	28	65,460	5,210	2
28	D	4.00	12.57	01/13/16	8.56	02/09/16	28	68,430	5,450	2
							Average (28 days)		**5,330**	
28	E			01/13/16			Hold			

Comments: **Average compressive strength of 28 day cylinders complies with the specified strength.**
n/a

Samples Made By: Terracon
Services:

Terracon Rep.: Kerry Cobb
Reported To: Brown Construction
Contractor:
Report Distribution:
(1) Taylor Corporation, Emailed
(1) Brown Construction & Development, Emailed

Start/Stop:

Reviewed By: Anthony Cheatwood

Test Methods: ASTM C 31, ASTM C39, ASTM C138, ASTM C143, ASTM C172, ASTM C1064

The tests were performed in general accordance with applicable ASTM, AASHTO, or DOT test methods. This report is exclusively for the use of the client indicated above and shall not be reproduced except in full without the written consent of our company. Test results transmitted herein are only applicable to the actual samples tested at the location(s) referenced and are not necessarily indicative of the properties of other apparently similar or identical materials.

CONCRETE COMPRESSIVE STRENGTH TEST REPORT

Report Number: E1151124.0069A
Service Date: 12/10/15
Report Date: 01/07/16 Revision 2 - 28-day results
Task:

Terracon
110 12th St. North
Birmingham, AL 35203
205-942-1289

Client

Taylor Corporation
Attn: Ellis Bennett
PO Box 3424
Oxford, AL 36203

Project

Solutia OU-3 Remediation
Clydesdale Avenue
Anniston, AL

Project Number: E1151124

Material Information

Specified Strength: 4,000 psi @ 28 days

Mix ID: RM4000
Supplier: Webb
Batch Time: 1000 **Plant:** 202
Truck No.: 75 **Ticket No.:** 114380

Sample Information

Sample Date: 12/10/15 **Sample Time:** 1100
Sampled By: Kerry Cobb
Weather Conditions: p.cloudy
Accumulative Yards: 7 **Batch Size (cy):** 7
Placement Method: Chute
Water Added Before (gal): 0
Water Added After (gal): 0 **Slump After (in):** n/a
Sample Location: wallls @ area E see drawing
Placement Location: same

Field Test Data

Test	Result	Specification
Slump (in):	4	3 - 5
Air Content (%):	6.0	5 - 8
Concrete Temp. (F):	73	Max 90
Ambient Temp. (F):	69	
Plastic Unit Wt. (pcf):	145.1	
Yield (Cu. Yds.):		

Laboratory Test Data

Set No.	Specimen ID	Avg Diam. (in)	Area (sq in)	Date Received	Specimen Weight (lbs)	Date Tested	Age at Test (days)	Maximum Load (lbs)	Compressive Strength (psi)	Fracture Type
27	A	4.00	12.57	12/11/15		12/13/15	3	33,960	2,700	3
27	B	4.00	12.57	12/11/15	8.52	12/17/15	7	44,610	3,550	3
27	C	4.00	12.57	12/11/15	8.61	01/07/16	28	61,410	4,890	2
27	D	4.00	12.57	12/11/15	8.67	01/07/16	28	58,870	4,680	2
							Average (28 days)		**4,790**	
27	E			12/11/15			Hold			

Comments: **Average compressive strength of 28 day cylinders complies with the specified strength.**
n/a

Samples Made By: Terracon
Services:

Terracon Rep.: Kerry Cobb
Reported To: Robby Brown with Brown Construction
Contractor:
Report Distribution:
(1) Taylor Corporation, Emailed
(1) Brown Construction & Development, Emailed

Start/Stop:

Reviewed By: Anthony Cheatwood

Test Methods: ASTM C 31, ASTM C39, ASTM C138, ASTM C143, ASTM C172, ASTM C1064

The tests were performed in general accordance with applicable ASTM, AASHTO, or DOT test methods. This report is exclusively for the use of the client indicated above and shall not be reproduced except in full without the written consent of our company. Test results transmitted herein are only applicable to the actual samples tested at the location(s) referenced and are not necessarily indicative of the properties of other apparently similar or identical materials.

E115124.0069
CONCRETE PLACEMENT
LOCATIONS 12-10-15

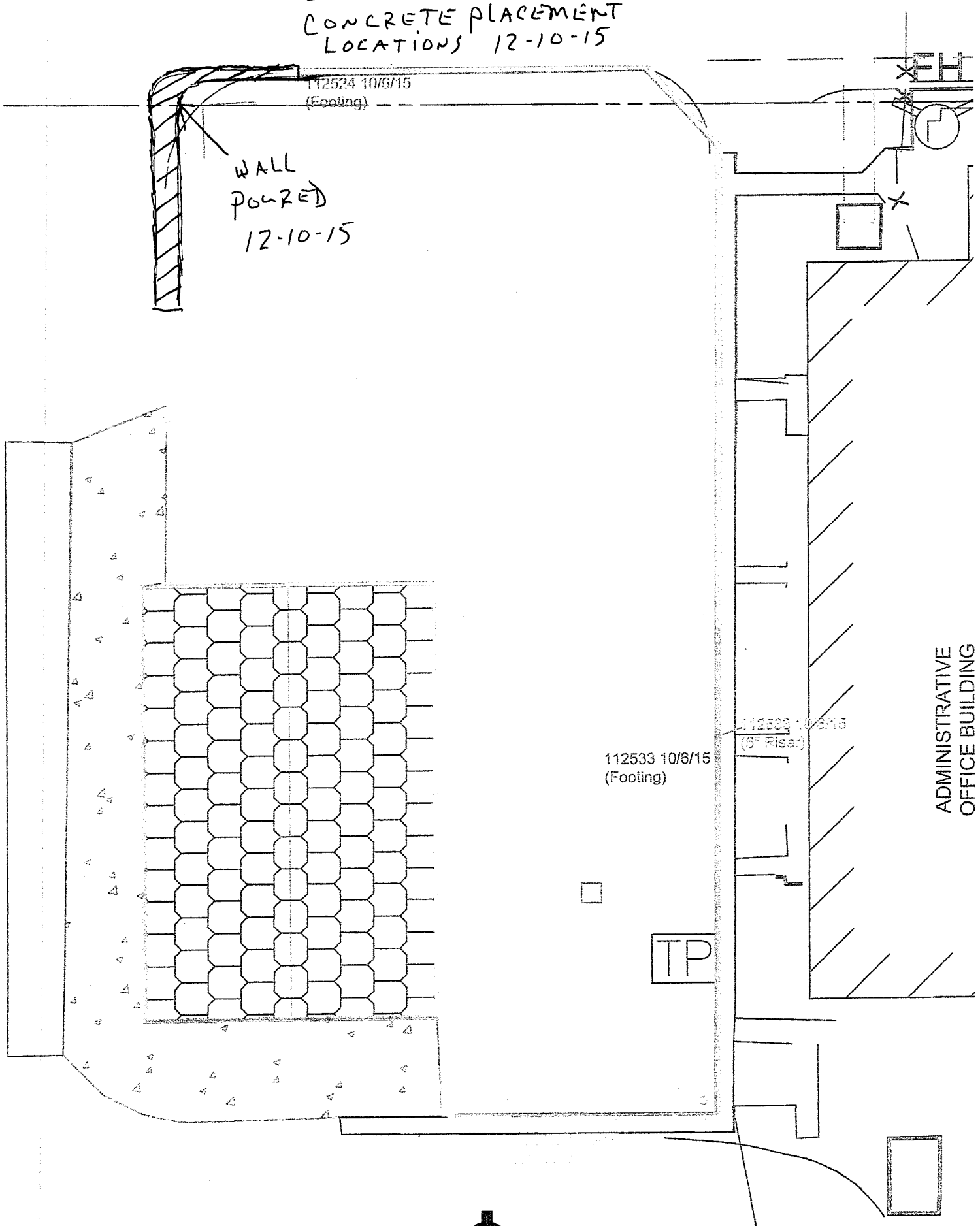

CONCRETE SAMPLE PICK-UP REPORT

Report Number: E1151124.0068
Service Date: 11/24/15
Report Date: 11/30/15

Terracon
110 12th St. North
Birmingham, AL 35203
205-942-1289

Client

Taylor Corporation
Attn: Ellis Bennett
PO Box 3424
Oxford, AL 36203

Project

Solutia OU-3 Remediation
Clydesdale Avenue
Anniston, AL

Project Number: E1151124

Sample Type: 4x8 concrete cylinders

Date Cast: 11/23/15

1 set of 4 samples per set was retrieved and transported to our laboratory and placed in a temperature and humidity-controlled environment for compressive strength testing.

Services:

Terracon Rep.: Kerry Cobb
Reported To: Robby Brown with Brown Construction
Contractor:
Report Distribution:
(1) Taylor Corporation, Emailed
(1) Brown Construction & Development, Emailed

Start/Stop:

Reviewed By: Anthony Cheatwood

The tests were performed in general accordance with applicable ASTM, AASHTO, or DOT test methods. This report is exclusively for the use of the client indicated above and shall not be reproduced except in full without the written consent of our company. Test results transmitted herein are only applicable to the actual samples tested at the location(s) referenced and are not necessarily indicative of the properties of other apparently similar or identical materials.

CONCRETE COMPRESSIVE STRENGTH TEST REPORT

Report Number: E1151124.0067
Service Date: 11/23/15
Report Date: 12/21/15 Revision 1 - 28-day results
Task:

Terracon
110 12th St. North
Birmingham, AL 35203
205-942-1289

Client

Taylor Corporation
Attn: Ellis Bennett
PO Box 3424
Oxford, AL 36203

Project

Solutia OU-3 Remediation
Clydesdale Avenue
Anniston, AL

Project Number: E1151124

Material Information

Specified Strength: 4,000 psi @ 28 days

Mix ID: RM4000
Supplier: WEBB
Batch Time: 1000 **Plant:**
Truck No.: 130 **Ticket No.:** 113799

Sample Information

Sample Date: 11/23/15 **Sample Time:** 1036
Sampled By: Michael Roe
Weather Conditions: Sunny
Accumulative Yards: 6/8 **Batch Size (cy):** 6
Placement Method: Chute
Water Added Before (gal): 0
Water Added After (gal): 0 **Slump After (in):** n/a
Sample Location: See attached drawing for location
Placement Location: Stem wall continuous footing

Field Test Data

Test	Result	Specification
Slump (in):	2 3/4	2 - 6
Air Content (%):	5.25	5 - 8
Concrete Temp. (F):	74	
Ambient Temp. (F):	43	
Plastic Unit Wt. (pcf):	145.6	
Yield (Cu. Yds.):		

Laboratory Test Data

Set No.	Specimen ID	Avg Diam. (in)	Area (sq in)	Date Received	Specimen Weight (lbs)	Date Tested	Age at Test (days)	Maximum Load (lbs)	Compressive Strength (psi)	Fracture Type
26	A	4.00	12.57	11/24/15	8.56	11/30/15	7	49,980	3,980	2
26	B	4.00	12.57	11/24/15	8.66	12/21/15	28	63,380	5,040	2
26	C	4.00	12.57	11/24/15	8.67	12/21/15	28	62,590	4,980	3
							Average (28 days)		**5,010**	
26	D			11/24/15			Hold			

Comments: **Average compressive strength of 28 day cylinders complies with the specified strength.**

Samples Made By: Terracon
Services:

Terracon Rep.: Michael Roe
Reported To: Robby Brown with Brown Construction
Contractor:
Report Distribution:
(1) Taylor Corporation, Emailed
(1) Brown Construction & Development, Emailed

Start/Stop:

Reviewed By: Anthony Cheatwood

Test Methods: ASTM C 31, ASTM C39, ASTM C138, ASTM C143, ASTM C172, ASTM C1064

The tests were performed in general accordance with applicable ASTM, AASHTO, or DOT test methods. This report is exclusively for the use of the client indicated above and shall not be reproduced except in full without the written consent of our company. Test results transmitted herein are only applicable to the actual samples tested at the location(s) referenced and are not necessarily indicative of the properties of other apparently similar or identical materials.

CONCRETE COMPRESSIVE STRENGTH TEST REPORT

Report Number: E1151124.0064
Service Date: 11/19/15
Report Date: 12/17/15 Revision 1 - 28-day results
Task:

Terracon
110 12th St. North
Birmingham, AL 35203
205-942-1289

Client

Taylor Corporation
Attn: Ellis Bennett
PO Box 3424
Oxford, AL 36203

Project

Solutia OU-3 Remediation
Clydesdale Avenue
Anniston, AL

Project Number: E1151124

Material Information

Specified Strength: 4,000 psi @ 28 days

Mix ID: RM4000
Supplier: Webb
Batch Time: 0830 **Plant:** 202
Truck No.: 31 **Ticket No.:** 113724

Sample Information

Sample Date: 11/19/15 **Sample Time:** 0930
Sampled By: Kerry Cobb
Weather Conditions: clear
Accumulative Yards: 3 **Batch Size (cy):** 3
Placement Method: Chute
Water Added Before (gal): 0
Water Added After (gal): 0
Sample Location: walls for sign @ area E
Placement Location: same

Field Test Data

Test	Result	Specification
Slump (in):	4	
Air Content (%):	5.5	
Concrete Temp. (F):	67	
Ambient Temp. (F):	60	
Plastic Unit Wt. (pcf):	145.2	
Yield (Cu. Yds.):		

Laboratory Test Data

Set No.	Specimen ID	Avg Diam. (in)	Area (sq in)	Date Received	Specimen Weight (lbs)	Date Tested	Age at Test (days)	Maximum Load (lbs)	Compressive Strength (psi)	Fracture Type
25	A	4.00	12.57	11/19/15	8.76	11/22/15	3	41,200	3,280	2
25	B	4.00	12.57	11/19/15	8.68	11/26/15	7	56,190	4,470	2
25	C	4.00	12.57	11/19/15	8.77	12/17/15	28	68,830	5,480	2
25	D			11/19/15			Hold			

Comments: **Compressive strength of 28 day cylinders complies with the specified strength.**
n/a

Samples Made By: Terracon
Services:

Terracon Rep.: Kerry Cobb
Reported To: Robby Brown with Brown Construction
Contractor:
Report Distribution:
(1) Taylor Corporation, Emailed
(1) Brown Construction & Development, Emailed

Start/Stop:

Reviewed By: Anthony Chealwood

Test Methods: ASTM C 31, ASTM C39, ASTM C138, ASTM C143, ASTM C172, ASTM C1064

The tests were performed in general accordance with applicable ASTM, AASHTO, or DOT test methods. This report is exclusively for the use of the client indicat above and shall not be reproduced except in full without the written consent of our company. Test results transmitted herein are only applicable to the actual sam tested at the location(s) referenced and are not necessarily indicative of the properties of other apparently similar or identical materials.

CONCRETE COMPRESSIVE STRENGTH TEST REPORT

Report Number: E1151124.0059
Service Date: 11/13/15
Report Date: 11/23/15 Revision 1 - 7-day results
Task:

Terracon
110 12th St. North
Birmingham, AL 35203
205-942-1289

Client

Taylor Corporation
Attn: Ellis Bennett
PO Box 3424
Oxford, AL 36203

Project

Solutia OU-3 Remediation
Clydesdale Avenue
Anniston, AL

Project Number: E1151124

Material Information

Specified Strength: 4,000 psi @ 28 days

Mix ID: RM4000
Supplier: Webb
Batch Time: 0830 **Plant:** 202
Truck No.: 76 **Ticket No.:** 113532

Sample Information

Sample Date: 11/13/15 **Sample Time:** 0900
Sampled By: Kerry Cobb
Weather Conditions: clear
Accumulative Yards: 9 **Batch Size (cy):** 9
Placement Method: Direct Discharge
Water Added Before (gal): 0
Water Added After (gal): 5 **Slump After (in):** 4
Sample Location: slabs @ area A see drawing
Placement Location: same

Field Test Data

Test	Result	Specification
Slump (in):	3	
Air Content (%):	5.0	
Concrete Temp. (F):	64	
Ambient Temp. (F):	60	
Plastic Unit Wt. (pcf):	145.4	
Yield (Cu. Yds.):		

Laboratory Test Data

Set No.	Specimen ID	Avg Diam. (in)	Area (sq in)	Date Received	Specimen Weight (lbs)	Date Tested	Age at Test (days)	Maximum Load (lbs)	Compressive Strength (psi)	Fracture Type
24	A	4.00	12.57	11/13/15	8.63	11/16/15	3	43,100	3,430	2
24	B	4.00	12.57	11/13/15	8.61	11/20/15	7	51,290	4,080	2
24	C	4.00	12.57	11/13/15		12/11/15	28			
24	D			11/13/15			Hold			

Comments: n/a

Samples Made By: Terracon
Services:

Terracon Rep.: Kerry Cobb
Reported To: Robby Brown with Brown Construction
Contractor:
Report Distribution:
(1) Taylor Corporation, Emailed
(1) Brown Construction & Development, Emailed

Start/Stop:

Reviewed By: Anthony Cheatwood

Test Methods:

The tests were performed in general accordance with applicable ASTM, AASHTO, or DOT test methods. This report is exclusively for the use of the client indicat above and shall not be reproduced except in full without the written consent of our company. Test results transmitted herein are only applicable to the actual sam tested at the location(s) referenced and are not necessarily indicative of the properties of other apparently similar or identical materials.

CONCRETE COMPRESSIVE STRENGTH TEST REPORT

Report Number: E1151124.0057
Service Date: 11/12/15
Report Date: 11/18/15
Task:

Terracon
110 12th St. North
Birmingham, AL 35203
205-942-1289

Client

Taylor Corporation
Attn: Ellis Bennett
PO Box 3424
Oxford, AL 36203

Project

Solutia OU-3 Remediation
Clydesdale Avenue
Anniston, AL

Project Number: E1151124

Material Information

Specified Strength: 4,000 psi @ 28 days

Mix ID: RM4000
Supplier: Webb
Batch Time: 0830 **Plant:** 202
Truck No.: 133 **Ticket No.:** 113500

Sample Information

Sample Date: 11/12/15 **Sample Time:** 0900
Sampled By: Kerry Cobb
Weather Conditions: clear
Accumulative Yards: 9 **Batch Size (cy):** 9
Placement Method: Direct Discharge
Water Added Before (gal): 0
Water Added After (gal): 0 **Slump After (in):** 5
Sample Location: slabs @ area A see drawing
Placement Location: same

Field Test Data

Test	Result	Specification
Slump (in):	5	
Air Content (%):	6.0	
Concrete Temp. (F):	70	
Ambient Temp. (F):	66	
Plastic Unit Wt. (pcf):	145.1	
Yield (Cu. Yds.):		

Laboratory Test Data

Set No.	Specimen ID	Avg Diam. (in)	Area (sq in)	Date Received	Date Tested	Age at Test (days)	Maximum Load (lbs)	Compressive Strength (psi)	Fracture Type
23	A	4.00	12.57	11/12/15	11/15/15	3	44,580	3,550	2
23	B	4.00	12.57	11/12/15	11/19/15	7			
23	C	4.00	12.57	11/12/15	12/10/15	28			
23	D			11/12/15		Hold			

Comments: n/a

Samples Made By: Terracon
Services:

Terracon Rep.: Kerry Cobb
Reported To: Robby Brown with Brown Construction
Contractor:
Report Distribution:
(1) Taylor Corporation, Emailed
(1) Brown Construction & Development, Emailed

Start/Stop:

Reviewed By: Anthony Cheatwood

Test Methods: ASTM C 31, ASTM C39, ASTM C138, ASTM C143, ASTM C172, ASTM C1064

The tests were performed in general accordance with applicable ASTM, AASHTO, or DOT test methods. This report is exclusively for the use of the client indicat above and shall not be reproduced except in full without the written consent of our company. Test results transmitted herein are only applicable to the actual sam tested at the location(s) referenced and are not necessarily indicative of the properties of other apparently similar or identical materials.

CONCRETE COMPRESSIVE STRENGTH TEST REPORT

Report Number: E1151124.0051
Service Date: 11/10/15
Report Date: 12/09/15 Revision 2 - 28-day results
Task:

Terracon
110 12th St. North
Birmingham, AL 35203
205-942-1289

Client

Taylor Corporation
Attn: Ellis Bennett
PO Box 3424
Oxford, AL 36203

Project

Solutia OU-3 Remediation
Clydesdale Avenue
Anniston, AL

Project Number: E1151124

Material Information

Specified Strength: 4,000 psi @ 28 days

Mix ID: RM4000
Supplier: Webb
Batch Time: 1100 **Plant:** 202
Truck No.: 73 **Ticket No.:** 113445

Sample Information

Sample Date: 11/10/15 **Sample Time:** 1200
Sampled By: Kerry Cobb
Weather Conditions: clear
Accumulative Yards: 9 **Batch Size (cy):** 9
Placement Method: Direct Discharge
Water Added Before (gal): 0
Water Added After (gal): 0 **Slump After (in):** 4
Sample Location: slab @ area A see drawing
Placement Location: same

Field Test Data

Test	Result	Specification
Slump (in):	4	
Air Content (%):	6.0	
Concrete Temp. (F):	70	
Ambient Temp. (F):	68	
Plastic Unit Wt. (pcf):	145.2	
Yield (Cu. Yds.):		

Laboratory Test Data

Set No.	Specimen ID	Avg Diam. (in)	Area (sq in)	Date Received	Specimen Weight (lbs)	Date Tested	Age at Test (days)	Maximum Load (lbs)	Compressive Strength (psi)	Fracture Type
21	A	4.00	12.57	11/11/15	8.43	11/13/15	3	37,470	2,980	3
21	B	4.00	12.57	11/11/15	8.48	11/17/15	7	40,690	3,240	3
21	C	4.00	12.57	11/11/15	8.48	12/08/15	28	54,000	4,300	2
21	D	4.00	12.57	11/11/15		01/05/16	56			

Comments: **Compressive strength of 28 day cylinders complies with the specified strength.**
second load tested and cylinders taken on this date

Samples Made By: Terracon
Services:

Terracon Rep.: Kerry Cobb
Reported To: Robby Brown with Brown Construction
Contractor:
Report Distribution:
(1) Taylor Corporation, Emailed
(1) Brown Construction & Development, Emailed

Start/Stop:

Reviewed By: Anthony Chealwood

Test Methods: ASTM C 31, ASTM C39, ASTM C138, ASTM C143, ASTM C172, ASTM C1064

The tests were performed in general accordance with applicable ASTM, AASHTO, or DOT test methods. This report is exclusively for the use of the client indicated above and shall not be reproduced except in full without the written consent of our company. Test results transmitted herein are only applicable to the actual samples tested at the location(s) referenced and are not necessarily indicative of the properties of other apparently similar or identical materials.

CONCRETE COMPRESSIVE STRENGTH TEST REPORT

Report Number: E1151124.0051
Service Date: 11/10/15
Report Date: 11/18/15 Revision 1 - 7-day results
Task:

Terracon
110 12th St. North
Birmingham, AL 35203
205-942-1289

Client

Taylor Corporation
Attn: Ellis Bennett
PO Box 3424
Oxford, AL 36203

Project

Solutia OU-3 Remediation
Clydesdale Avenue
Anniston, AL

Project Number: E1151124

Material Information

Specified Strength: 4,000 psi @ 28 days

Mix ID: RM4000
Supplier: Webb
Batch Time: 0830 **Plant:** 202
Truck No.: 132 **Ticket No.:** 113434

Sample Information

Sample Date: 11/10/15 **Sample Time:** 0930
Sampled By: Kerry Cobb
Weather Conditions: clear
Accumulative Yards: 9 **Batch Size (cy):**
Placement Method: Direct Discharge
Water Added Before (gal): 0
Water Added After (gal): 0 **Slump After (in):** 4.5
Sample Location: slab @ area A see drawing
Placement Location: same

Field Test Data

Test	Result	Specification
Slump (in):	4 1/2	
Air Content (%):	4.0	
Concrete Temp. (F):	70	
Ambient Temp. (F):	66	
Plastic Unit Wt. (pcf):	145.5	
Yield (Cu. Yds.):		

Laboratory Test Data

Set No.	Specimen ID	Avg Diam. (in)	Area (sq in)	Date Received	Specimen Weight (lbs)	Date Tested	Age at Test (days)	Maximum Load (lbs)	Compressive Strength (psi)	Fracture Type
20	A	4.00	12.57		8.58	11/13/15	3	42,880	3,410	2
20	B	4.00	12.57		8.63	11/17/15	7	44,640	3,550	3
20	C	4.00	12.57			12/08/15	28			
20	D	4.00	12.57			01/05/16	56			

Comments: this load was sent back after first slab section was poured detailed on drawing

Samples Made By: Terracon
Services:

Terracon Rep.: Kerry Cobb
Reported To: Robby Brown with Brown Construction
Contractor:
Report Distribution:
(1) Taylor Corporation, Emailed
(1) Brown Construction & Development, Emailed

Start/Stop:

Reviewed By: Anthony Chealwood

Test Methods: ASTM C 31, ASTM C39, ASTM C138, ASTM C143, ASTM C172, ASTM C1064

The tests were performed in general accordance with applicable ASTM, AASHTO, or DOT test methods. This report is exclusively for the use of the client indicat above and shall not be reproduced except in full without the written consent of our company. Test results transmitted herein are only applicable to the actual sam tested at the location(s) referenced and are not necessarily indicative of the properties of other apparently similar or identical materials.

CONCRETE COMPRESSIVE STRENGTH TEST REPORT

Report Number: E1151124.0051
Service Date: 11/10/15
Report Date: 11/18/15 Revision 1 - 7-day results
Task:

Terracon
110 12th St. North
Birmingham, AL 35203
205-942-1289

Client

Taylor Corporation
Attn: Ellis Bennett
PO Box 3424
Oxford, AL 36203

Project

Solutia OU-3 Remediation
Clydesdale Avenue
Anniston, AL

Project Number: E1151124

Material Information

Specified Strength: 4,000 psi @ 28 days

Mix ID: RM4000
Supplier: Webb
Batch Time: 1100 **Plant:** 202
Truck No.: 73 **Ticket No.:** 113445

Sample Information

Sample Date: 11/10/15 **Sample Time:** 1200
Sampled By: Kerry Cobb
Weather Conditions: clear
Accumulative Yards: 9 **Batch Size (cy):** 9
Placement Method: Direct Discharge
Water Added Before (gal): 0
Water Added After (gal): 0 **Slump After (in):** 4
Sample Location: slab @ area A see drawing
Placement Location: same

Field Test Data

Test	Result	Specification
Slump (in):	4	
Air Content (%):	6.0	
Concrete Temp. (F):	70	
Ambient Temp. (F):	68	
Plastic Unit Wt. (pcf):	145.2	
Yield (Cu. Yds.):		

Laboratory Test Data

Set No.	Specimen ID	Avg Diam. (in)	Area (sq in)	Date Received	Specimen Weight (lbs)	Date Tested	Age at Test (days)	Maximum Load (lbs)	Compressive Strength (psi)	Fracture Type
21	A	4.00	12.57		8.43	11/13/15	3	37,470	2,980	3
21	B	4.00	12.57		8.48	11/17/15	7	40,690	3,240	3
21	C	4.00	12.57			12/08/15	28			
21	D	4.00	12.57			01/05/16	56			

Comments: second load tested and cylinders taken on this date

Samples Made By: Terracon
Services:

Terracon Rep.: Kerry Cobb
Reported To: Robby Brown with Brown Construction
Contractor:
Report Distribution:
(1) Taylor Corporation, Emailed
(1) Brown Construction & Development, Emailed

Start/Stop:

Reviewed By: Anthony Chealwood

Test Methods: ASTM C 31, ASTM C39, ASTM C138, ASTM C143, ASTM C172, ASTM C1064

The tests were performed in general accordance with applicable ASTM, AASHTO, or DOT test methods. This report is exclusively for the use of the client indicat above and shall not be reproduced except in full without the written consent of our company. Test results transmitted herein are only applicable to the actual sam tested at the location(s) referenced and are not necessarily indicative of the properties of other apparently similar or identical materials.

CONCRETE COMPRESSIVE STRENGTH TEST REPORT

Report Number: E1151124.0047
Service Date: 11/05/15
Report Date: 12/03/15 Revision 2 - 28-day results
Task:

Terracon
110 12th St. North
Birmingham, AL 35203
205-942-1289

Client

Taylor Corporation
Attn: Ellis Bennett
PO Box 3424
Oxford, AL 36203

Project

Solutia OU-3 Remediation
Clydesdale Avenue
Anniston, AL

Project Number: E1151124

Material Information

Specified Strength: 4,000 psi @ 28 days

Mix ID: RM4000
Supplier: Webb
Batch Time: 0830 **Plant:** 202
Truck No.: 133 **Ticket No.:** 113371

Sample Information

Sample Date: 11/05/15 **Sample Time:** 0930
Sampled By: Kerry Cobb
Weather Conditions: cloudy
Accumulative Yards: 9 **Batch Size (cy):** 4
Placement Method: Direct Discharge
Water Added Before (gal): 0
Water Added After (gal): 5 **Slump After (in):** 3.5
Sample Location: slab on grade @ area A see drawing
Placement Location: same

Field Test Data

Test	Result	Specification
Slump (in):	3	
Air Content (%):	5.5	
Concrete Temp. (F):	80	
Ambient Temp. (F):	75	
Plastic Unit Wt. (pcf):	147.0	
Yield (Cu. Yds.):		

Laboratory Test Data

Set No.	Specimen ID	Avg Diam. (in)	Area (sq in)	Date Received	Specimen Weight (lbs)	Date Tested	Age at Test (days)	Maximum Load (lbs)	Compressive Strength (psi)	Fracture Type
19	A	4.00	12.57		8.74	11/09/15	4	38,530	3,070	2
19	B	4.00	12.57		8.66	11/12/15	7	46,290	3,680	2
19	C	4.00	12.57		8.66	12/03/15	28	60,950	4,850	2
19	D						Hold			

Comments: Compressive strength of 28 day cylinders complies with the specified strength.

Samples Made By: Terracon
Services:

Terracon Rep.: Kerry Cobb
Reported To:
Contractor:
Report Distribution:
(1) Taylor Corporation, Emailed
(1) Brown Construction & Development, Emailed

Start/Stop:

Reviewed By: Anthony Cheatwood

Test Methods: ASTM C 31, ASTM C39, ASTM C138, ASTM C143, ASTM C172, ASTM C1064

The tests were performed in general accordance with applicable ASTM, AASHTO, or DOT test methods. This report is exclusively for the use of the client indicated above and shall not be reproduced except in full without the written consent of our company. Test results transmitted herein are only applicable to the actual samples tested at the location(s) referenced and are not necessarily indicative of the properties of other apparently similar or identical materials.

CONCRETE COMPRESSIVE STRENGTH TEST REPORT

Report Number: E1151124.0045
Service Date: 11/04/15
Report Date: 12/03/15 Revision 2 - 28-day results
Task:

Terracon
110 12th St. North
Birmingham, AL 35203
205-942-1289

Client

Taylor Corporation
Attn: Ellis Bennett
PO Box 3424
Oxford, AL 36203

Project

Solutia OU-3 Remediation
Clydesdale Avenue
Anniston, AL

Project Number: E1151124

Material Information

Specified Strength: 4,000 psi @ 28 days

Mix ID: RM4000
Supplier: Webb
Batch Time: 0800 **Plant:** 202
Truck No.: 7 **Ticket No.:** 113317

Sample Information

Sample Date: 11/04/15 **Sample Time:** 0900
Sampled By: Kerry Cobb
Weather Conditions: cloudy
Accumulative Yards: 9 **Batch Size (cy):** 9
Placement Method: Direct Discharge
Water Added Before (gal): 0
Water Added After (gal): 3 **Slump After (in):** 4.5
Sample Location: slab on grade @ area A
Placement Location: same

Field Test Data

Test	Result	Specification
Slump (in):	4	
Air Content (%):	5.0	
Concrete Temp. (F):	75	
Ambient Temp. (F):	70	
Plastic Unit Wt. (pcf):	146.0	
Yield (Cu. Yds.):		

Laboratory Test Data

Set No.	Specimen ID	Avg Diam. (in)	Area (sq in)	Date Received	Specimen Weight (lbs)	Date Tested	Age at Test (days)	Maximum Load (lbs)	Compressive Strength (psi)	Fracture Type
18	A	4.00	12.57		8.69	11/09/15	5	45,660	3,630	2
18	B	4.00	12.57		8.69	11/11/15	7	47,230	3,760	2
18	C	4.00	12.57		8.67	12/02/15	28	64,460	5,130	2
18	D						Hold			

Comments: **Compressive strength of 28 day cylinders complies with the specified strength.**
n/a

Samples Made By: Terracon
Services:

Terracon Rep.: Kerry Cobb
Reported To: Robby Brown with Brown Construction
Contractor: Brown Construction
Report Distribution:
(1) Taylor Corporation, Emailed
(1) Brown Construction & Development, Emailed

Start/Stop:

Reviewed By: Anthony Cheatwood

Test Methods: ASTM C 31, ASTM C39, ASTM C138, ASTM C143, ASTM C172, ASTM C1064

The tests were performed in general accordance with applicable ASTM, AASHTO, or DOT test methods. This report is exclusively for the use of the client indicated above and shall not be reproduced except in full without the written consent of our company. Test results transmitted herein are only applicable to the actual samples tested at the location(s) referenced and are not necessarily indicative of the properties of other apparently similar or identical materials.

CONCRETE COMPRESSIVE STRENGTH TEST REPORT

Report Number: E1151124.0040
Service Date: 10/30/15
Report Date: 11/30/15 Revision 2 - 28-day results
Task:

Terracon
110 12th St. North
Birmingham, AL 35203
205-942-1289

Client

Taylor Corporation
Attn: Ellis Bennett
PO Box 3424
Oxford, AL 36203

Project

Solutia OU-3 Remediation
Clydesdale Avenue
Anniston, AL

Project Number: E1151124

Material Information

Specified Strength: 4,000 psi @ 28 days

Mix ID: RM4000
Supplier: Webb
Batch Time: 0830 **Plant:** 202
Truck No.: 31 **Ticket No.:** 113235

Sample Information

Sample Date: 10/30/15 **Sample Time:** 0930
Sampled By: Kerry Cobb
Weather Conditions: clear
Accumulative Yards: 9 **Batch Size (cy):** 9
Placement Method: Direct Discharge
Water Added Before (gal): 0
Water Added After (gal): 0 **Slump After (in):** 5
Sample Location: slab on grade @ area A see drawing
Placement Location: same

Field Test Data

Test	Result	Specification
Slump (in):	5	
Air Content (%):	6.8	5 - 8
Concrete Temp. (F):	65	Max 90
Ambient Temp. (F):	60	
Plastic Unit Wt. (pcf):	144.0	
Yield (Cu. Yds.):		

Laboratory Test Data

Set No.	Specimen ID	Avg Diam. (in)	Area (sq in)	Date Received	Specimen Weight (lbs)	Date Tested	Age at Test (days)	Maximum Load (lbs)	Compressive Strength (psi)	Fracture Type
17	A	4.00	12.57	10/31/15	8.38	11/02/15	3	30,740	2,450	2
17	B	4.00	12.57	10/31/15	8.56	11/06/15	7	45,850	3,650	3
17	C	4.00	12.57	10/31/15	8.40	11/27/15	28	56,580	4,500	2
17	D			10/31/15			Hold			

Comments: **Compressive strength of 28 day cylinders complies with the specified strength.**
n/a

Samples Made By: Terracon
Services:

Terracon Rep.: Kerry Cobb
Reported To:
Contractor:
Report Distribution:
(1) Taylor Corporation, Emailed
(1) Brown Construction & Development, Emailed

Start/Stop:

Reviewed By: Anthony Cheatwood

Test Methods: ASTM C 31, ASTM C39, ASTM C138, ASTM C143, ASTM C172, ASTM C1064

The tests were performed in general accordance with applicable ASTM, AASHTO, or DOT test methods. This report is exclusively for the use of the client indicated above and shall not be reproduced except in full without the written consent of our company. Test results transmitted herein are only applicable to the actual samples tested at the location(s) referenced and are not necessarily indicative of the properties of other apparently similar or identical materials.

CONCRETE COMPRESSIVE STRENGTH TEST REPORT

Report Number: E1151124.0035
Service Date: 10/23/15
Report Date: 11/23/15 Revision 2 - 28-day results
Task:

Terracon
110 12th St. North
Birmingham, AL 35203
205-942-1289

Client

Taylor Corporation
Attn: Ellis Bennett
PO Box 3424
Oxford, AL 36203

Project

Solutia OU-3 Remediation
Clydesdale Avenue
Anniston, AL

Project Number: E1151124

Material Information

Specified Strength: 4,000 psi @ 28 days

Mix ID: RM4000
Supplier: Webb
Batch Time: 1300 **Plant:** 202
Truck No.: 132 **Ticket No.:** 113149

Sample Information

Sample Date: 10/23/15 **Sample Time:** 1400
Sampled By: Kerry Cobb
Weather Conditions: clear
Accumulative Yards: 7.50 **Batch Size (cy):** 7.5
Placement Method: Chute
Water Added Before (gal): 0
Water Added After (gal): 4 **Slump After (in):** 4
Sample Location: walls @ area E see drawing
Placement Location: same

Field Test Data

Test	Result	Specification
Slump (in):	3 1/2	
Air Content (%):	6.8	5 - 8
Concrete Temp. (F):	84	Max 90
Ambient Temp. (F):	82	
Plastic Unit Wt. (pcf):	144.2	
Yield (Cu. Yds.):		

Laboratory Test Data

Set No.	Specimen ID	Avg Diam. (in)	Area (sq in)	Date Received	Specimen Weight (lbs)	Date Tested	Age at Test (days)	Maximum Load (lbs)	Compressive Strength (psi)	Fracture Type
15	A	4.00	12.57	10/24/15	8.71	10/26/15	3	35,370	2,810	2
15	B	4.00	12.57	10/24/15	8.57	10/30/15	7	39,910	3,180	2
15	C	4.00	12.57	10/24/15	8.44	11/20/15	28	57,720	4,590	2
15	D	4.00	12.57	10/24/15	8.58	11/20/15	28	53,900	4,290	2
							Average (28 days)		**4,440**	
15	E	4.00	12.57	10/24/15		12/18/15	56			

Comments: **Average compressive strength of 28 day cylinders complies with the specified strength.**
same

Samples Made By: Terracon
Services:

Terracon Rep.: Kerry Cobb
Reported To: Robby Brown with Brown Construction
Contractor:
Report Distribution:
(1) Taylor Corporation, Emailed
(1) Brown Construction & Development, Emailed

Start/Stop:

Reviewed By: Anthony Cheatwood

Test Methods: ASTM C 31, ASTM C39, ASTM C138, ASTM C143, ASTM C172, ASTM C1064

The tests were performed in general accordance with applicable ASTM, AASHTO, or DOT test methods. This report is exclusively for the use of the client indicat above and shall not be reproduced except in full without the written consent of our company. Test results transmitted herein are only applicable to the actual sam tested at the location(s) referenced and are not necessarily indicative of the properties of other apparently similar or identical materials.

CONCRETE COMPRESSIVE STRENGTH TEST REPORT

Report Number: E1151124.0028
Service Date: 10/14/15
Report Date: 11/12/15 Revision 1 - 28-day results
Task:

Terracon
110 12th St. North
Birmingham, AL 35203
205-942-1289

Client

Taylor Corporation
Attn: Ellis Bennett
PO Box 3424
Oxford, AL 36203

Project

Solutia OU-3 Remediation
Clydesdale Avenue
Anniston, AL

Project Number: E1151124

Material Information

Specified Strength: 4,000 psi @ 28 days

Mix ID: RM4000
Supplier: Webb
Batch Time: 0730 **Plant:** 202
Truck No.: 71 **Ticket No.:** 112791

Sample Information

Sample Date: 10/14/15 **Sample Time:** 0800
Sampled By: Kerry Cobb
Weather Conditions: clear
Accumulative Yards: 9 **Batch Size (cy):** 9
Placement Method: Direct Discharge
Water Added Before (gal): 0
Water Added After (gal): 0 **Slump After (in):** n/a
Sample Location: slab @ area A see drawing
Placement Location: same

Field Test Data

Test	Result	Specification
Slump (in):	4 1/2	
Air Content (%):	5.0	
Concrete Temp. (F):	72	
Ambient Temp. (F):	66	
Plastic Unit Wt. (pcf):	144.9	
Yield (Cu. Yds.):		

Laboratory Test Data

Set No.	Specimen ID	Avg Diam. (in)	Area (sq in)	Date Received	Specimen Weight (lbs)	Date Tested	Age at Test (days)	Maximum Load (lbs)	Compressive Strength (psi)	Fracture Type
13	A	4.00	12.57	10/15/15	8.70	10/19/15	5	46,300	3,680	2
13	B	4.00	12.57	10/15/15	8.72	10/21/15	7	44,560	3,550	2
13	C	4.00	12.57	10/15/15	8.75	11/11/15	28	63,710	5,070	2
13	D	4.00	12.57	10/15/15	8.74	11/11/15	28	61,080	4,860	2
							Average (28 days)		**4,970**	
13	E	4.00	12.57	10/15/15		12/09/15	56			

Comments: **Average compressive strength of 28 day cylinders complies with the specified strength.**
n/a

Samples Made By: Terracon
Services:

Terracon Rep.: Kerry Cobb
Reported To: Robby Brown with Brown Construction
Contractor:
Report Distribution:
(1) Taylor Corporation, Emailed
(1) Brown Construction & Development, Emailed

Start/Stop:

Reviewed By: Anthony Chealwood

Test Methods: ASTM C 31, ASTM C39, ASTM C138, ASTM C143, ASTM C172, ASTM C1064

The tests were performed in general accordance with applicable ASTM, AASHTO, or DOT test methods. This report is exclusively for the use of the client indicated above and shall not be reproduced except in full without the written consent of our company. Test results transmitted herein are only applicable to the actual samples tested at the location(s) referenced and are not necessarily indicative of the properties of other apparently similar or identical materials.

CONCRETE COMPRESSIVE STRENGTH TEST REPORT

Report Number: E1151124.0023
Service Date: 10/12/15
Report Date: 11/09/15 Revision 2 - 28-day results
Task:

Terracon
110 12th St. North
Birmingham, AL 35203
205-942-1289

Client

Taylor Corporation
Attn: Ellis Bennett
PO Box 3424
Oxford, AL 36203

Project

Solutia OU-3 Remediation
Clydesdale Avenue
Anniston, AL

Project Number: E1151124

Material Information

Specified Strength: 4,000 psi @ 28 days

Mix ID: RM4000
Supplier: Webb
Batch Time: 1030 **Plant:** 202
Truck No.: 76 **Ticket No.:** 112735

Sample Information

Sample Date: 10/12/15 **Sample Time:** 1130
Sampled By: Kerry Cobb
Weather Conditions: clear
Accumulative Yards: 18 **Batch Size (cy):** 9
Placement Method: Direct Discharge
Water Added Before (gal): 0
Water Added After (gal): 0 **Slump After (in):** 5
Sample Location: slab @ area A see drawing
Placement Location: same

Field Test Data

Test	Result	Specification
Slump (in):	5	
Air Content (%):	5.0	
Concrete Temp. (F):	76	
Ambient Temp. (F):	71	
Plastic Unit Wt. (pcf):	145.0	
Yield (Cu. Yds.):		

Laboratory Test Data

Set No.	Specimen ID	Avg Diam. (in)	Area (sq in)	Date Received	Specimen Weight (lbs)	Date Tested	Age at Test (days)	Maximum Load (lbs)	Compressive Strength (psi)	Fracture Type
11	A	4.00	12.57	10/12/15	8.69	10/15/15	3	37,370	2,970	2
11	B	4.00	12.57	10/12/15	8.72	10/19/15	7	42,020	3,340	3
11	C	4.00	12.57	10/12/15	8.77	11/09/15	28	58,390	4,650	2
11	D	4.00	12.57	10/12/15	8.71	11/09/15	28	58,260	4,640	2
							Average (28 days)		**4,640**	
11	E	4.00	12.57	10/12/15		12/07/15	56			

Comments: **Average compressive strength of 28 day cylinders complies with the specified strength.**
n/a

Samples Made By: Terracon
Services:

Terracon Rep.: Kerry Cobb
Reported To: Robby Brown with Brown Construction
Contractor:
Report Distribution:
(1) Taylor Corporation, Emailed
(1) Brown Construction & Development, Emailed

Start/Stop:

Reviewed By: Anthony Cheatwood

Test Methods: ASTM C 31, ASTM C39, ASTM C138, ASTM C143, ASTM C172, ASTM C1064

The tests were performed in general accordance with applicable ASTM, AASHTO, or DOT test methods. This report is exclusively for the use of the client indicat above and shall not be reproduced except in full without the written consent of our company. Test results transmitted herein are only applicable to the actual sam tested at the location(s) referenced and are not necessarily indicative of the properties of other apparently similar or identical materials.

CONCRETE COMPRESSIVE STRENGTH TEST REPORT

Report Number: E1151124.0023
Service Date: 10/12/15
Report Date: 11/09/15 Revision 2 - 28-day results
Task:

Terracon
110 12th St. North
Birmingham, AL 35203
205-942-1289

Client

Taylor Corporation
Attn: Ellis Bennett
PO Box 3424
Oxford, AL 36203

Project

Solutia OU-3 Remediation
Clydesdale Avenue
Anniston, AL

Project Number: E1151124

Material Information

Specified Strength: 4,000 psi @ 28 days

Mix ID: RM4000
Supplier: Webb
Batch Time: 0930 **Plant:** 202
Truck No.: 133 **Ticket No.:** 112731

Sample Information

Sample Date: 10/12/15 **Sample Time:** 1030
Sampled By: Kerry Cobb
Weather Conditions: clear
Accumulative Yards: 9 **Batch Size (cy):** 9
Placement Method: Direct Discharge
Water Added Before (gal): 0
Water Added After (gal): 0 **Slump After (in):** 4
Sample Location: slab @ area A see drawing
Placement Location: same

Field Test Data

Test	Result	Specification
Slump (in):	4	
Air Content (%):	5.0	
Concrete Temp. (F):	75	
Ambient Temp. (F):	70	
Plastic Unit Wt. (pcf):	144.9	
Yield (Cu. Yds.):		

Laboratory Test Data

Set No.	Specimen ID	Avg Diam. (in)	Area (sq in)	Date Received	Specimen Weight (lbs)	Date Tested	Age at Test (days)	Maximum Load (lbs)	Compressive Strength (psi)	Fracture Type
10	A	4.00	12.57	10/12/15	8.56	10/15/15	3	42,070	3,350	3
10	B	4.00	12.57	10/12/15	8.71	10/19/15	7	45,780	3,640	2
10	C	4.00	12.57	10/12/15	8.71	11/09/15	28	65,700	5,230	2
10	D	4.00	12.57	10/12/15	8.66	11/09/15	28	61,580	4,900	2
							Average (28 days)		**5,060**	
10	E	4.00	12.57	10/12/15		12/07/15	56			

Comments: **Average compressive strength of 28 day cylinders complies with the specified strength.**
n/a

Samples Made By: Terracon
Services:

Terracon Rep.: Kerry Cobb
Reported To: Robby Brown with Brown Construction
Contractor:
Report Distribution:
(1) Taylor Corporation, Emailed
(1) Brown Construction & Development, Emailed

Start/Stop:

Reviewed By: Anthony Chealwood

Test Methods: ASTM C 31, ASTM C39, ASTM C138, ASTM C143, ASTM C172, ASTM C1064

The tests were performed in general accordance with applicable ASTM, AASHTO, or DOT test methods. This report is exclusively for the use of the client indicat above and shall not be reproduced except in full without the written consent of our company. Test results transmitted herein are only applicable to the actual sam tested at the location(s) referenced and are not necessarily indicative of the properties of other apparently similar or identical materials.

CONCRETE COMPRESSIVE STRENGTH TEST REPORT

Report Number: E1151124.0023
Service Date: 10/12/15
Report Date: 11/09/15 Revision 2 - 28-day results
Task:

Terracon
110 12th St. North
Birmingham, AL 35203
205-942-1289

Client

Taylor Corporation
Attn: Ellis Bennett
PO Box 3424
Oxford, AL 36203

Project

Solutia OU-3 Remediation
Clydesdale Avenue
Anniston, AL

Project Number: E1151124

Material Information

Specified Strength: 4,000 psi @ 28 days

Mix ID: RM4000
Supplier: Webb
Batch Time: 1030 **Plant:** 202
Truck No.: 76 **Ticket No.:** 112735

Sample Information

Sample Date: 10/12/15 **Sample Time:** 1130
Sampled By: Kerry Cobb
Weather Conditions: clear
Accumulative Yards: 18 **Batch Size (cy):** 9
Placement Method: Direct Discharge
Water Added Before (gal): 0
Water Added After (gal): 0 **Slump After (in):** 5
Sample Location: slab @ area A see drawing
Placement Location: same

Field Test Data

Test	Result	Specification
Slump (in):	5	
Air Content (%):	5.0	
Concrete Temp. (F):	76	
Ambient Temp. (F):	71	
Plastic Unit Wt. (pcf):	145.0	
Yield (Cu. Yds.):		

Laboratory Test Data

Set No.	Specimen ID	Avg Diam. (in)	Area (sq in)	Date Received	Specimen Weight (lbs)	Date Tested	Age at Test (days)	Maximum Load (lbs)	Compressive Strength (psi)	Fracture Type
11	A	4.00	12.57	10/12/15	8.69	10/15/15	3	37,370	2,970	2
11	B	4.00	12.57	10/12/15	8.72	10/19/15	7	42,020	3,340	3
11	C	4.00	12.57	10/12/15	8.77	11/09/15	28	58,390	4,650	2
11	D	4.00	12.57	10/12/15	8.71	11/09/15	28	58,260	4,640	2
							Average (28 days)		**4,640**	
11	E	4.00	12.57	10/12/15		12/07/15	56			

Comments: **Average compressive strength of 28 day cylinders complies with the specified strength.**
n/a

Samples Made By: Terracon
Services:

Terracon Rep.: Kerry Cobb
Reported To: Robby Brown with Brown Construction
Contractor:
Report Distribution:
(1) Taylor Corporation, Emailed
(1) Brown Construction & Development, Emailed

Start/Stop:

Reviewed By: Anthony Cheatwood

Test Methods: ASTM C 31, ASTM C39, ASTM C138, ASTM C143, ASTM C172, ASTM C1064

The tests were performed in general accordance with applicable ASTM, AASHTO, or DOT test methods. This report is exclusively for the use of the client indicat above and shall not be reproduced except in full without the written consent of our company. Test results transmitted herein are only applicable to the actual sam tested at the location(s) referenced and are not necessarily indicative of the properties of other apparently similar or identical materials.

CONCRETE COMPRESSIVE STRENGTH TEST REPORT

Report Number: E1151124.0019
Service Date: 10/09/15
Report Date: 11/09/15 Revision 2 - 28-day results
Task:

Terracon
110 12th St. North
Birmingham, AL 35203
205-942-1289

Client

Taylor Corporation
Attn: Ellis Bennett
PO Box 3424
Oxford, AL 36203

Project

Solutia OU-3 Remediation
Clydesdale Avenue
Anniston, AL

Project Number: E1151124

Material Information

Specified Strength: 4,000 psi @ 28 days

Mix ID: RM4000
Supplier: Webb
Batch Time: 0830 **Plant:** 202
Truck No.: 73 **Ticket No.:** 112678

Sample Information

Sample Date: 10/09/15 **Sample Time:** 0900
Sampled By: Kerry Cobb
Weather Conditions: cloudy
Accumulative Yards: 9 **Batch Size (cy):** 9
Placement Method: Direct Discharge
Water Added Before (gal): 0
Water Added After (gal): 5 **Slump After (in):** 5
Sample Location: area A slab on grade see drawing
Placement Location: same

Field Test Data

Test	Result	Specification
Slump (in):	3	
Air Content (%):	5.0	
Concrete Temp. (F):	80	
Ambient Temp. (F):	70	
Plastic Unit Wt. (pcf):	144.8	
Yield (Cu. Yds.):		

Laboratory Test Data

Set No.	Specimen ID	Avg Diam. (in)	Area (sq in)	Date Received	Specimen Weight (lbs)	Date Tested	Age at Test (days)	Maximum Load (lbs)	Compressive Strength (psi)	Fracture Type
9	A	4.00	12.57	10/09/15	8.64	10/12/15	3	39,740	3,160	2
9	B	4.00	12.57	10/09/15	8.62	10/16/15	7	48,150	3,830	3
9	C	4.00	12.57	10/09/15	8.65	11/06/15	28	55,210	4,390	3
9	D	4.00	12.57	10/09/15	8.65	11/06/15	28	62,700	4,990	3
							Average (28 days)		**4,690**	
9	E			10/09/15			Hold			

Comments: **Average compressive strength of 28 day cylinders complies with the specified strength.**
n/a

Samples Made By: Terracon
Services:

Terracon Rep.: Kerry Cobb
Reported To: Robby Brown with Brown Construction
Contractor:
Report Distribution:
(1) Taylor Corporation, Emailed
(1) Brown Construction & Development, Emailed

Start/Stop:

Reviewed By: Anthony Chealwood

Test Methods: ASTM C 31, ASTM C39, ASTM C138, ASTM C143, ASTM C172, ASTM C1064

The tests were performed in general accordance with applicable ASTM, AASHTO, or DOT test methods. This report is exclusively for the use of the client indicated above and shall not be reproduced except in full without the written consent of our company. Test results transmitted herein are only applicable to the actual samples tested at the location(s) referenced and are not necessarily indicative of the properties of other apparently similar or identical materials.

CONCRETE COMPRESSIVE STRENGTH TEST REPORT

Report Number: E1151124.0016
Service Date: 10/06/15
Report Date: 11/09/15 Revision 2 - 28-day results
Task:

Terracon
110 12th St. North
Birmingham, AL 35203
205-942-1289

Client

Taylor Corporation
Attn: Ellis Bennett
PO Box 3424
Oxford, AL 36203

Project

Solutia OU-3 Remediation
Clydesdale Avenue
Anniston, AL

Project Number: E1151124

Material Information

Specified Strength: 4,000 psi @ 28 days

Mix ID: RM4000
Supplier: Webb
Batch Time: 1030 **Plant:** 202
Truck No.: 7 **Ticket No.:** 112533

Sample Information

Sample Date: 10/06/15 **Sample Time:** 1100
Sampled By: Kerry Cobb
Weather Conditions: clear
Accumulative Yards: 18 **Batch Size (cy):** 9
Placement Method: Chute
Water Added Before (gal): 0
Water Added After (gal): 0 **Slump After (in):** n/a
Sample Location: retaining wall footings @ area E see drawing
Placement Location: same

Field Test Data

Test	Result	Specification
Slump (in):	4	2 - 4
Air Content (%):	5.5	5 - 8
Concrete Temp. (F):	79	Max 90
Ambient Temp. (F):	76	
Plastic Unit Wt. (pcf):	144.9	
Yield (Cu. Yds.):		

Laboratory Test Data

Set No.	Specimen ID	Avg Diam. (in)	Area (sq in)	Date Received	Specimen Weight (lbs)	Date Tested	Age at Test (days)	Maximum Load (lbs)	Compressive Strength (psi)	Fracture Type
8	A	4.00	12.57	10/07/15	8.49	10/09/15	3	37,930	3,020	3
8	B	4.00	12.57	10/07/15	8.63	10/13/15	7	48,130	3,830	3
8	C	4.00	12.57	10/07/15	8.67	11/03/15	28	57,000	4,540	2
8	D	4.00	12.57	10/07/15	8.62	11/03/15	28	58,880	4,690	3
							Average (28 days)		**4,610**	
8	E			10/07/15			Hold			

Comments: **Average compressive strength of 28 day cylinders complies with the specified strength.**
n/a

Samples Made By: Terracon
Services:

Terracon Rep.: Kerry Cobb
Reported To: Robby Brown with Brown Construction
Contractor:
Report Distribution:
(1) Taylor Corporation, Emailed
(1) Brown Construction & Development, Emailed

Start/Stop:

Reviewed By: Anthony Chealwood

Test Methods: ASTM C 31, ASTM C39, ASTM C138, ASTM C143, ASTM C172, ASTM C1064

The tests were performed in general accordance with applicable ASTM, AASHTO, or DOT test methods. This report is exclusively for the use of the client indicated above and shall not be reproduced except in full without the written consent of our company. Test results transmitted herein are only applicable to the actual samples tested at the location(s) referenced and are not necessarily indicative of the properties of other apparently similar or identical materials.

CONCRETE COMPRESSIVE STRENGTH TEST REPORT

Report Number: E1151124.0016
Service Date: 10/06/15
Report Date: 11/09/15 Revision 2 - 28-day results
Task:

Terracon
110 12th St. North
Birmingham, AL 35203
205-942-1289

Client

Taylor Corporation
Attn: Ellis Bennett
PO Box 3424
Oxford, AL 36203

Project

Solutia OU-3 Remediation
Clydesdale Avenue
Anniston, AL

Project Number: E1151124

Material Information

Specified Strength: 4,000 psi @ 28 days

Mix ID: RM4000
Supplier: Webb
Batch Time: 0930 **Plant:** 202
Truck No.: 69 **Ticket No.:** 112524

Sample Information

Sample Date: 10/06/15 **Sample Time:** 1000
Sampled By: Kerry Cobb
Weather Conditions: clear
Accumulative Yards: 9 **Batch Size (cy):** 9
Placement Method: Chute
Water Added Before (gal): 0
Water Added After (gal): 0 **Slump After (in):** n/a
Sample Location: retaining wall footings @ area E see drawing
Placement Location: same

Field Test Data

Test	Result	Specification
Slump (in):	4	2 - 4
Air Content (%):	5.0	5 - 8
Concrete Temp. (F):	79	Max 90
Ambient Temp. (F):	75	
Plastic Unit Wt. (pcf):	145.0	
Yield (Cu. Yds.):		

Laboratory Test Data

Set No.	Specimen ID	Avg Diam. (in)	Area (sq in)	Date Received	Specimen Weight (lbs)	Date Tested	Age at Test (days)	Maximum Load (lbs)	Compressive Strength (psi)	Fracture Type
7	A	4.00	12.57	10/07/15	8.50	10/09/15	3	37,690	3,000	2
7	B	4.00	12.57	10/07/15	8.69	10/13/15	7	51,060	4,060	2
7	C	4.00	12.57	10/07/15	8.69	11/03/15	28	60,700	4,830	2
7	D	4.00	12.57	10/07/15	8.67	11/03/15	28	60,580	4,820	2
							Average (28 days)		**4,830**	
7	E			10/07/15			Hold			

Comments: **Average compressive strength of 28 day cylinders complies with the specified strength.**
n/a

Samples Made By: Terracon
Services:

Terracon Rep.: Kerry Cobb
Reported To: Robby Brown with Brown Construction
Contractor:
Report Distribution:
(1) Taylor Corporation, Emailed
(1) Brown Construction & Development, Emailed

Start/Stop:

Reviewed By: Anthony Chealwood

Test Methods: ASTM C 31, ASTM C39, ASTM C138, ASTM C143, ASTM C172, ASTM C1064

The tests were performed in general accordance with applicable ASTM, AASHTO, or DOT test methods. This report is exclusively for the use of the client indicated above and shall not be reproduced except in full without the written consent of our company. Test results transmitted herein are only applicable to the actual samples tested at the location(s) referenced and are not necessarily indicative of the properties of other apparently similar or identical materials.

CONCRETE COMPRESSIVE STRENGTH TEST REPORT

Report Number: E1151124.0016
Service Date: 10/06/15
Report Date: 11/09/15 Revision 2 - 28-day results
Task:

Terracon
110 12th St. North
Birmingham, AL 35203
205-942-1289

Client

Taylor Corporation
Attn: Ellis Bennett
PO Box 3424
Oxford, AL 36203

Project

Solutia OU-3 Remediation
Clydesdale Avenue
Anniston, AL

Project Number: E1151124

Material Information

Specified Strength: 4,000 psi @ 28 days

Mix ID: RM4000
Supplier: Webb
Batch Time: 1030 **Plant:** 202
Truck No.: 7 **Ticket No.:** 112533

Sample Information

Sample Date: 10/06/15 **Sample Time:** 1100
Sampled By: Kerry Cobb
Weather Conditions: clear
Accumulative Yards: 18 **Batch Size (cy):** 9
Placement Method: Chute
Water Added Before (gal): 0
Water Added After (gal): 0 **Slump After (in):** n/a
Sample Location: retaining wall footings @ area E see drawing
Placement Location: same

Field Test Data

Test	Result	Specification
Slump (in):	4	2 - 4
Air Content (%):	5.5	5 - 8
Concrete Temp. (F):	79	Max 90
Ambient Temp. (F):	76	
Plastic Unit Wt. (pcf):	144.9	
Yield (Cu. Yds.):		

Laboratory Test Data

Set No.	Specimen ID	Avg Diam. (in)	Area (sq in)	Date Received	Specimen Weight (lbs)	Date Tested	Age at Test (days)	Maximum Load (lbs)	Compressive Strength (psi)	Fracture Type
8	A	4.00	12.57	10/07/15	8.49	10/09/15	3	37,930	3,020	3
8	B	4.00	12.57	10/07/15	8.63	10/13/15	7	48,130	3,830	3
8	C	4.00	12.57	10/07/15	8.67	11/03/15	28	57,000	4,540	2
8	D	4.00	12.57	10/07/15	8.62	11/03/15	28	58,880	4,690	3
							Average (28 days)		**4,610**	
8	E			10/07/15			Hold			

Comments: **Average compressive strength of 28 day cylinders complies with the specified strength.**
n/a

Samples Made By: Terracon
Services:

Terracon Rep.: Kerry Cobb
Reported To: Robby Brown with Brown Construction
Contractor:
Report Distribution:
(1) Taylor Corporation, Emailed
(1) Brown Construction & Development, Emailed

Start/Stop:

Reviewed By: Anthony Chealwood

Test Methods: ASTM C 31, ASTM C39, ASTM C138, ASTM C143, ASTM C172, ASTM C1064

The tests were performed in general accordance with applicable ASTM, AASHTO, or DOT test methods. This report is exclusively for the use of the client indicated above and shall not be reproduced except in full without the written consent of our company. Test results transmitted herein are only applicable to the actual samples tested at the location(s) referenced and are not necessarily indicative of the properties of other apparently similar or identical materials.

CONCRETE COMPRESSIVE STRENGTH TEST REPORT

Report Number: E1151124.0091A
Service Date: 04/29/16
Report Date: 05/27/16 Revision 2 - 28-day results
Task:

Terracon
110 12th St N
Birmingham, AL 35203-1537
205-942-1289

Client

Taylor Corporation
Attn: Ellis Bennett
PO Box 3424
Oxford, AL 36203

Project

Solutia OU-3 Remediation
Clydesdale Avenue
Anniston, AL

Project Number: E1151124

Material Information

Specified Strength: 4,000 psi @ 28 days

Mix ID: RM4020
Supplier: Webb
Batch Time: 1230 **Plant:** 202
Truck No.: 132 **Ticket No.:** 118352

Sample Information

Sample Date: 04/29/16 **Sample Time:** 1300
Sampled By: Kerry Cobb
Weather Conditions: p.cloudy
Accumulative Yards: 6 **Batch Size (cy):** 6
Placement Method: Chute
Water Added Before (gal): 0
Water Added After (gal): 0 **Slump After (in):** n/a
Sample Location: wall section @ area E
Placement Location: same

Field Test Data

Test	Result	Specification
Slump (in):	4 1/2	
Air Content (%):	5.5	
Concrete Temp. (F):	86	
Ambient Temp. (F):	82	
Plastic Unit Wt. (pcf):	144.6	
Yield (Cu. Yds.):		

Laboratory Test Data

Set No.	Specimen ID	Avg Diam. (in)	Area (sq in)	Date Received	Specimen Weight (lbs)	Date Tested	Age at Test (days)	Maximum Load (lbs)	Compressive Strength (psi)	Fracture Type
38	A	4.00	12.57	05/02/16	8.50	05/02/16	3	35,030	2,790	2
38	B	4.00	12.57	05/02/16	8.63	05/06/16	7	38,890	3,090	2
38	C	4.00	12.57	05/02/16	8.68	05/27/16	28	52,420	4,170	2
38	D			05/02/16			Hold			

Comments: **Compressive strength of 28 day cylinders complies with the specified strength.**
n/a

Samples Made By: Terracon
Services:

Terracon Rep.: Kerry Cobb
Reported To: Don with Willliams Services
Contractor:
Report Distribution:
(1) Taylor Corporation, Emailed
(1) Brown Construction & Development, Emailed

Start/Stop:

Reviewed By: Anthony Cheatwood

Test Methods: ASTM C 31, ASTM C39, ASTM C138, ASTM C143, ASTM C172, ASTM C1064

The tests were performed in general accordance with applicable ASTM, AASHTO, or DOT test methods. This report is exclusively for the use of the client indicat above and shall not be reproduced except in full without the written consent of our company. Test results transmitted herein are only applicable to the actual sam tested at the location(s) referenced and are not necessarily indicative of the properties of other apparently similar or identical materials.

CONCRETE COMPRESSIVE STRENGTH TEST REPORT

Report Number: E1151124.0091A
Service Date: 04/29/16
Report Date: 05/06/16 Revision 1 - 7-day results
Task:

Terracon
110 12th St N
Birmingham, AL 35203-1537
205-942-1289

Client

Taylor Corporation
Attn: Ellis Bennett
PO Box 3424
Oxford, AL 36203

Project

Solutia OU-3 Remediation
Clydesdale Avenue
Anniston, AL

Project Number: E1151124

Material Information

Specified Strength: 4,000 psi @ 28 days

Mix ID: RM4020
Supplier: Webb
Batch Time: 1230 **Plant:** 202
Truck No.: 132 **Ticket No.:** 118352

Sample Information

Sample Date: 04/29/16 **Sample Time:** 1300
Sampled By: Kerry Cobb
Weather Conditions: p.cloudy
Accumulative Yards: 6 **Batch Size (cy):** 6
Placement Method: Chute
Water Added Before (gal): 0
Water Added After (gal): 0 **Slump After (in):** n/a
Sample Location: wall section @ area E
Placement Location: same

Field Test Data

Test	Result	Specification
Slump (in):	4 1/2	
Air Content (%):	5.5	
Concrete Temp. (F):	86	
Ambient Temp. (F):	82	
Plastic Unit Wt. (pcf):	144.6	
Yield (Cu. Yds.):		

Laboratory Test Data

Set No.	Specimen ID	Avg Diam. (in)	Area (sq in)	Date Received	Specimen Weight (lbs)	Date Tested	Age at Test (days)	Maximum Load (lbs)	Compressive Strength (psi)	Fracture Type
38	A	4.00	12.57	05/02/16	8.50	05/02/16	3	35,030	2,790	2
38	B	4.00	12.57	05/02/16	8.63	05/06/16	7	38,890	3,090	2
38	C	4.00	12.57	05/02/16		05/27/16	28			
38	D			05/02/16			Hold			

Comments: n/a

Samples Made By: Terracon
Services:

Terracon Rep.: Kerry Cobb
Reported To: Don with Willliams Services
Contractor:
Report Distribution:
(1) Taylor Corporation, Emailed
(1) Brown Construction & Development, Emailed

Start/Stop:

Reviewed By: Anthony Cheatwood

Test Methods: ASTM C 31, ASTM C39, ASTM C138, ASTM C143, ASTM C172, ASTM C1064

The tests were performed in general accordance with applicable ASTM, AASHTO, or DOT test methods. This report is exclusively for the use of the client indicated above and shall not be reproduced except in full without the written consent of our company. Test results transmitted herein are only applicable to the actual samples tested at the location(s) referenced and are not necessarily indicative of the properties of other apparently similar or identical materials.

CONCRETE COMPRESSIVE STRENGTH TEST REPORT

Report Number: E1151124.0091A
Service Date: 04/29/16
Report Date: 05/02/16
Task:

Terracon
110 12th St N
Birmingham, AL 35203-1537
205-942-1289

Client

Taylor Corporation
Attn: Ellis Bennett
PO Box 3424
Oxford, AL 36203

Project

Solutia OU-3 Remediation
Clydesdale Avenue
Anniston, AL

Project Number: E1151124

Material Information

Specified Strength: 4,000 psi @ 28 days

Mix ID: RM4020
Supplier: Webb
Batch Time: 1230 **Plant:** 202
Truck No.: 132 **Ticket No.:** 118352

Sample Information

Sample Date: 04/29/16 **Sample Time:** 1300
Sampled By: Kerry Cobb
Weather Conditions: p.cloudy
Accumulative Yards: 6 **Batch Size (cy):** 6
Placement Method: Chute
Water Added Before (gal): 0
Water Added After (gal): 0 **Slump After (in):** n/a
Sample Location: wall section @ area E
Placement Location: same

Field Test Data

Test	Result	Specification
Slump (in):	4 1/2	
Air Content (%):	5.5	
Concrete Temp. (F):	86	
Ambient Temp. (F):	82	
Plastic Unit Wt. (pcf):	144.6	
Yield (Cu. Yds.):		

Laboratory Test Data

Set No.	Specimen ID	Avg Diam. (in)	Area (sq in)	Date Received	Specimen Weight (lbs)	Date Tested	Age at Test (days)	Maximum Load (lbs)	Compressive Strength (psi)	Fracture Type
38	A	4.00	12.57	05/02/16	8.50	05/02/16	3	35,030	2,790	2
38	B	4.00	12.57	05/02/16		05/06/16	7			
38	C	4.00	12.57	05/02/16		05/27/16	28			
38	D			05/02/16			Hold			

Comments: n/a

Samples Made By: Terracon
Services:

Terracon Rep.: Kerry Cobb
Reported To: Don with Willliams Services
Contractor:
Start/Stop:

Report Distribution:
(1) Taylor Corporation, Emailed
(1) Brown Construction & Development, Emailed

Reviewed By: Anthony Cheatwood

Test Methods: ASTM C 31, ASTM C39, ASTM C138, ASTM C143, ASTM C172, ASTM C1064

The tests were performed in general accordance with applicable ASTM, AASHTO, or DOT test methods. This report is exclusively for the use of the client indicat above and shall not be reproduced except in full without the written consent of our company. Test results transmitted herein are only applicable to the actual sam tested at the location(s) referenced and are not necessarily indicative of the properties of other apparently similar or identical materials.

CONCRETE COMPRESSIVE STRENGTH TEST REPORT

Report Number: E1151124.0091A
Service Date: 04/29/16
Report Date: 05/27/16 Revision 2 - 28-day results
Task:

Terracon
110 12th St N
Birmingham, AL 35203-1537
205-942-1289

Client

Taylor Corporation
Attn: Ellis Bennett
PO Box 3424
Oxford, AL 36203

Project

Solutia OU-3 Remediation
Clydesdale Avenue
Anniston, AL

Project Number: E1151124

Material Information

Specified Strength: 4,000 psi @ 28 days

Mix ID: RM4020
Supplier: Webb
Batch Time: 1230 **Plant:** 202
Truck No.: 132 **Ticket No.:** 118352

Sample Information

Sample Date: 04/29/16 **Sample Time:** 1300
Sampled By: Kerry Cobb
Weather Conditions: p.cloudy
Accumulative Yards: 6 **Batch Size (cy):** 6
Placement Method: Chute
Water Added Before (gal): 0
Water Added After (gal): 0 **Slump After (in):** n/a
Sample Location: wall section @ area E
Placement Location: same

Field Test Data

Test	Result	Specification
Slump (in):	4 1/2	
Air Content (%):	5.5	
Concrete Temp. (F):	86	
Ambient Temp. (F):	82	
Plastic Unit Wt. (pcf):	144.6	
Yield (Cu. Yds.):		

Laboratory Test Data

Set No.	Specimen ID	Avg Diam. (in)	Area (sq in)	Date Received	Specimen Weight (lbs)	Date Tested	Age at Test (days)	Maximum Load (lbs)	Compressive Strength (psi)	Fracture Type
38	A	4.00	12.57	05/02/16	8.50	05/02/16	3	35,030	2,790	2
38	B	4.00	12.57	05/02/16	8.63	05/06/16	7	38,890	3,090	2
38	C	4.00	12.57	05/02/16	8.68	05/27/16	28	52,420	4,170	2
38	D			05/02/16			Hold			

Comments: **Compressive strength of 28 day cylinders complies with the specified strength.**
n/a

Samples Made By: Terracon
Services:

Terracon Rep.: Kerry Cobb
Reported To: Don with Willliams Services
Contractor:
Report Distribution:
(1) Taylor Corporation, Emailed
(1) Brown Construction & Development, Emailed

Start/Stop:

Reviewed By: Anthony Cheatwood

Test Methods: ASTM C 31, ASTM C39, ASTM C138, ASTM C143, ASTM C172, ASTM C1064

The tests were performed in general accordance with applicable ASTM, AASHTO, or DOT test methods. This report is exclusively for the use of the client indicat above and shall not be reproduced except in full without the written consent of our company. Test results transmitted herein are only applicable to the actual sam tested at the location(s) referenced and are not necessarily indicative of the properties of other apparently similar or identical materials.

CONCRETE COMPRESSIVE STRENGTH TEST REPORT

Report Number: E1151124.0089A
Service Date: 04/26/16
Report Date: 05/25/16 Revision 3 - 28-day results
Task:

Terracon
110 12th St N
Birmingham, AL 35203-1537
205-942-1289

Client

Taylor Corporation
Attn: Ellis Bennett
PO Box 3424
Oxford, AL 36203

Project

Solutia OU-3 Remediation
Clydesdale Avenue
Anniston, AL

Project Number: E1151124

Material Information

Specified Strength: 4,000 psi @ 28 days

Mix ID: RM6000
Supplier: Webb
Batch Time: 0830 **Plant:** 202
Truck No.: 109 **Ticket No.:** 118183

Sample Information

Sample Date: 04/26/16 **Sample Time:** 0930
Sampled By: Kerry Cobb
Weather Conditions: clear
Accumulative Yards: 3 **Batch Size (cy):** 3
Placement Method: Chute
Water Added Before (gal): 0
Water Added After (gal): 0 **Slump After (in):** n/a
Sample Location: Wall footings @ area E see drawing
Placement Location: same

Field Test Data

Test	Result	Specification
Slump (in):	3	
Air Content (%):	5.0	
Concrete Temp. (F):	82	
Ambient Temp. (F):	72	
Plastic Unit Wt. (pcf):	143.9	
Yield (Cu. Yds.):		

Laboratory Test Data

Set No.	Specimen ID	Avg Diam. (in)	Area (sq in)	Date Received	Specimen Weight (lbs)	Date Tested	Age at Test (days)	Maximum Load (lbs)	Compressive Strength (psi)	Fracture Type
37	A	4.00	12.57	04/27/16	8.77	04/27/16	1	39,440	3,140	2
37	B	4.00	12.57	04/27/16	8.73	04/29/16	3	45,330	3,610	2
37	C	4.00	12.57	04/27/16	8.79	05/03/16	7	52,720	4,200	2
37	D	4.00	12.57	04/27/16	8.73	05/24/16	28	69,140	5,500	3
37	E			04/27/16			Hold			

Comments: **Compressive strength of 28 day cylinders complies with the specified strength.**
n/a

Samples Made By: Terracon
Services:

Terracon Rep.: Kerry Cobb
Reported To: Don with Willliams Services
Contractor:
Report Distribution:
(1) Taylor Corporation, Emailed
(1) Brown Construction & Development, Emailed

Start/Stop:

Reviewed By: Anthony Chealwood

Test Methods: ASTM C 31, ASTM C39, ASTM C138, ASTM C143, ASTM C172, ASTM C1064

The tests were performed in general accordance with applicable ASTM, AASHTO, or DOT test methods. This report is exclusively for the use of the client indicated above and shall not be reproduced except in full without the written consent of our company. Test results transmitted herein are only applicable to the actual samples tested at the location(s) referenced and are not necessarily indicative of the properties of other apparently similar or identical materials.

CONCRETE COMPRESSIVE STRENGTH TEST REPORT

Report Number: E1151124.0089A
Service Date: 04/26/16
Report Date: 04/27/16
Task:

Terracon
110 12th St N
Birmingham, AL 35203-1537
205-942-1289

Client

Taylor Corporation
Attn: Ellis Bennett
PO Box 3424
Oxford, AL 36203

Project

Solutia OU-3 Remediation
Clydesdale Avenue
Anniston, AL

Project Number: E1151124

Material Information

Specified Strength: 6,000 psi @ 28 days

Mix ID: RM6000
Supplier: Webb
Batch Time: 0830 **Plant:** 202
Truck No.: 109 **Ticket No.:** 118183

Sample Information

Sample Date: 04/26/16 **Sample Time:** 0930
Sampled By: Kerry Cobb
Weather Conditions: clear
Accumulative Yards: 3 **Batch Size (cy):** 3
Placement Method: Chute
Water Added Before (gal): 0
Water Added After (gal): 0 **Slump After (in):** n/a
Sample Location: Wall footings @ area E see drawing
Placement Location: same

Field Test Data

Test	Result	Specification
Slump (in):	3	
Air Content (%):	5.0	
Concrete Temp. (F):	82	
Ambient Temp. (F):	72	
Plastic Unit Wt. (pcf):	143.9	
Yield (Cu. Yds.):		

Laboratory Test Data

Set No.	Specimen ID	Avg Diam. (in)	Area (sq in)	Date Received	Specimen Weight (lbs)	Date Tested	Age at Test (days)	Maximum Load (lbs)	Compressive Strength (psi)	Fracture Type
37	A	4.00	12.57	04/26/16	8.77	04/27/16	1	39,440	3,140	2
37	B	4.00	12.57	04/26/16		04/29/16	3			
37	C	4.00	12.57	04/26/16		05/03/16	7			
37	D	4.00	12.57	04/26/16		05/24/16	28			
37	E			04/26/16			Hold			

Comments: n/a

Samples Made By: Terracon
Services:

Terracon Rep.: Kerry Cobb
Reported To: Don with Willliams Services
Contractor:
Report Distribution:
(1) Taylor Corporation, Emailed
(1) Brown Construction & Development, Emailed

Start/Stop:

Reviewed By: Anthony Cheatwood

Test Methods: ASTM C 31, ASTM C39, ASTM C138, ASTM C143, ASTM C172, ASTM C1064

The tests were performed in general accordance with applicable ASTM, AASHTO, or DOT test methods. This report is exclusively for the use of the client indicated above and shall not be reproduced except in full without the written consent of our company. Test results transmitted herein are only applicable to the actual samples tested at the location(s) referenced and are not necessarily indicative of the properties of other apparently similar or identical materials.

CONCRETE COMPRESSIVE STRENGTH TEST REPORT

E1151124.0087A
03/09/16
04/07/16 Revision 2 - 28-day results

Terracon
110 12th St N
Birmingham, AL 35203-1537
205-942-1289

Client

Taylor Corporation
Attn: Ellis Bennett
PO Box 3424
Oxford, AL 36203

Project

Solutia OU-3 Remediation
Clydesdale Avenue
Anniston, AL

Project Number: E1151124

Material Information

4,000 psi @ 28 days

RM4000
Webb
1030 202
7 116669

Sample Information

03/09/16 1100
Kerry Cobb
clear

Accumulative Yards: 9 9
Chute
0
0 4
slab @ upper valve vault area A
same

Field Test Data

Slump (in):	4	
	6.0	
	70	
	67	
	143.5	

Laboratory Test Data

		(in)			(lbs)			(lbs)	(psi)	
36	A	4.00	12.57	03/10/16	8.64	03/14/16	5	39,430	3,140	2
36	B	4.00	12.57	03/10/16	8.64	03/16/16	7	45,790	3,640	3
36	C	4.00	12.57	03/10/16		04/06/16	28	54,500	4,340	3
36	D			03/10/16			Hold			

Compressive strength of 28 day cylinders complies with the specified strength.
n/a

Samples Made By: Terracon

Terracon Rep.: Kerry Cobb
Josh with Taylor Corporation

(1) Taylor Corporation, Emailed

(1) Brown Construction & Development, Emailed

Reviewed By: Anthony Cheatwood

ASTM C 31, ASTM C39, ASTM C138, ASTM C143, ASTM C172, ASTM C1064

The tests were performed in general accordance with applicable ASTM, AASHTO, or DOT test methods. This report is exclusively for the use of the client indicated above and shall not be reproduced except in full without the written consent of our company. Test results transmitted herein are only applicable to the actual samples tested at the location(s) referenced and are not necessarily indicative of the properties of other apparently similar or identical materials.

CONCRETE COMPRESSIVE STRENGTH TEST REPORT

Report Number: E1151124.0087A
Service Date: 03/09/16
Report Date: 03/17/16 Revision 1 - 7-day results
Task:

Terracon
110 12th St N
Birmingham, AL 35203-1537
205-942-1289

Client

Taylor Corporation
Attn: Ellis Bennett
PO Box 3424
Oxford, AL 36203

Project

Solutia OU-3 Remediation
Clydesdale Avenue
Anniston, AL

Project Number: E1151124

Material Information

Specified Strength: 4,000 psi @ 28 days

Mix ID: RM4000
Supplier: Webb
Batch Time: 1030 **Plant:** 202
Truck No.: 7 **Ticket No.:** 116669

Sample Information

Sample Date: 03/09/16 **Sample Time:** 1100
Sampled By: Kerry Cobb
Weather Conditions: clear
Accumulative Yards: 9 **Batch Size (cy):** 9
Placement Method: Chute
Water Added Before (gal): 0
Water Added After (gal): 0 **Slump After (in):** 4
Sample Location: slab @ upper valve vault area A
Placement Location: same

Field Test Data

Test	Result	Specification
Slump (in):	4	
Air Content (%):	6.0	
Concrete Temp. (F):	70	
Ambient Temp. (F):	67	
Plastic Unit Wt. (pcf):	143.5	
Yield (Cu. Yds.):		

Laboratory Test Data

Set No.	Specimen ID	Avg Diam. (in)	Area (sq in)	Date Received	Specimen Weight (lbs)	Date Tested	Age at Test (days)	Maximum Load (lbs)	Compressive Strength (psi)	Fracture Type
36	A	4.00	12.57	03/10/16	8.64	03/14/16	5	39,430	3,140	2
36	B	4.00	12.57	03/10/16	8.64	03/16/16	7	45,790	3,640	3
36	C	4.00	12.57	03/10/16		04/06/16	28			
36	D			03/10/16			Hold			

Comments: n/a

Samples Made By: Terracon
Services:

Terracon Rep.: Kerry Cobb
Reported To: Josh with Taylor Corporation
Contractor:
Report Distribution:
(1) Taylor Corporation, Emailed
(1) Brown Construction & Development, Emailed

Start/Stop:

Reviewed By: Anthony Cheatwood

Test Methods: ASTM C 31, ASTM C39, ASTM C138, ASTM C143, ASTM C172, ASTM C1064

The tests were performed in general accordance with applicable ASTM, AASHTO, or DOT test methods. This report is exclusively for the use of the client indicated above and shall not be reproduced except in full without the written consent of our company. Test results transmitted herein are only applicable to the actual samples tested at the location(s) referenced and are not necessarily indicative of the properties of other apparently similar or identical materials.

CONCRETE COMPRESSIVE STRENGTH TEST REPORT

Report Number: E1151124.0087A
Service Date: 03/09/16
Report Date: 03/15/16
Task:

Terracon
110 12th St N
Birmingham, AL 35203-1537
205-942-1289

Client

Taylor Corporation
Attn: Ellis Bennett
PO Box 3424
Oxford, AL 36203

Project

Solutia OU-3 Remediation
Clydesdale Avenue
Anniston, AL

Project Number: E1151124

Material Information

Specified Strength: 4,000 psi @ 28 days

Mix ID: RM4000
Supplier: Webb
Batch Time: 1030 **Plant:** 202
Truck No.: 7 **Ticket No.:** 116669

Sample Information

Sample Date: 03/09/16 **Sample Time:** 1100
Sampled By: Kerry Cobb
Weather Conditions: clear
Accumulative Yards: 9 **Batch Size (cy):** 9
Placement Method: Chute
Water Added Before (gal): 0
Water Added After (gal): 0 **Slump After (in):** 4
Sample Location: slab @ upper valve vault area A
Placement Location: same

Field Test Data

Test	Result	Specification
Slump (in):	4	
Air Content (%):	6.0	
Concrete Temp. (F):	70	
Ambient Temp. (F):	67	
Plastic Unit Wt. (pcf):	143.5	
Yield (Cu. Yds.):		

Laboratory Test Data

Set No.	Specimen ID	Avg Diam. (in)	Area (sq in)	Date Received	Specimen Weight (lbs)	Date Tested	Age at Test (days)	Maximum Load (lbs)	Compressive Strength (psi)	Fracture Type
36	A	4.00	12.57	03/10/16	8.64	03/14/16	5	39,430	3,140	2
36	B	4.00	12.57	03/10/16		03/16/16	7			
36	C	4.00	12.57	03/10/16		04/06/16	28			
36	D			03/10/16			Hold			

Comments: n/a

Samples Made By: Terracon
Services:

Terracon Rep.: Kerry Cobb
Reported To: Josh with Taylor Corporation
Contractor:
Report Distribution:
(1) Taylor Corporation, Emailed
(1) Brown Construction & Development, Emailed

Start/Stop:

Reviewed By: Anthony Cheatwood

Test Methods: ASTM C 31, ASTM C39, ASTM C138, ASTM C143, ASTM C172, ASTM C1064

The tests were performed in general accordance with applicable ASTM, AASHTO, or DOT test methods. This report is exclusively for the use of the client indicated above and shall not be reproduced except in full without the written consent of our company. Test results transmitted herein are only applicable to the actual samples tested at the location(s) referenced and are not necessarily indicative of the properties of other apparently similar or identical materials.

CONCRETE OBSERVATION REPORT

Report Number: E1151124.0087
Service Date: 03/09/16
Report Date: 03/10/16

Terracon
110 12th St N
Birmingham, AL 35203-1537
205-942-1289

Client

Taylor Corporation
Attn: Ellis Bennett
PO Box 3424
Oxford, AL 36203

Project

Solutia OU-3 Remediation
Clydesdale Avenue
Anniston, AL

Project Number: E1151124

Services Requested By:	Robby with Brown Construction
Concrete Contractor:	Brown Construction
Concrete Placement:	Slab-on-grade
Observation Location(s):	Slab @ uuper valve vault area A see drawing
Concrete Type:	4000-psi, air-entrained concrete supplied by Webb (Mix ID: RM4000)
Method of Placement:	Chute
Method of Consolidation:	Vibratory screed
Tests Performed:	Concrete slump, air, temperature and unit weight measurements were performed and the results were in accordance with project specifications.
Test Specimens Fabricated:	A total of 4 compressive strength specimens [Set No.: 36] were fabricated during today's concrete activities.
Summary:	Based on our observations, cast-in-place concrete construction activities at the above-referenced locations appeared to be completed in general accordance with the project plans and specifications.

Services:

Terracon Rep.: Kerry Cobb
Reported To: Josh with Taylor Corporation
Contractor:
Report Distribution:
(1) Taylor Corporation, Emailed
(1) Brown Construction & Development, Emailed

Started
Finished:

Reviewed By: Anthony Cheatwood

The tests were performed in general accordance with applicable ASTM, AASHTO, or DOT test methods. This report is exclusively for the use of the client indicated above and shall not be reproduced except in full without the written consent of our company. Test results transmitted herein are only applicable to the actual samples tested at the location(s) referenced and are not necessarily indicative of the properties of other apparently similar or identical materials.

CONCRETE COMPRESSIVE STRENGTH TEST REPORT

Report Number: E1151124.0086A
Service Date: 03/08/16
Report Date: 04/07/16 Revision 2 - 28-day results
Task:

Terracon
110 12th St N
Birmingham, AL 35203-1537
205-942-1289

Client

Taylor Corporation
Attn: Ellis Bennett
PO Box 3424
Oxford, AL 36203

Project

Solutia OU-3 Remediation
Clydesdale Avenue
Anniston, AL

Project Number: E1151124

Material Information

Specified Strength: 4,000 psi @ 28 days

Mix ID: RM4000
Supplier: Webb
Batch Time: 1000 **Plant:** 202
Truck No.: 7 **Ticket No.:** 116613

Sample Information

Sample Date: 03/08/16 **Sample Time:** 1100
Sampled By: Kerry Cobb
Weather Conditions: p.cloudy
Accumulative Yards: 9 **Batch Size (cy):** 9
Placement Method: Direct Discharge
Water Added Before (gal): 0
Water Added After (gal): 0 **Slump After (in):** 5
Sample Location: slab @ upper valve vault area A
Placement Location: same

Field Test Data

Test	Result	Specification
Slump (in):	5	
Air Content (%):	6.0	
Concrete Temp. (F):	72	
Ambient Temp. (F):	68	
Plastic Unit Wt. (pcf):	144.1	
Yield (Cu. Yds.):		

Laboratory Test Data

Set No.	Specimen ID	Avg Diam. (in)	Area (sq in)	Date Received	Specimen Weight (lbs)	Date Tested	Age at Test (days)	Maximum Load (lbs)	Compressive Strength (psi)	Fracture Type
35	A	4.00	12.57	03/08/16	8.50	03/11/16	3	32,650	2,600	3
35	B	4.00	12.57	03/08/16	8.55	03/15/16	7	37,160	2,960	2
35	C	4.00	12.57	03/08/16	8.66	04/05/16	28	57,120	4,550	2
35	D			03/08/16			Hold			

Comments: **Compressive strength of 28 day cylinders complies with the specified strength.**
n/a

Samples Made By: Terracon
Services:

Terracon Rep.: Kerry Cobb
Reported To: Josh with Taylor Corporation
Contractor:
Report Distribution:
(1) Taylor Corporation, Emailed
(1) Brown Construction & Development, Emailed

Start/Stop:

Reviewed By: Anthony Cheatwood

Test Methods: ASTM C 31, ASTM C39, ASTM C138, ASTM C143, ASTM C172, ASTM C1064

The tests were performed in general accordance with applicable ASTM, AASHTO, or DOT test methods. This report is exclusively for the use of the client indicated above and shall not be reproduced except in full without the written consent of our company. Test results transmitted herein are only applicable to the actual samples tested at the location(s) referenced and are not necessarily indicative of the properties of other apparently similar or identical materials.

CONCRETE COMPRESSIVE STRENGTH TEST REPORT

Report Number: E1151124.0086A
Service Date: 03/08/16
Report Date: 03/16/16 Revision 1 - 7-day results
Task:

Terracon
110 12th St N
Birmingham, AL 35203-1537
205-942-1289

Client

Taylor Corporation
Attn: Ellis Bennett
PO Box 3424
Oxford, AL 36203

Project

Solutia OU-3 Remediation
Clydesdale Avenue
Anniston, AL

Project Number: E1151124

Material Information

Specified Strength: 4,000 psi @ 28 days

Mix ID: RM4000
Supplier: Webb
Batch Time: 1000 **Plant:** 202
Truck No.: 7 **Ticket No.:** 116613

Sample Information

Sample Date: 03/08/16 **Sample Time:** 1100
Sampled By: Kerry Cobb
Weather Conditions: p.cloudy
Accumulative Yards: 9 **Batch Size (cy):** 9
Placement Method: Direct Discharge
Water Added Before (gal): 0
Water Added After (gal): 0 **Slump After (in):** 5
Sample Location: slab @ upper valve vault area A
Placement Location: same

Field Test Data

Test	Result	Specification
Slump (in):	5	
Air Content (%):	6.0	
Concrete Temp. (F):	72	
Ambient Temp. (F):	68	
Plastic Unit Wt. (pcf):	144.1	
Yield (Cu. Yds.):		

Laboratory Test Data

Set No.	Specimen ID	Avg Diam. (in)	Area (sq in)	Date Received	Specimen Weight (lbs)	Date Tested	Age at Test (days)	Maximum Load (lbs)	Compressive Strength (psi)	Fracture Type
35	A	4.00	12.57	03/08/16	8.50	03/11/16	3	32,650	2,600	3
35	B	4.00	12.57	03/08/16	8.55	03/15/16	7	37,160	2,960	2
35	C	4.00	12.57	03/08/16		04/05/16	28			
35	D			03/08/16			Hold			

Comments: n/a

Samples Made By: Terracon
Services:

Terracon Rep.: Kerry Cobb
Reported To: Josh with Taylor Corporation
Contractor:
Report Distribution:
(1) Taylor Corporation, Emailed
(1) Brown Construction & Development, Emailed

Start/Stop:

Reviewed By: Anthony Cheatwood

Test Methods: ASTM C 31, ASTM C39, ASTM C138, ASTM C143, ASTM C172, ASTM C1064

The tests were performed in general accordance with applicable ASTM, AASHTO, or DOT test methods. This report is exclusively for the use of the client indicated above and shall not be reproduced except in full without the written consent of our company. Test results transmitted herein are only applicable to the actual samples tested at the location(s) referenced and are not necessarily indicative of the properties of other apparently similar or identical materials.

CONCRETE COMPRESSIVE STRENGTH TEST REPORT

Report Number: E1151124.0086A
Service Date: 03/08/16
Report Date: 03/14/16
Task:

Terracon
110 12th St N
Birmingham, AL 35203-1537
205-942-1289

Client

Taylor Corporation
Attn: Ellis Bennett
PO Box 3424
Oxford, AL 36203

Project

Solutia OU-3 Remediation
Clydesdale Avenue
Anniston, AL

Project Number: E1151124

Material Information

Specified Strength: 4,000 psi @ 28 days

Mix ID: RM4000
Supplier: Webb
Batch Time: 1000 **Plant:** 202
Truck No.: 7 **Ticket No.:** 116613

Sample Information

Sample Date: 03/08/16 **Sample Time:** 1100
Sampled By: Kerry Cobb
Weather Conditions: p.cloudy
Accumulative Yards: 9 **Batch Size (cy):** 9
Placement Method: Direct Discharge
Water Added Before (gal): 0
Water Added After (gal): 0 **Slump After (in):** 5
Sample Location: slab @ upper valve vault area A
Placement Location: same

Field Test Data

Test	Result	Specification
Slump (in):	5	
Air Content (%):	6.0	
Concrete Temp. (F):	72	
Ambient Temp. (F):	68	
Plastic Unit Wt. (pcf):	144.1	
Yield (Cu. Yds.):		

Laboratory Test Data

Set No.	Specimen ID	Avg Diam. (in)	Area (sq in)	Date Received	Specimen Weight (lbs)	Date Tested	Age at Test (days)	Maximum Load (lbs)	Compressive Strength (psi)	Fracture Type
35	A	4.00	12.57	03/08/16	8.50	03/11/16	3	32,650	2,600	3
35	B	4.00	12.57	03/08/16		03/15/16	7			
35	C	4.00	12.57	03/08/16		04/05/16	28			
35	D			03/08/16			Hold			

Comments: n/a

Samples Made By: Terracon
Services:

Terracon Rep.: Kerry Cobb
Reported To: Josh with Taylor Corporation
Contractor:
Report Distribution:
(1) Taylor Corporation, Emailed
(1) Brown Construction & Development, Emailed

Start/Stop:

Reviewed By: Anthony Cheatwood

Test Methods: ASTM C 31, ASTM C39, ASTM C138, ASTM C143, ASTM C172, ASTM C1064

The tests were performed in general accordance with applicable ASTM, AASHTO, or DOT test methods. This report is exclusively for the use of the client indicated above and shall not be reproduced except in full without the written consent of our company. Test results transmitted herein are only applicable to the actual samples tested at the location(s) referenced and are not necessarily indicative of the properties of other apparently similar or identical materials.

CONCRETE COMPRESSIVE STRENGTH TEST REPORT

Report Number: E1151124.0089A
Service Date: 04/26/16
Report Date: 04/27/16
Task:

Terracon
110 12th St N
Birmingham, AL 35203-1537
205-942-1289

Client

Taylor Corporation
Attn: Ellis Bennett
PO Box 3424
Oxford, AL 36203

Project

Solutia OU-3 Remediation
Clydesdale Avenue
Anniston, AL

Project Number: E1151124

Material Information

Specified Strength: 6,000 psi @ 28 days

Mix ID: RM6000
Supplier: Webb
Batch Time: 0830 **Plant:** 202
Truck No.: 109 **Ticket No.:** 118183

Sample Information

Sample Date: 04/26/16 **Sample Time:** 0930
Sampled By: Kerry Cobb
Weather Conditions: clear
Accumulative Yards: 3 **Batch Size (cy):** 3
Placement Method: Chute
Water Added Before (gal): 0
Water Added After (gal): 0 **Slump After (in):** n/a
Sample Location: Wall footings @ area E see drawing
Placement Location: same

Field Test Data

Test	Result	Specification
Slump (in):	3	
Air Content (%):	5.0	
Concrete Temp. (F):	82	
Ambient Temp. (F):	72	
Plastic Unit Wt. (pcf):	143.9	
Yield (Cu. Yds.):		

Laboratory Test Data

Set No.	Specimen ID	Avg Diam. (in)	Area (sq in)	Date Received	Specimen Weight (lbs)	Date Tested	Age at Test (days)	Maximum Load (lbs)	Compressive Strength (psi)	Fracture Type
37	A	4.00	12.57	04/26/16	8.77	04/27/16	1	39,440	3,140	2
37	B	4.00	12.57	04/26/16		04/29/16	3			
37	C	4.00	12.57	04/26/16		05/03/16	7			
37	D	4.00	12.57	04/26/16		05/24/16	28			
37	E			04/26/16			Hold			

Comments: n/a

Samples Made By: Terracon
Services:

Terracon Rep.: Kerry Cobb
Reported To: Don with Willliams Services
Contractor:
Report Distribution:
(1) Taylor Corporation, Emailed
(1) Brown Construction & Development, Emailed

Start/Stop:

Reviewed By: Anthony Cheatwood

Test Methods: ASTM C 31, ASTM C39, ASTM C138, ASTM C143, ASTM C172, ASTM C1064

The tests were performed in general accordance with applicable ASTM, AASHTO, or DOT test methods. This report is exclusively for the use of the client indicated above and shall not be reproduced except in full without the written consent of our company. Test results transmitted herein are only applicable to the actual samples tested at the location(s) referenced and are not necessarily indicative of the properties of other apparently similar or identical materials.

E115/124.0087
Concrete placement
Locations 3-9-16
Poured 3-9-16

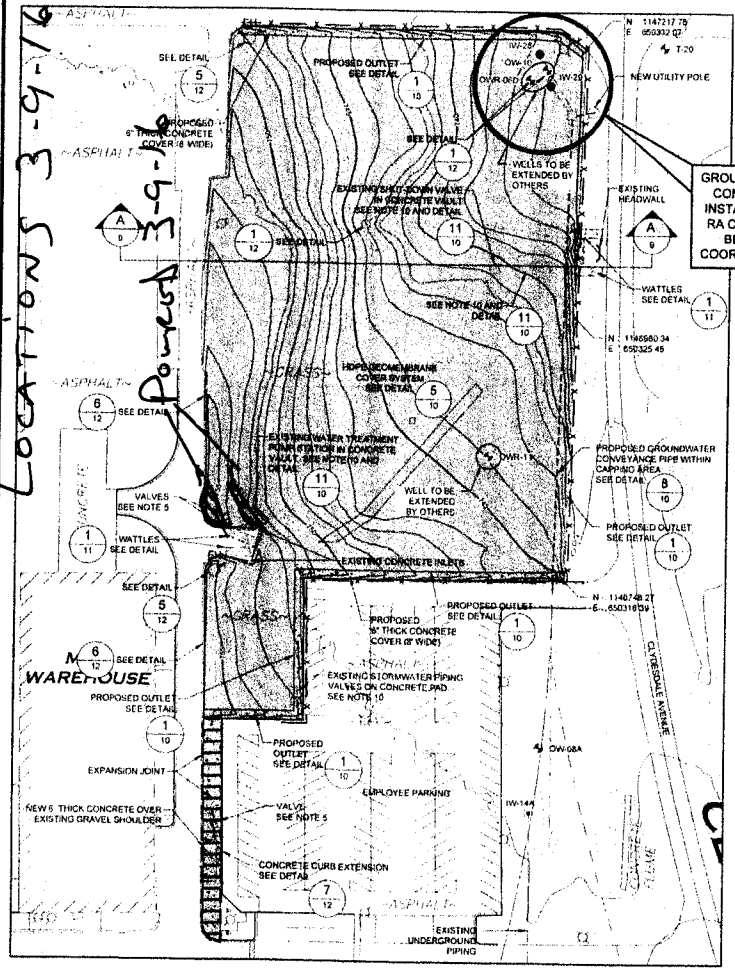

AREA A
PROPOSED FINAL CONDITIONS /
EROSION AND SEDIMENT CONTROL PLAN

SCALE 0 50 100 150 FEET

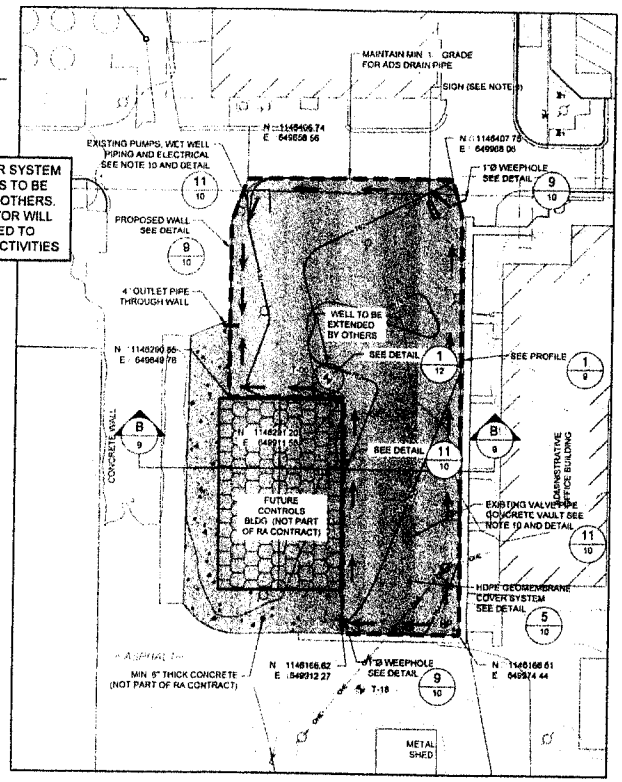

AREA E
PROPOSED FINAL CONDITIONS /
EROSION AND SEDIMENT CONTROL PLAN

SCALE 0 30 60 90 FEET

LEGEND

- LIMITS OF PROPOSED COVER SYSTEMS (SEE NOTE 6)
- EXISTING CONTOURS (2 FT. INTERVAL)
- EXISTING UNDERGROUND PIPING
- CURB
- RAILROAD
- WALL
- EXISTING MONITORING WELL (SEE NOTES 2 AND 5)
- EXISTING INTERCEPTOR WELL (SEE NOTE 2)
- PROPOSED INTERCEPTOR WELL
- LIGHT AND POWER POLES (SEE NOTE 2)
- FH FIRE HYDRANT (SEE NOTE 5)
- SEDIMENT BARRIER (TYPE A SILT FENCE WITH STEEL POST) (SEE NOTE 3)
- WATTLE (SEE NOTE 3)
- FLOW DIRECTION
- HP HIGH POINT
- 761.0 PROPOSED CONTOURS (1 FT. INTERVALS)
- PROPOSED CONCRETE RETAINING WALL
- PROPOSED UNDERGROUND GROUNDWATER CONVEYANCE PIPE WITHIN LIMITS OF CAPPING
- PROPOSED UNDERGROUND GROUNDWATER CONVEYANCE PIPE
- CONCRETE CAP
- EJ EXPANSION JOINT, SEE DETAIL 10/11
- ABOVE-GROUND WATER VALVE

NOTES

1. EXISTING STRUCTURES AND UTILITIES WILL REMAIN IN PLACE UNLESS SPECIFICALLY INDICATED OTHERWISE
2. SEE SHEETS 10, 11 AND 12 FOR TYPICAL CONNECTION DETAILS
3. SEE SHEET 11 FOR EROSION AND SEDIMENT CONTROL DETAILS
4. GRADES SHOWN REPRESENT APPROXIMATE TOP OF THE FINAL COVER SYSTEM. THE FINAL COVER ELEVATIONS WILL DEPEND ON THE THICKNESS OF THE SUBGRADE PREPARATION MATERIAL PLACED UNDER THE GEOMEMBRANE TO MEET THE REQUIREMENTS OF THE TECHNICAL SPECIFICATIONS AND TO PROVIDE POSITIVE DRAINAGE AS SHOWN. THE THICKNESS OF THE COVER SYSTEM WILL BE 18" ABOVE THE COVER GEOSYNTHETICS.
5. GROUNDWATER MONITORING WELLS, FIRE HYDRANTS, AND VALVES WILL BE EXTENDED AND WILL REMAIN IN PLACE.
6. LIMIT OF LINED AREA IS DEFINED BY EXISTING EDGE OF GRASS (AREAS A AND E), GRAVEL SHOULDER OR EXISTING FENCE (AREA A).
7. AREA A GEOMEMBRANE LINED AREA IS 168,300 SQ FT, AND THE CONCRETE CAPPED AREA IS 9,321 SQ. FT. AREA E GEOMEMBRANE LINED AREA EXCLUDING FUTURE CONTROLS BUILDING IS 21,532 S.F.
8. NEW AND EXISTING FENCE AROUND AREA A IS NOT SHOWN IN THIS DRAWING FOR CLARITY. REFER TO SHEET 13 FOR NEW FENCE LOCATION.
9. CONTRACTOR WILL COORDINATE WITH OWNER TO REMOVE SIGN, EXTEND ITS FOUNDATION TO ELEVATION 763 FT. MSL (MIN.) AND REINSTALL SIGN.
10. FOR VAULT AREAS WHICH REQUIRE RAISES, THE OWNER WILL SELECT THE VAULT COVER TYPE AS NEEDED FOR ACCESS AND SAFETY REQUIREMENTS.

REFERENCES

1. TOPOGRAPHY FROM CALHOUN COUNTY (2012) AND LOWERY & ASSOCIATES LAND SURVEYING, LLC DATED APRIL 17, 2013
2. "ALTA / ACSM LAND TITLE SURVEY OF OPERABLE UNIT 3 OF THE ANNISTON PCB SITE, PREPARED FOR SOLUTIA INC." BY LOWERY & ASSOCIATES LAND SURVEYING, LLC DATED APRIL 17, 2013
3. THE IDENTIFICATION OF THE PURPOSE / TYPE / SIZE OF THE UNDERGROUND UTILITIES SHOWN WAS OBTAINED FROM THE DRAWING ENTITLED "STUMP.dwg" PROVIDED BY MR. TOM COLLINS OF SOLUTIA INC.

ALABAMA LICENSED PROFESSIONAL ENGINEER No. 34735 JOHN MOELLER
1-28-2015

REV	DATE	REVISION DESCRIPTION	DES	CADD	CHK	APVR
1	2013/09/29	100 DESIGN	SJM	RJC	DTC	SJM
2	2014/09/03	90 DESIGN	CMM	RJC	CMM	SJM
3	2014/09/04	90 DESIGN	CMM	RJC	CMM	SJM

PROJECT
PHARMACIA LLC / SOLUTIA INC.
OPERABLE UNIT 3 REMEDIAL DESIGN
ANNISTON PCB SITE, ALABAMA

TITLE
AREA A AND AREA E
PROPOSED FINAL CONDITIONS /
EROSION AND SEDIMENT CONTROL PLAN

Golder Associates | Solutia.

PROJECT No. 1302982RDA 20.1 | SCALE AS SHOWN | SHEET 06

CONCRETE COMPRESSIVE STRENGTH TEST REPORT

Report Number: E1151124.0084A
Service Date: 03/02/16
Report Date: 03/31/16 Revision 2 - 28-day results
Task:

Terracon
110 12th St N
Birmingham, AL 35203-1537
205-942-1289

Client

Taylor Corporation
Attn: Ellis Bennett
PO Box 3424
Oxford, AL 36203

Project

Solutia OU-3 Remediation
Clydesdale Avenue
Anniston, AL

Project Number: E1151124

Material Information

Specified Strength: 4,000 psi @ 28 days

Mix ID:
Supplier:
Batch Time: 0730 **Plant:**
Truck No.: 133 **Ticket No.:** 116461

Sample Information

Sample Date: 03/02/16 **Sample Time:** 0800
Sampled By: Kerry Cobb
Weather Conditions: clear
Accumulative Yards: 3 **Batch Size (cy):** 3
Placement Method: Chute
Water Added Before (gal): 0
Water Added After (gal): 0 **Slump After (in):** 5
Sample Location: upper valve vault walls see drawing
Placement Location: same

Field Test Data

Test	Result	Specification
Slump (in):	5	
Air Content (%):	5.5	
Concrete Temp. (F):	60	
Ambient Temp. (F):	45	
Plastic Unit Wt. (pcf):	144.8	
Yield (Cu. Yds.):		

Laboratory Test Data

Set No.	Specimen ID	Avg Diam. (in)	Area (sq in)	Date Received	Specimen Weight (lbs)	Date Tested	Age at Test (days)	Maximum Load (lbs)	Compressive Strength (psi)	Fracture Type
34	A	4.00	12.57	03/03/16	8.68	03/05/16	3	44,010	3,500	2
34	B	4.00	12.57	03/03/16	8.53	03/09/16	7	49,560	3,940	2
34	C	4.00	12.57	03/03/16	8.74	03/30/16	28	63,810	5,080	3
34	D			03/03/16			Hold			

Comments: **Compressive strength of 28 day cylinders complies with the specified strength.**
n/a

Samples Made By: Terracon
Services:

Terracon Rep.: Kerry Cobb
Reported To: Josh with Taylor Corporation
Contractor:
Report Distribution:
(1) Taylor Corporation, Emailed
(1) Brown Construction & Development, Emailed

Start/Stop:

Reviewed By: Anthony Chealwood

Test Methods: ASTM C 31, ASTM C39, ASTM C138, ASTM C143, ASTM C172, ASTM C1064

The tests were performed in general accordance with applicable ASTM, AASHTO, or DOT test methods. This report is exclusively for the use of the client indicated above and shall not be reproduced except in full without the written consent of our company. Test results transmitted herein are only applicable to the actual samples tested at the location(s) referenced and are not necessarily indicative of the properties of other apparently similar or identical materials.

APPENDIX R3

Area H



LEGEND

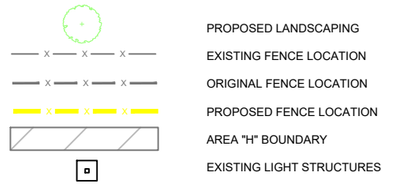

Ticket 119122
5/25/16 (4.5 yds)

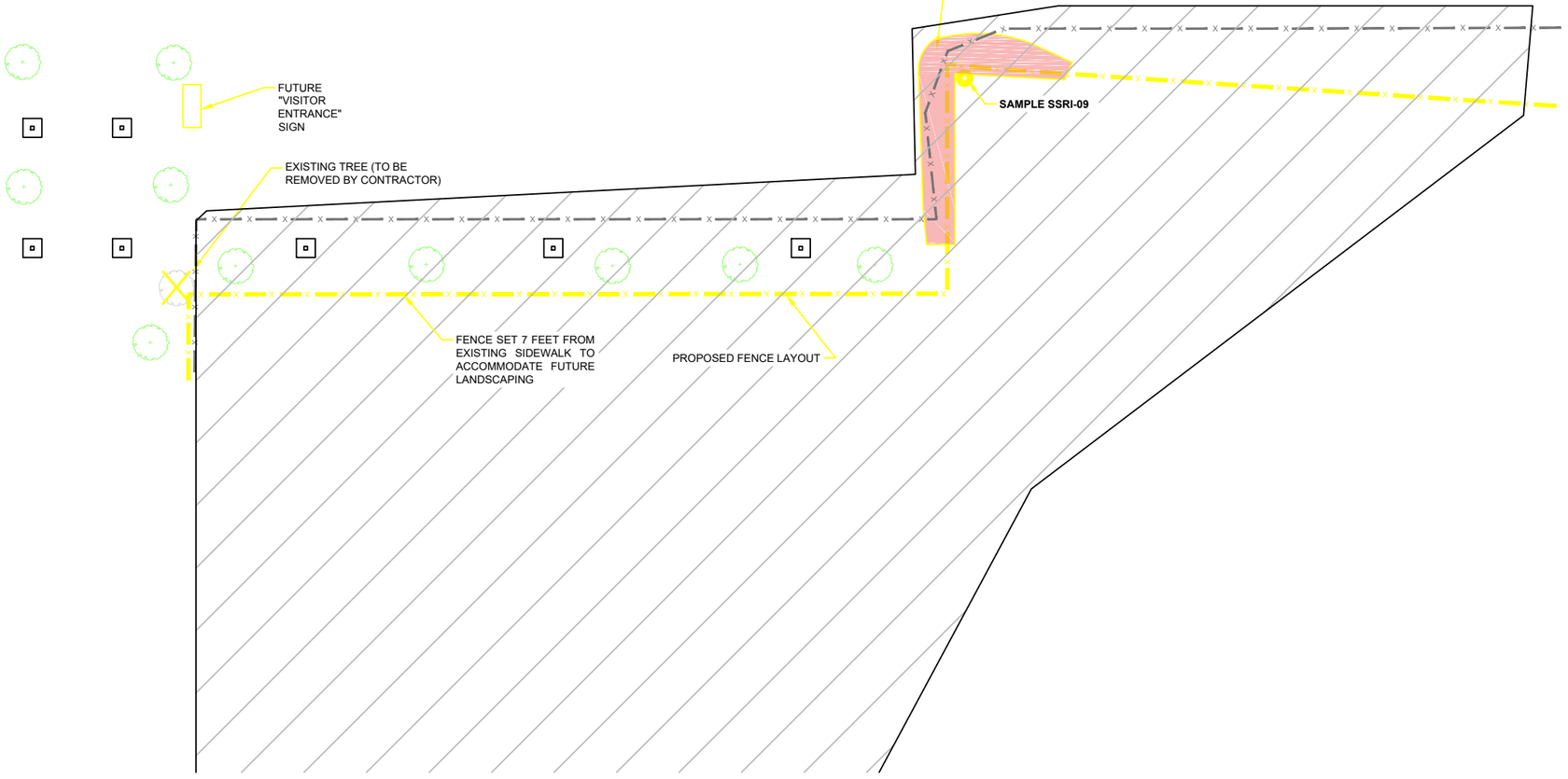

NOTES

1. NEW FENCE SHOULD BE OFFSET 7 FEET FROM EXISTING SIDEWALK AS SHOWN ON DRAWING.

2. EXCAVATE 6-INCHES AND POUR CONCRETE COVER FLUSH WITH THE TOP OF THE EXISTING CURB. POUR CONCRETE DIRECTLY ONTO EXCAVATED SUBGRADE.

3. NEW CONCRETE COVER SHOULD BE CONSTRUCTED USING SAME TECHNIQUE AS AREA A SLAB (4000 PSI CONCRETE WITH #4 REBAR 12" O.C.)



REV	DATE	REVISION DESCRIPTION	DES	CADD	CHK	RVW

PROJECT

PHARMACIA LLC / SOLUTIA INC.
OPERABLE UNIT 3 REMEDIAL DESIGN
ANNISTON PCB SITE, ALABAMA

TITLE

PROPOSED NEW FENCE ALIGNMENT (AREA H)

Golder Associates

FILE No. Area H Concrete Tracking
SCALE AS SHOWN
SHEET 1

CONCRETE COMPRESSIVE STRENGTH TEST REPORT

Report Number: E1151124.0094
Service Date: 05/25/16
Report Date: 06/01/16 Revision 1 - 7-day results
Task:

Terracon
110 12th St N
Birmingham, AL 35203-1537
205-942-1289

Client

Taylor Corporation
Attn: Ellis Bennett
PO Box 3424
Oxford, AL 36203

Project

Solutia OU-3 Remediation
Clydesdale Avenue
Anniston, AL

Project Number: E1151124

Material Information

Specified Strength: 4,000 psi @ 28 days

Mix ID: RM 4000
Supplier: Webb
Batch Time: 0730 **Plant:** 202
Truck No.: 66 **Ticket No.:** 119122

Sample Information

Sample Date: 05/25/16 **Sample Time:** 0830
Sampled By: Kerry Cobb
Weather Conditions: clear
Accumulative Yards: 9 **Batch Size (cy):** 9
Placement Method: Chute
Water Added Before (gal): 0
Water Added After (gal): 0 **Slump After (in):** n/a
Sample Location: Sidewalk @ visitors parking area see drawing
Placement Location: same

Field Test Data

Test	Result	Specification
Slump (in):	4	
Air Content (%):	5.5	
Concrete Temp. (F):	82	
Ambient Temp. (F):	72	
Plastic Unit Wt. (pcf):	145.6	
Yield (Cu. Yds.):		

Laboratory Test Data

Set No.	Specimen ID	Avg Diam. (in)	Area (sq in)	Date Received	Specimen Weight (lbs)	Date Tested	Age at Test (days)	Maximum Load (lbs)	Compressive Strength (psi)	Fracture Type
39	A	4.00	12.57	05/26/16	8.59	05/27/16	2	34,040	2,710	5
39	B	4.00	12.57	05/26/16	8.68	06/01/16	7	42,900	3,410	2
39	C	4.00	12.57	05/26/16		06/22/16	28			
39	D			05/26/16			Hold			

Comments: n/a

Services:

Terracon Rep.: Kerry Cobb
Reported To: Josh with Taylor Corporation
Contractor:
Report Distribution:
(1) Taylor Corporation, Emailed
(1) Brown Construction & Development, Emailed

Start/Stop:

Reviewed By: Anthony Cheatwood

Test Methods: ASTM C 31, ASTM C39, ASTM C138, ASTM C143, ASTM C172, ASTM C1064

The tests were performed in general accordance with applicable ASTM, AASHTO, or DOT test methods. This report is exclusively for the use of the client indicat above and shall not be reproduced except in full without the written consent of our company. Test results transmitted herein are only applicable to the actual sam tested at the location(s) referenced and are not necessarily indicative of the properties of other apparently similar or identical materials.

APPENDIX S

WELL INSTALLATION LOGS AND CONTROL DETAILS

RECORD OF BOREHOLE IW-26

SHEET 1 of 1

PROJECT: Solutia
PROJECT NUMBER: 130-2962
DRILLED DEPTH: 35.0 ft
LOCATION: Anniston, AL

DRILL METHOD: Sonic
DRILL RIG: Sonic
DATE STARTED: 8/13/15
DATE COMPLETED: 8/13/15

not surveyed
GS ELEVATION:
TOC ELEVATION:

DEPTH W.L.:13.70
DATE W.L.:08/14/2015
TIME W.L.:08:18
WEATHER:Sunny
TEMPERATURE:80 F

DEPTH (ft)	ELEVATION (ft)	SOIL PROFILE: DESCRIPTION	USCS	GRAPHIC LOG	ELEV. DEPTH (ft)	MONITORING WELL DIAGRAM and NOTES	NOTES	WELL CONSTRUCTION DETAILS
0		0.0 - 4.0 FILL					Final Turbidity = > 1000 NTU; 33 – Gallons @ ~0.7 gpm	**WELL CASING** Interval: 0-9.75' Material: PVC Diameter: 4" Joint Type: Threaded
						Portland Cement (Type II)		**SURFACE CASING** Interval: N/A Material: N/A Diameter: N/A
5		4.0 - 15.0 CLAY/SILT, some to trace sand and gravel (up to 3 cm diameter gravel)			4.0	Bentonite Chips		**WELL SCREEN** Interval: 9.75-34.75' Material: PVC Diameter: 4" Slot Size: 0.006" End Cap: PVC
10								**FILTER PACK** Interval: 8.25-35' Type: 20/40 Filter Sand
								FILTER PACK SEAL Interval: 5-8.25' Type: Bentonite Chips
15		15.0 - 35.0 CLAY/SILT, very stiff, trace medium to coarse sand, trace gravel (up to 1 cm), decreasing silt with depth			15.0			**ANNULUS SEAL** Interval: 1.5-5' Type: Portland Cement
								WELL COMPLETION Pad: None Protective Casing: None
20						20/40 Filter Sand 0.006" Slot Size		**DRILLING METHODS** Soil Drill: Sonic Rock Drill: N/A
25								
30								
35		Boring completed at 35.0 ft						
40								
45								

LOG SCALE: 1 in = 5.5 ft
DRILLING COMPANY: Cascade
DRILLER: Vernon Scott

GA INSPECTOR: R. Poff
CHECKED BY: M. Hampton
DATE: 8/26/15

Golder Associates

BOREHOLE RECORD SOLUTIA GINT REVISED.GPJ PIEDMONT.GDT 8/31/15

RECORD OF BOREHOLE IW-27

SHEET 1 of 1

PROJECT: Solutia
PROJECT NUMBER: 130-2962
DRILLED DEPTH: 35.3 ft
LOCATION: Anniston, AL

DRILL METHOD: Sonic
DRILL RIG: Sonic
DATE STARTED: 8/13/15
DATE COMPLETED: 8/13/15

not surveyed
GS ELEVATION:
TOC ELEVATION:

DEPTH W.L.:10.4
DATE W.L.:08/14/2015
TIME W.L.:13:00
WEATHER:Sunny
TEMPERATURE:84

DEPTH (ft)	ELEVATION (ft)	SOIL PROFILE DESCRIPTION	USCS	GRAPHIC LOG	ELEV. DEPTH (ft)
0		0.0 - 5.0 FILL			
5		5.0 - 7.0 SAND and SILT, black organic fine sand with trace gravel (4cm)			5.0
		7.0 - 15.0 SILT, trace coarse sand & gravel, red/brown, stiff			7.0
15		15.0 - 30.0 CLAY / SILT, trace sand & gravel (iron nodules 1cm), stiff			15.0
30		30.0 - 35.3 CLAY, very little silt, trace sand, soft			30.0
35		Boring completed at 35.3 ft			
45					

MONITORING WELL DIAGRAM and NOTES

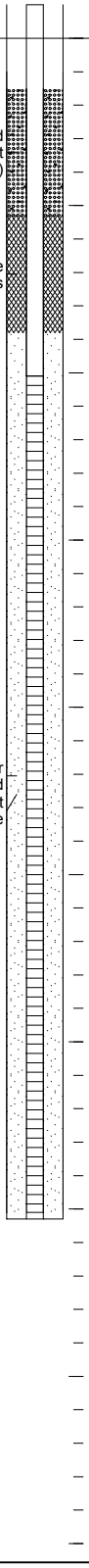

NOTES

Final Turbidity = 183 NTU; 67 Gallons @ ~0.8 gpm

WELL CONSTRUCTION DETAILS

WELL CASING
Interval: 0-10.1'
Material: PVC
Diameter: 4"
Joint Type: Threaded

SURFACE CASING
Interval: NA
Material: NA
Diameter: NA

WELL SCREEN
Interval: 10.1-35.1'
Material: PVC
Diameter: 4"
Slot Size: 0.006"
End Cap: PVC

FILTER PACK
Interval: 8.8-35.3'
Type: 20/40 Filter Sand

FILTER PACK SEAL
Interval: 5.3-8.8'
Type: Bentonite Chips

ANNULUS SEAL
Interval: 1.5-5.3'
Type: Portland Cement

WELL COMPLETION
Pad: None
Protective Casing: None

DRILLING METHODS
Soil Drill: Sonic
Rock Drill: N/A

LOG SCALE: 1 in = 5.5 ft
DRILLING COMPANY: Cascade
DRILLER: Vernon Scott

GA INSPECTOR: R. Poff
CHECKED BY: M. Hampton
DATE: 8/26/15

Golder Associates

BOREHOLE RECORD SOLUTIA GINT REVISED.GPJ PIEDMONT.GDT 8/31/15

RECORD OF BOREHOLE IW-28

SHEET 1 of 1

PROJECT: Solutia
PROJECT NUMBER: 130-2962
DRILLED DEPTH: 37.7 ft
LOCATION: Anniston, AL

DRILL METHOD: Sonic
DRILL RIG: Sonic
DATE STARTED: 8/12/15
DATE COMPLETED: 8/12/15

not surveyed
GS ELEVATION:
TOC ELEVATION:

DEPTH W.L.:22.5
DATE W.L.:08/15/2015
TIME W.L.:07:00
WEATHER:Sunny
TEMPERATURE:85

DEPTH (ft)	ELEVATION (ft)	SOIL PROFILE: DESCRIPTION	USCS	GRAPHIC LOG	ELEV. DEPTH (ft)
0		0.0 - 4.0 FILL			
5		4.0 - 15.0 SILTY SAND/SANDY SILT, trace to some fine sand & gravel (4-8 mm)			4.0
15		15.0 - 37.7 CLAY, trace coarse sand to coarse gravel (4 mm to 60 mm), firm to very stiff			15.0
37.7		Boring completed at 37.7 ft			

MONITORING WELL DIAGRAM and NOTES

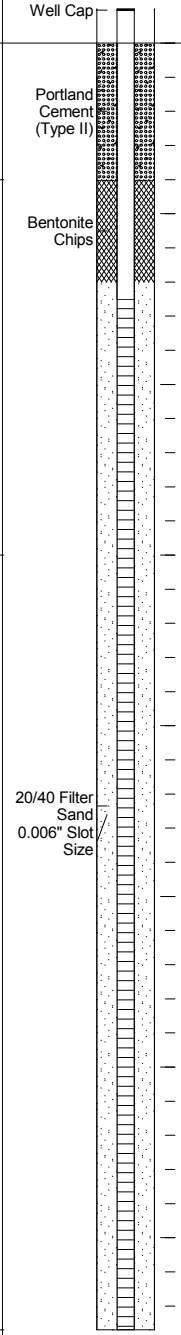

NOTES

Final Turbidity = 288 NTU; 17 Gallons @ ~0.4 gpm

WELL CONSTRUCTION DETAILS

WELL CASING
Interval: 0-7.5'
Material: PVC
Diameter: 4"
Joint Type: Threaded

SURFACE CASING
Interval: NA
Material: NA
Diameter: NA

WELL SCREEN
Interval: 7.5-37.5'
Material: PVC
Diameter: 4"
Slot Size: 0.006"
End Cap: PVC

FILTER PACK
Interval: 7-37.7'
Type: 20/40 Filter Sand

FILTER PACK SEAL
Interval: 4-7'
Type: Bentonite Chips

ANNULUS SEAL
Interval: 0-4'
Type: Portland Cement

WELL COMPLETION
Pad: None
Protective Casing: None

DRILLING METHODS
Soil Drill: Sonic
Rock Drill: N/A

LOG SCALE: 1 in = 5.5 ft
DRILLING COMPANY: Cascade
DRILLER: Vernon Scott

GA INSPECTOR: R. Poff
CHECKED BY: M. Hampton
DATE: 8/26/15

Golder Associates

BOREHOLE RECORD SOLUTIA GINT REVISED.GPJ PIEDMONT.GDT 8/31/15

RECORD OF BOREHOLE IW-29

SHEET 1 of 1

PROJECT: Solutia
PROJECT NUMBER: 130-2962
DRILLED DEPTH: 37.4 ft
LOCATION: Anniston, AL

DRILL METHOD: Sonic
DRILL RIG: Sonic
DATE STARTED: 8/12/15
DATE COMPLETED: 8/12/15

not surveyed
GS ELEVATION:
TOC ELEVATION:

DEPTH W.L.:10.9
DATE W.L.:08/15/2015
TIME W.L.:08:00
WEATHER:Sunny
TEMPERATURE:75

DEPTH (ft)	ELEVATION (ft)	SOIL PROFILE: DESCRIPTION	USCS	GRAPHIC LOG	ELEV. DEPTH (ft)
0		0.0 - 4.0 FILL			
5		4.0 - 15.0 SILTY SAND/SANDY SILT, trace to some gravel			4.0
15		15.0 - 37.4 CLAY, trace fine to coarse sand, stiff			15.0
35		Boring completed at 37.4 ft			

MONITORING WELL DIAGRAM and NOTES

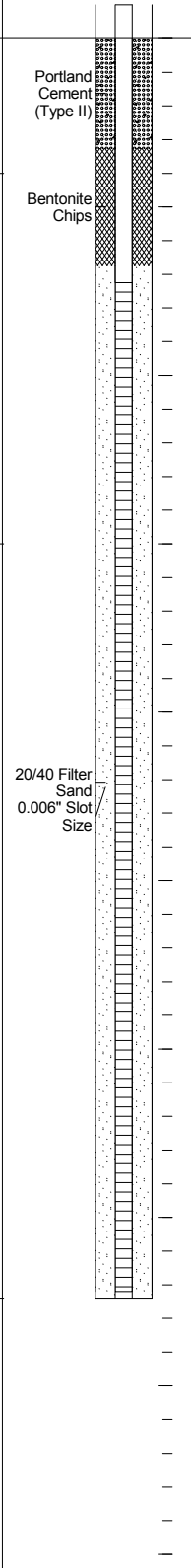

NOTES

Final Turbidity = >1000 NTU; 45 – Gallons @ ~0.9 gpm

WELL CONSTRUCTION DETAILS

WELL CASING
Interval: 0-7.25'
Material: PVC
Diameter: 4"
Joint Type: Threaded

SURFACE CASING
Interval: NA
Material: NA
Diameter: NA

WELL SCREEN
Interval: 7.25-37.2'
Material: PVC
Diameter: 4"
Slot Size: 0.006"
End Cap: PVC

FILTER PACK
Interval: 6.75-37.4'
Type: 20/40 Filter Sand

FILTER PACK SEAL
Interval: 3.25-6.75
Type: Bentonite Chips

ANNULUS SEAL
Interval: 0-3.25'
Type: Portland Cement

WELL COMPLETION
Pad: None
Protective Casing: None

DRILLING METHODS
Soil Drill: Sonic
Rock Drill: N/A

LOG SCALE: 1 in = 5.5 ft
DRILLING COMPANY: Cascade
DRILLER: Vernon Scott

GA INSPECTOR: R. Poff
CHECKED BY: M. Hampton
DATE: 8/26/15

Golder Associates

BOREHOLE RECORD SOLUTIA GINT REVISED.GPJ PIEDMONT.GDT 8/31/15

WELL DEVELOPMENT FIELD RECORD

SITE DESCRIPTION

Project Name: Solutia OU3
Project Number: 13-02962-GW
Location: Anniston, AL

WELL DESCRIPTION

Well No.: 1W-26
Date: 8/14/15
Time at Well Site: 800
Date of Well Installation: 8/13/15
Screen Length: 25 FT
Developed By: RP / Cascade
Time On Site: 800
Time Off Site: 1630

WEATHER CONDITIONS

Temperature: ~80°F
Wind: Slight
Precipitation: Cloudy.

COLUMN OF WATER IN WELL

TOC relative to Ground Surface: ~4" ~~feet~~
TOC Elevation: — feet MSL
Depth of Well Before Development: 35.1 feet TOC
Depth to Water Before Development: 14.05 feet ~~MSL~~ TOC
Column of Water in Well: 21 feet
Depth of Well After Development: 35.2 feet TOC

VOLUME OF WATER TO BE REMOVED

Casing Inside Diameter: 4 inches
Casing Volume: 0.65 gal./ft.
Column of Water in Well: 21 feet
Volume of Water in Well: 13.7 gallons
Well Volumes to be Removed: —
Min. Volume to be Removed: — gallons

Development Method: Surge + Pump

Type of Dev. Equipment: ~~Submersible~~ whale Pump
Surge block

Well Pumped Dry?: Yes No

FIELD PARAMETERS

Date/Time	Volume Removed (gallons)	Specific Conductance (µmhos/cm)	Temperature (°C)	pH (S.U.)	TURBIDITY (NTU)	Remarks
1328	~20	135	19.65	5.77	>1000	
1333	~24	~~to~~ 180	19.43	5.34	>1000	DTW: 31 FT
1339	~30	164	19.52	7.17	>1000	DTW: 33 FT
1444	~31	85	19.65	7.19	>1000	DTW: 34.7 FT
1556	~33	102	19.54	8.85	>1000	DTW: 34.3 FT

Start Pumping: 1309
End Pumping: 1602

Average Pump Rate: 0.7 gal./min.
Total Volume Removed: 33 gallons

NOTES:

25.3 FT @ 1324 @ ~1 GPM. 1331 ~1 GPM. Stop pump @ 1346
Well Purged Dry. Recovered to 31 FT @ 1429 1442 Start Pump.
Pump dry @ 1447 Start pump @ 1555 Dry @ 1602 Pump off

Field Team Leader: R.Poff

Signature: [signature]

WELL DEVELOPMENT FIELD RECORD

SITE DESCRIPTION

Project Name: Solutia OU3
Project Number: 13-02962-GW
Location: Anniston, AL

WELL DESCRIPTION

Well No.: IW-27
Date: 8/14/15
Time at Well Site: 1300
Date of Well Installation: 8/14/15
Screen Length: 25 FT
Developed By: RwP/Cascade
Time On Site: 800
Time Off Site: 1600

WEATHER CONDITIONS

Temperature: 84°F
Wind: Slight
Precipitation: Cloud

COLUMN OF WATER IN WELL

TOC relative to Ground Surface: 0 feet
TOC Elevation: - feet MSL
Depth of Well Before Development: 35.3 feet TOC
Depth to Water Before Development: 10.4 feet ~~MSL~~ TOC
Column of Water in Well: 25.1 feet
Depth of Well After Development: 35.3 feet TOC

VOLUME OF WATER TO BE REMOVED

Casing Inside Diameter: 4 inches
Casing Volume: 0.65 gal./ft.
Column of Water in Well: 25.1 feet
Volume of Water in Well: 16.3 gallons
Well Volumes to be Removed: ~
Min. Volume to be Removed: - gallons

Development Method: Surge & Pump
Well Pumped Dry?: (Yes) No

Type of Dev. Equipment: Whale Pump
Surge Block

FIELD PARAMETERS

Date/Time	Volume Removed (gallons)	Specific Conductance (µmhos/cm)	Temperature (°C)	pH (S.U.)	TURBIDITY (NTU)	Remarks
1354	16.5	121	21.79	7.62	>1000	DTW = 19.2 FT
1406	35	110	20.85	~~8.2750~~	>1000	DTW = 25.3 FT
1412	40	116	20.65	7.55	977	DTW = 27.2 FT
1424	47	116	20.68	7.95	>1000	DTW = 30.5 FT
1438	50	121	20.60	7.90	>1000	DTW = 34.1 FT
1530	52	165	20.56	7.69	383	DTW = 23.4 FT
1542	60	167	20.53	8.35	163	DTW = 29.6 FT
1546	63	164	20.43	8.22	81.1	DTW = 31.0 FT
1549	65	161	20.32	8.26	100	DTW = 32.0 FT
1552	67	153	20.31	8.37	183	DTW = 33.0 FT

Start Pumping: 1343
End Pumping: 1553
Average Pump Rate: 0.8 gal./min.
Total Volume Removed: 67 gallons

NOTES: ~~Purge~~
1.5 ~~0.75~~ gpm @ 1351, DTW = 16.8 FT 1410 ~ 1 GPM, 1421 ~ 0.75 GPM
1442 - well near dry - Stop pump. 1527 - DTW = 9.8 FT
1528 - Start pumping. 0.75 gpm @ 1535

Field Team Leader: R.Poff
Signature: [signature]

WELL DEVELOPMENT FIELD RECORD

SITE DESCRIPTION

Project Name: Solutia OU3
Project Number: 13-02962-GW
Location: Anniston, AL

WEATHER CONDITIONS

Temperature: 75-80°F
Wind: moderate
Precipitation: —

WELL DESCRIPTION

Well No.: IW-29
Date: 8/15/15
Time at Well Site: 700
Date of Well Installation: 8/12/15
Screen Length: 39.5'
Developed By: Rup/Cascade
Time On Site: 700
Time Off Site: 1200

COLUMN OF WATER IN WELL

TOC relative to Ground Surface:	2.9	feet
TOC Elevation:	-	feet MSL
Depth of Well Before Development:	40.3	feet TOC
Depth to Water Before Development:	13.75	feet ~~MSL~~
Column of Water in Well:	26.6'	feet
Depth of Well After Development:	40.3	feet TOC

VOLUME OF WATER TO BE REMOVED

Casing Inside Diameter:	4	inches
Casing Volume:	0.65	gal./ft.
Column of Water in Well:	26.6'	feet
Volume of Water in Well:	17.3	gallons
Well Volumes to be Removed:	—	
Min. Volume to be Removed:	-	gallons

Development Method: Surge & Pump
Well Pumped Dry?: (Yes) No
Type of Dev. Equipment: Surge Block w/ Pump

FIELD PARAMETERS

Date/Time	Volume Removed (gallons)	Specific Conductance (µmhos/cm)	Temperature (°C)	pH (S.U.)	TURBIDITY (NTU)	Remarks
810	~4	214	18.63	8.75	>1000	DTW=16.2
815	~12	210	19.64	8.34	674	DTW=22.5 (2 gal
822	~19	210	18.65	9.18	248	DTW=
826	~23	243	18.30	8.50	175	DTW=28.7
832	~29	268	18.34	8.30	293	DTW=31.5
906	~36	323	19.04	8.53	488	DTW=35.8
912	~39	256	19.18	8.50	>1000	DTW=38.4
915	~41	221	19.36	9.05	>1000	DTW=NA
1141	~43	326	19.90	7.53	538	DTW=39.
1144	~45	355	20.08	6.93	>1000	Dry @ ~40'

Start Pumping: 808
End Pumping: 1144
Average Pump Rate: 0.9 gal./min.
Total Volume Removed: 45 gallons

NOTES:

South well 1.5 gpm @ 814 (1.5-2 gpm), ~1 gpm @ 825
~1 gpm @ 830 * Pump off @ 833 - keep pump near bottom *
859 Start pump. ~1 gpm @ 904 ~0.75 gpm @ 910
Dry @ 917 1139 Start purge. 1144

Field Team Leader: R.Poff
Signature:

WELL DEVELOPMENT FIELD RECORD

SITE DESCRIPTION

Project Name: Solutia OU3
Project Number: 13-02962-GW
Location: Anniston, AL

WEATHER CONDITIONS

Temperature: 75-80F
Wind: moderate
Precipitation: -

WELL DESCRIPTION

Well No.: IW-28
Date: 8/15/15
Time at Well Site: 700
Date of Well Installation: 8/12/15
Screen Length: 30 FT
Developed By: Dus / Cascade
Time On Site: 700
Time Off Site: 1100

COLUMN OF WATER IN WELL

TOC relative to Ground Surface: 2.6 feet
TOC Elevation: - feet MSL
Depth of Well Before Development: 40.3 feet TOC
Depth to Water Before Development: 25.1 feet ~~MSL~~ TOC
Column of Water in Well: 15.2 feet
Depth of Well After Development: 40.3 feet TOC

VOLUME OF WATER TO BE REMOVED

Casing Inside Diameter: 4 inches
Casing Volume: 0.65 gal./ft.
Column of Water in Well: 15.2 feet
Volume of Water in Well: 9.9 gallons
Well Volumes to be Removed: -
Min. Volume to be Removed: - gallons

Development Method: Surge & Pump
Well Pumped Dry?: (Yes) No

Type of Dev. Equipment: Surge Block
Whale Pump

FIELD PARAMETERS

Date/Time	Volume Removed (gallons)	Specific Conductance (µmhos/cm)	Temperature (°C)	pH (S.U.)	TURBIDITY (NTU)	Remarks
746	~3	329	18.60	7.80	>1000	DTW = 27.6
750	~7	316	18.59	7.93	>1000	DTW = 29.5
754	~10	250	18.64	7.01	475	DTW = 32.8
757	~12	253	18.55	6.85	72.5	DTW = 33.8
801	~14	291	18.66	7.72	536	Surge pump @ 800 DTW = 35.5
804	~16	376	18.77	6.97	140	DTW = 36.6
1133	~17	418	19.22	5.30	288	DTW = 39.5

Start Pumping: 742
End Pumping: 1136
Average Pump Rate: 0.4 gal./min.
Total Volume Removed: 17 gallons

NOTES:

744 @ 1 gpm 751 @ ~0.75 gpm Surge pump @ 800
North well. Well dry @ 817 Pump off @ 39.5 FT BTW
932 Start Dry @ 1136

Field Team Leader: R.Poff **Signature:** RM Poff

December 11, 2015

SENT VIA FEDERAL EXPRESS

Mr. Chip Crockett
Alabama Department of Environmental Management
Industrial Hazardous Waste Branch
Land Division
1400 Coliseum Boulevard
Montgomery, Alabama 36130-1463

Re: Summary of Well Abandonment Procedures (OWR-6D)
Solutia Inc., Anniston, Alabama; EPA ID/Permit Number – ALD004019048

Dear Mr. Crockett:

Solutia Inc. (Solutia) is providing this letter to describe the procedures used to abandon a former observation well (OWR-6D) at its production facility (facility) in Anniston, Alabama. As approved by the United States Environmental Protection Agency (EPA) and the Alabama Department of Environmental Management (ADEM), this well was abandoned as it is no longer sampled as part of the groundwater monitoring program, and it is located within the limits of one of the proposed cover systems for the Operable Unit 3 Remedial Action (RA) currently being conducted at the facility. The abandonment work was performed during the week of August 10, 2015. A licensed Alabama water well drilling contractor (Cascade Drilling, L.P.) performed the work, with oversight provided by Golder Associates, Inc. (Golder). The well consisted of 10-inch diameter steel casing from the ground surface to approximately 35 feet below ground surface (ft-bgs). The remaining portion of the well was uncased (4.25 inches in diameter). The reported total depth of the well was approximately 65 ft-bgs. The static water level at the time of abandonment was 20 ft-bgs. Figure 1 shows the former location of the well at the Site, and Attachment A includes the boring and well installation log for OWR-6D.

The portion of the well that included the 10-inch diameter steel casing was drilled out using an 8-inch diameter drill bit. The lower, uncased portion of the well was drilled out using a 6-inch diameter drill bit to a depth of 67 ft-bgs. The well was abandoned by tremie-grouting the well from the bottom to top using a cement-bentonite grout mix.

Surface completion was then performed and included removing and destroying the existing concrete pad and cutting the 10-inch casing flush at the ground surface. The well location will be covered with six inches of clean fill, a geomembrane liner, and 18-inches of cover soil as part of Solutia's RA Cover System Project. A schematic of the abandoned well is included as Figure 2.

If you should have any questions or need additional information, please don't hesitate to contact me at (256) 231-8404.

Sincerely,

E. Gayle Macolly
Manager, Remedial Projects
Solutia Inc.

Attachments: Figure 1 – OWR-6D Location Plan
Figure 2 – Abandoned Well Schematic
Attachment A – Original Drilling Logs

cc: Alan Farmer, USEPA Region IV
Pam Scully, USEPA Region IV
G. Douglas Jones, Esq., Jones & Hawley, PC
Thomas Dahl, Dahl Environmental Associates

FIGURES

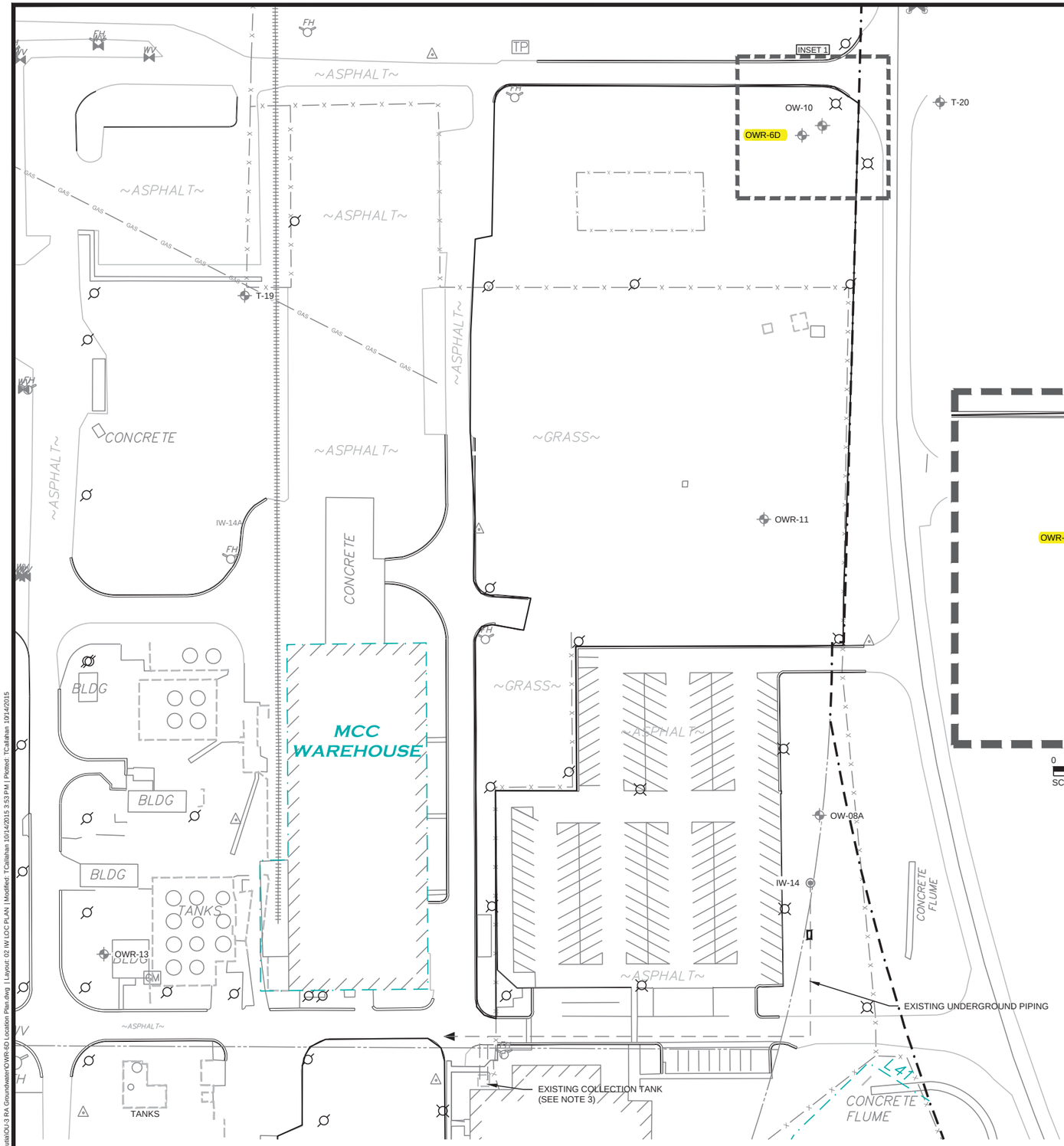

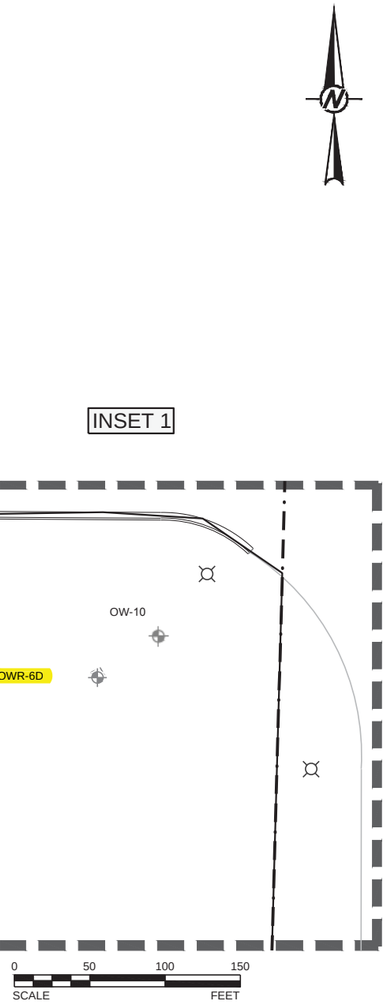

LEGEND

- SURVEYED BOUNDARY FOR OU-3
- FENCE
- EDGE OF PAVEMENT / CURB
- RAILROAD
- MONITORING WELL
- EXISTING INTERCEPTOR WELL
- LIGHT AND POWER POLES
- FIRE HYDRANT
- EXISTING UNDERGROUND PIPING

REFERENCE

1.) ALTA / ACSM LAND TITLE SURVEY OF: OPERABLE UNIT 3 OF THE ANNISTON PCB SITE; PREPARED FOR: SOLUTIA INC." BY LOWERY & ASSOCIATES LAND SURVEYING, LLC; DATED APRIL 17, 2013.

PROJECT
PHARMACIA LLC / SOLUTIA INC.
OPERABLE UNIT 3 REMEDIAL ACTION
GROUNDWATER COMPONENTS
ANNISTON PCB SITE, ALABAMA

TITLE
OWR-6D LOCATION PLAN (AREA A)

Golder Associates

PROJECT No.	1302962RDA.20.1		FILE No.	OWR-6D Location Plan
DESIGN	TPC	2015-04-17	SCALE	AS SHOWN
CADD	SEP / RJS	2015-04-17	SHEET	01
CHECK	KGK	2015-04-24		
REVIEW	SLM	2015-04-24		

\\atlanta\l4\43\3980 - Solutia\OU-3 RA Groundwater\OWR-6D Location Plan.dwg | Layout: 02 IW LOC PLAN | Modified: TCallahan 10/14/2015 3:53 PM | Plotted: TCallahan 10/14/2015

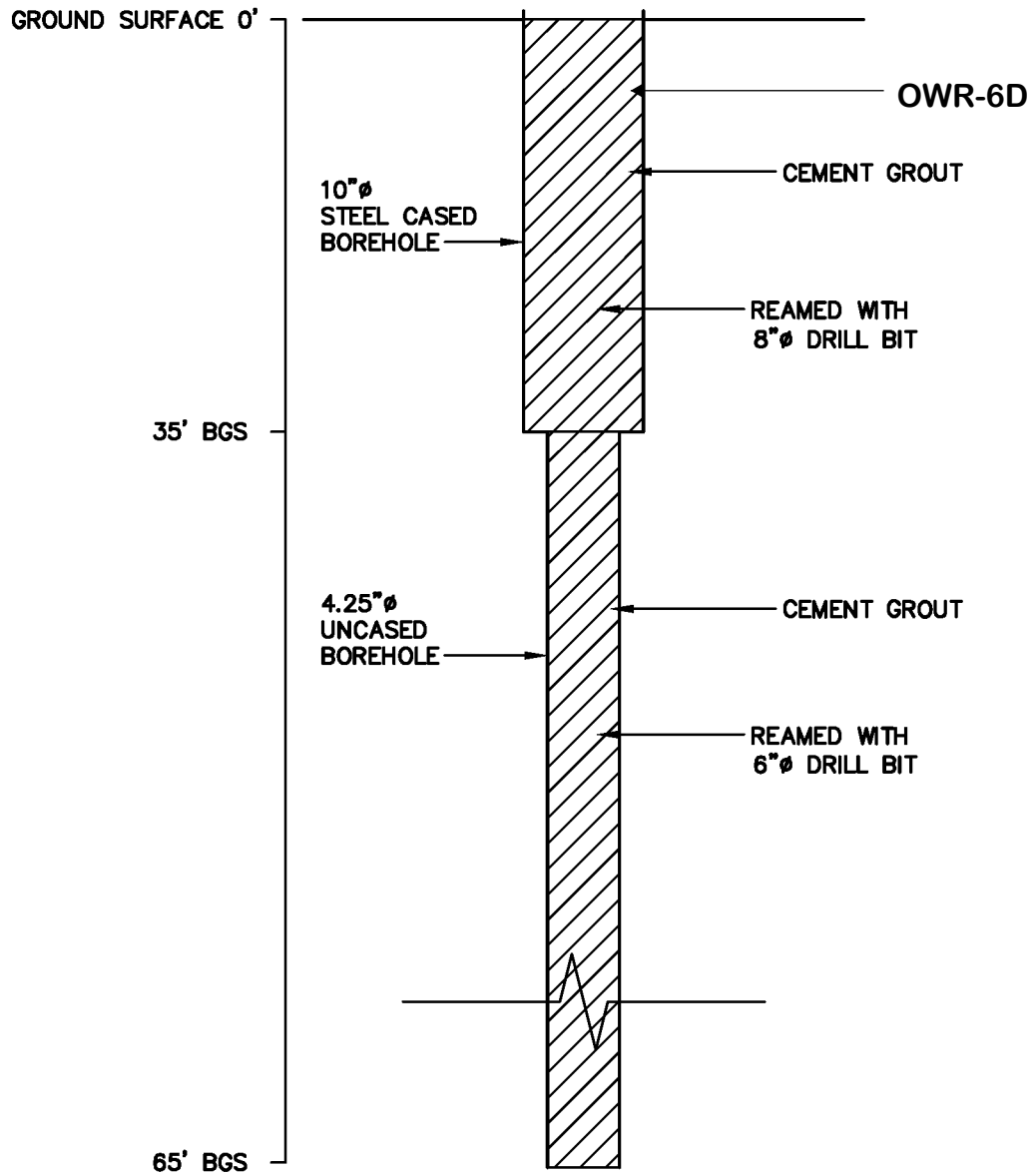

BGS = BELOW GROUND SURFACE

REV	DATE	DES	REVISION DESCRIPTION	CADD	CHK	RVW
1	–	–	–	–		

PROJECT

SOLUTIA, INC.
ANNISTON FACILITY
ANNISTON, ALABAMA

TITLE

ABANDONED WELL SCHEMATIC

Golder Associates
Atlanta, Georgia

PROJECT No.		1302962	FILE No.	ABANDONED WELL	
DESIGN	–	–	SCALE	NTS	REV. –
CADD	TPC	10/14/2015			
CHECK					
REVIEW					

FIGURE 2

Drawing file: OWR-6D ABANDONED WELL.dwg Oct 14, 2015 - 4:00pm

ATTACHMENT A

BORING AND WELL INSTALLATION LOG FOR OWR-6D

PROJECT: SOLUTIA

PROJECT LOCATION: ALABAMA

PROJECT NUMBER: 983-3223

RECORD OF BOREHOLE OWR-6D

BORING DATE: 6/3/98

BORING LOCATION:

SHEET: 1 OF 2

DATUM: FT-MSL

DEPTH SCALE FEET	BORING METHOD	SOIL PROFILE DESCRIPTION	USCS	GRAPHIC LOG	ELEV / DEPTH	SAMPLES NUMBER	TYPE	BLOWS / 6 In	N	REC/ATT	NOTE
0	HSA 4 1/4, 12 1/4	(FILL) Soft, dry, light brown to dark brown, CLAYEY SILT, little fine-coarse sand, trace fine-coarse gravel	ML		0.00						
						1	SS	1,2,1,2	3	1.0/2.0	
5		Soft to firm, dry to moist, light brown and reddish brown and tan, mottled, SILTY CLAY, little to some fine-coarse sand and fine-coarse gravel, weathered sandstone gravel (weathered residuum)	CL		4.00	2	SS	1,2,5,4	7	1.0/2.0	
						3	SS	7,9,12,14	21	2.0/2.0	
						4	SS	5,12,12,9	24	1.0/2.0	
10						5	SS	2,5,2,4	7	1.0/2.0	
						6	SS	3,5,5,4	10	1.0/2.0	
15		14' - 18' same as above except soft, wet				7	SS	4,5,3,3	8	2.0/2.0	
						8	SS	3,3,4,5	7	0.5/2.0	
20		Stiff, damp to very moist, red-brown-tan, mottled, SILTY CLAY, trace to some fine-coarse sand and gravels, weathered sandstone common (weathered residuum)	CL		18.00	9	SS	5,7,11,12	18	2.0/2.0	
						10	SH	-	NA		
						11	SS	4,7,7,10	14	1.75/2	
25						12	SS	3,4,7,7	11	1.75/2	
						13	SS	7,8,10,9	19	1.0/2.0	
						14	SS	4,4,8,10	12	0.5/2.0	
30						15	SS	5,7,7,9	14	2.0/2.0	
						16	SS	7,9,6,6	15	2.0/2.0	
35											34' - 65' BGS sample recovery poor. Samples remolded by wood fragments during drilling. Soft, wet conditions likely due to remolding. Intact, undisturbed samples indicate stiff, moist silty clay
						17	CME	-	NA		
40											

DRILL RIG: CME-75

DRILLING CONTRACTOR: EEI

DRILLER: E. FULLER

Golder Associates

LOGGED: CDH/MNH

CHECKED: SFR

DATE: 10/7/98

PROJECT: SOLUTIA
PROJECT LOCATION: ALABAMA
PROJECT NUMBER: 983-3223

RECORD OF BOREHOLE OWR-6D

BORING DATE: 6/3/98
BORING LOCATION:

DATUM: FT-MSL

DEPTH SCALE FEET	BORING METHOD	SOIL PROFILE: DESCRIPTION	USCS	GRAPHIC LOG	ELEV / DEPTH	SAMPLES: NUMBER	TYPE	BLOWS / 6 in	N	REC/ATT	NOTE
40	HSA 4 1/4, 12 1/4	See previous page	CL			18	SH	-	NA		
						19	CME	-	NA	1.0/5.0	
45						20	SH	-	NA		
						21	SS	4,4,6,8	10	0.2/2.0	
						22	CME	-	NA	0.5/3.0	
50						23	CME	-	NA	1.0/5.0	
55						24	CME	-	NA		
60						25	SH	-	NA	0.8/2.0	
						26	SS	2,3,3,4	6	1.5/2.0	
65						27	SS	4,3,4,4	7	1.5/2.0	
		Boring completed @ 65' BGS			65.00						
70											
75											
80											

DRILL RIG: CME-75
DRILLING CONTRACTOR: EEI
DRILLER: E. FULLER

Golder Associates

LOGGED: CDH/MNH
CHECKED: SFR
DATE: 10/7/98

MONITORING WELL INSTALLATION LOG

JOB NO. 983-3223 PROJECT SOLUTIA/RFI/AL WELL NO. OWR-6D SHEET 1 of 1

GA INSP. CDH/MNH DRILLING METHOD HSA (4 1/4, 12 1/4) GROUND ELEV. 734.50 WATER DEPTH 52.16

WEATHER SUNNY DRILLING COMPANY EEI TOC ELEV. 736.79 DATE/TIME 8-11-98

TEMP. 95 DRILL RIG CME-75 DRILLER E. FULLER STARTED 10:5-/5-19-98 (TIME / DATE) COMPLETED 16:00/6-3-98 (TIME / DATE)

LOCATION / COORDINATES N/A

MATERIALS INVENTORY

WELL CASING 2 in. dia. 70 l.f. WELL SCREEN 2 in. dia. 10 l.f. BENTONITE SEAL PELLETS

CASING TYPE PVC SREEN TYPE PVC INSTALLATION METHOD POURED

JOINT TYPE FLUSH SLOT SIZE 0.008 FILTER PACK QTY. 9 BAGS

GROUT QUANTITY 12 BAGS CENTRALIZERS N/A FILTER PACK TYPE GRADE 2 SILICA SAND

GROUT TYPE CEMENT/BENTONITE DRILLING MUD TYPE N/A INSTALLATION METHOD TREMMIED

ELEV./DEPTH	SOIL/ROCK DESCRIPTION
GROUND SURFACE	
0.0	REFER TO RECORD OF BOREHOLE OWR-6D FOR LITHOLOGIC DISCRIPTION
10.0	
20.0	
30.0	
40.0	
50.0	
60.0	
70.0	
80.0	
90.0	
100.0	

WELL SKETCH

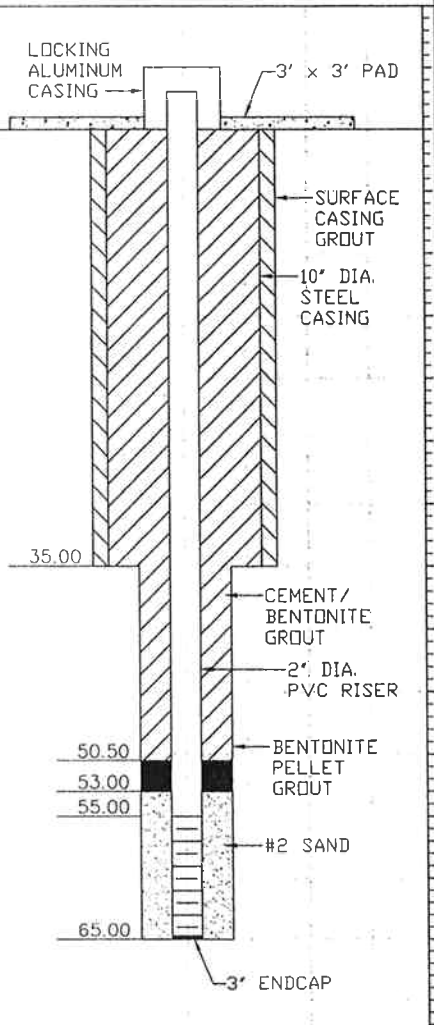

INSTALLATION NOTES

Installed and grouted 10" dia. steel surface casing to 35' BGS with 12 1/4" dia. augers. Resumed boring with 4 1/4" dia. augers to 65' BGS. Installed 10' of 2" dia., 0.008 slot PVC screen and 60' of 2" dia. PVC riser to 65' BGS. Tremmied 9 bags of sand to ~53' BGS. Poured (1) 5 gal. buckets of bentonite pellets to ~50.5' BGS. Grouted remainder of open annulus with 95%-5% cement bentonite grout mixture. Installed locking aluminum protective casing and 3' x 3' concrete pad for surface finish.

WELL DEVELOPMENT NOTES

Well made very little water and recovered slowly. Surged and pumped as recovery allowed over 3 week period. Minimum of 6 well volumes removed.

APPENDIX T

GROUNDWATER TREATMENT SYSTEM EQUIPMENT INFORMATION

APPENDIX T1

Carbon Treatment Enclosures

AES PRECAST

PRECAST CONCRETE BUILDING SYSTEMS

REVISED SUBMITTALS

Job:

Carbon Treatment Enclosure Anniston, AL

October 29, 2015

3851 17th Street, Northport, AL 35476 Phone: 205-333-8000 Fax: 205-333-0181

Toll Free Phone: 800-342-3274 Web Site: http:// www.aesprecast.com

INDEX

1. ENCLOSURE SPECIFICATION

2. DRAWINGS

3. DOORS AND HARDWARE

4. EXTERIOR FINISH

5. ELECTRICAL

6. HEATING AND VENTILATION

ENCLOSURE SPECIFICATIONS

STANDARD PRE-ASSEMBLED PRECAST CONCRETE BUILDING

PART 1 - GENERAL

1.01 SUMMARY

Contractor to furnish precast concrete *transportable* building. Building to be delivered and placed on owner's prepared foundation in accordance with manufacture's recommendations (PART 3). Precast building to be manufactured by AES PRECAST CO., INC., 3851 17th Street, Northport, AL 35476. Building to be provided by manufacturer with all necessary openings as specified by contractor in conformance with manufacturer's structural requirements.

1.02 QUALITY ASSURANCE

A. ACI-318-08, "Building Code Requirements for Reinforced Concrete". Concrete Reinforcing Institute, "Manual of Standard Practice".

B. ANSI/ASCE-7-05 "Building Code Requirements for Minimum Design Loads in Buildings and Other Structures".

C. Alabama State Building Codes

D. UL-752 Test Method Level Four (4) for Bullet Resistance certified by an Independent Structural Engineer.

E. Concrete Reinforcing Institute, "Manual of Standard Practice".

F. Building fabricator must have a minimum of 5-years experience manufacturing and setting transportable precast concrete buildings.

G. PCI Design Handbook – 6th Edition.

H. International Building Code.

I. National Electrical Code.

J. Manual of Steel Construction – LRFD AISC – 13th Edition.

K. Manual of Steel Construction – ASD AISC – 13th Edition.

1.03 DIMENSIONS & DESIGN LOADS

A. Dimensions:

Exterior: 8'-0"W x 8'-0"L x 9'-6"H

Interior: 7'-4"W x 7'-4"L x 8'-0"H

Walls are 4" Thick; Floor is 6" Thick (plus 5" curb for sump); Roof is 6" @ Center and 4" @ Edge, giving a 2" slope from center to edge.

B. Design Loads:

1. **Seismic load performance category 'C', Exposure Group III**
2. **Standard Live Roof Load - 60 PSF**
3. **Standard Floor Load - 250 PSF**
4. **Standard Wind Loading - 150 MPH**

C. Roof: Roof panel shall slope 2" from center to edge. The roof shall extend a minimum of 2½" beyond the wall panel on each side.

D. Roof, floor and wall panels must each be produced as single component monolithic panels. No roof, floor, or vertical wall joints will be allowed, except at corners. Wall panels shall set on top of floor panel.

PART 2 - PRODUCTS

2.01 MATERIALS

A. Concrete: Steel-reinforced, polypropylene fiber reinforced, 6000 PSI minimum 28-day compressive strength, air-entrained (ASTM C260).

B. Reinforcing Steel: ASTM A615, grade 60 unless otherwise indicated.

C. Reinforcing Fiber: Polypropylene fiber, Fibermesh @ 1.5 pounds per cubic yard.

D. Caulking: All joints between panels shall be caulked on the exterior and interior surface of the joints. Caulking shall be SIKAFLEX-1A elastic sealant.

E. Panel Connections: All panels shall be securely welded together with 1/4" thick steel brackets. Steel is to be of structural quality, hot-rolled carbon complying with ASTM A283, Grade C. Cast-in anchors used for panel connections to be Dayton-Superior #F-63, or equal.

F. Curb: On interior of building there shall be a continuous curb poured around the entire perimeter. Curb shall be steel reinforced and bonded to the floor slab with an epoxy bonding agent. Curb shall have a dimension of 5"W x 6H". Sump area shall be coated with two-part epoxy.

2.02 ACCESSORIES

A. Doors and Frames: The building shall be equipped with one SINGLE 3'-0" x 7'-0" x 1 ¾" Galvanized Steel Doors and frame, insulated.

Door Hardware:

1. Hinges: Stainless Steel Vandal Proof (primed with non-removable hinge pins), 3 per door.

2. Lock Set: Panic Exit Device Mortise Lock with 6 pin removable core.

3. Threshold: Aluminum threshold with neoprene seal.

4. Door Stop: Hydraulic Door Closer.

5. Drip Cap: National Guard 16A.

2.03 FINISHES

A. Interior of Building: Floor – Concrete with Smooth Finish, Painted with Epoxy, Gray. Walls and Ceiling – Concrete with Smooth Finish, Painted with Epoxy, White.
B. Exterior of Building: Concrete with Exposed Aggregate River Rock and Painted Trim, Tan.
C. Roof to have smooth trowel finish sealed with a liquid applied roofing system, White.

2.04 ELECTRICAL

A. (2) Interior 2-bulb 4' Wet Location Fluorescent Light Fixtures, separate circuits on separate switches.
B. (1) Exterior 70W HPS Light Fixture, on Photocell with shut-off switch.
C. (1) Exterior Alarm Light, Shipped loose in building to be installed on site by others – PLEASE CHOOSE COLOR.
D. (3) Interior 20A GFCI Duplex Receptacles.
E. (1) Interior Electrical Panel 150A 30 Circuit Main Breaker NEMA 3R, with Bolt-In Breakers. Note: Wiring to be in Surface Mounted RMC.

2.05 VENTILATION

A. (1) 12" Shutter Mounted Exhaust Fan, on Thermostat with shut-off switch, with Rain Hood and Screen.
B. (1) 12"x12" Intake Gravity Damper, with Rain Hood and Screen.

2.06 A/C

A. N/A

2.07 HEATING

A. (1) 3kW Electric Utility Heater, Wall Mounted, on Thermostat with shut-off switch.

2.08 PLUMBING

A. N/A

2.09 MISCELLANEOUS

A. Containment Sump per Drawing.
B. PLEASE CONFIRM SIZE AND LOCATION OF ALL OPENINGS BEFORE PRODUCTION.

PART 3 - EXECUTION

3.01 SITE PREPARATION (Standard Pre-assembled Building)

A. AES Precast Building shall bear fully on a crushed stone base that is at least one foot larger than the length and width of building.

B. Stone shall be a minimum of 4" thick or down to firm subgrade. Substrate below stone must have a vertical soil capacity of 1,500 pounds per square foot. Stone shall be 3/8" or smaller and placed within a perimeter form with flat and level top edge for screeding, such as concrete curbing, railroad ties, or compacted earth.

C. Stone must be screeded to level within 1/4" in both directions. Forming material shall remain around stone after the building is set.

D. The crushed stone base shall be kept within the confines of the soil or perimeter form. Do not allow the stone base to become unconfined so that it may wash, erode or otherwise be undermined.

~~***OR***~~

~~**3.02 SITE PREPARATION (Standard, Pump House, and Expanded Pre-assembled Building)**~~

~~**A. AES Precast Building shall bear fully on pavement or concrete slab that has length and width equal to or greater than that of the floor of the building.**~~

~~**B. Substrate below pavement or slab must have a vertical soil capacity of 1,500 pounds per square foot, and covered with 6 mil vapor barrier. Concrete slab should be poured 4" thick with 12" turndown footing on all sides, using 3,000 PSI concrete, and reinforced with W4 x W4 – 4" x 4" wire mesh.**~~

~~**C. Pad or slab should be level to 1/8" in all directions.**~~

~~**D. Provide positive drainage for the pad or slab as required.**~~

~~***** Site Preparation 3.02 must be followed for all Pump House and Expanded Pre-assembled Buildings.**~~

3.03 ACCESS

A. Purchaser must provide level unobstructed area large enough for crane and tractor trailer to park adjacent to pad. Crane must be able to place outriggers within 3'-0" of edge of pad and truck and crane must be able to get side-by-side under their own power. No overhead lines may be within 75' radius of center of pad. Firm roadbed with turns that allow 65' lowbed tractor and trailer must be provided directly to site. No building shall be placed closer than 2'-0" to an existing structure.

ENCLOSURE DRAWINGS

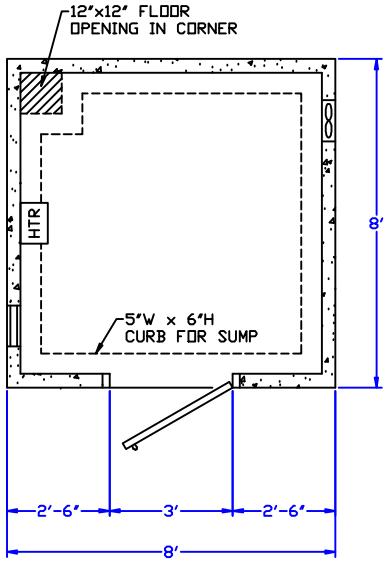

FLOOR PLAN

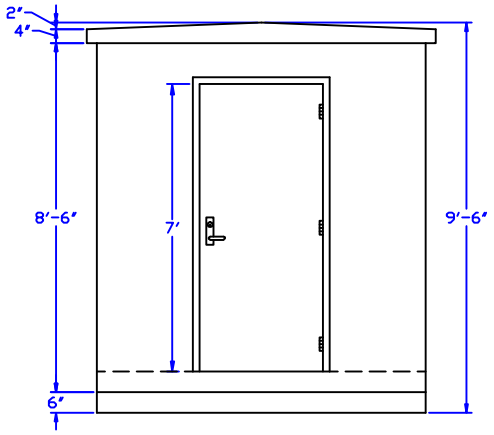

FRONT VIEW

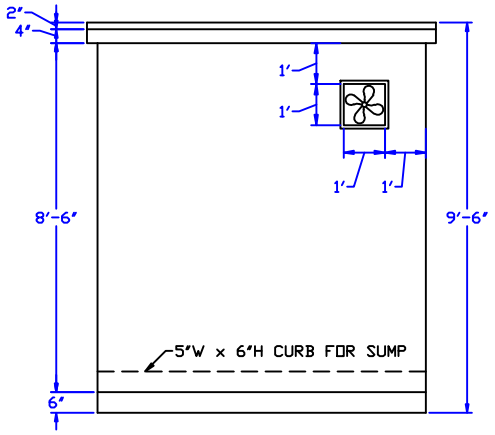

RIGHT VIEW

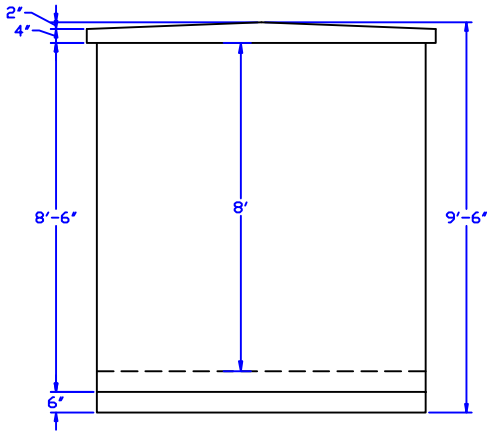

REAR VIEW

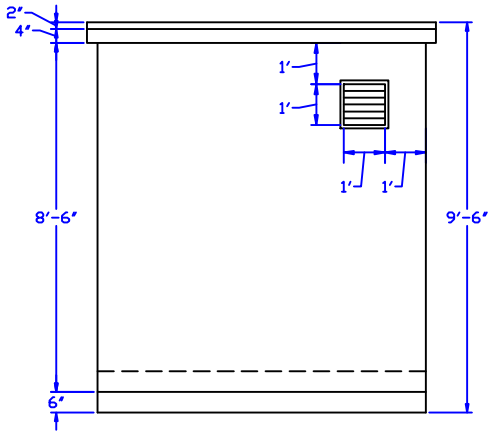

LEFT VIEW

NOTES:
ELECTRICAL NOT SHOWN FOR CLARITY.
PLEASE SEE ELECTRICAL DRAWING FOR LAYOUT.
ALARM LIGHT SHIPPED LOOSE TO BE INSTALLED BY OTHERS.

AES PRECAST CO., INC.	
3851 17TH STREET, NORTHPORT, AL 35476 1-800-342-3274	
JOB LOCATION: ANNISTON, AL	
DRAWN BY: MBW	MODEL: AES-88-ST
DATE: 10-29-2015	DWG NO: 1 of 1

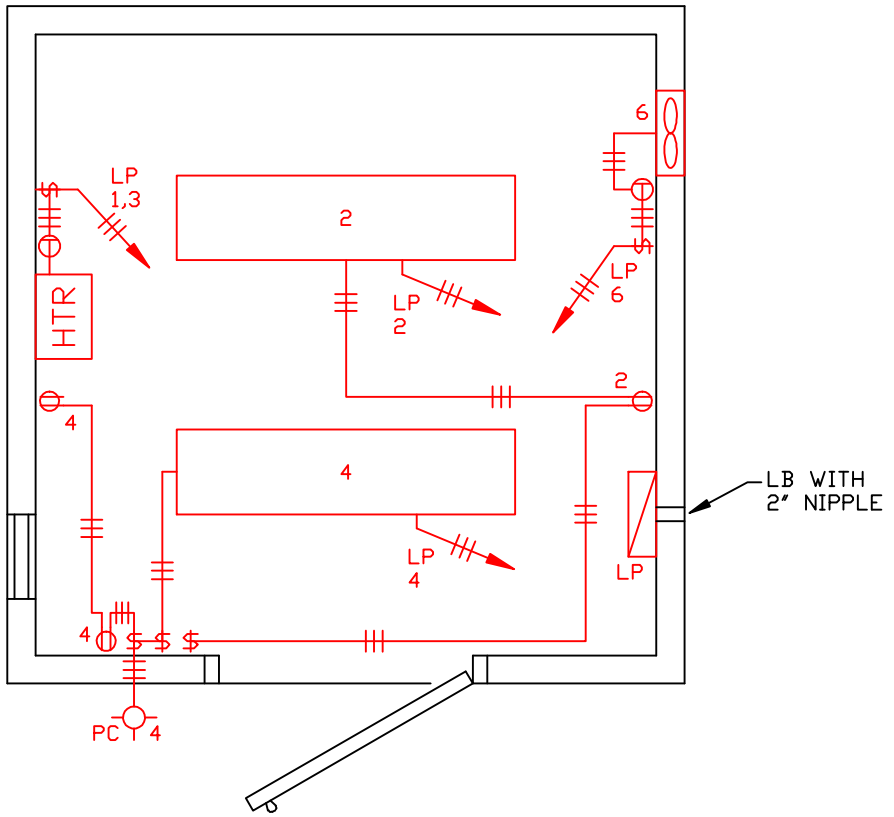

ELECTRICAL PLAN

Panel "LP"

150A Main Breaker
120/240V 1ø NEMA 3R

Main Breaker	2 x 150A	-			
Heater	2 x 20A	1	2	1 x 20A	Light 1, Receps
		3	4	1 x 20A	Light 2, Receps
Spare	1 x 20A	5	6	1 x 20A	Exhaust Fan
Blank	--	7	8	--	Blank
Blank	--	9	10	--	Blank
Blank	--	11	12	--	Blank
Blank	--	13	14	--	Blank
Blank	--	15	16	--	Blank
		|	|		
Blank	--	29	30	--	Blank

AES PRECAST CO., INC.
3851 17TH STREET, NORTHPORT, AL 35476 1-800-342-3274

JOB LOCATION:	ANNISTON, AL
DRAWN BY: MBW	MODEL: AES-88-ST
DATE: 10-29-2015	DWG NO: 1 of 1

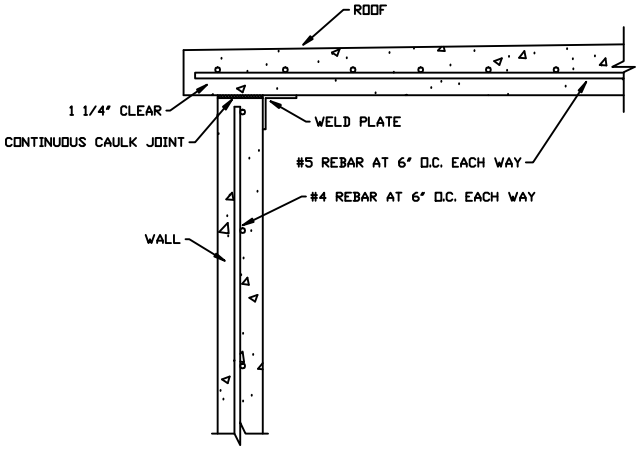

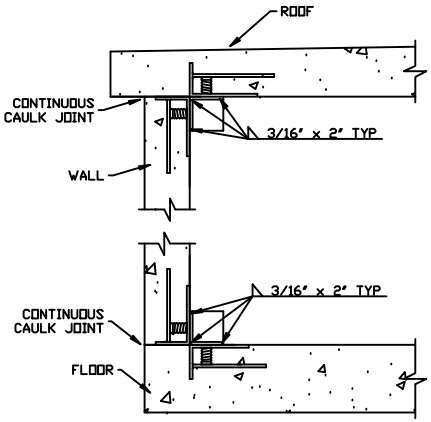

WALL / FLOOR &
WALL / ROOF
CONNECTIONS

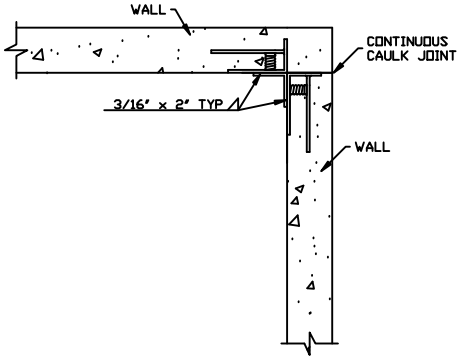

WALL / WALL
CONNECTION

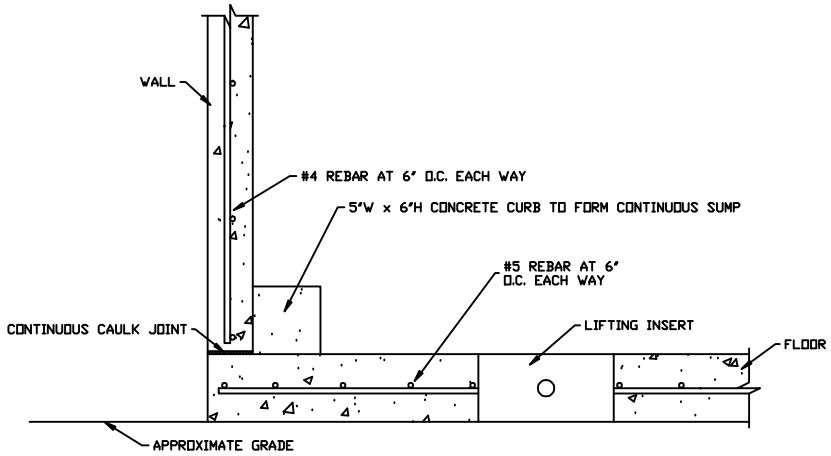

REBAR SECTION

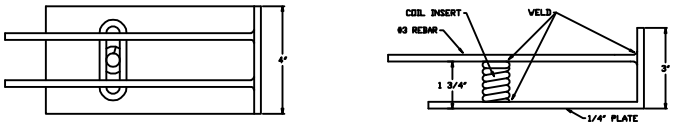

EMBEDED PLATE / INSERT DETAIL

AES PRECAST CO., INC.	
3851 17TH STREET, NORTHPORT, AL 35476 1-800-342-3274	
JOB LOCATION:	--
DRAWN BY: MBW	MODEL: --
DATE: 10-29-2015	DWG NO: 1 of 1

ENCLOSURE DOOR AND HARDWARE

1-3/4" VERSADOOR (VU)

POLYURETHANE FOAM CORE
FLUSH AND EMBOSSED PANEL STEEL DOORS, NON-HANDED

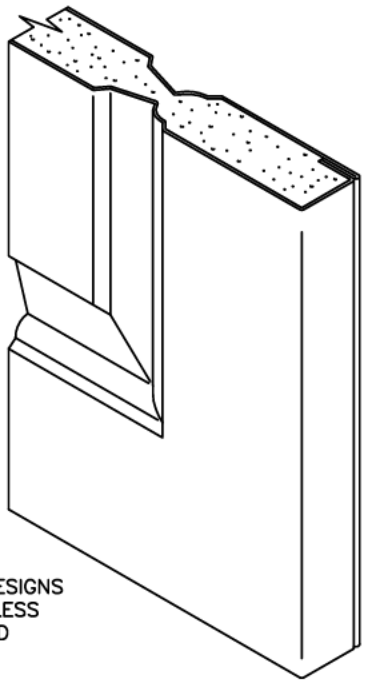

FLUSH DESIGNS SIMILAR LESS EMBOSSED PANEL

Full Flush or Seamless Style ...

Foamed-in-Place Polyurethane core fills entire door cavity. Core is chemically bonded to all interior surfaces. High impact resistance. Excellent Insulation Characteristics.

Suggested Use:

- ***Interior or Exterior ...***
- ***Motels/Hotels***
- ***Office Buildings***
- ***Health Care***
- ***Institutional***
- ***Sports/Recreational***
- ***Retail***
- ***Food Processing***

FLUSH DESIGNS

* NARROW LITE TRIM KITS ARE AVAILABLE IN 6" AND 8" WIDTHS AND 36" TO 60" HEIGHTS IN 4" INCREMENTS.

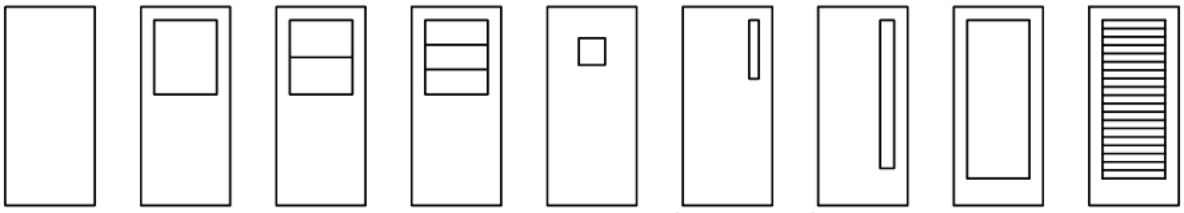

F G G2 G3 V * N___ * N___ FG LF

EMBOSSED PANEL DESIGNS

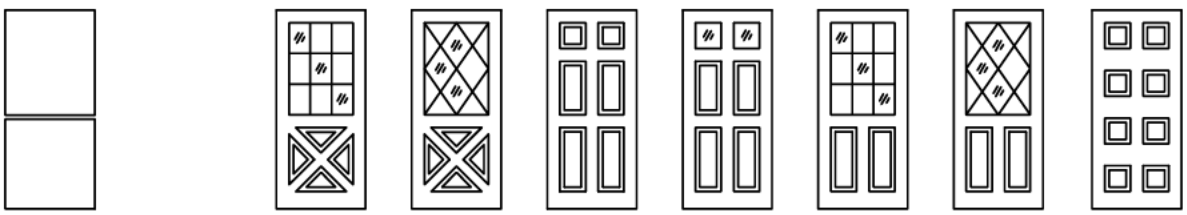

DUTCH EC05 EC10 E601 E609 E605 E612 E801

D4-4

STANDARD SIZES
NOMINAL DOOR OPENING

WIDTH		HEIGHT
SINGLE	DOUBLE	
2'–0"	4'–0"	6'–8"
2'–4"	4'–8"	7'–0"
2'–6"	5'–0"	7'–2"
2'–8"	5'–4"	7'–10"
2'–10"	5'–8"	8'–0"
3'–0"	6'–0"	9'–0"
3'–4"	6'–8"	
3'–6"	7'–0"	
3'–8"	7'–4"	
3'–10"	7'–8"	
4'–0"	8'–0"	

SIZE LIMITS – DESIGNS

	FLUSH DESIGN	6 PANEL	8 PANEL	CROSS BUCK & LITES
MAX.	4090	4070	3070	3070
MIN.	2068	2668	2868	2868

E6 and E8 designs: mortise lock preparation limited to 3'–0" width, minimum.

FIRE DOORS

LABELING AGENCIES: WARNOCK HERSEY AND UNDERWRITERS LABORATORIES

TEST: UL10C, UL10B, UBC 43–2

- DESIGNS: F, G, N, V, E6, OR E8
- RATING: (20 GAGE) 3/4 HR, OR 1–1/2 HR.
  MAX. SIZE: 40 x 80 SINGLE
  80 x 80 PAIR
- RATING: (18 & 16 GAGE) 3/4 HR, 1–1/2 HR. OR 3 HR.
  MAX. SIZE: 40 x 90 SINGLE
  80 x 90 PAIR

PRODUCT SPECIFICATIONS:

1-3/4" Thick steel doors shall be as manufactured by Ceco Door Products, Milan, TN USA. Doors shall conform to the Steel Door Institute guide specification, ANSI A250.8-1998; see chart below for performance classifications.

VERSADOORS are made full-flush or (optional) seamless style. Faces sheets are commercial quality cold rolled steel conforming to ASTM A366 or A620 & A568 ...or (optional) hot-dipped galvanized steel conforming to ASTM A924 and A653 -- see chart below.

Versadoor full-flush doors have mechanically interlocked, hemmed, hairline seams on vertical edges and have no visible seams on faces (S.D.I. Design 1). Doors specified "seamless" have no visible seams on faces or vertical edges (S.D.I. Design II). Face sheets are totally supported by a foamed-in-place polyurethane core. The core fills the entire door cavity and is chemically bonded to all interior surfaces. Density of foam exceeds 1.8 pcf and it has a crush strength of 3600 psf. The top and bottom door edges are closed with 16 gage steel channels welded in place.

Hardware Provisions: Hinge preparations are non-handed. Hinge edges are mortised for 4-1/2" high, standard and heavy weight hinges. 7 gage steel hinge reinforcements are welded inside the door edge and are drilled and tapped for fasteners in accordance with ANSI A156.7. Hinge closing plates are included. The lock edge is square and is prepared for Gov. series 86 or 160/161 locks in accordance with ANSI A115 (specify which). Optional closer reinforcement is a 12 gage steel channel.

Paint: 1-3/4" steel doors shall be provided with one coat of oven-cured neutral color primer paint. Primer coat shall conform with ANSI A250.10. The primer coat is a preparatory base for necessary finish painting. "Colorstyle" finish coat is also available from a selection of standard colors (optional). Colorstyle finish is electrostatically applied, oven-cured urethane enamel. For accurate color selectors ask for a Ceco Colorstyle chart.

MATERIAL

DOOR FACE SHEETS	GRADE	C.R.	GALV		RECOMMENDED DOOR FRAME MATERIAL
			A60	G90	
20 Gage Steel (4080 max.)	Standard Duty	STD	OPT	–	16 Gage Steel
18 Gage Steel	Heavy Duty	STD	OPT	OPT	16 Gage Steel
16 Gage Steel	Extra heavy Duty	STD	OPT	OPT	16 or 14 Gage Steel

PERFORMANCE

Core Thermal Characteristics:	U Factor: 0.067 R Factor: 14.97
Sound Transmission Class:	STC 26 (F Design, 18 Gage Face Sheets, ASTM E90–81 & E413–73 [Fully Operable])
Physical Endurance Level:	Meets ANSI A 151.1 Performance Test, 20 GAGE: Level B (500,000 Cycles); 18 and 16 Gage: Level A (1,000,000 Cycles)

09/08/03

SERIES SQ, SR, AND SC STEEL FRAMES

FOR 1-3/4" DOORS
STANDARD WALL APPLICATION, HANDED

* BASIC PROFILES

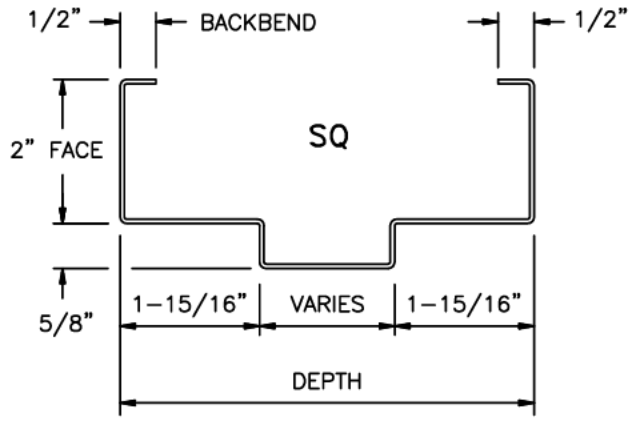

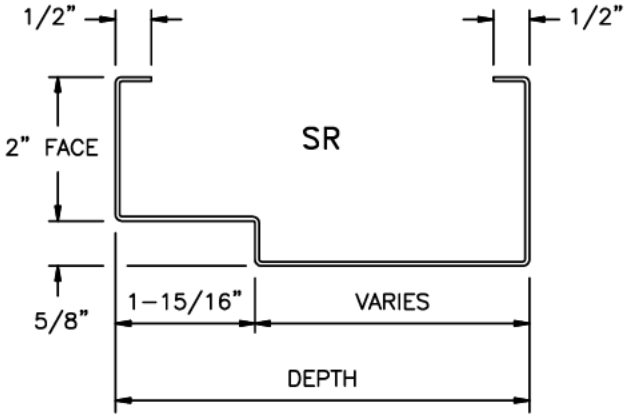

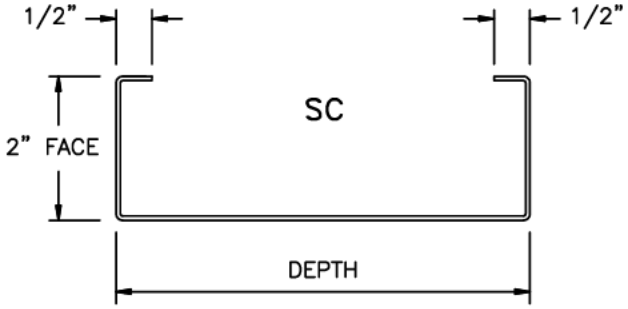

* Depth, face, soffit, and backbend dimensions are variable (made to order) within limits of material and tooling. Hardware preparations are for 1–3/4" thick doors. Rabbet dimensions and hardware preparations to suit other door thicknesses are also available. Backbends need not be the same on opposite faces of basic profile, but limits of material and/or tooling may restrict certain combinations of backbends and other profile variations. Profiles are not limited to those shown ...many other designs and combinations are available.

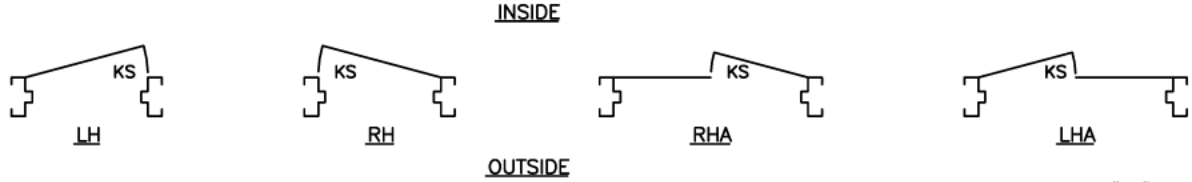

"KS" = KEY SIDE

TECH-DATA

SERIES SQ, SR, AND SC STEEL FRAMES

STANDARD SIZES NOMINAL DOOR OPENING

WIDTH		HEIGHT
SINGLE	DOUBLE	
2'–0"	4'–0"	
2'–4"	4'–8"	
2'–6"	5'–0"	6'–8"
2'–8"	5'–4"	7'–0"
2'–10"	5'–8"	7'–2"
3'–0"	6'–0"	7'–10"
3'–4"	6'–8"	8'–0"
3'–6"	7'–0"	9'–0"
3'–8"	7'–4"	
3'–10"	7'–8"	
4'–0"	8'–0"	

FIRE DOOR FRAMES

LABELING AGENCIES:

- UNDERWRITERS LABORATORY
- WARNOCK HERSEY
- FACTORY MUTUAL

TEST: ASTM E–152, UL10B, UBC 43–2

- RATING: 20 MIN, 3/4 HR, 1 HR, 1–1/2 HR, OR 3 HR
- MAX. SIZE: 40 x 90 SINGLE 80 x 90 PAIR

Not all ratings are available in all sizes, elevations, and materials.
Hourly ratings are not shown on label unless rating is less than 3 hours.

PRODUCT SPECIFICATIONS:

Steel door frames shall be as manufactured by Ceco Door Products, Milan, TN or Oklahoma City, OK, USA. They shall conform to the Steel Door Institute guide specification, ANSI A250.8-1998. See chart below for performance classifications.

Series SQ, SR, and SC frames for 1-3/4" doors are formed from commercial quality cold rolled steel conforming to ASTM A366 or A620 & A568 ...or (optional) hot-dipped galvanized steel conforming to ASTM A924 and A653 - see chart below.

3 piece door frames are shipped knocked down or welded. Transoms, sidelites and borrowed lites are welded unit type with all exposed welds ground smooth. Oversize frames are shipped in multiple units for field splicing. Integral door stops are 5/8" high. Double rabbet (SQ), single rabbet (SR), or cased opening (SC) profiles are sized to suit wall applications. Elevations conform with approved Ceco shop drawings. Jamb anchors are available for new masonry, wood stud, metal stud or existing opening wall conditions (indicate which). Floor anchors or extra jamb anchors are provided to anchor sill.

Hardware Provisions: Frames are handed. Hinge jambs are mortised for 4-1/2" or 5" high, standard or heavy weight hinges (specify which). 7 gage steel reinforcements are welded in place and are drilled and tapped for fasteners in accordance with ANSI A156.7. The strike jamb is prepared for 4-7/8" universal strike in accordance with ANSI A 115.1 & 2. Plaster guards are 26 gage steel. Preparations for various other mechanical and electronic locks and strikes are also available. Optional hardware reinforcement (e.g. closer/holder) is 12 gage steel welded in place (designate hardware). 3 door mutes are provided per strike jamb and 2 for double swing heads.

Paint: Steel door frames are provided with one coat of oven-cured neutral color primer paint. Primer coat shall conform with ANSI A250.10 . The primer coat is a preparatory base for necessary finish painting.

MATERIAL

DOOR FRAME MATERIAL	GRADE	C.R.	GALV	
			A60	G90
16 Gage Steel	Heavy Duty	STD	OPT	OPT
14 Gage Steel	Extra heavy Duty	STD	OPT	OPT

PERFORMANCE

Physical Endurance Level:	Meets S.D.I. 119 Performance Test, Level A (1,000,000 Cycles)

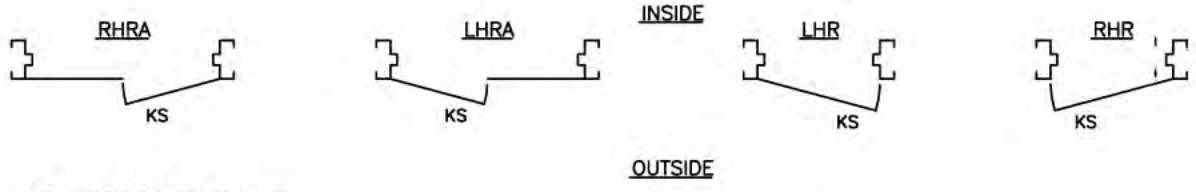

"SUFFIX"A" = ACTIVE LEAF OF PAIRS

Ceco Door Products

McKINNEY
1-800-346-7707
www.mckinneyhinge.com

TA2314

Stainless steel base or available in brass or bronze base material polished and plated or furnished in prime or powder coat.

TA2714

Steel base polished and plated or furnished in prime or powder coat finish.



Available Options:

- NRP (non-removable pin)
  TB (ball bearing)
- TCA (concealed bearing)
- RC (round corner - ¼" radius furnished unless specified otherwise)
- HT (hospital tip)
- BT (ball tip)
- ST (steeple tip)
- SSF (safety stud feature)
- QC (quick connect hinge) 2, 4, 6, 8, 10 or 12 wire available
- CC (concealed circuit) 4, 6 or 8 wire available*
- CS- (concealed switch - handing required)*
- MM (magnetic monitoring)
- "S" (sheradizing, our additional rust resistant base under prime coat on steel base)
- Slip In (Type 1 or Type 2)
- Beveled Edge (where doors are beveled on hinge side specify TA4314 or TA4714)

* Not available in Stainless

APPLICATION

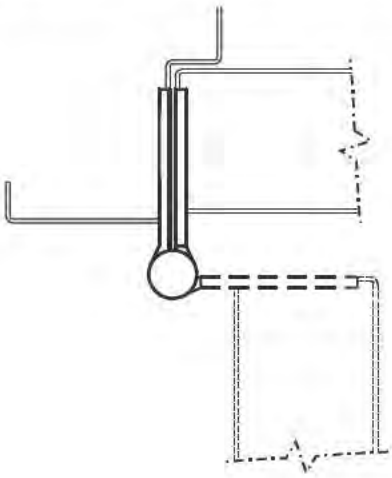

Available Sizes

Inches	MM	Gauge
3½ x 3½	88.9 x 88.9	.123
4 x 4	101.6 x 101.6	.130
4½ x 4	114.3 x 101.6	.134
4½ x 4½	114.3 x 114.3	.134
5 x 4½	127 x 114.3	.146
5 x 5	127 x 127	.146
6 x 6*	152.4 x 152.4	.160

*Not available in Stainless

Packing:

All standard weight full mortise non-ferrous hinges are packed with all machine x 1/2 wood screws. Steel hinges (except USP) are packed all machine x all wood screws. For special screws consult price book on availability.

ANSI Cross Reference:

A2112 Brass, Bronze
A5112 Stainless
A8112 Steel

Recommended for standard weight, medium frequency doors, or doors with closing devices.

FACTS AND FIGURES

8700/SL8700 SERIES

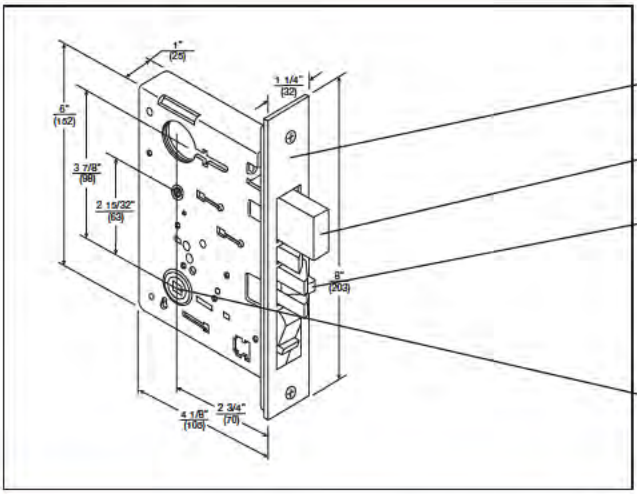

ANSI Conformance - ANSI A 156.13, Series 1000, Operational Grade 1. (SL8700 meets Security Grade 1.)

Armor Front - 8" x 1-1/4"

Door Thickness - 1-3/4" standard, to 3-1/4" thick doors to order.

Deadbolt - 1" throw, stainless steel with two enclosed hardened-steel roller armor pins.

Latchbolt - 3/4" throw, stainless steel two-piece anti-friction camming action.

UL Listed - for application on labeled fire doors.

Backset - 2-3/4" only.

Case - wrought steel, zinc dichromated.

Hubs - sintered steel, copper infiltrated for additional strength.
Knobs: 5/16" standard, 3/8" to order.
Levers: 3/8" standard.
(SL8700 - available in levers only.)

SECTIONAL LEVER INSTALLATION

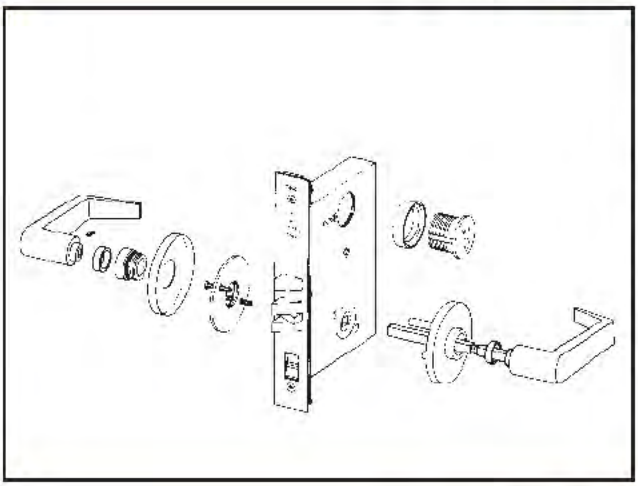

- All Yale® 8700 Series sectional lever trims feature through-bolted installation. This ensures positive alignment of the trim with the lock case and offers an attractive appearance.
- Outside trim is held in place by threaded posts. The posts fit through holes in the lock case and are secured by through-bolts from the inside trim.
- It is possible to install split trim, i.e. knob outside and lever inside, or vice versa.
- Since self-aligning trim is easy to install, on-the-job labor costs may be reduced.
- Each mortise lock ordered with lever trim features an internal heavy-duty spring cartridge which prevents lever sag.
- All *Yale* mortise lock trims are UL listed for fire door applications.
- A variety of sectional lever designs are available as shown on pages 6-8.

ESCUTCHEON LEVER INSTALLATION

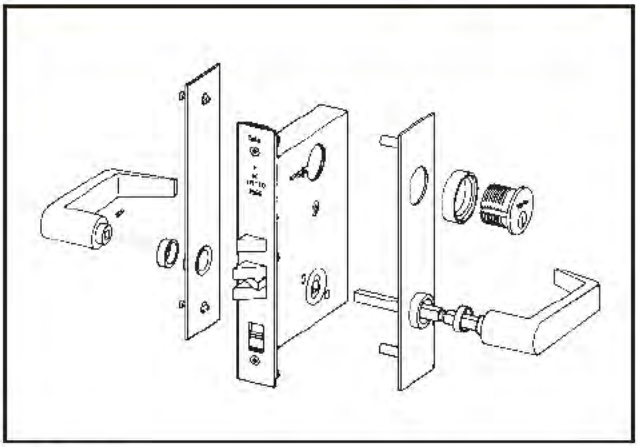

- All *Yale* 8700 Series escutcheon lever trims feature through-bolted installation.
- Outside trim is held in place by threaded posts. The posts fit through the door and are secured by through-bolts from the inside trim.
- *Yale* outside escutcheon trims have no visible screws – a great deterrent to vandalism.
- It is poss ble to install split trim, i.e. knob outside and lever inside, or vice versa.
- Each mortise lock ordered with lever trim features an internal heavy-duty spring cartridge which prevents lever sag.
- All *Yale* mortise lock trims are UL listed for fire door applications.
- A variety of escutcheon lever designs are available as shown on pages 6-8.

FUNCTIONS

KNOB OR LEVER TRIMS

SquareBolt® 7150(F) 7250M(F) 7250 Inside	SquareBolt® 7150(F) 7250M(F) 7250 Outside	Rim 7100(F) 7200M(F) 7200 Inside	Rim 7100(F) 7200M(F) 7200 Outside	Surface Vertical Rod 7110(F) 7170(F90) 7210M(F) 7210 Inside	Surface Vertical Rod 7110(F) 7170(F90) 7210M(F) 7210 Outside	Concealed Vertical Rod 7120(F) 7160(F90) 7220M(F) 7220 Inside	Concealed Vertical Rod 7120(F) 7160(F90) 7220M(F) 7220 Outside	Mortise 7130(F) Inside	Mortise 7130(F) Outside	Type	ANSI Function No.	Function Description
										Exit Only/ Blank Plate	01 –	Exit only, no trim. Exit only, blank plate.
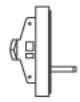				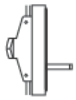		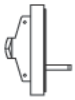		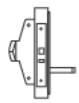		Dummy	02	Entrance by trim when actuating bar is locked down.
										Nightlatch	03	Entrance by trim when latchbolt is retracted by key. Key removable only when locked.
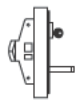				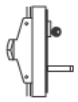		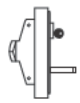		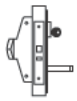		Classroom	08	Entrance by knob or lever. Key locks or unlocks knob or lever.
				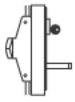				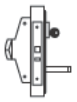		Storeroom	09	Entrance by knob or lever only when released by key. Key removable only when locked.
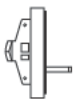				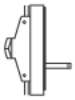		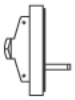		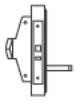		Passage	14	Entrance by trim when latchbolt is released by knob or lever. Knob or lever always active, no cylinder.

Note: 09 and Free-Wheeling 02 achieved with a single modification at installation.

DOUBLE CYLINDER EXIT DEVICE LEVER TRIMS

SquareBolt® 7150(F)-2 Inside	SquareBolt® 7150(F)-2 Outside	Rim 7100(F)-2 Inside	Rim 7100(F)-2 Outside	Mortise 7130(F)-2 Inside	Mortise 7130(F)-2 Outside	Type	ANSI Function No.	Function Description
						Classroom	08	Entrance by lever. Key either side locks or unlocks lever.

7130(F) MORTISE

The 7130(F) is an exit device integrated with the Yale® 8700 Series Mortise Lock for use on single doors or active leaf of a pair of doors where life safety and extra security are required. The 8700 Series Mortise Lock used is modified for use with the exit device only. The standard 8700 mortise lock cannot be used.

CERTIFICATION/COMPLIANCE

UL/cUL Listed: FVSR/FVSR7 - Panic hardware
GXHX/GXHX7 - Fire exit hardware (F)
(4' x 8' single, 8' x 8' pairs, 3 hr.)
(4' x 9' single, 8' x 9' pairs, 1-1/2 hr.)

ANSI Certified: A156.3 Type 3, Grade 1

BHMA Listed: Directory of Certified Products

FEATURES

- Designed for wide stile and flush doors
- Handed; specify hand
- Two-piece mechanical 3/4" throw deadlocking stainless steel latchbolt
- Easily disassembles for maintenance and service
- Available in double cylinder function

APPLICATIONS

- Single swing doors
- Pairs of doors with vertical rod devices or automatic flush bolts
- Metal, wood or compatible door materials



Order As Follows, According To Function.	
7130-K5(F)	(01) Exit only
	(02) Entry by pull or rigid knob when dogged.
	(03) Key retracts latchbolt
	Electrical control for 552F and 652F knob trim, w/wo key override.
7130-L5(F)	(02) Entry by rigid lever when dogged.
	(03) Key retracts latchbolt.
	Electrical control for 556F and 652F lever trim, w/wo key override.
7130-T5(F)	(02) Entry by pull when dogged. (03) Key retracts latchbolt.
7130-K8(F)	(08) Entry by knob lock/unlocked by key or knob only (passage)
7130-L8(F)	(08) Entry by lever lock/unlocked by key or lever only (passage)
7130-L8(F)-2	(08) Entry by lever lock/unlocked by key either side or lever only (passage)
7130-T8(F)	(05) Entry by thumbpiece lock/unlocked by key or thumbpiece only (passage)

SPECIFICATIONS

Door Opening Width:	-36 for 30" - 36" (762 - 914mm) doors -48 for 36-1/2" - 48" (927 - 1219mm) doors Optional sizes can be special ordered. Consult Technical Product Support.
Door Thickness:	1-3/4" (44mm) standard. 2" and 2-1/4" (51mm and 57mm) optional; specify when ordering.
Minimum Stile Width:	4-1/2" (114mm)
Projection:	3-1/4" (83mm) active, 2-3/4" (70mm) dogged
Latchbolt:	Two piece mechanical 3/4" (19mm) deadlocking stainless steel with anti-friction insert and auxiliary deadlocking latch
Strike:	Curved lip, non-handed 798. Optional 712 for door pairs with astragals. Optional 718 open back strike.
Fasteners:	Machine screws and wood door fasteners standard for panic hardware. Sex nuts and bolts supplied standard for fire exit hardware.
Trims:	650F Series heavy-duty trim (recommended), 550F utility trim, 560F cylinder x pull/thumbpiece trim. See pages 15-17.
Electric Strikes:	Compatible with Folger Adam® 300, 500, 600, 700 Series strikes (consult factory for specific model).
Options:	Cylinder dogging, Shim Kit # 723, Sex Nuts and Bolts.
Warranty:	5-year limited.

7100 SERIES EXIT DEVICE TRIM

620F/650F SERIES HEAVY-DUTY TRIM

Yale's heavy-duty exit device trim features vandal resistant Free-Wheeling trim to be used for high-frequency applications or on doors subject to abuse. Free-Wheeling is not available on mortise trim.

- Trim through-bolts to exit device for strength.
- Beveled sides improve attack resistance.
- Solid forged escutcheon resists vandalism and abuse.
- Flush cylinder in 6-pin applications for additional security.
- 1-3/4" (44mm) door standard. For doors through. 2-1/4" (57mm) or shim-mounted devices, specify on order.
- Dimensions: 3' x 10-1/4" x 13/16" (76mm x 260mm x 19mm).
- See page 44 for cylinder options. 1-1/2" mortise cylinder required for mortise trim.
- Available with AR, AU, CR, JN, MO, PB, PN, VI lever designs. See page 17.
- Trim ordering example: AU626F x 626 x RHR.
- 5-year limited warranty.




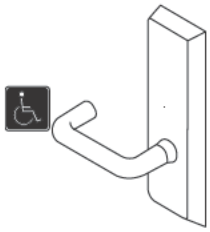


Application	Cylinder	Exit Only Blank Plate	Nightlatch	Dummy Trim Rigid Lever	Dummy Trim Free-Wheeling	Passage	Classroom	Storeroom	Nightlatch
7100(F) 7150(F) 7110(F) 7120(F) 7160(F) 7170(F)	Rim	620F	621F**	629F	628F*	628F	626F	626F*	627F
7130(F)	Mortise	620F	651F**	658F	–	658F	656F	–	656F
7100(F)-2 7150(F)-2	Rim x Rim	–	–	–	–	–	626F	–	–
7130(F)	Mortise x Rim	–	–	–	–	–	656F	–	–
ANSI		–	03	02	02	14	08	09	03

*09 and Free-Wheeling 02 achieved with single trim modification at installation.
**Not recommended for use with surface or concealed vertical rod devices.

121 CYLINDER ONLY NIGHTLATCH TRIM

- Application: 7100(F) and 7150(F) exit devices. Not recommended for surface or concealed vertical rod devices.
- Must specify rim cylinder when ordering. See page 44 for cylinder options.

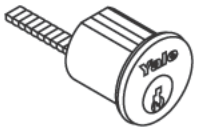

Function Description	Nightlatch Access by Key
Model No.	121
ANSI	03

Panic Type Threshold

8-1-99

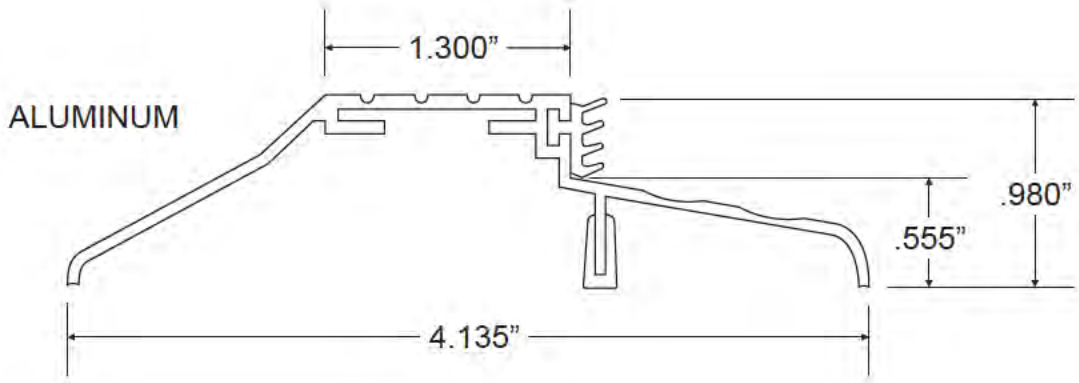

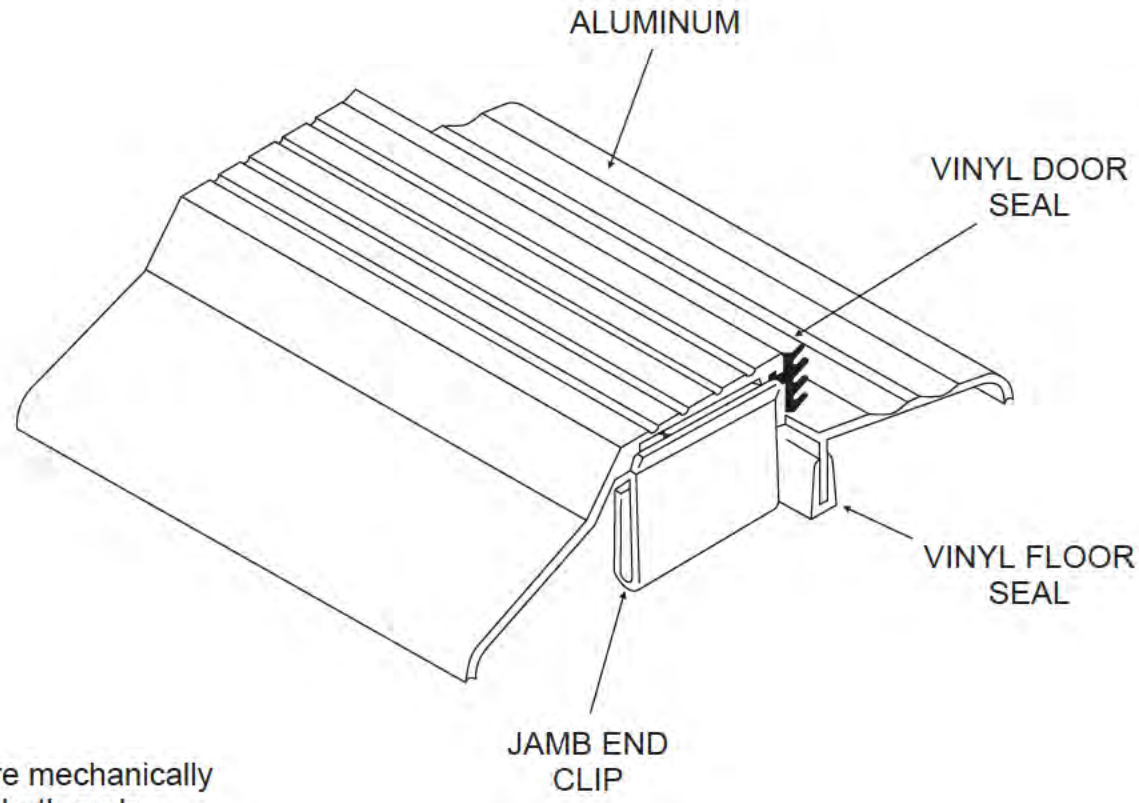

End clips are mechanically fastened to both ends of threshold

1938A/30 (36 or 60) Aluminum Threshold

Cutaway of closer body

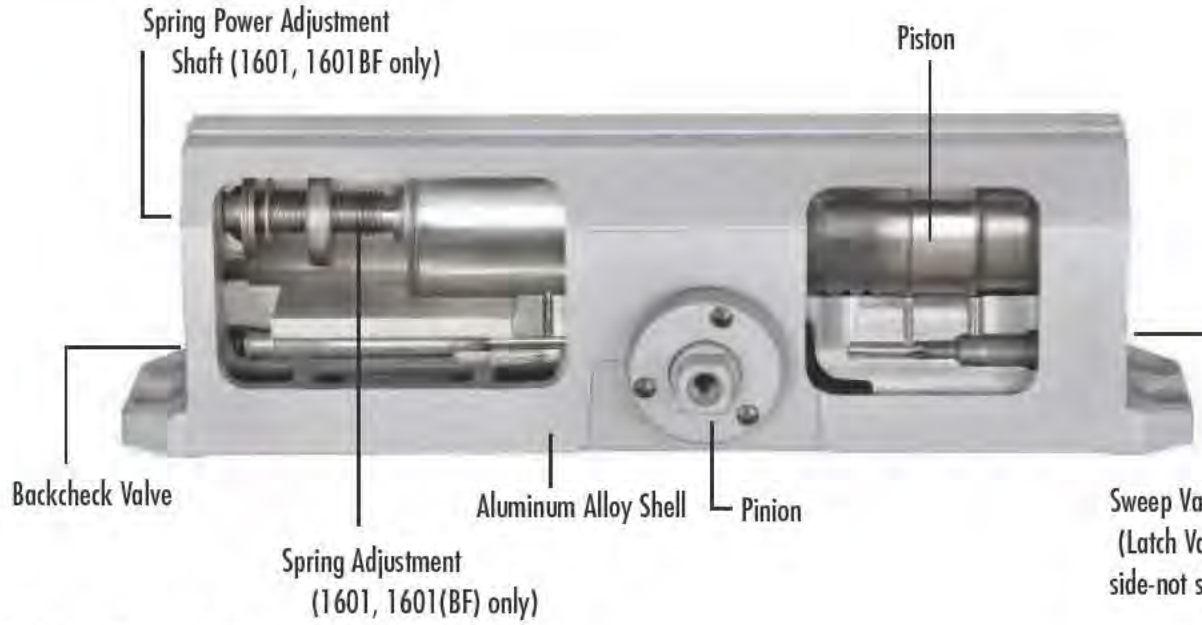

Spring omitted for illustration purposes

Compliance Standards

The series 1601BF door closers are designed to comply with requirements of the Americans with Disabilities Act (A.D.A.) and ANSI standard A117.1. All series 1600BC/1601(BF) comply with ANSI A156.4 Grade 1 Specification. (UL) All *Norton* series 1600BC/1601(BF) closers with non-hold open arms are listed by Underwriters` Laboratories for labeled fire doors. This includes compliance to UL10C and UBC-72 (1997) for 3-hour assemblies. These products are manufactured in a certified ISO 9001 facility. These closers are also listed by California State Fire Marshal and New York City Materials and Equipment Acceptance Division.

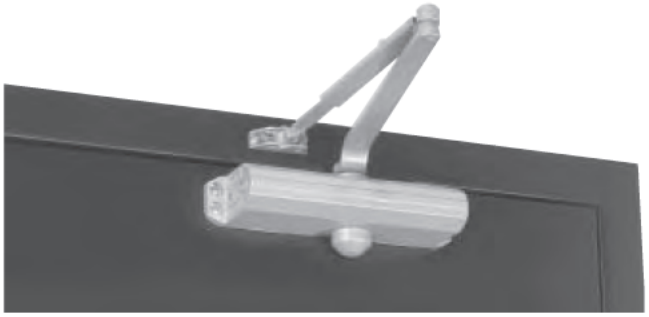

*Non-hold open arm shown.

Regular Arm

This is the only pull-side application where a double lever arm is used. It is the most power-efficient application for a door closer. Sufficient frame, door and/or ceiling clearance must be considered.

Since the arm assembly projects directly out from the frame, this application may present an aesthetics issue or be prone to vandalism.

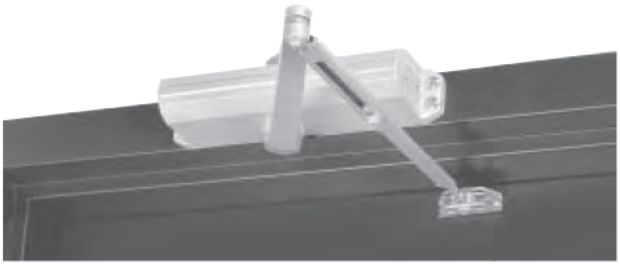

*Non-hold open arm shown.

Top Jamb

For efficiency reasons this application provides the best alternative to the regular arm application. There must be sufficient frame face and/or ceiling clearance for this application. It requires a top rail on the door of just 2-1/8" (54mm). This application provides the best door control for doors in exterior walls that swing out of a building.

The entire door closer and arm assembly project from the frame, similar to the regular arm application, where the matters of appearance and malicious abuse can be of concern.

Consideration must be given to depth of the frame reveal.

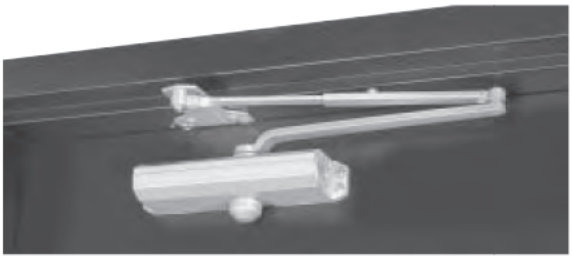

*Non-hold open arm shown.

Parallel Arm

This application provides the most appealing design appearance for a surface-mounted door closer having a double lever arm. This may also be beneficial in vandalism-prone areas. It is on the push side of the door and the arm assembly extends almost parallel to the door. In the closed position, there is very little or no hardware projecting beyond the frame face in most situations.

Due to the geometry of the arm it is approximately 25% less power-efficient than a regular arm application.

The entire closer and arm assembly are mounted below the frame stop, requiring a top rail clearance on the door of between 5-3/8" (137mm), when using a low-profile arm (1680 series), to 6-3/8" (162mm), when using the hold open arm.

225650_GasketTxt.qxd 1/14/2004 2:18 PM Page 32

National Guard Products, Inc.
PROTECTION, INSIDE OUT

Toll Free Phone 1-800-647-7874
Toll Free Fax 1-800-255-7874

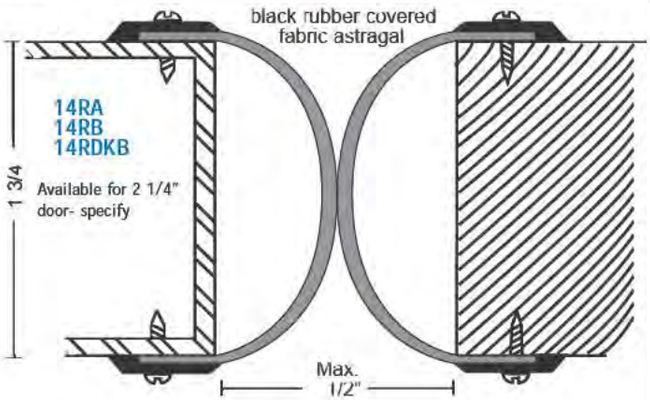

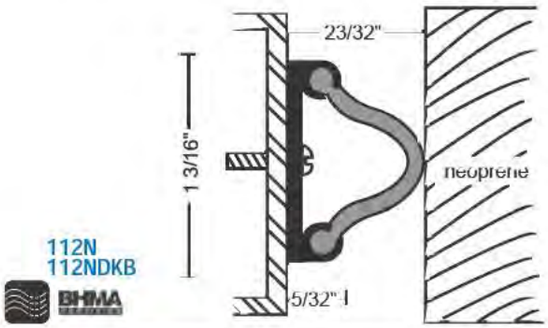

Drip Strips

#6 x 3/4" SMS furnished

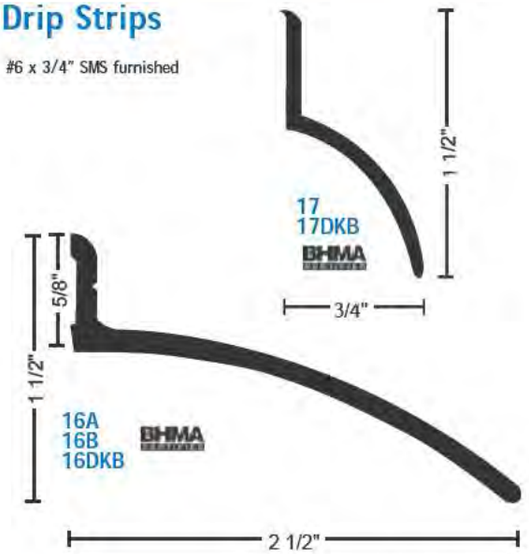

Overhead Door Bottom Seal

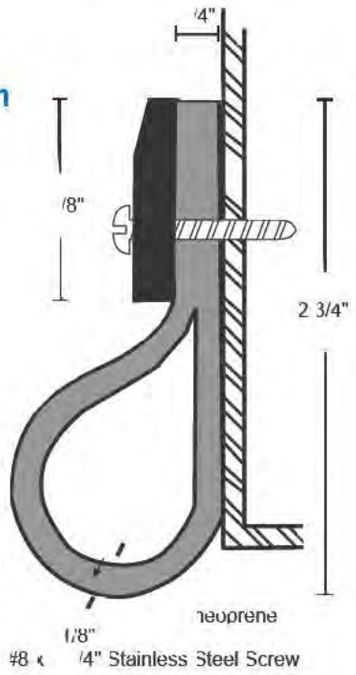

Security Astragal

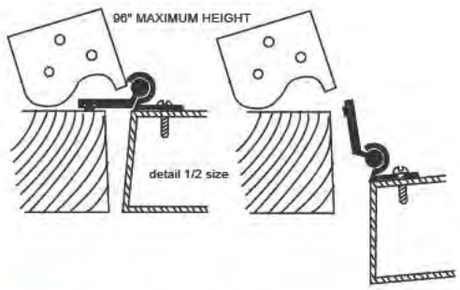

145PA
145PB
145PDKB

Spring loaded protection for pairs of outswinging doors up to 96" in height. Pile insert for weather protection, sturdy aluminum for pry bar protection.

Glass Door Astragal Seals

Our glass door seal consists of translucent PVC channel and nylon brush for an attractive solution to a difficult problem.

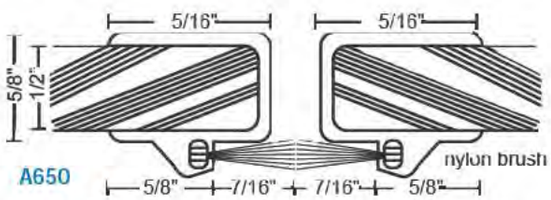

Order as **set** to receive two pieces

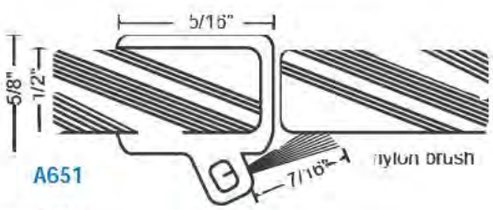

Maximum length120"

E-mail: ngpinfo@ngpinc.com
www.ngp.com

ENCLOSURE EXTERIOR FINISH

Sample of Exterior Finish:
Exposed Aggregate River Rock



ENCLOSURE ELECTRICAL

Detail Bill of Material

Project Name: AES
General Order No:
Negotiation No: H0091029X5K1
Alternate No: 0000

Item No.	Qty	Product	Description
	1	Panelboards	30Circuits, 225A, Fully Rated, 120/240V 1Ph 3W, Aluminum Bus, 10k AIC, 150A, ED Main Breaker[Top Fed], Surface Mounted

Catalog No P1C225BT30AH3R
Designation

Qty	List of Materials
1	150A, ED Main Breaker
4	20A, 1P BAB Branch Breaker
24	1P BAB Branch Provision Only
1	20A, 2P BAB Branch Breaker
1	Std. Bolted Al Ground Bar (Al/Cu Cable)
1	Panel Nameplate - White with Black Letters
1	Type 3R Enclosure: LWPQ2042

Eaton Selling Policy 25-000 applies.

All orders must be released for manufacture within 90 days of date of order entry. If approval drawings are required, drawings must be returned approved for release within 60 days of mailing. If drawings are not returned accordingly, and/or if shipment is delayed for any reason, the price of the order will increase by 1.0% per month or fraction there of for the time the shipment is delayed.

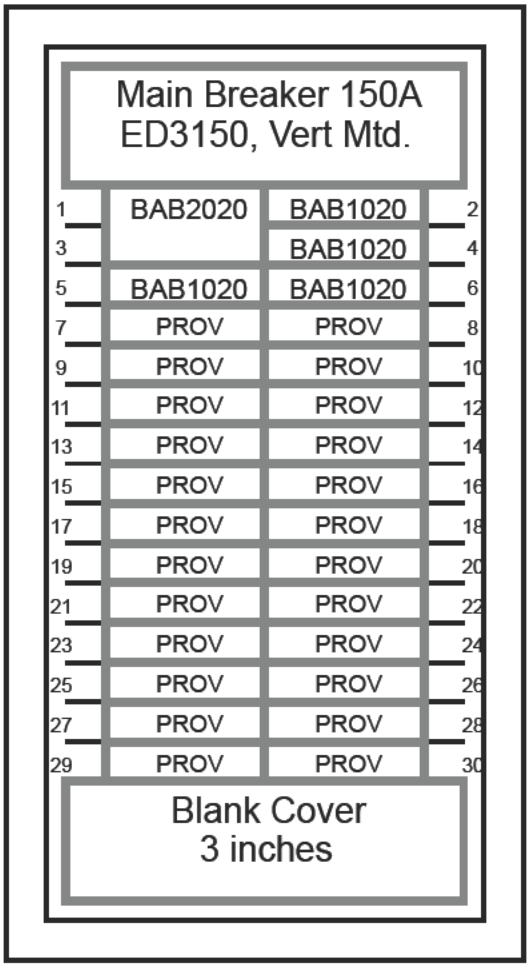

General Information **(Section 1 of 1)**

Service Voltage:	120/240V 1Ph 3W	**Enclosure:**	Type 3R
Bus Rating & Type:	225A Aluminum	**Neutral Rating:**	225A
Ground Bar:	Std. Bolted Aluminum, Al or Cu cable		
S.C. Rating:	10k A.I.C. Fully Rated		

Main Device Type: Main Breaker - Top Cable Entry - A & C Phase Connection
Main Terminals: Mechanical - (1) #14-4/0 (Cu/Al)
Neutral Terminals: Mechanical - (1) #6-300 kcmil (Cu/Al)
Box Catalog No.: LWPQ2042
Trim: Complete Enclosure (Includes Trim)

Surface Mounted

Box Dimensions: 42.00" [1066.8mm]H x 20.00" [508.0mm]W x 6.5" [165.1mm]D
Min. Gutter Size: Top = 5.5" [139.7mm] Bottom = 5.5" [139.7mm]
Left = 6.0" [152.4mm] Right = 6.0" [152.4mm]

Panel ID Nameplate: **(1)**
Type: Plastic, adhesive-backed **(2) 120/240V 1Ph 3W**
Color: White with Black Letters **(3)**

NEC Lighting & Appliance, UL CTL ***Non-Interchangeable Main Device***

Trim Lock: T-Handle Lock Assembly
Circuit Directory: Plastic Sleeve with Card
Painted Box: ANSI 61
Main Circuit Breaker Trip Type: Thermal-Magnetic.

Device Modifications:

Ref #	Description

Notes:

Branch Devices

Qty	Poles	Trip	Frame	Amps	kAIC
1	2	20	BAB	100	10
4	1	20	BAB	100	10
24	1		PROV		

Main Devices

Qty	Poles	Trip	Frame	Amps	kAIC
1	3	150	ED	225	10

The information on this document is created by Eaton Corporation. It is disclosed in confidence and it is only to be used for the purpose in which it is supplied.

PREPARED BY: RUSSELL WILLIAMS	DATE: 10/29/2015	Eaton			
APPROVED BY:	DATE:	JOB NAME: AES			
		DESIGNATION:			
	VERSION: 1.0 0.5	TYPE: PRL1a		DRAWING TYPE: Customer Approval	
NEG-ALT Number: H0091029X5K1-0000	REVISION: 0	DWG SIZE: A	G.O.:	ITEM:	SHEET: 1 of 1

LITHONIA LIGHTING®

Catalog Number	XWL232MV	
Notes		Type

Industrial Wet Location

FEATURES & SPECIFICATIONS

INTENDED USE

Designed for low to medium mounting heights. Ideal for applications where dirt, dust, humidity, moisture and cold temperatures are present. **Certain airborne contaminants can diminish integrity of acrylic.** Click here for Acrylic Environmental Compatibility table for suitable uses.

CONSTRUCTION

Rugged light gray polycarbonate housing with continuous poured gasket for an airtight seal, keeping out moisture, dust and humidity. Cold-rolled steel enclosed wireway included.

Provided with one open hole and knockout at opposite end.

OPTICS

UV stablized, impact-resistant, polycarbonate lens. Ten (10) snap-fit polycarbonate latches attach the lens to the housing for a tight seal.

ELECTRICAL SYSTEM

Standard electronic ballast (120-277V, 60Hz) ensures no flickering and quiet operation.

Starts instantly down to 0°F (-18°C) with two 32W linear T8 lamps and with two 54W linear T5HO lamps (lamps not included).

INSTALLATION

Two stainless steel mounting brackets included, which allow for flush or chain mounting (chain not included).

LISTINGS

UL listed to US and Canadian safety standards. UL listed for 25°C ambient and wet locations. IP65 rated.

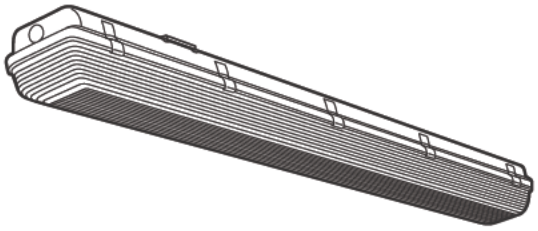

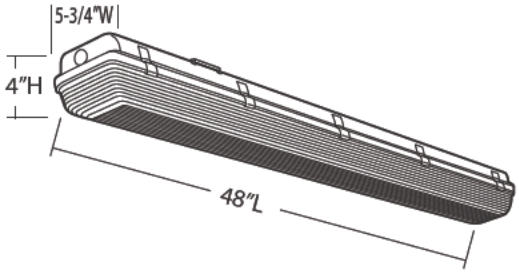

ORDERING INFORMATION

Catalog Number	UPC	Description	# of Lamps	Wattage	Voltage	Lamp Included	Pallet Qty.	Standard Carton Qty.
XWL232MV	745975639755	Enclosed industrial	2	32	120-277	N	63	1
XWL254MV	745976008697	Enclosed industrial	2	54	120-277	N	63	1

Industrial Wet Location

TEST NO: LTL16355
LUMINAIRE CATALOG NO.:XWL 2 32
LUMENS PER LAMP 2850

Coefficients of Utilization

pf	20%								
pc	80%			70%			50%		
pw	50%	30%	10%	50%	30%	10%	50%	30%	10%
RCR 1	69	65	62	67	63	60	63	60	57
2	59	53	48	57	52	47	53	49	45
3	51	44	39	49	43	38	46	41	37
4	45	38	32	43	37	32	41	35	30
5	40	33	27	38	32	27	36	30	26
10	24	19	15	24	18	14	23	18	14

Zonal Lumen Summary

Zone	Lumens	% Lamp	% Fixture
0° - 30°	754.0	13.2	18.5
0° - 40°	1258.5	22.1	30.8
0° - 60°	2366.6	41.5	58.0
0° - 90°	3711.0	65.1	90.9
90° - 180°	372.4	6.5	9.1
0° - 180°	4083.4	71.6	100.0

TEST NO: LTL18259
LUMINAIRE CATALOG NO.: XWL254 MV
LUMENS PER LAMP: 4450
Luminaire Efficiency: 70.3%

Coefficients of Utilization

pf	20%											
pc	80%				70%			50%				
pw	70%	50%	30%	10%	50%	30%	10%	50%	30%	10%		
RCR 0	83	83	83	83	80	80	80	76	76	76		
1	73	68	64	60	66	62	59	62	59	56		
2	65	58	52	47	56	50	46	52	48	44		
3	58	49	43	37	48	42	37	45	40	35		
4	53	43	36	31	42	35	30	39	34	29		
5	48	38	31	26	37	30	25	35	29	25		
6	44	34	27	22	33	27	22	31	26	21		
7	41	31	24	19	30	24	19	28	23	19		
8	38	28	21	17	27	21	17	26	20	16		
9	36	26	19	15	25	19	15	24	18	15		
10	33	23	18	14	23	17	14	22	17	13		

Zonal Lumen Summary

Zone	Lumens	% Lamp	% Fixture
0° - 30°	1121.8	12.6	17.9
0° - 40°	1852.5	20.8	29.6
0° - 60°	3572.1	40.1	57.1
0° - 90°	5869.2	65.9	93.8
90° - 180°	390.3	4.4	6.2
0° - 180°	6259.4	70.3	100.0

©2009-2010 Acuity Brands Lighting, Inc., All rights reserved, Rev. 1/26/10
Lithonia Lighting
Industrial
One Lithonia Way, Conyers, GA 30012
Phone: 770-922-9000 Fax: 770-981-8141
www.lithonia.com

Pass & Seymour

legrand®

Switches
Commercial Grade
15 & 20A, 120/277VAC

CS15AC1, CS15AC3, CS20AC1, CS20AC3

Commercial ruggedness in traditional side wire switches.

Like our other commercial switches, these reliable performers feature high-strength polycarbonate toggles, single-piece brass alloy contact arms, nylon covers and heavy-gauge steel straps to withstand hard use and ensure a long service life. Fast make and positive break action minimizes arcing.



Features & Benefits

One-piece plated steel strap for corrosion-resistance.

Heavy-duty bumpers for quiet, smooth operation.

Oversized silver-alloy contacts for long life and better heat dissipation.

Heavy-duty, brass alloy, one-piece contact arm virtually eliminates contact bounce.

Shallow design for easier installation.



CS20AC1-LA

Glass-reinforced nylon back body for durability and strength.

Cam control and spring actuator for positive "makes and breaks" with a minimum of arcing.

Locking support provides resistance to face and back body separation.

Side wire with #14 – #10 AWG copper or copper-clad wire.

Field Uses/Vertical Markets

- Retail
- Office
- Hospitality/Lodging
- Multiple Dwelling

Pass & Seymour

legrand®

Switches
Commercial Grade
15 & 20A, 120/277VAC

Ordering Information

Catalog Number		Rating		
Single Pole	Three-Way	A.	VAC	Color
Toggle Switches Side Wire				
CS15AC1-I	**CS15AC3-I**	15	120/277	Ivory
CS15AC1-W	**CS15AC3-W**	15	120/277	White
CS15AC1	**CS15AC3**	15	120/277	Brown
CS15AC1-GRY	**CS15AC3-GRY**	15	120/277	Gray
CS15AC1-LA	**CS15AC3-LA**	15	120/277	Light Almond
CS20AC1-I	**CS20AC3-I**	20	120/277	Ivory
CS20AC1-W	**CS20AC3-W**	20	120/277	White
CS20AC1	**CS20AC3**	20	120/277	Brown
CS20AC1-GRY	**CS20AC3-GRY**	20	120/277	Gray
CS20AC1-LA	**CS20AC3-LA**	20	120/277	Light Almond

For more information on these and other P&S products refer to our Catalog or visit our web site.

Switches
Commercial Grade
15 & 20A, 120/277VAC

Pass & Seymour

legrand®

Technical Specifications

3rd Party Compliance

UL Listed, File Number E140597, Standard UL20, General Use Snap Switches.
Federal Specification WS896.
cULus Listed, File Number LR17446, Standard CSA-C22.2 No. 111, General Use Snap Switches.
Conforms to NEMA WD-1 and WD-6.

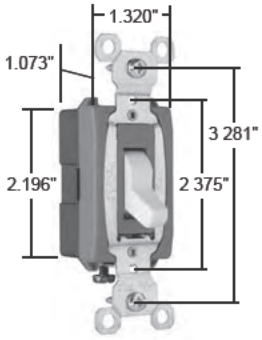

Dimensions for 15 & 20 Amp

Performance

Electrical	
Dielectric Withstand Voltage	1500V Minimum
Maximum Working Voltage	277VAC
Overload	Minimum 4.8 times rated current for 100 cycles
Temperature Rise	30°C maximum at rated current
Maximum Continuous Current	277VAC
Endurance	50,000 cycles minimum, resistive, inductive, tungsten filament lamp load (Fed Spec)
Mechanical	
Terminal Accommodations	#14 AWG – #10 AWG
Environmental	
Flammability	UL94 V2
Operating Temperature	Maximum continuous +115°C, minimum -40°C

Materials

Back Body	Glass-Reinforced Nylon	Contacts	Silver Cadmium Oxide
Front Body	Nylon	Spring Arm	Brass
Toggle	Thermoplastic Polycarbonate	Bumper	Rubber
Terminals	Brass	Spring	Zinc-Plated Steel
Terminal Screws	Tri-Drive Brass-Plated Steel	Ground Terminal	Brass
Strap	Plated Steel	Ground Screw	Tri-Drive Zinc-Plated Steel

15 Amp Cover	Blue
20 Amp Cover	Red

Warranty

1 Year

WALLPACKS
TALLPACK™

Compact, low-cost Wallpack with uniform light output for outdoor security lighting. HPS, Metal Halide or CFL with photocell or sensor.



Photocell for automatic dusk to dawn operation

Vandal resistant polycarbonate housing on WPT Series

Die formed aluminum reflector and prismatic polycarbonate refractor for wide light distribution

Heavy, die cast aluminum back plate with box mounting template

Heavy duty cast aluminum housing on WPTG Series

Shades work great with Tallpacks! (see pg. 50)

Heavy prismatic glass refractor

Packaging has product features, ballast and lamp specifications plus lighting layout photometrics and installation instructions

1/2" bottom conduit knockout









New! **PULSE START** Metal Halide

- SAVE ENERGY $$
- LONGER LAMP LIFE
- FASTER START TIME
- BETTER LUMEN MAINTENANCE
- LAMPS REMAIN SAME COLOR
- COLD STARTING TO -40°

UTILITY REBATES POSSIBLE

Product Information

Watts	Lamp Type	Lamp Base	Ballast	Starting Amps / Operating Amps 120V	208V	240V	277V	Input Watts	Lamp ANSI	Initial Lumens	Lamp Hours
High Pressure Sodium Lamp supplied with fixture											
35	ED17	Med	R-NPF 120V	1.4 / 0.9				46	S76	2,250	24,000
50	ED17	Med	R-NPF 120V	1.8 / 1.2				62	S68	4,000	24,000
70	ED17	Med	R-NPF 120V	2.1 / 1.6				86	S62	6,300	24,000
70	ED17	Med	HX-HPF QT	.8 / .9	.5 / .5	.4 / .4	.4 / .4	91	S62	6,300	24,000
100	ED17	Med	R-NPF 120V	3.1 / 2.1				115	S54	9,500	24,000
100	ED17	Med	HX-HPF QT	1.3 / 1.2	.8 / .7	.7 / .6	.6 / .5	130	S54	9,500	24,000
Compact Fluorescent CFL Lamp supplied with fixture											
28	Quad	GX32d-3	NPF 120V	.6 / .2				26		1,200	10,000
42	Triple	GX24q-4	Electronic QT	.38	.25	.20	.17	47		3,200	12,000
Metal Halide Lamp supplied with fixture PS = Pulse Start											
PS 50	ED17	Med	HX-NPF 120V	2.0 / 1.6				69	M110	3,400	10,000
PS 50	ED17	Med	HX-HPF 120V	.8 / .7				69	M110	3,400	10,000
PS 50	ED17	Med	HX-HPF DT	.6 / .7			.3 / .3	72	M110	3,400	10,000
PS 70	ED17	Med	HX-NPF 120V	2.5 / 2.1				94	M98	5,600	15,000
PS 70	ED17	Med	HX-HPF QT	.6 / .9	.3 / .5	.3 / .5	.3 / .4	90	M98	5,600	15,000
PS 100	ED17	Med	HX-HPF QT	1.2 / 1.2	.8 / .7	.7 / .6	.6 / .5	129	M90	9,000	15,000

Accessories

Wire Guard
Shade - curved
Shade - rectangular



Specifications

UL Listing:
Suitable for wet locations

Housing & Refractor:
WPTS
Vandal resistant polycarbonate molded refractor. Die cast Aluminum Housing.
WPTG
Heavy die cast aluminum housing with prismatic glass refractor.

Reflector:
Die formed aluminum for wide light distribution.

Ballast Housing:
Stamped steel painted white

Back Plate:
Heavy die cast aluminum. 1/2" bottom conduit knockout. Knockouts for mounting to 3" or 4" junction boxes.

Socket:
HPS: Porcelain 4kv Pulse Rated
CFL: 28w = GX32d-3, 42w = GX24q-4

Sensor Switching Capacity:
250 watts fluorescent on WPTFMS model only. 120 volt only.

Sensor Time Adjustment:
5 seconds to 15 minutes

Sensor Detection Zone:
Full 180° by 30'

Fax Info on Demand 24/7

Call RAB FaxBack at 888 722-1236.
Enter document numbers shown below:

	Catalog Page	Installation Manual
Tallpack Die Cast	239	224
Tallpack	239	248
Smart Tallpack	239	247
Tallpack (NPC)	239	246

For more info on RAB FaxBack see p.170

Product Info on the Internet:
www.rabweb.com, click "support"

Cross References:
Available on pages 150-153 and at www.rabweb.com

Photometrics

70w HPS @ 10' Mounting Height

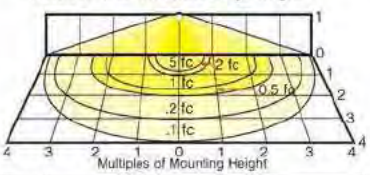

Mounting Height	Multiplier
8'	1.6
10'	1.0
12'	.7
16'	.4
20'	.25

HPS Watts	Multiplier	CFL Watts	Multiplier
100	1.5	22	.2
70	1.0	42	.5
50	.6		
35	.4		

MH Watts	Multiplier
100	1.4

RAB TEL 888 RAB 1000
FAX 888 RAB 1232
www.rabweb.com

Tallpack Die Cast w/ Glass

Heavy duty die cast aluminum housing with prismatic glass refractor. HPS and Metal Halide models available. with 1/2" bottom and back conduit knockout. Factory installed photocell optional. Lamp included.

Finish: ● Architectural Bronze ○ White



HPS Tallpack

HPS "Tall" Wallpack. Vandal resistant polycarbonate housing. Heavy die-cast aluminum back plate with 1/2" bottom and back conduit knockout. Factory installed photocell optional. Lamp included.

Finish: ● Architectural Bronze ○ White



Fluorescent Tallpack

28 & 42 watt compact fluorescent Tallpack. Vandal resistant polycarbonate housing. Heavy die-cast aluminum back plate with 1/2" bottom and back conduit knockout. Factory installed photocell optional. Operating temperature 28w (-20ºF), 42w (0ºF). Lamp included.

Finish: ● Architectural Bronze ○ White



Fluorescent Smart Tallpack

28 & 42 watt compact fluorescent Tallpack with built-in mini sensor for motion activated operation. Vandal resistant polycarbonate housing. Sensor has 180º detection and controls up to 250 watts. 120 volt only. Lamp included.

Finish: ● Architectural Bronze ○ White



Catalog Numbers

For white fixture finish add suffix "W"		For white fixture finish add suffix "W"		For white fixture finish add suffix "W"		For white fixture finish add suffix "W"
Photocell	**No Photocell**	**Photocell**	**No Photocell**	**Photocell**	**No Photocell**	**With Sensor**
		WPTS35	WPTS35NPC			
		WPTS50	WPTS50NPC			
		WPTS70	WPTS70NPC			
WPTGSN70/PC	WPTGSN70					
WPTGSH70QT/PC*	WPTGSH70QT					
WPTGSN100/PC	WPTGSN100					
WPTGSN100QT/PC*	WPTGSH100QT					
* Specify Photocell voltage						
				WPTF28	WPTF28NPC	WPTF28MS (120 volt only)
				WPTF42*	WPTF42NPC	WPTF42MS (120 volt only)
WPTGHN50/PC	WPTGHN50					
WPTGHH50/PC	WPTGHH50					
WPTGHH50DT/PC*	WPTGHH50DT					
WPTGHN70/PC	WPTGHN70					
WPTGHH70QT/PC*	WPTGHH70QT					
WPTGHH100QT/PC*	WPTGHH100QT					
GDWPTG	GDWPTG					
SHC1	SHC1	SHC1	SHC1	SHC1	SHC1	SHC1
SHR1	SHR1	SHR1	SHR1	SHR1	SHR1	SHR1

Dimensions

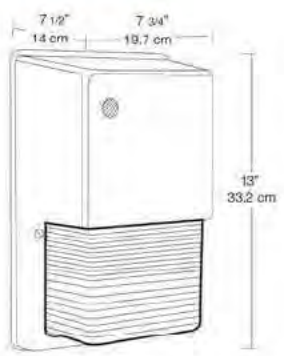

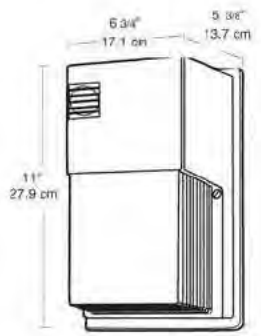

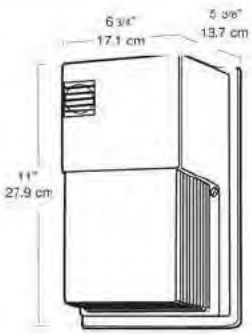

Detection Pattern

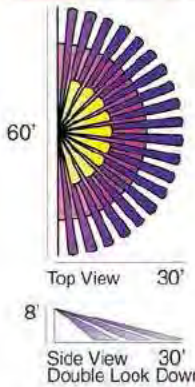

TEL 888 RAB 1000
FAX 888 RAB 1232
www.rabweb.com
RAB

VXBR100DG



JOB NAME: _____

DATE: _____

TYPE: _____

DESCRIPTION

Die cast aluminum construction. Wall bracket plus junction box with sturdy mounting lugs. Medium base socket, 1/2" or 3/4" NPS hub size and a variety of globes. Incandescent lamp A21 for 100 series, PS25 for 200 Series. Lamp not supplied. CFL: 13 & 22 watt lamp supplied.

SPECIFICATIONS

Colored Globe Maximum Watts:
100 watts

Maximum Watts:
150 watts

Country of Origin
Designed by RAB in New Jersey and assembled in Taiwan

Optional Reflectors:
Highly reflective white baked polyester epoxy powder finish over a heavy gauge aluminum base. Reflectors thread onto fixtures. See RV series.

Socket:
Premium porcelain with 150• C 8" leads attached. Fastened with 2 brass screws.

Patents:
RAB sensor and fixture designs are protected under U.S. and International Intellectual Property laws.

Wattage:
See catalog number chart for maximum wattage with clear glass, colored glass and Permaglobes.

Die Cast Guard:
Supplied with one piece die cast guard with set screw

UL Listing:
Suitable for wet locations. Suitable for use in dwellings. Suitable for use with 90• C supply wiring. Complies with UL Standard 1598. For non-hazardous locations where the lamp, socket and wiring require protection from rain, corrosive fumes, non-combustible dusts, moisture, non-explosive vapors and gases.

Globes:
Supplied with clear heat resistant glass globes unless otherwise stated. Colored and white glass globes available. Unbreakable RAB Permaglobes available in clear and in color.

Trade Agreements Act Compliant
This product is a product of Taiwan and a "designated country" end product that complies with the Trade Agreements Act.

GSA Schedule
This product is suitable for listing on the GSA Schedule of the US General Services in accordance with FAR Subpart 25.4

Color:
Natural

Weight:
4.14

DIMENSIONS

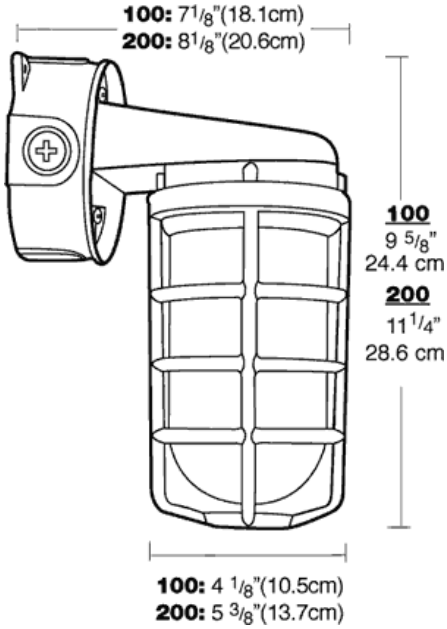

ORDERING INFORMATION

Total Watts	Lamp Type	Lamp Base	Ballast	Starting Amps/ Operating Amps 120V	208V	240V	277V	Input Watts	LAMP ANSI	Initial Lumens	Lamp Hours
150	A19	Medium	0	0	0	0	0	0.0	0	0	0

Factory Installed Options
Add suffix to Catalog Number

Note: Specifications may change without notice

RAB Lighting, Inc. • 170 Ludlow Ave• Northvale, NJ 07647 • Tel: 888 RAB-1000 • Fax: 888 RAB-1232 • www.rabweb.com

© 2011 RAB Lighting, Inc.

Pass & Seymour

legrand®

GFCIs
Specification Grade
15 & 20A, 125VAC

1595, 2095, 1595-S, 2095-S, 1595-NTL, 2095-NTL, 1595-TR, 2095-TR, 1595-L, 2095-L

Durability and protection that exceeds the 2006 UL standard.

Patented SafeLock™ protection denies power if the GFCI is miswired or if the GFCI is damaged and protection is lost. This prevents the unsafe condition of power without protection. P&S has the broadest range of ground-fault protection, with the first LED Nightlight/GFCI Combination, and the first Tamper-Resistant GFCI, in addition to Auto-Ground and Illuminated versions.

For Hospital Grade GFCIs, refer to SF1102R4.

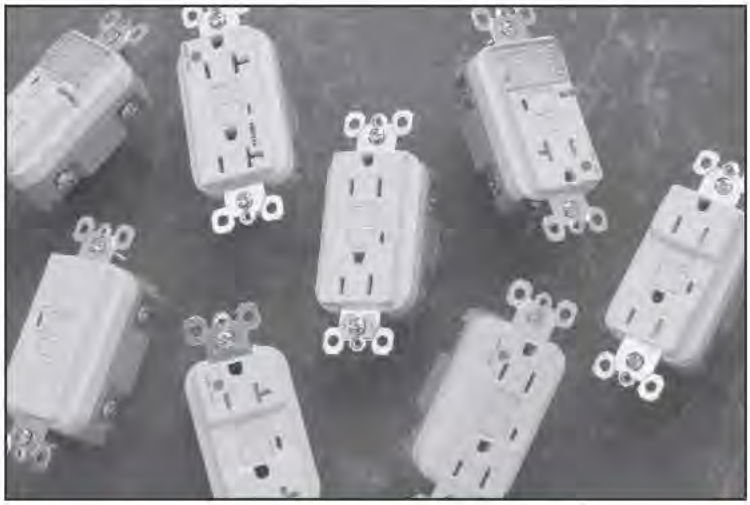

Features & Benefits

SafeLock™ Protection denies power if the GFCI is miswired or if the GFCI is damaged and protection is lost. This prevents the unsafe condition of power without protection.

Nickel post-plated mounting strap for superior corrosion resistance.

Trip indicator light (red lamp) makes it easy to identify tripped condition.

Side or internal screw-pressure-plate back wire termination with #14 – #10 AWG stranded or solid, copper or copper-clad conductors.

Captive screws make for easier installation.

Meets 2006 UL requirements.

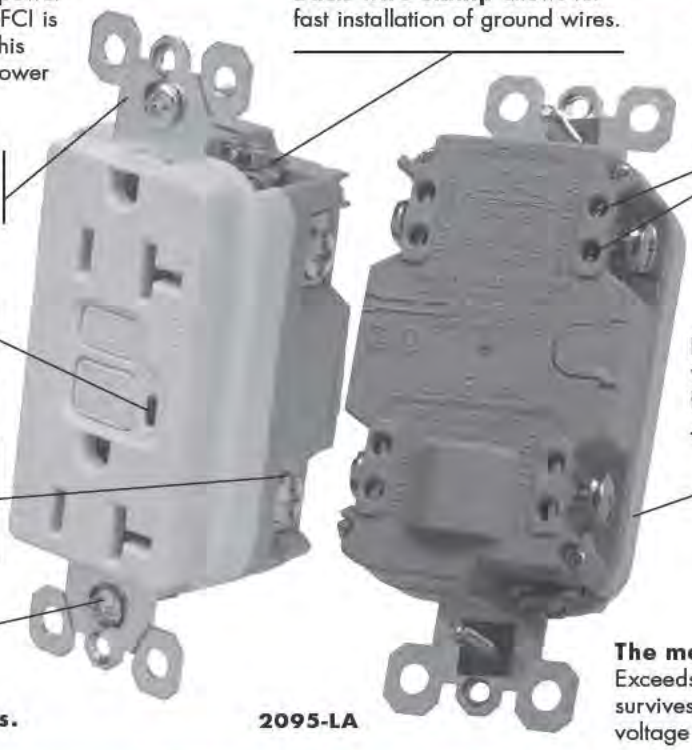

2095-LA

Back wire clamp allows for fast installation of ground wires.

Two back wire holes per termination add wiring flexibility, eliminate pigtailing and save box space.

Prevents line-load reversal miswire: No power to the face or downstream receptacles if wired incorrectly.

High-impact-resistant, thermoplastic construction for superior strength and durability.

1/4" thinner than competitors' GFCIs; leaves more room for wires in the box.

The most durable GFCI available. Exceeds UL943 voltage surge requirements; survives 100x the required UL 3kA/6kV voltage surge test cycles.

Field Uses/Vertical Markets

- Industrial
- Retail
- Health Care
- Office
- Education
- Hospitality/Lodging
- Institutional
- Multiple Dwelling

Pass & Seymour
legrand

GFCIs
Specification Grade
15 & 20A, 125VAC

Ordering Information

Additional Features & Benefits	Catalog Number	Rating A.	VAC	Color	NEMA Config. No.
GFCI Receptacles					
 **Patented SafeLock™ Protection** is standard on all P&S Specification Grade GFCIs.	**1595-***	15	125	I, W, Brown, GRY, BK, RED, LA	5-15R
	2095-*	20	125	I, W, Brown, GRY, BK, RED, LA	5-20R
GFCI with Auto-Ground Receptacles					
 **Auto-ground clip** assures positive ground to metal box.	**1595-S***	15	125	I, W, LA	5-15R
	2095-S*	20	125	I, W, LA	5-20R
Combination Nightlight/GFCI Receptacles					
 **High impact-resistant lens** made of Lexan®. **Energy-efficient LED** has average 20-year life expectancy, eliminating bulb replacement. **Photocell** turns nightlight ON in dark, OFF in daylight.	**1595-NTL*CC4**	15	125	I, W, BK, LA	5-15R
	2095-NTL*	20	125	I, W, GRY, RED, LA	5-20R
Tamper-Resistant GFCI Receptacles					
 **Dual mechanical shutter system** to help prevent insertion of foreign objects. **Patented UL Listed shutter system.**	**1595-TR*CC4**	15	125	I, W, BK, LA	5-15R
	2095-TR*	20	125	I, W, Brown, GRY, BK, RED, LA	5-20R
Illuminated GFCI Receptacles					
 **Green indicator light ON** when power is available. **LED turns OFF** when unit has tripped or power has failed.	**1595-*L**	15	125	I, W, Brown, LA	5-15R
	2095-*L	20	125	I, W, Brown, GRY, LA	5-20R


NEMA 5-15R


NEMA 5-20R

***Color Designation**

I	**Ivory**	-	**Brown**	BK	**Black**	LA	**Light Almond**
W	**White**	GRY	**Gray**	RED	**Red**		

For more information on these and other P&S products refer to our Catalog or visit our web site.

GFCIs
Specification Grade
15 & 20A, 125VAC

Pass & Seymour

legrand®

Technical Specifications

3rd Party Compliance

cULus Listed File Number E42190, Standard UL498 Attachment Plugs and Receptacles, UL943 GFCIs. Federal Specification WC596. Standard CSA C22.2 No. 42 General Use Receptacles, CSA C22.2 No. 144 GFCIs. Conforms to NEMA WD-1 and WD-6.

Performance

Electrical	
Dielectric Voltage	Withstands 1500V minimum
Trip Level	4 to 6 mA
Trip Time	.025 Second Nominal
Frequency	60 Hz
Maximum Working Voltage	125VAC
Voltage Range	102-132VAC
Mechanical	
Terminal Identification	Terminals identified in accordance with UL498 (Hot, White, Green)
Terminal Accommodation	#14 AWG – #10 AWG solid or stranded copper conductor only
Product Identification	Ratings are a permanent part of device
Environmental	
Operating Temperature	-35°C to +66°C
Maximum Humidity	95%
Flammability	UL94 V2

Materials

Face	Nylon	Hex Head Grounding Screw	Steel (Green)
Body	Nylon	Flat Head Mounting Screws	Zinc-Plated Steel
Contacts	.03" Brass (.8)	Test/Reset Buttons	Nylon
Mounting Straps	.05" Nickel-Plated Steel (1.3)	Auto-Ground Clip	* Brass Alloy C260
Terminal Screws	Nickel-Plated Steel #8 - 32	Nightlight Lens	** Lexan®
		Tamper-Resistant Shutter	*** Thermoplastic

* For 1595-S and 2095-S Auto-Ground versions only.
** For 1595-NTL and 2095-NTL Nightlight versions only.
*** For 1595-TR and 2095-TR Tamper-Resistant versions only.

Warranty

1 Year

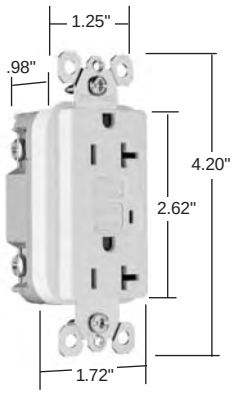

Dimensions for 15 & 20 Amp


Auto-Ground


Nightlight/GFCI


Illuminated


Tamper-Resistant

HEATING AND VENTILATION



12” Shutter Mounted Exhaust Fan, DAYTON

TECHNICAL SPECIFICATIONS	
Item	Speed Controllable Shutter Mounted Exhaust Fan
Volts	115
Frequency	60
Propeller Dia. (In.)	12
0.000-In. SP	800
Full Load Amps	1.4
Motor Speed (RPMs)	1550
Sones @ 5 Feet	7.6
0.125-In. SP	470
Sq. Opening Required (In.)	13
Square Panel Size (In.)	15 1/8
Motor Type	Totally Enclosed, Sleeve or Ball Bearing
Bearing Type	Sleeve
Motor HP	1/30
Includes	Automatic shutters
Guards	Heavy Duty, Have Gray Polyester Coating to Resist Corrosion
Standards	AMCA Certified, Complies with OSHA
Speed Control	4YC44
Propellers	Aluminum
Mounting Holes	In Shutter Frame, Allow Easier Installation
Application	For Ventilating Stores, Offices, Factories, Shops and Farm Buildings



Thermostat for Exhaust Fan, COLUMBUS ELECTRIC

Tech Specs

Switch Type	SPDT
Control Range (F)	50-90
Differential (Deg. F)	2/4
Height (In.)	4 3/4
Width (In.)	2 3/4
Depth (In.)	2 3/4
Inductive Amps @120V	4.5
Inductive Amps @ 240V	4.5



12” x 12” Aluminum Gravity Shutter, DAYTON

TECHNICAL SPECIFICATIONS	
Type	Exhaust
Fan Dia. (In.)	12
Overall Square (In.)	15
Sq. Opening Required (In.)	12 1/2
Blade Finish	White Enamel
Blade Material	Aluminum
Flange Depth (In.)	2 1/2
Flange Size (In.)	1 1/2
Frame Material	16-gauge Extruded Aluminum
Max. Velocity (FPM)	2500
Mounting	Vertical
Mounting Hole Size (In.)	9/32 x 1/2
Opening (Square-Ft)	0.900
Outside Dimensions (In.)	16 1/4
Panel	Double
Venturi Clearance (In.)	13 1/2

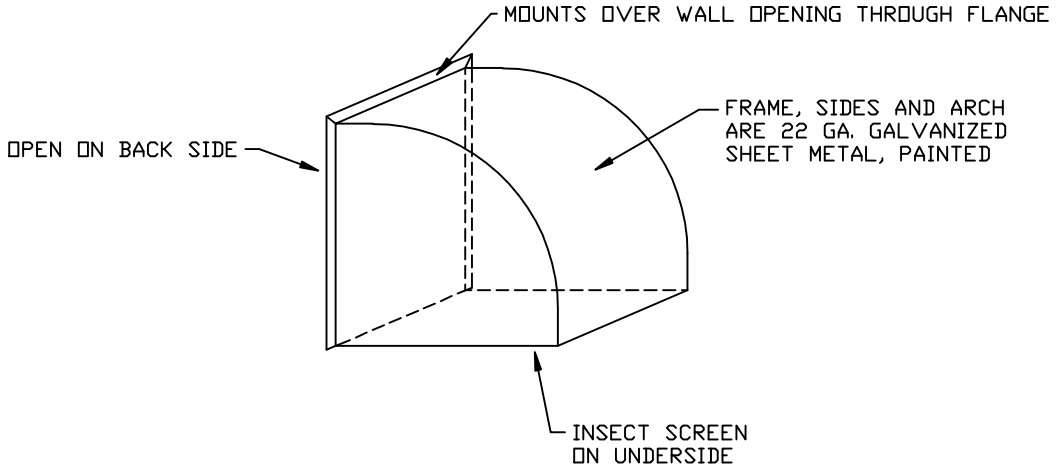

RAIN HOOD FOR VENT OPENING

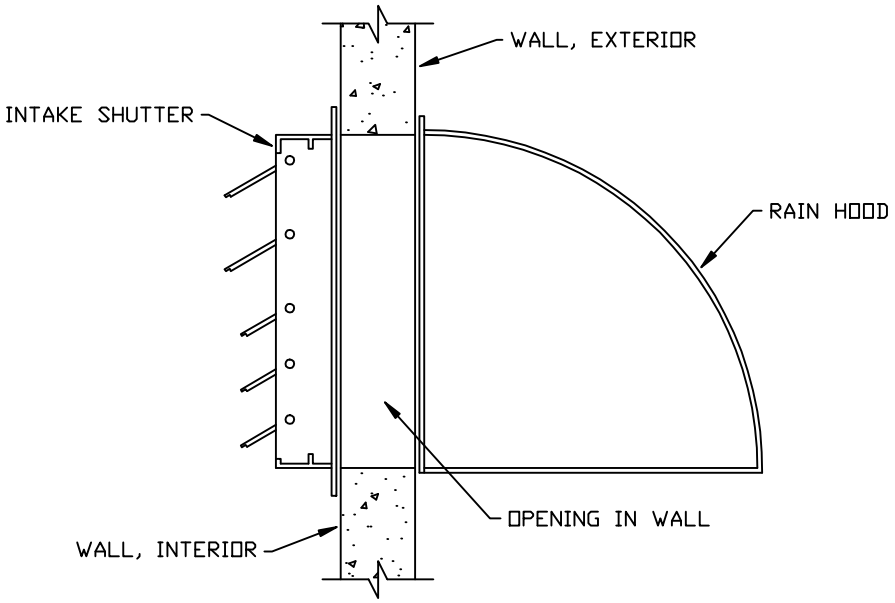

NOTE: SHUTTER AND HOOD ARE MOUNTED TO CONCRETE THROUGH FLANGE WITH 3/16" CONCRETE FASTENERS AND / OR 1/4" CONCRETE WEDGE ANCHORS, WITH CONTINUOUS CAULK ALONG BOTH SEAMS.

INTAKE SHUTTER FOR EXHAUST WITH RAIN HOOD SECTION

AES PRECAST CO., INC.	
LOCATION:	
DRAWN BY: MBW	SCALE:
DATE:	DWG NO:



3kW Unit Heater

Tech Specs	
Type	Electric
Voltage @ 60 Hz	240/208
Btu (x1000)	10.2/7.5
Temp. Rise (F)	27
CFM	350
Horizontal Air Throw (Ft.)	12
Amps per Phase	12.5/11.0
Phase	1
Depth (In.)	8 1/2
Width (In.)	14
Height (In.)	16
Application	Designed for Auxiliary, Supplemental or Primary Heat Source in Factories, Stores, Garages, Warehouses, Public Buildings, Stock Rooms, Service Stations, Any Large or Exposed Areas, or Additions
Housing	Heavy Gauge Neutral Gray Die Formed Steel
Thermal Protection	Automatic Reset
Vertical Mounting H (Ft.)	8
Control Circuit	Direct Line Voltage
Design	Advanced Pull Through Air Flow, Draws Air Across Heating Element for More Even Air Distribution and Cooler Element Operation, Venturi Outlet, Four Top and Four Back Threaded Reinforced Holes
Motor Type	Heavy Duty, Totally Enclosed
Mounting	Ceiling, Wall
Mounting Brackets	Optional Vertical and Horizontal
Rod Size	5/16 Inches-18
Standards	NEC, OSHA
Heating Elements	Steel Sheathed Tube, with Aluminum Fins for Faster Heat Dissipation
Louvers	Adjustable Outlet



Thermostat for Heater

Tech Specs

Item	Line Voltage Ventilation Control
Application	Heating or Cooling
Switch Type	SPDT
Control Range (F)	30-110
Differential (Deg. F)	3 1/2
Height (In.)	5 1/2
Width (In.)	2
Depth (In.)	2
Inductive Amps @120V	16
Inductive Amps @ 240V	8
Element Material	Stainless steel
Standards	UL, CSA

APPENDIX T2

Precast Well Vaults

Fab-Con, L.L.C.
Manufacturing Concrete Products
14670 Highway 82 West
Post Office Box 26
Coker, Alabama 35452
Phone: 205.333.0736 Fax: 205.333.8492

SPECIFICATIONS FOR FAB-CON, L.L.C. CONCRETE PRODUCTS

A. **Scope**

This specification covers the material and applicable design criteria used in the manufacturing of Pre-Cast reinforced concrete units produced in accordance with the plans and specifications.

B. **Reference Documents (Standards)**

Reference is made throughout this specification with various standards used in the underground utility structures industry. These standards are:

American Society for testing materials standards specifications (ASTM)

C858	Underground pre-cast concrete utility structures
C890	"Practice for Minimum Structural Design Loading for Monolithic or Sectional Pre-Cast Concrete Water and Wastewater Structures"
C913	"Pre-Cast Concrete Water and Wastewater Structures"
C478	"Pre-Cast Reinforced Concrete Manholes Section"
C15	Deformed and Plain Fillet-Steel Cards for Concrete Reinforcement
C31	Making and Curing Concrete Test Specimens in the Field
C33	Concrete Aggregates
C39	Compressive Strength of Cylindrical Specimens
C150	Portland Cement
C260	Air-Entraining Admixture for Concrete
C494	Chemical Admixtures for Concrete

American Concrete Institute (ACI)

ACI318	"Building Code Requirements for Reinforced Concrete"

American Association of State Highway and Transportation Officials (AASHTO)

C. **Design Loads**

Design loads shall consist of dead load, live load, and impact load, water table hydrostatic load, and any other special loads that may be imposed upon structure. Live loads are designed for pedestrian loads (350 psf), H-10 traffic loads (8,000 lb wheel load), H-20 and/or H-20-44 traffic loads (16,000 lb wheel load) the governing live load that produces the maximum shears and bending moment in given structure. The dead load is considered to be the worse condition with the water table located at 3' -0" below the grade.

D. **Forms**

Forms shall be accurately constructed and strong enough to maintain the structures dimensions within required tolerances.

E. **Concrete**

E.1: Cement – Portland cement shall conform to ASTM C150

E.2: Aggregate – Fine and coarse aggregate conforming to ASTM C33 and lightweight aggregate conforming to ASTM C330.

E.3: Admixtures – May be used provided such admixtures are not injurious to other products used in the cement.

- A: Chemical admixtures shall conform to specification C494.
- B: Fly Ash Admixtures shall conform to specification C618.
- C: Air Entraining Admixtures shall conform to specification C260.

E.4: Water – Potable

E.5: Steel Reinforcement – Shall be of the size and located per plans and tied to withstand displacement during pouring operation.

- A: Bar Reinforcement – Conforming to specifications A184 / A184M / A615 / A615M / A616 / A617 or A706 / A706M.

E.6: Inserts and Embedded Metal – Shall be of the type required for the intended task and meet the following standards:

- A. Structural steel plates, angles, etc. ASTM A36
- B. Welded studs AWS D1.1

F. **Concrete Mixes**

F.1: Mix Preparations – Concrete shall be of uniform mix of quality materials listed in Section "E – Concrete". Mix proportions shall be determined by following the standards in ACI319 Chapter 5.

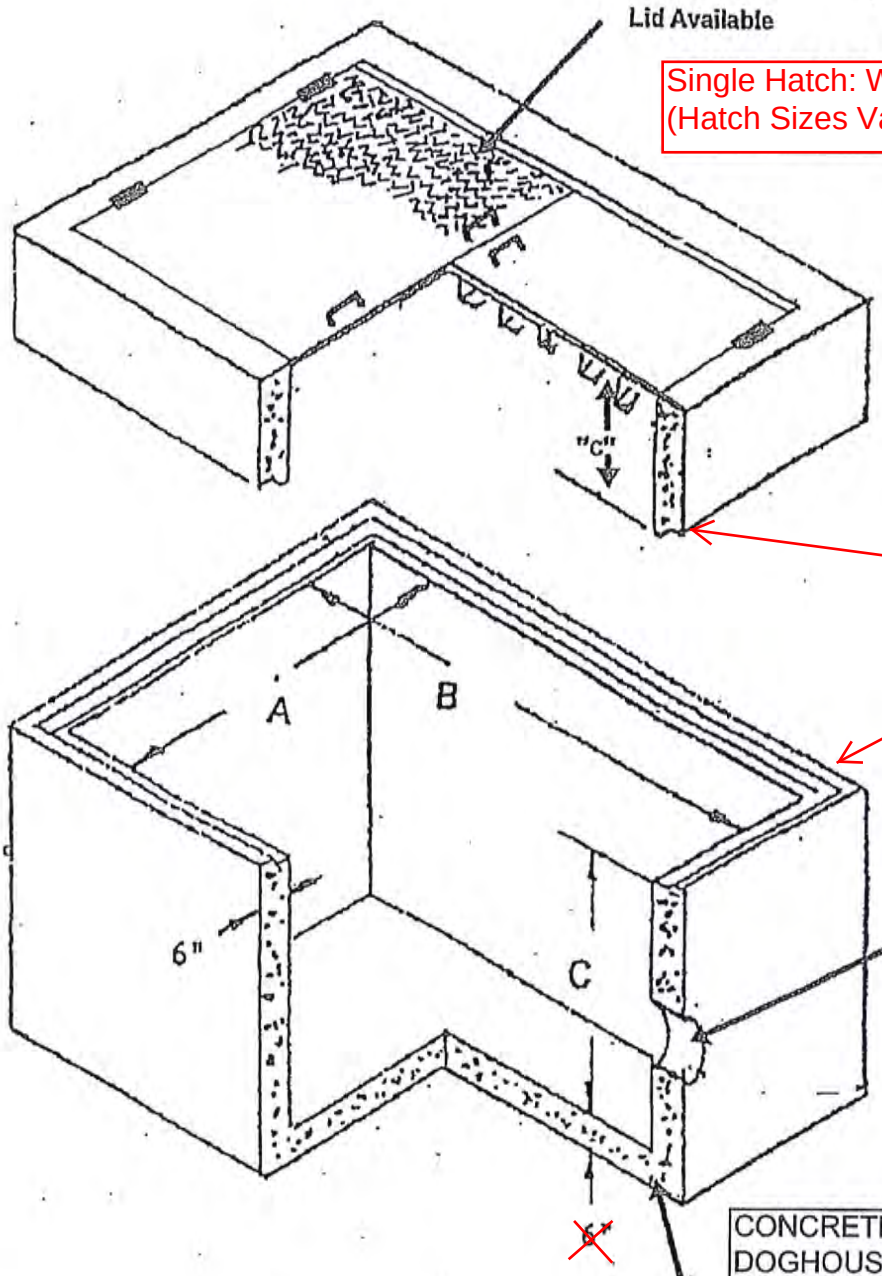

Single Hatch: W-AHS
(Hatch Sizes Vary)

Monolithic Casting with Lid Section

Block Outs

Placed and Sized Per Customer Order

CONCRETE VAULT TO BE DOGHOUSE STYLE WITH OPEN BOTTOM

"C" = 24" to 36" based on field conditions

A	B	C
37"	37"	12" - 48"
48"	48"	12" - 48"
36"	60"	~~12" - 48"~~
36"	96"	12" - 48"
48"	72"	12" - 48"
72"	96"	12" - 48"

FAB-CON, L.L.C.

FLOOD-RESISTANT

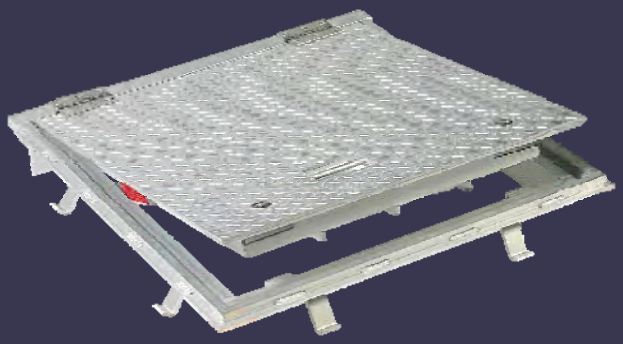

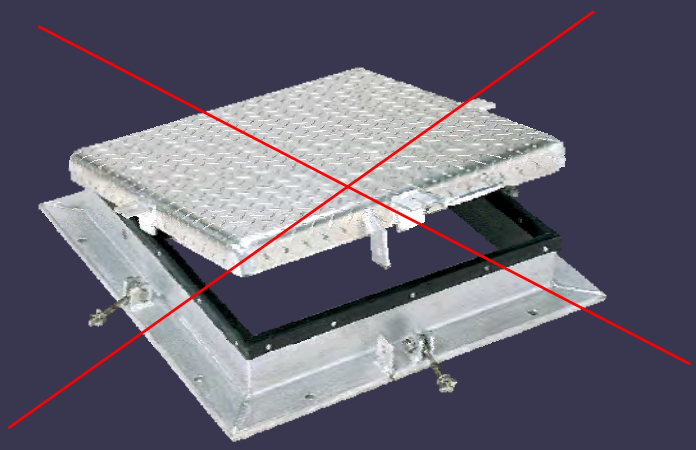

W-AHS Access Hatches Flush installation, designed for 25 ft (7.6 M) head of water and reinforced for pedestrian or H-20 wheel loading







U.S.F. Fabrication's flood-resistant access hatches are engineered for installation in areas subject to temporary flooding conditions.



W-APS and W-AHS covers are gasketed and reinforced to withstand floodwater pressure

Manufacturing a complete line of engineered metal products for the construction industry, we set the standard for quality, service and innovation. For product specifications and details, visit:

www.usffab.com

U.S.F. FABRICATION
FLOOR ACCESS DOORS, GRATING & MISC. METAL FABRICATION

Manufacturing in the USA since 1916

U.S.F. Fabrication, Inc., Hialeah, Florida USA 1-800-258-6873 Fax: 305-882-1577 service@usffab.com
Outside USA & Canada: 1-305-364-8221 Fax: 1-305-512-7721 export@usffab.com

FLOOD-RESISTANT HATCHES

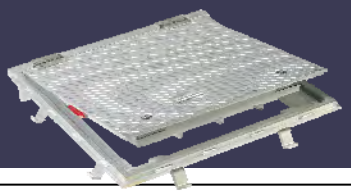

Model W-AHS Flush installation, designed for 25 ft (7.6 M) head of water and reinforced for pedestrian or H-20 wheel loading



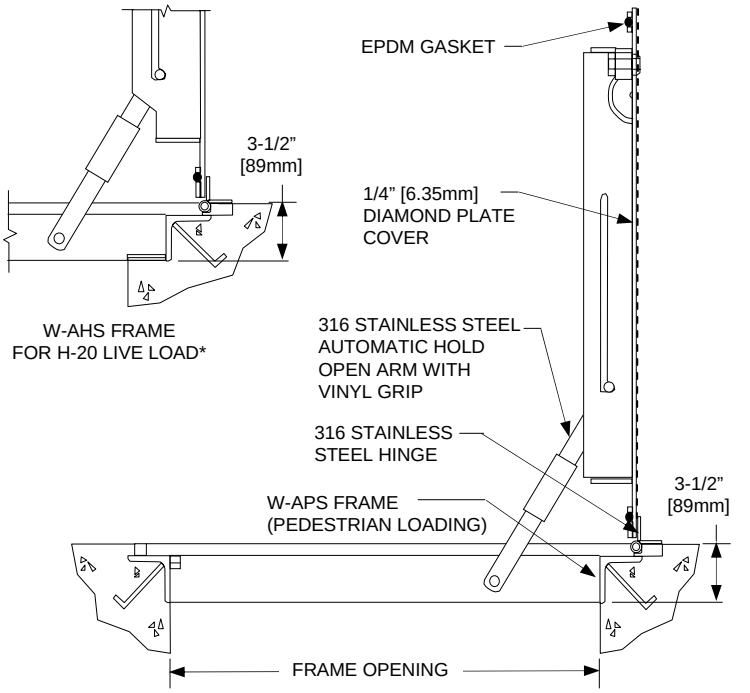

SPECIFICATIONS: W-AHS

The floodtight access hatch shall be *W-AHS*)as manufactured by U.S.F. Fabrication, Inc., Hialeah, Florida with the size being specified on the plans.

Cover: Cover shall be 1/4" aluminum diamond plate with continuous 9/16" diameter EPDM gasket around the perimeter and reinforced for *AASHTO H-20** live load, and capable of holding up to 25 ft. head of water. Cover shall be equipped with a flush lifting handle and 316 stainless steel hold-open arm with red vinyl grip that automatically locks the cover in the 90 degree open position.

Frame: Frame shall be 3/8" aluminum angle with 3/16" x 1- 1/2" strap anchors welded at 18" [457mm] on center around the perimeter.

Hinges: Hinges shall be 316 stainless steel.

Latches: Latches shall be 316 stainless steel cam locks.

Finish: Cover and frame shall be mill finish aluminum. Hardware shall be 316 stainless steel.

Installation: Installation shall be in accordance with the manufacturer's instructions.

Warranty: The hatch shall be manufactured in the United States. Manufacturer shall guarantee against defects in materials and workmanship for a period of ten [10] years.

** Model W-AHS is ntended for off-street locations that may occasionally receive AASHTO H-20 wheel loads (not for direct traffic applications). Upon request, the manufacturer shall provide structural calculations stamped by a registered professional engineer, which certify the design meets the requirements of AASHTO H-20.*

STANDARD SIZES (custom sizes are available)

FRAME OPENING In (mm) Width x Hinge Side	
24 x 24 [610 x 610]	30 x 36 [762 x 914]
24 x 30 [610 x 762]	30 x 48 [762 x 1219]
24 x 36 [610 x 914]	36 x 36 [914 x 914]
30 x 30 [762 x 762]	36 x 48 [914 x 1219]

OPTIONS

- Staple for Padlock

U.S.F. Fabrication, Inc., Hialeah, Florida USA 1-800-258-6873 Fax: 305-882-1577 Web: usffab.com Email: service@usffab.com
Outside USA & Canada: 1-305-364-8221 Fax: 1-305-512-7721 Email: export@usffab.com

In our efforts for continuous improvement, U.S.F. Fabrication, Inc. reserves the right to change product specifications without notice.

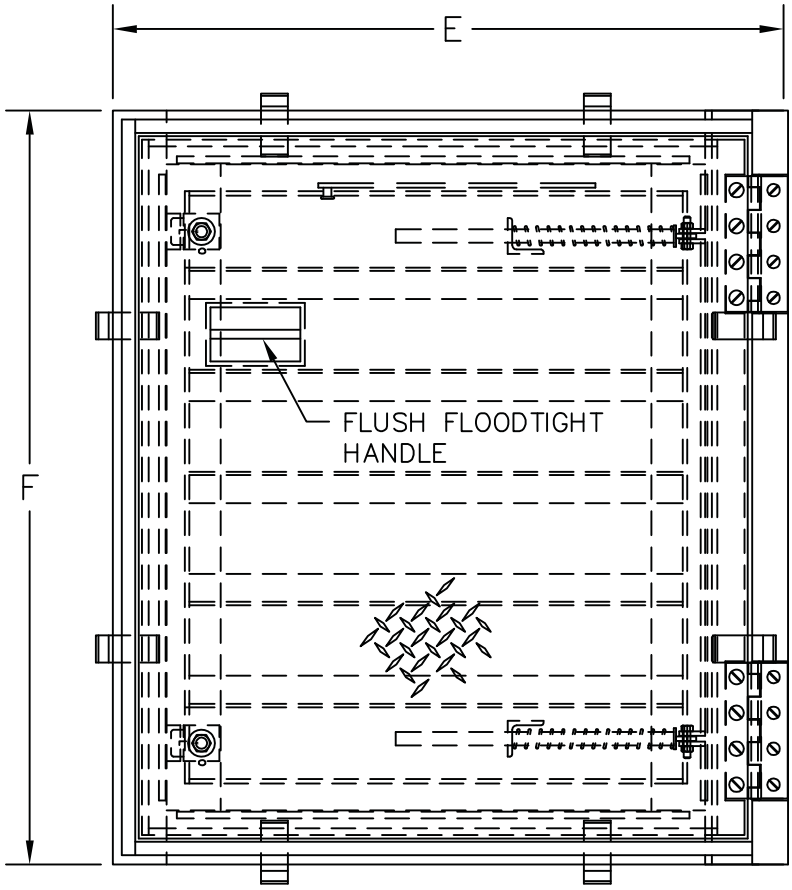

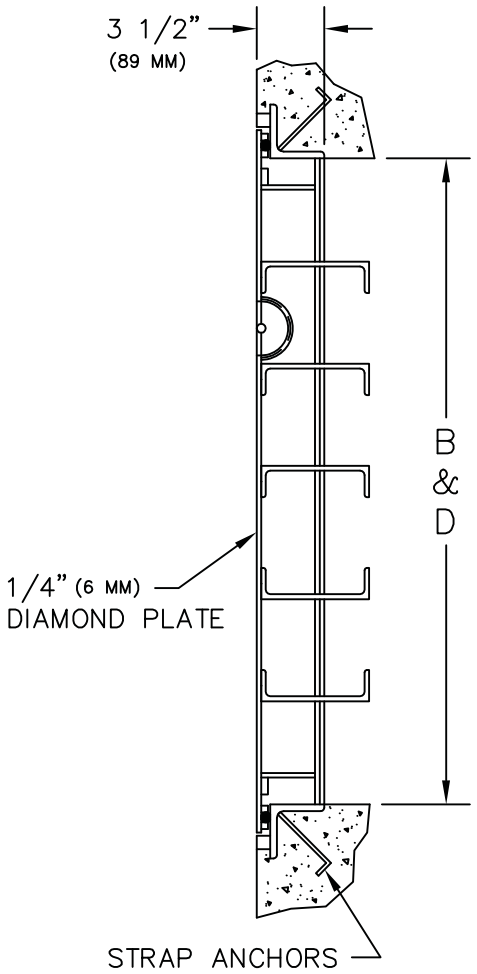

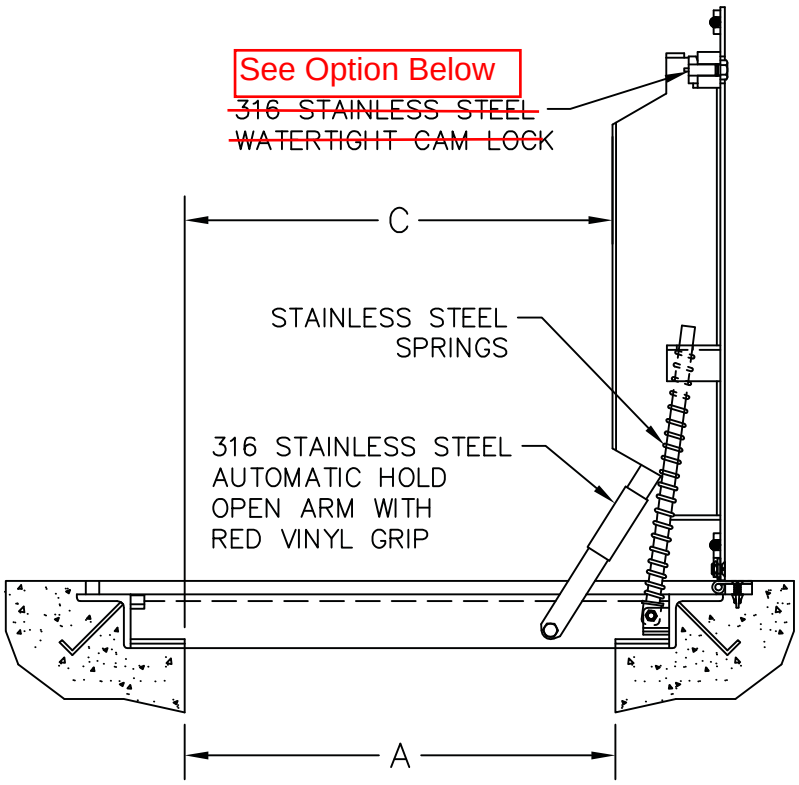

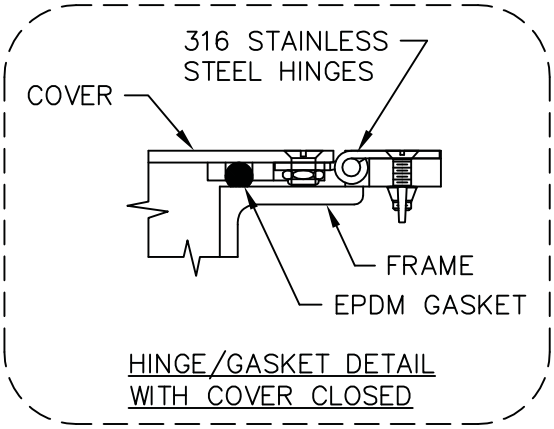

NOTE:
- MATERIAL: ALUMINUM WITH STAINLESS STEEL SPRINGS, 3/16 STAINLESS STEEL NUTS & BOLTS, CAM LOCKS, HINGES AND HOLD OPEN ARM.
- LOADING: DESIGNED FOR OFF-STREET LOCATIONS WHICH MAY OCCASIONALLY RECEIVE H-20 WHEEL LOADS. (CAPABLE OF HOLDING UP TO 25 FT. HEAD OF WATER)
- BITUMINOUS COATING IS APPLIED TO AREA OF FRAME IN CONTACT WITH CONCRETE.

OPTIONAL FEATURES
☑ STAPLE FOR PADLOCK
☐ OTHERS: _____
_____

U.S.F. FABRICATION, INC.
HIALEAH, FLORIDA

W-AHS (FLOODTIGHT/GASTIGHT) 24 (A) X 36 or 48 (B)

THIS DRAWING IS THE SOLE PROPERTY OF U.S.F. FABRICATION, INC. AND IS FOR ILLUSTRATIVE PURPOSES ONLY.

Available Options: Locking/Latching

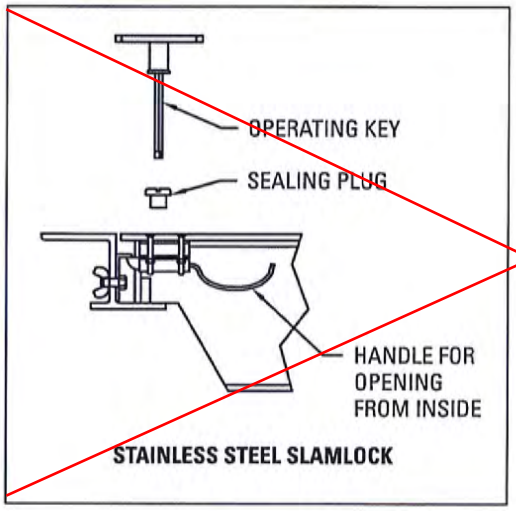

STAINLESS STEEL SLAMLOCK

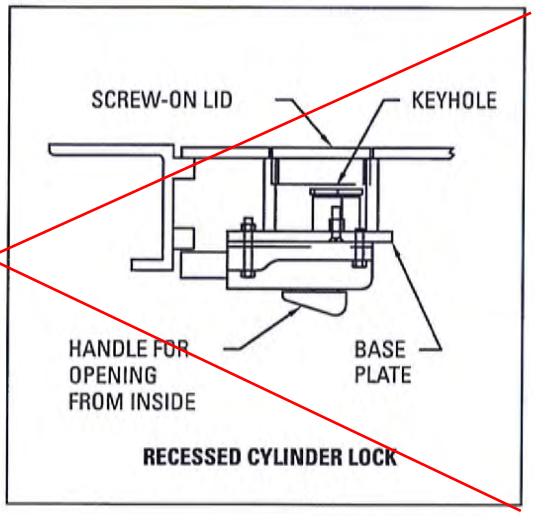

RECESSED CYLINDER LOCK

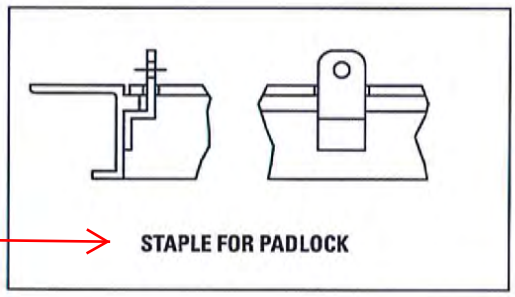

STAPLE FOR PADLOCK

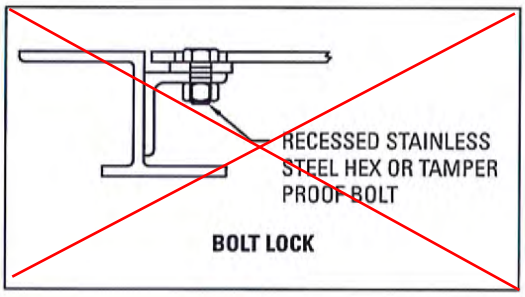

BOLT LOCK

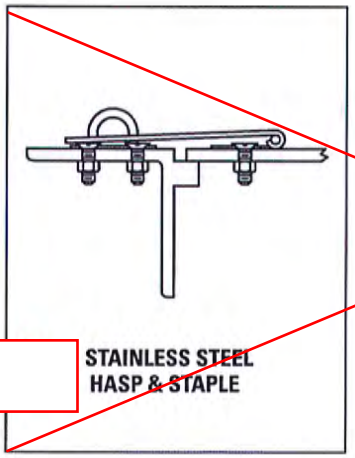

STAINLESS STEEL HASP & STAPLE

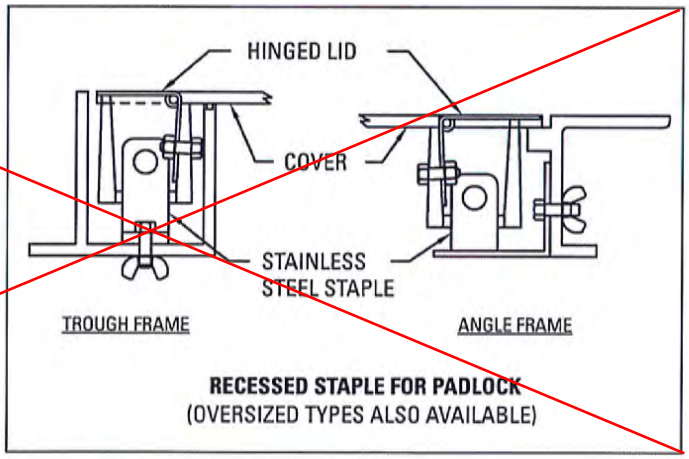

RECESSED STAPLE FOR PADLOCK
(OVERSIZED TYPES ALSO AVAILABLE)

USF FABRICATION CAN PROVIDE OTHER SPECIFIED LOCKING AND LATCHING DEVICES

APPENDIX T3

Submersible Well Pumps (IW Pumps)

GRUNDFOS

Company name:
Created by:
Phone:

Date: 11/16/2015

Position	Count	Description
	1	**5 SQ05-90**

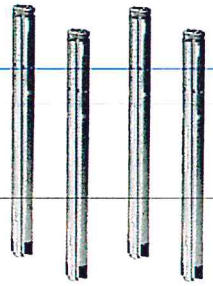

Product photo could vary from the actual product

Product No.: 96160130
3" multi-stage, submersible pump designed for domestic water supply, liquid transfer in tanks, irrigation and environmental applications. The pump has "floating" impellers, each with its own tungsten carbide/ceramic bearing.

The pump features soft starting and protection against dry-running, upthrust, overvoltage, undervoltage, overload and overtemperature.

The motor is a one-phase motor of the permanent magnet rotor type ensuring optimum efficiency within a wide load range.
The motor is fitted with a replaceable cable plug.

Liquid:

Pumped liquid:	Water
Maximum liquid temperature:	95 °F
Max liquid temperature at 0.15 m/sec:	95 °F
Liquid temp:	68 °F
Density:	62.29 lb/ft³

Technical:

Speed for pump data:	10700 rpm
Rated flow:	4.4 US gpm
Rated head:	111.6 ft
Approvals on nameplate:	UL, cUL
Approvals on motor nameplate:	CE,UL,CUL
Curve tolerance:	ISO9906:2012 3B

Materials:

Pump:	Polyethylene / Stainless steel DIN W.-Nr. 1.4301
Motor:	Stainless steel DIN W.-Nr. 1.4301 AISI 304

Installation:

Pump outlet:	NPT 1
Minimum borehole diameter:	2.99 in

Electrical data:

Motor type:	MS3
Power input - P1:	1.02 kW
Rated power - P2:	0.939 HP
Main frequency:	60 Hz
Rated voltage:	1 x 200-240 V
Start. method:	direct-on-line
Service factor:	1,85
Rated current:	5.2 A
Power factor:	1,00
Rated speed:	10700 rpm

GRUNDFOS

Company name:
Created by:
Phone:

Date: 11/16/2015

96160130 5 SQ05-90 60 Hz

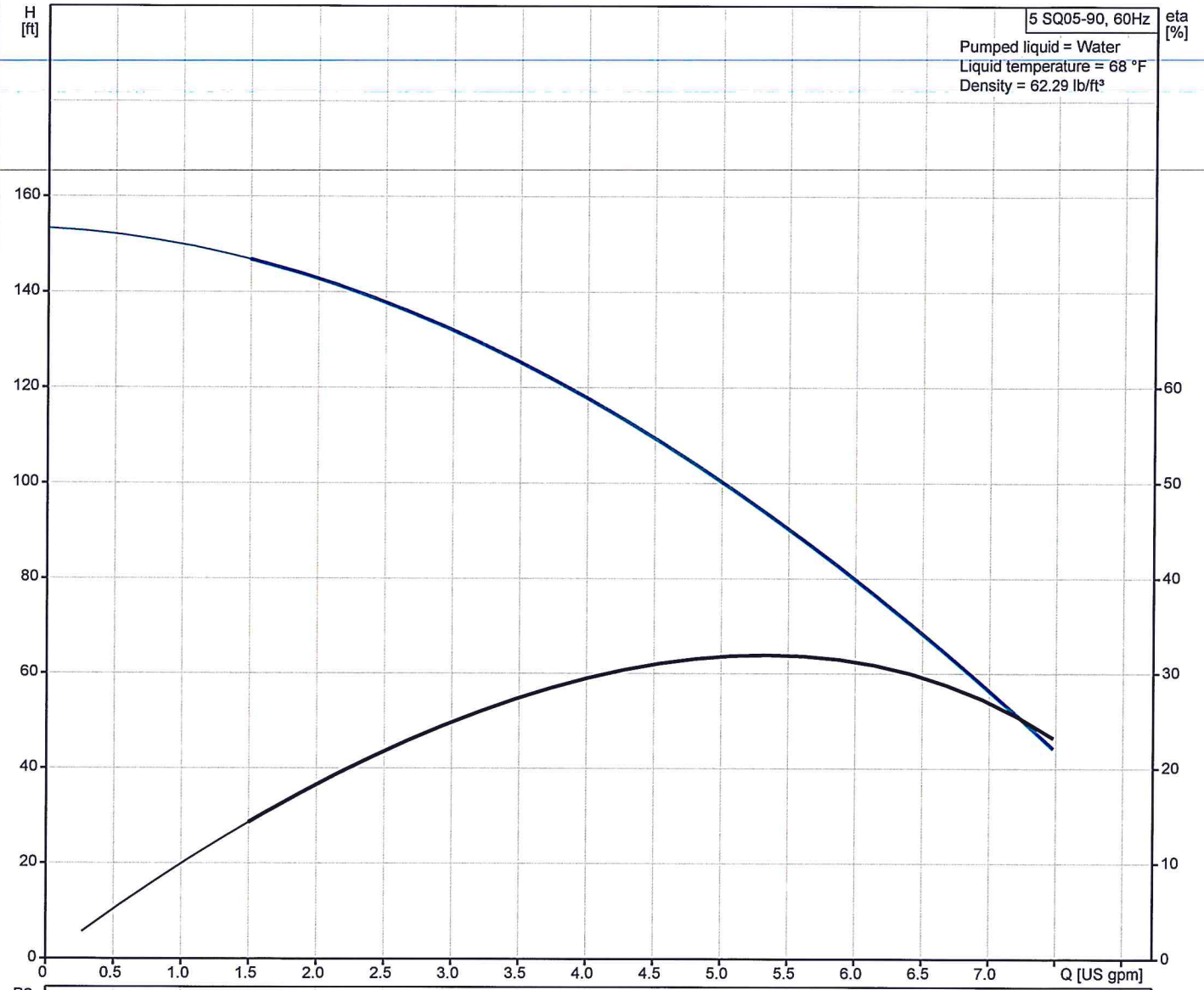

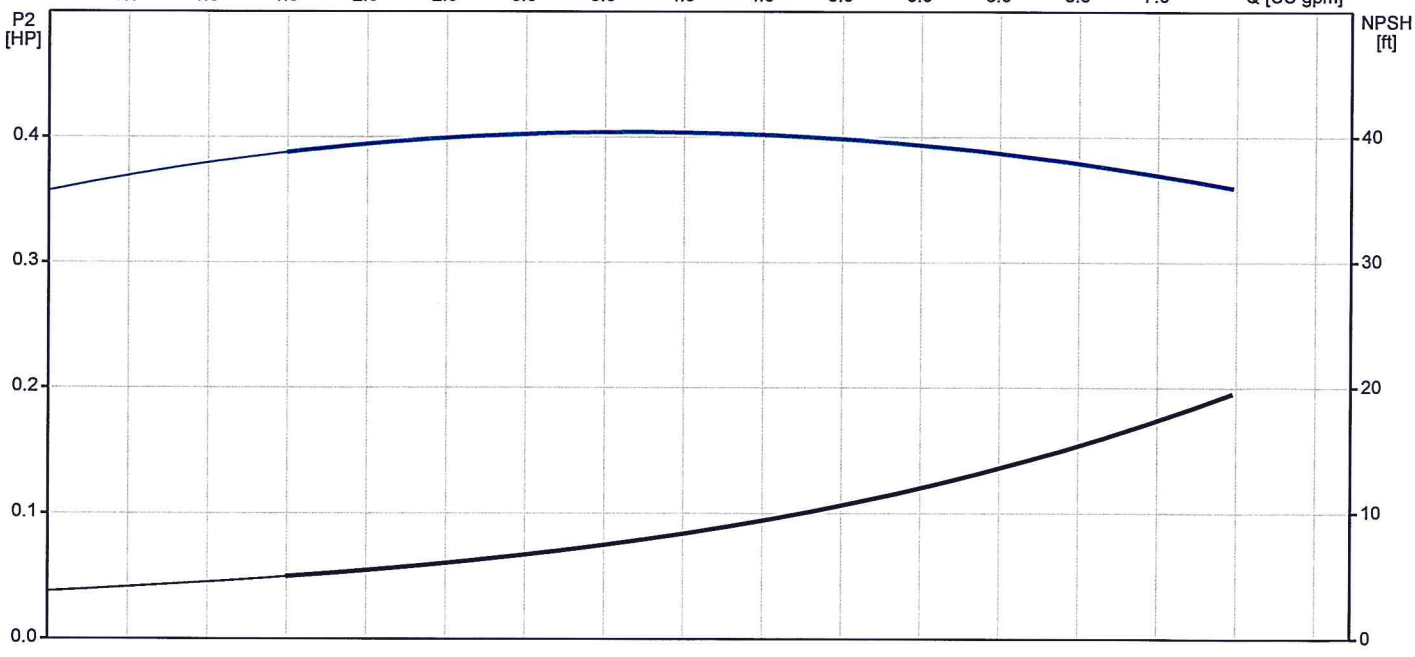

GRUNDFOS

Company name:
Created by:
Phone:

Date: 11/16/2015

Description	Value
General information:	
Product name:	5 SQ05-90
Product No.:	96160130
Position	
EAN:	5700398684503
Price:	On request
Technical:	
Speed for pump data:	10700 rpm
Rated flow:	4.4 US gpm
Rated head:	111.6 ft
Approvals on nameplate:	UL, cUL
Approvals on motor nameplate:	CE,UL,CUL
Curve tolerance:	ISO9906:2012 3B
Pump Number:	96397360
Stages:	2
Model:	B
Valve:	pump with built-in non-return valve
Materials:	
Pump:	Polyethylene / Stainless steel
	DIN W.-Nr. 1.4301
Motor:	Stainless steel
	DIN W.-Nr. 1.4301
	AISI 304
Installation:	
Pump outlet:	NPT 1
Minimum borehole diameter:	2.99 in
Liquid:	
Pumped liquid:	Water
Maximum liquid temperature:	95 °F
Max liquid temperature at 0.15 m/sec:	95 °F
Liquid temp:	68 °F
Density:	62.29 lb/ft³
Electrical data:	
Motor type:	MS3
Power input - P1:	1.02 kW
Rated power - P2:	0.939 HP
Main frequency:	60 Hz
Rated voltage:	1 x 200-240 V
Start. method:	direct-on-line
Service factor:	1,85
Rated current:	5.2 A
Power factor:	1,00
Rated speed:	10700 rpm
Enclosure class (IEC 34-5):	IP68
Insulation class (IEC 85):	F
Motor protection:	Y
Thermal protec:	internal
Length of cable:	4.922 ft
Motor Number:	96160535
Controls:	
CU 300/CU 301:	no communication possible
Others:	
Sales region:	Namreg

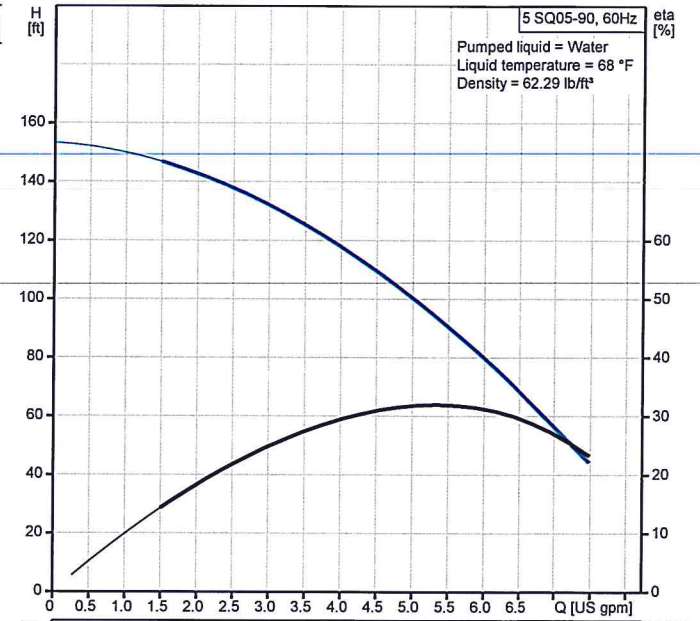

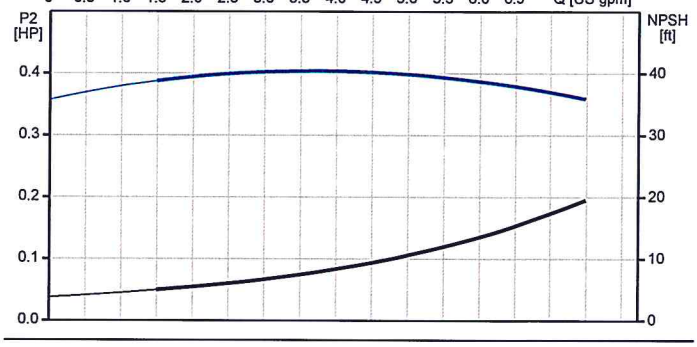

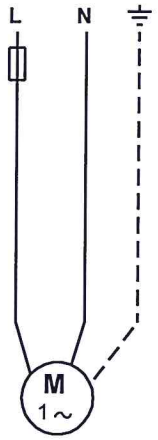

9. Construction

Materials of construction

SQ, SQE	
Component	**Splined shaft**
Valve casing	Polyamide
Discharge chamber	304 stainless steel
Valve guide	Polyamide
Valve spring	316LN stainless steel
Valve cone	Polyamide
Valve seat	NBR rubber
O-ring	NBR rubber
Lock ring	310 stainless steel
Top bearing	NBR rubber
Top chamber	Polyamide
Guide vanes	Polyamide
Impeller	Polyamide w/ tungsten carbide bearings
Bottom chamber	Polyamide
Neck ring	TPU / PBT
Bearing	Aluminum oxide
Suction interconnector	Polyamide
Ring	304 stainless steel
Pump sleeve	304 stainless steel
Pressure equalization cone	Polyamide
Spacer	Polyamide
Sand trap	316 stainless steel
Shaft w/coupling	304 stainless steel
Cable guard	304 stainless steel

SQE-NE	
Component	**Splined shaft**
Valve casing	PVDF
Discharge chamber	316 stainless steel
O-ring	FPM rubber
Valve cone	PVDF
Valve seat	FPM rubber
Top chamber	PVDF
Empty chamber	PVDF
Top bearing	FPM rubber
Neck ring	PVDF
Lock ring	316 stainless steel
Guide vanes	PVDF
Bottom chamber	PVDF
Impeller w/ tungsten carbide bearing	PVDF
Suction interconnector	PVDF
Ring	316 stainless steel
Shaft w/coupling	Sintered steel
	316 stainless steel
Cable guard	316 stainless steel
Cable guard screws	316 stainless steel
Pressure equalization cone	PVDF
Valve spring	316 stainless steel
Pump sleeve	316 stainless steel
Valve guide	PVDF
Spacer	316 stainless steel

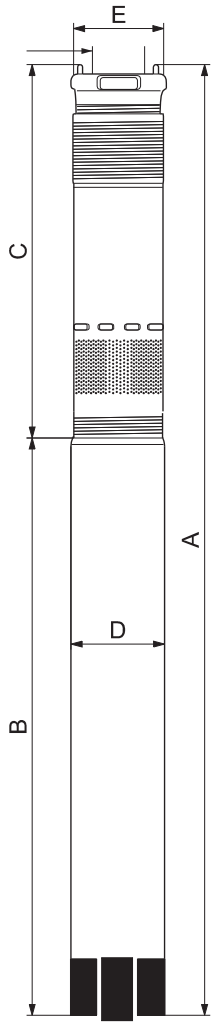

Discharge sizes:

1" NPT	5 SQ/SQE
1 1/4" NPT	10 - 15 SQ/SQE
1 1/2" NPT	22-30 SQ/SQE

TM04 7522 2110

SQ, SQE

(US) **Installation and operating instructions**



c UL US LISTED

LIMITED WARRANTY

Products manufactured by GRUNDFOS PUMPS CORPORATION (Grundfos) are warranted to the original user only to be free of defects in material and workmanship for a period of 24 months from date of installation, but not more than 30 months from date of manufacture. Grundfos' liability under this warranty shall be limited to repairing or replacing at Grundfos' option, without charge, F.O.B. Grundfos' factory or authorized service station, any product of Grundfos' manufacture. Grundfos will not be liable for any costs of removal, installation, transportation, or any other charges which may arise in connection with a warranty claim. Products which are sold but not manufactured by Grundfos are subject to the warranty provided by the manufacturer of said products and not by Grundfos' warranty. Grundfos will not be liable for damage or wear to products caused by abnormal operating conditions, accident, abuse, misuse, unauthorized alteration or repair, or if the product was not installed in accordance with Grundfos' printed installation and operating instructions.

To obtain service under this warranty, the defective product must be returned to the distributor or dealer of Grundfos' products from which it was purchased together with proof of purchase and installation date, failure date, and supporting installation data. Unless otherwise provided, the distributor or dealer will contact Grundfos or an authorized service station for instructions. Any defective product to be returned to Grundfos or a service station must be sent freight prepaid; documentation supporting the warranty claim and/or a Return Material Authorization must be included if so instructed.

GRUNDFOS WILL NOT BE LIABLE FOR ANY INCIDENTAL OR CONSEQUENTIAL DAMAGES, LOSSES, OR EXPENSES ARISING FROM INSTALLATION, USE, OR ANY OTHER CAUSES. THERE ARE NO EXPRESS OR IMPLIED WARRANTIES, INCLUDING MERCHANTABILITY OR FITNESS FOR A PARTICULAR PURPOSE, WHICH EXTEND BEYOND THOSE WARRANTIES DESCRIBED OR REFERRED TO ABOVE.

Some jurisdictions do not allow the exclusion or limitation of incidental or consequential damages and some jurisdictions do not allow limit actions on how long implied warranties may last. Therefore, the above limitations or exclusions may not apply to you. This warranty gives you specific legal rights and you may also have other rights which vary from jurisdiction to jurisdiction.

SQ, SQE

Installation and operating instructions

Page 4 US

US

CONTENTS

		Page
1.	**General description**	**4**
1.1	Applications	4
2.	**Preinstallation**	**4**
2.1	Well preparation	4
2.2	Make sure you have the right pump	4
2.3	Pumped liquid requirements	4
2.4	Motor cooling requirements	5
2.5	Liquid temperatures/cooling	5
2.6	Motor preparation	5
2.7	Refilling of motor liquid	5
3.	**Installation positions**	**6**
3.1	Positional requirements	6
4.	**Electrical connection**	**6**
4.1	General	6
4.2	Motor protection	6
4.3	Connection of motor	6
5.	**Cable sizing**	**7**
6.	**Splicing the cable**	**7**
7.	**Fitting the cable plug to the motor**	**7**
8.	**Fitting the cable guard**	**8**
9.	**Piping**	**8**
10.	**Installing the pump**	**9**
10.1	Installation depth	9
11.	**Generator operation**	**9**
12.	**Starting the pump for the first time**	**10**
12.1	Motor cooling and other considerations	10
12.2	Impurities in the water	10
12.3	Minimum flow rate	10
12.4	Built-in protection	10
12.5	Resetting the pump	10
12.6	MS 3 motors	10
12.7	MSE 3 motors	10
12.8	Maintenance and service	10
13.	**Assembly of pump and motor**	**11**
14.	**Troubleshooting**	**12**
14.1	Instruments not allowed	13
15.	**Checking of motor and cable**	**13**
16.	**Environment**	**13**
17.	**Disposal**	**13**
18.	**Technical data**	**14**



Before beginning installation procedures, these installation and operating instructions should be studied carefully. The installation and operation should also be in accordance with local regulations and accepted codes of good practice.

1. General description

The SQ/SQE is a 3 inch diameter submersible pump mainly designed for the pumping of raw water in domestic water supply. This manual is designed to assist in the proper set-up, installation and operation of these pumps.

1.1 Applications

Typical applications are:

- residential housing
- small waterworks
- pressure boosting
- irrigation systems
- liquid transfer in tanks.

2. Preinstallation

2.1 Well preparation

If the pump is to be installed in a new well, the well should be fully developed and bailed or blown free of cuttings and sand.

The construction of the Grundfos SQ/SQE submersibles makes them resistant to abrasion; however, no pump made of any material can forever withstand the destructive wear that occurs when constantly pumping sandy water.

If this pump is used to replace an oil-filled submersible or oil-lubricated line-shaft turbine in an existing well, the well must be blown or bailed clear of oil.

2.2 Make sure you have the right pump

Determine the maximum depth of the well and the drawdown level at the maximum pump capacity. Pump selection and setting depth should be made based on this data.

2.3 Pumped liquid requirements

Submersible well pumps are designed for pumping clear, cold water; free of air or gases. Decreased pump performance and life expectancy can occur if the water is not clear, cold or contains air or gases.

The water temperature should not exceed 104°F.

A check should be made to ensure that the installation depth of the pump will always be at least three feet below the maximum drawdown level of the well. The bottom of the motor should never be installed lower than the top of the well screen or within five feet of the well bottom.

2.4 Motor cooling requirements

To ensure proper motor cooling, refer to the table below for minimum flow requirements:

Flow velocity past the motor	Maximum liquid temperature
0.0 f/s (free convection)	86°F (30°C)
Min. 0.5 f/s	104°F (40°C)

If the pump is to be installed horizontally, e.g. in a tank, and there is a risk that the pump might be covered by mud, it must be installed in a flow sleeve.

2.5 Liquid temperatures/cooling

Figure 1 shows an SQ/SQE pump installed in a well.

With the pump operating, figure 1 illustrates the following:

- Well diameter
- Pump diameter
- Temperature of pumped liquid
- Flow past the motor to the pump suction strainer.

Note: The well diameter must be at least 3 inches. If there is a risk that the motor will be covered with sediment, it is recommended the pump be placed in a flow sleeve. The motor should always be installed above the well screen.

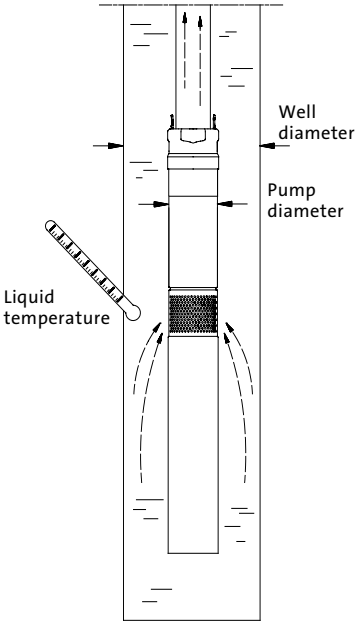

Fig. 1 Pump installed in well

2.6 Motor preparation

Grundfos MS 3 and MSE 3 submersible motors have water-lubricated slide bearings. No additional lubrication is required.

The submersible motors are factory-filled with a special Grundfos motor liquid, type SML 2, which will protect the motor liquid down to 4°F (–20°C) and prevent the growth of bacteria. The level of motor liquid is important for the operating life of the bearings and consequently the life of the motor.

2.7 Refilling of motor liquid

If for any reason the motor liquid has been drained or lost, the motor must be refilled with Grundfos motor liquid SML 2.

To refill the motor, proceed as follows:

1. Remove the cable guard and separate the pump end from the motor.
2. Place the motor in vertical position with an inclination of approximately 10°.
3. Remove the filling plug using a screwdriver or a similar tool.
4. Inject motor liquid into the motor with a filling syringe or similar tool, see fig. 2.
5. To allow possible air to escape, move the motor from side to side and turn the shaft.
6. Replace the filling plug and make sure it is tight.
7. Assemble pump end and motor.
8. Fit the cable guard.

The pump is now ready for installation.

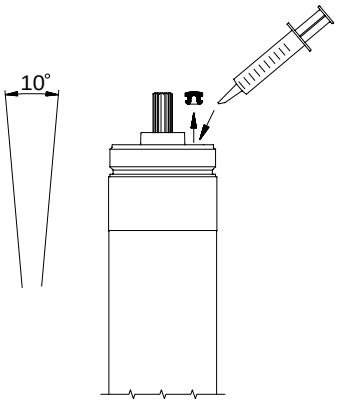

Fig. 2 Injecting motor liquid

US

3. Installation positions

3.1 Positional requirements

The pump is suitable for vertical as well as horizontal installation, however, the pump shaft must never fall below the horizontal plane, see fig. 3.

If the pump is to be installed horizontally, e.g. in a tank, and there is a risk that the pump might be covered by mud, it must be installed in a flow sleeve.

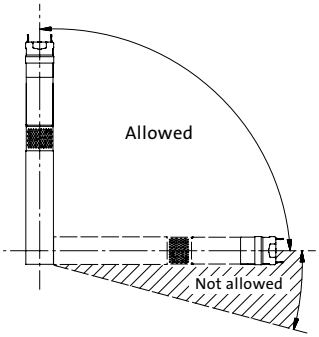

Fig. 3 Pump position

4. Electrical connection

4.1 General

The electrical connection should be carried out by an authorized electrician in accordance with local regulations.

Before starting work on the pump, make sure that the electricity supply has been switched off and that it cannot be accidentally switched on.

The pump must be grounded.

The pump must be connected to an external mains switch.

The supply voltage, rated maximum current and power factor (PF) appear on the motor nameplate.

The required voltage for Grundfos submersible MS 3/MSE 3 motors, measured at the motor terminals, is –10%/+6% of the nominal voltage during continuous operation (including variation in the supply voltage and losses in cables).

If the pump is connected to an installation where a Ground Fault circuit breaker (GFI) is used as additional protection, this circuit breaker must trip out when ground fault currents with DC content (pulsating DC) occur.

Note: The pump must never be connected to a capacitor or to another type of control box than CU 300 or CU 301.

Note: The pump must never be connected to an external frequency converter.

Supply voltage:

1 x 90-120 V or 1 x 200-240 V –10%/+6%, 50/60 Hz.

The current consumption can only be measured accurately by means of a true RMS instrument. If other instruments are used, the value measured will differ from the actual value.

The SQE pumps can be connected to a CU 300 or CU 301 control box.

4.2 Motor protection

The motor has built-in automatic thermal overload protection and requires no additional motor protection.

4.3 Connection of motor

The motor can be connected directly to the main circuit breaker.

Start/stop of the pump will typically be done via a pressure switch, see fig. 4.

Note: The pressure switch must be rated for the maximum amps of the specific pump.

Reduced risk of electric shock during operation of this pump requires the provision of acceptable grounding. If the means of connection to the supply connected box is other than grounded metal conduit, ground the pump back to the service by connecting a copper conductor, at least the size of the circuit supplying the pump.

Single-phase 2-wire wiring diagram for Grundfos motors

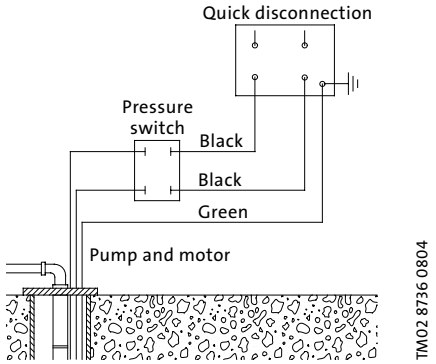

Fig. 4 Wiring diagram

Note: The pump must never be connected to a capacitor or to another type of control box than CU 300 or CU 301.

US

5. Cable sizing

Single-phase 60 Hz maximum cable length motor service to entrance:

Motor rating		Copper wire size								
Volts	**hp**	**14**	**12**	**10**	**8**	**6**	**4**	**2**	**0**	**00**
115	0.5	65	100	160	260	410	660	1050	1680	
230	0.5	300	480	760	1210	1930	3060	4870		
230	0.75	190	300	470	750	1190	1890	3010	4800	
230	1.0	140	220	350	560	890	1420	2260	3600	4540
230	1.5	130	210	330	520	830	1320	2110	3360	4230

6. Splicing the cable

Splice the drop cable with the motor cable. If the splice is carefully made, it will be as efficient as any other portion of the cable and will be completely watertight.

There are a number of cable splicing kits available today - epoxy-filled, rubber-sealed, etc. Many perform well if the manufacturer's directions are followed carefully. If one of these kits is not used, we recommend the following method for splicing the motor cable to the drop cable:

1. Examine the motor cable and the drop cable carefully for damage.
2. Cut the motor leads off in a staggered manner.
3. Cut the ends of the drop cable so that the ends match up with the motor leads.
   Be sure to match the colors.
4. Strip back and strip off one inch of insulation from each lead, making sure to scrape the wire bare to obtain a good connection.
   Be careful not to damage the copper conductor when stripping off the insulation.
5. Insert a properly sized Sta-Kon™-type connector on each pair of leads, again making sure that colors are matched.
   Using Sta-Kon™ crimping pliers, indent the lugs. Be sure to squeeze down hard on the pliers, particularly when using large cable.
6. Form a piece of electrical putty tightly around each Sta-Kon™. The putty should overlap on the insulation of the wire.
7. Use a good quality tape such as #33 Scotch Waterproof or Plymouth Rubber Company Slipknot Grey. **Wrap each wire and joint tightly for a distance of about 2½ inches on each side of the joint. Make a minimum of four passes over each joint and overlap each pass approximately one inch to ensure a completely watertight seal.**

Note: Do not lower or lift the pump using the motor cable.

7. Fitting the cable plug to the motor

The cable plug supplied with the motor is factory-greased. Check that the plug is greased correctly, see fig. 5.

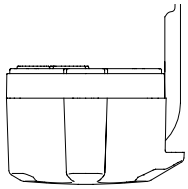

TM02 9604 3504

Fig. 5 Greasing of plug

To fit the cable plug, proceed as follows:

1. Check that the cable is of the correct type, cross-section and length.
2. Check that the mains on the location has correct connection to ground.
3. Check that the motor socket is clean and dry.
4. Press the cable plug onto the motor socket.
   The plug will only fit one way, see fig. 6.
5. Fit and tighten the four screws, see fig. 6.
   When the plug has been fitted, there must not be a clearance between the motor and the cable plug.

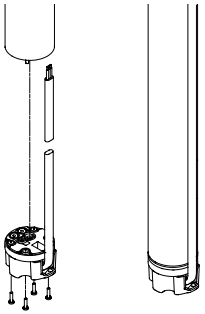

TM02 9605 3504

Fig. 6 Fitting the cable plug

US

8. Fitting the cable guard

To fit the cable guard, proceed as follows:

1. Make sure that the motor lead lies flat in the cable guard.
2. Place the cable guard in the groove in the cable plug. The two flaps must engage with the upper edge of the pump sleeve, see fig. 7.

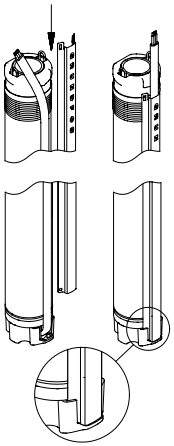

TM02 9613 3504

Fig. 7 Placing the cable guard

3. Fasten the cable guard to the pump suction strainer with the two self-tapping screws supplied, see fig. 8.

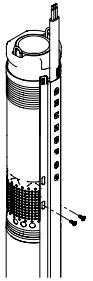

TM01 4427 0299

Fig. 8 Fitting the cable guard to the pump suction strainer

9. Piping

- The pump should only be gripped by the two flats at the top of the pump, see fig. 9.
- The pump can be installed vertically or horizontally. During operation, the pump must always be completely submerged in water.
- When plastic pipe is used, a stainless steel safety wire is recommended for lowering and lifting the pump. Fasten the wire to the eyelet on the pump, see fig. 10.
- The threaded joints must be well cut and fit together tightly to ensure that they do not work loose.

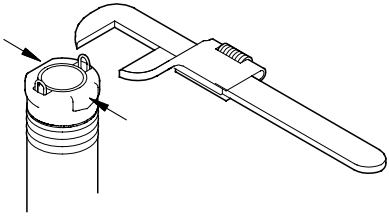

TM02 8739 0804

Fig. 9 Gripping the pump

10. Installing the pump

10.1 Installation depth

The dynamic water level should always be above the pump, see fig. 10.

A = Dynamic water level

B = Static water level

C = Minimum 3 inch well diameter

D = Drawdown

E = Installation depth below static water level. Maximum 500 feet.

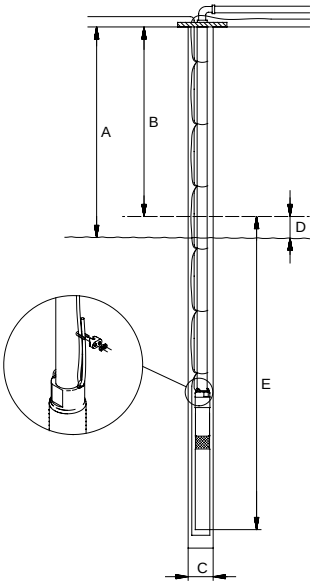

TM02 8740 0804

Fig. 10 Installation depth

Procedure:

To install the pump, proceed as follows:

1. Attach the enclosed data plate sticker at the well head.
2. Check the well for proper clearance. The well must be at least 3 inches in diameter. It is a good idea to check the well for clearance using a plumb ring (2.95 ø x 10 in.).
3. Attach the first section of riser pipe to the pump.
4. Lower the pump into the well. Make sure the motor cable is not damaged when the pump is lifted or lowered into the well, especially in 3 inch wells. **Note:** Do not lower or lift the pump using the motor cable.
5. When the pump has been installed to the required depth, the installation should be finished by means of a well seal.
   Note that the dynamic water level should always be above the pump.
6. Loosen the safety wire so that it becomes unloaded and lock it to the well seal using a cable clamp.
7. Complete the electrical connections.

Note: The pump must never be connected to a capacitor or to another type of control box than CU 300 or CU 301.

Installation depths:

Maximum installation depth:
500 feet below the static water level.

Minimum installation depth:
1.75 feet below the dynamic water level.

Vertical installation:

During start-up and operation, the pump must always be completely submerged in water.

Horizontal installation:

The pump must be installed at least 1.75 feet below the dynamic water level.

If there is a risk that the pump might be covered by mud, the pump must always be placed in a flow sleeve.

Note: Do not lower or lift the pump using the motor cable.

11. Generator operation

It is safe to operate the SQ/SQE with a generator.

The generator must be sized 50% above the P1 (input power) values of the pump. See the following table.

Motor [hp]	Min. generator size [W]	Recommended generator output [W]
0.5	1200	1500
0.75	1900	2500
1.0	2600	3200
1.5	2800	3500

US

12. Starting the pump for the first time

When the pump has been connected correctly, the pump should be started with the discharge valve closed approximately one third.

Due to the soft start feature, the pump takes approximately 2 seconds to develop full pressure.

12.1 Motor cooling and other considerations

- Make sure the well is capable of yielding a minimum quantity of water corresponding to the pump capacity.
- Do not start the pump until it is completely submerged in the liquid.
- As the valve is being opened, the drawdown should be checked to ensure that the pump always remains submerged.
- To ensure the necessary cooling of the motor, the pump should never be set so low that it gives no water.
  If the flow rate suddenly falls, the reason might be that the pump is pumping more water than the well can yield. The pump must immediately be stopped and the fault corrected.

12.2 Impurities in the water

If there are impurities in the water, the valve should be opened gradually as the water becomes clearer. The pump should not be stopped until the water is clean, otherwise the pump parts and the check valve may become clogged.

When the water is clean, the valve should be fully opened.

12.3 Minimum flow rate

To ensure the necessary cooling of the motor, the pump flow rate should never be set to a value lower than 0.2 gpm.
If the flow rate suddenly falls, the reason might be that the pump is pumping more water than the well can yield. The pump must immediately be stopped and the fault corrected.

Note: The pump's dry-running protection is effective only within the recommended duty range of the pump.

Note: Do not let the pump run against a closed discharge valve for more than 5 minutes. When the discharge valve is closed, there is no cooling flow and there is a risk of overheating in motor and pump.

12.4 Built-in protection

The motor incorporates an electronic unit which protects the motor in various situations.

- In case of overload, the built-in overload protection will stop the pump for 5 minutes. After that period, the pump will attempt to restart.
- If the pump has been stopped as a result of dry running, it will start automatically after 5 minutes.
- If the pump is restarted and the well has not recovered, the pump will stop after 30 seconds.

12.5 Resetting the pump

Switch off the electricity supply for 1 minute.

The motor is protected against the following conditions:

- dry running
- voltage surges (up to 6000 V)
  In areas with high lightning intensity, external lightning protection is required.
- overvoltage
- undervoltage
- overload
- overtemperature.

12.6 MS 3 motors

Note: All MS 3 motors are factory-set to detect dry-running conditions.

Check that the combination of pump and motor corresponds to the data on page 39.

12.7 MSE 3 motors

Note: All MSE 3 motors are factory-set to detect dry-running conditions. However, if the maximum pump speed setting is changed, the dry running stop value must also be changed. Please refer to either the CU 301 or CU 300 I&O for instructions on this procedure.

12.8 Maintenance and service

The pumps are normally maintenance-free.

Deposits and wear may occur. For that purpose, service kits and service tools are available from Grundfos.
The Grundfos Service Manual is available on request.

The pumps can be serviced at a Grundfos service center.

13. Assembly of pump and motor

To assemble pump end and motor, proceed as follows:

1. Place the motor horizontally in a vice and tighten it, see fig. 12.
2. Pull the pump shaft out to the position shown in fig. 11.

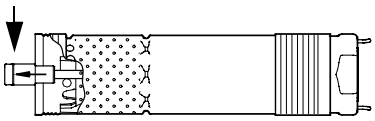

Fig. 11 Pump shaft position

3. Grease the motor shaft end with the grease supplied with the motor.
4. Screw the pump end on the motor (55 Nm).
   Note: The pump shaft must engage with the motor shaft.
   A spanner may be used on the clamping faces of the pump end, see fig. 12.
5. Fit the cable guard as described in section *8*.

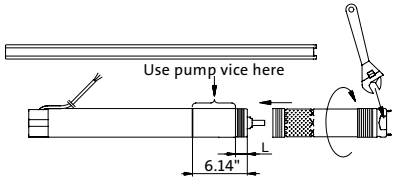

Fig. 12 Pump in vice

0.5 hp: L = 4.7".
0.75 hp: L = 4.0".
1.0 hp: L = 2.6".
1.5 hp: L = 2.6".

When pump end and motor have been assembled correctly, there must be no clearance between pump end and motor.

To disassemble, reverse procedure.

US

14. Troubleshooting

Fault	Cause	Remedy
1. The pump does not run.	a) The fuses are blown.	Replace the blown fuses. If the new fuses blow too, check the electrical installation and the drop cable.
	b) The GFI circuit breaker has tripped.	Reset the circuit breaker.
	c) No electricity supply.	Contact the electricity provider.
	d) The motor protection has cut off the electricity supply due to overload.	Check for motor/pump blockage.
	e) The drop cable is defective.	Repair or replace the pump/cable.
	f) Overvoltage has occurred.	Check the electricity supply.
2. The pump runs but gives no water.	a) The discharge valve is closed.	Open the valve.
	b) No water or too low water level in well.	Increase the installation depth of the pump, throttle the pump or replace it with a smaller capacity model.
	c) The check valve is stuck in its closed position.	Pull the pump and clean or replace the valve.
	d) The suction strainer is closed.	Pull the pump and clean the strainer.
	e) The pump is defective.	Repair or replace the pump.
3. The pump runs at reduced capacity.	a) The drawdown is larger than anticipated.	Increase the installation depth of the pump, throttle the pump or replace it with a smaller capacity model.
	b) The valves in the discharge pipe are partly closed/blocked.	Check and clean or replace the valves as necessary.
	c) The discharge pipe is partly choked by impurities (iron bacteria).	Clean or replace the discharge pipe.
	d) The check valve of the pump is blocked.	Pull the pump and clean or replace the valve.
	e) The pump and the riser pipe are partly choked by impurities (iron bacteria).	Pull the pump. Check and clean or replace the pump, if necessary. Clean the pipes.
	f) The pump is defective.	Repair or replace the pump.
	g) Hole in discharge pipe.	Check and repair the piping.
	h) The riser pipe is defective.	Replace the riser pipe.
	i) Undervoltage has occurred.	Check the electricity supply.
4. Frequent starts and stops.	a) The differential of the pressure switch between the start and stop pressures is too small.	Increase the differential. However, the stop pressure must not exceed the operating pressure of the pressure tank and the start pressure should be high enough to ensure sufficient water supply.
	b) The water level electrodes or level switches in the reservoir have not been installed correctly.	Adjust the intervals of the electrodes/level switches to ensure suitable time between the cutting-in and cutting-out of the pump. See installation and operating instructions for the automatic devices used. If the intervals between start/stop cannot be changed via the automatics, the pump capacity may be reduced by throttling the discharge valve.
	c) The check valve is leaking or stuck half-open.	Pull the pump and clean or replace the check valve.
	d) The supply voltage is unstable.	Check the electricity supply.
	e) The motor temperature is too high.	Check the water temperature.

14.1 Instruments not allowed

Note: The use of the following instruments is not allowed during troubleshooting.

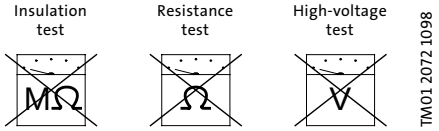

Fig. 13 Instruments not allowed

Note: When measuring, use RMS instruments.

15. Checking of motor and cable

1. Supply voltage 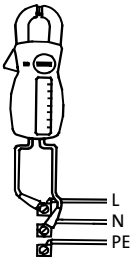 	Measure the voltage L1 (RMS) between phase and L2. Connect the voltmeter to the terminals at the connections.	The voltage should, when the motor is loaded, be within the range specified in section *4. Electrical connection*. Large variations in supply voltage indicate poor electricity supply, and the pump should be stopped until the problem has been corrected.
2. Current consumption  	Measure the current (RMS) while the pump is operating at a constant discharge head (if possible, at the capacity where the motor is most heavily loaded). For maximum current, see motor nameplate.	If the current exceeds the full-load current, there are the following possible faults: • Poor connection in the leads, possibly in the cable joint. • Too low supply voltage, see item 1.

16. Environment

During handling, operation, storage and transport, all environment regulations dealing with the handling of hazardous materials must be observed.

When the pump is taken out of operation, it must be ensured that no hazardous material is left in the pump and in the riser pipe, which can be injurious to persons and the environment.

17. Disposal

Disposal of this product or parts of it must be carried out according to the following guidelines:

1. Use the local public or private waste collection service.
2. If such waste collection service does not exist or cannot handle the materials used in the product, please deliver the product or any hazardous materials from it to your nearest Grundfos company or service center.

US

18. Technical data

Supply voltage

1 x 90-120 V –10%/+6%, 50/60 Hz, PE.

1 x 200-240 V –10%/+6%, 50/60 Hz, PE.

Operation via generator

Recommended generator output must be equal to P1 [kW] + 50% and minimum P1 + 10%.

Starting current

The motor starting current is equal to the highest value stated on the motor nameplate.

Starting

Soft starting.

Run-up time

Maximum 2 seconds.

Motor protection

The motor is protected against dry running, overvoltage, undervoltage, overload and overtemperature.

Power factor

PF = 1.

Service factor

0.5 hp: 1.85 at 115 V/230 V.
0.75 hp: 2.05 at 230 V.
1.0 hp: 2.25 at 230 V.
1.5 hp: 1.65 at 230 V.

Motor cable

3 Wire, 14 AWG XLPE.
Length: 5 feet.

Motor liquid

Type SML 2.

pH values

5 to 9.

Liquid temperature

The temperature of the pumped liquid must not exceed 104°F.

Note: If liquids with a viscosity higher than that of water are to be pumped, please contact Grundfos.

Discharge port

5 SQ/SQE: 1" NPT.

10-15 SQ/SQE: 1¼" NPT.

22-30 SQ/SQE: 1½" NPT.

Storage conditions

Minimum ambient temperature: 4°F.
Maximum ambient temperature: 140°F.

Freeze protection

Note: The motor must not be stored without being filled with motor liquid.

If the pump has to be stored after use, it must be stored on a frost-free location or it must be ensured that the motor liquid is frost-proof.

Operating conditions

Minimum ambient liquid temperature: 32°F.
Maximum ambient liquid temperature: 104°F.

Motor dimensions (MS 3 and MSE 3)

0.5 hp: 20.9" length x 2.68" diameter.
0.75 hp: 20.9" length x 2.68" diameter.
1.0 hp: 22.3" length x 2.68" diameter.
1.5 hp: 22.3" length x 2.68" diameter.

Motor weights (MS 3 and MSE 3)

0.5 hp: 6.0 lbs.
0.75 hp: 7.1 lbs.
1.0 hp: 8.2 lbs.
1.5 hp: 8.2 lbs.

Pump end dimensions

Pump diameter: 2.68".
Pump diameter, incl. cable guard: 2.91".

Pump end dimensions (min. and max.)

5 SQ/SQE: 10.6" to 18.0".
10 SQ/SQE: 10.6" to 14.8".
15 SQ/SQE: 10.6" to 16.9".
22 SQ/SQE: 10.6" to 16.9".
30 SQ/SQE: 10.6" to 13.7".

Pump end weights (min. and max.)

All SQ/SQE models: 2.2 lbs to 3.5 lbs.

Well diameter

Minimum 3".

Installation depth

Maximum 500 feet below static water level.

Subject to alterations.

Pump models

Pump type	Power P_2 [hp]	Voltage [V]	Flow range [gpm]	Min. well dia.	Disch.
5SQ/SQE-90	0.5	230/115	1.5-7.5	3"	1" NPT
5SQ/SQE-140	0.5	230/115	1.5-7.5	3"	1" NPT
5SQ/SQE-180	0.5	230/115	1.5-7.5	3"	1" NPT
5SQ/SQE-230	0.75	230	1.5-7.5	3"	1" NPT
5SQ/SQE-270	0.75	230	1.5-7.5	3"	1" NPT
5SQ/SQE-320	0.75	230	1.5-7.5	3"	1" NPT
5SQ/SQE-360	1.0	230	1.5-7.5	3"	1" NPT
5SQ/SQE-410	1.0	230	1.5-7.5	3"	1" NPT
5SQ/SQE-450	1.5	230	1.5-7.5	3"	1" NPT
10SQ/SQE-110	0.5	230/115	3-15	3"	1¼" NPT
10SQ/SQE-160	0.5	230/115	3-15	3"	1¼" NPT
10SQ/SQE-200	0.75	230	3-15	3"	1¼" NPT
10SQ/SQE-240	0.75	230	3-15	3"	1¼" NPT
10SQ/SQE-290	1.0	230	3-15	3"	1¼" NPT
10SQ/SQE-330	1.5	230	3-15	3"	1¼" NPT
15SQ/SQE-70	0.5	230/115	4-20	3"	1¼" NPT
15SQ/SQE-110	0.5	230/115	4-20	3"	1¼" NPT
15SQ/SQE-150	0.75	230	4-20	3"	1¼" NPT
15SQ/SQE-180	0.75	230	4-20	3"	1¼" NPT
15SQ/SQE-220	1.0	230	4-20	3"	1¼" NPT
15SQ/SQE-250	1.0	230	4-20	3"	1¼" NPT
15SQ/SQE-290	1.5	230	4-20	3"	1¼" NPT
22SQ/SQE-40	0.5	230/115	7-33	3"	1½" NPT
22SQ/SQE-80	0.5	230/115	7-33	3"	1½" NPT
22SQ/SQE-120	0.75	230	7-33	3"	1½" NPT
22SQ/SQE-160	1.0	230	7-33	3"	1½" NPT
22SQ/SQE-190	1.0	230	7-33	3"	1½" NPT
22SQ/SQE-220	1.5	230	7-33	3"	1½" NPT
30SQ/SQE-40	0.5	230/115	8-42	3"	1½" NPT
30SQ/SQE-90	0.75	230	8-42	3"	1½" NPT
30SQ/SQE-130	1.0	230	8-42	3"	1½" NPT

Accessories

Product	Part number
CU 300	96422776
CU 301	96436754
Flow sleeve	96037505
Grease	96037562
Flow switch	96022967
Pressure transmitter	96026030

U.S.A.

GRUNDFOS Pumps Corporation
17100 West 118th Terrace
Olathe, Kansas 66061
Phone: +1-913-227-3400
Telefax: +1-913-227-3500

Canada

GRUNDFOS Canada Inc.
2941 Brighton Road
Oakville, Ontario
L6H 6C9
Phone: +1-905 829 9533
Telefax: +1-905 829 9512

Mexico

Bombas GRUNDFOS de Mexico
S.A. de C.V.
Boulevard TLC No. 15
Parque Industrial Stiva
Aeropuerto
Apodaca, N.L. 66600
Mexico
Phone: +52-81-8144 4000
Telefax: +52-81-8144 4010

Addresses revised 18.04.2002

L-SP-TL-017 R 5/06	US
PRINTED IN USA	

APPENDIX T4

Pump Control Panel
(Wiring Diagram and Basin Information)

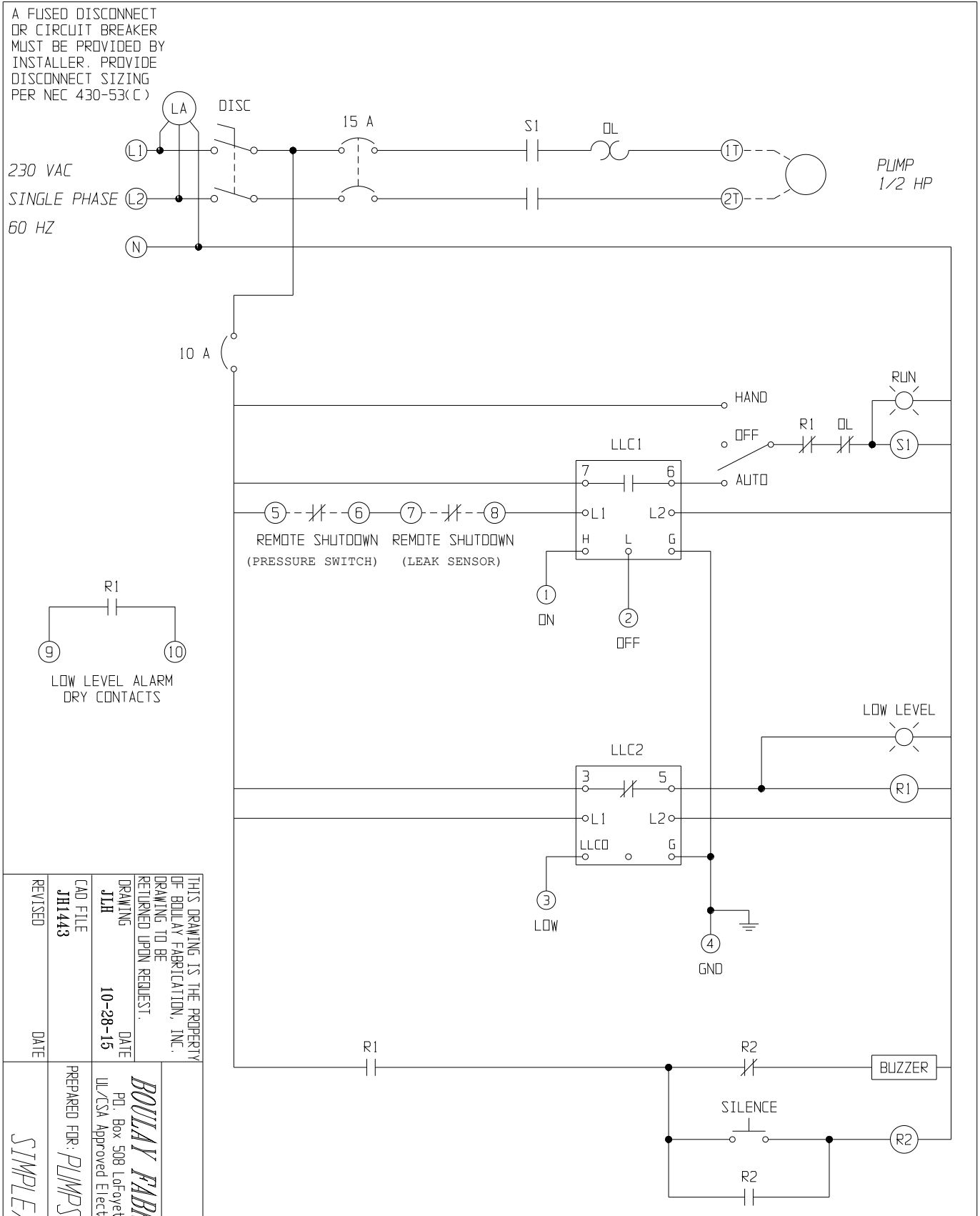

THIS DRAWING IS THE PROPERTY OF BOULAY FABRICATION, INC. DRAWING TO BE RETURNED UPON REQUEST.

DRAWING JLH DATE 10-28-15

CAD FILE JH1443

REVISED DATE

ORDER

BOULAY FABRICATION, INC.

P.O. Box 508 LaFayette N.Y. 13084 Phone 315-677-5247

UL/CSA Approved Electrical Control Panels Fax 315-677-5325

PREPARED FOR: PUMPS OF OKLAHOMA

SIMPLEX CONTROL PAGE 1 OF 2

ENCLOSURE LAYOUT

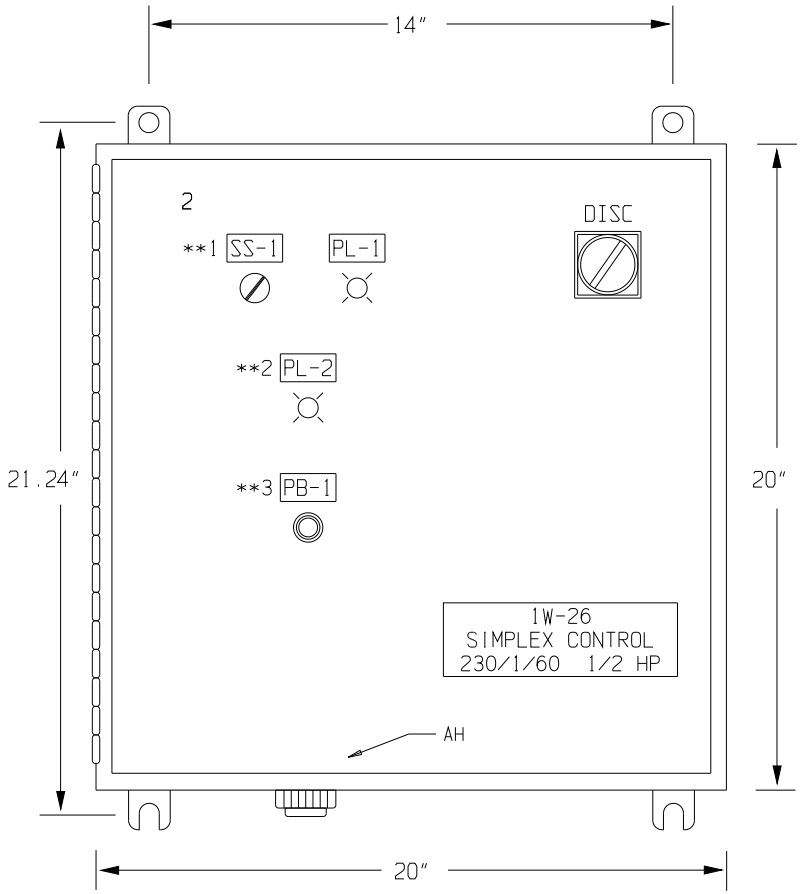

**1 PUMP HAND-OFF-AUTO RUN

**2 LOW LEVEL

**3 SILENCE

PANEL LAYOUT

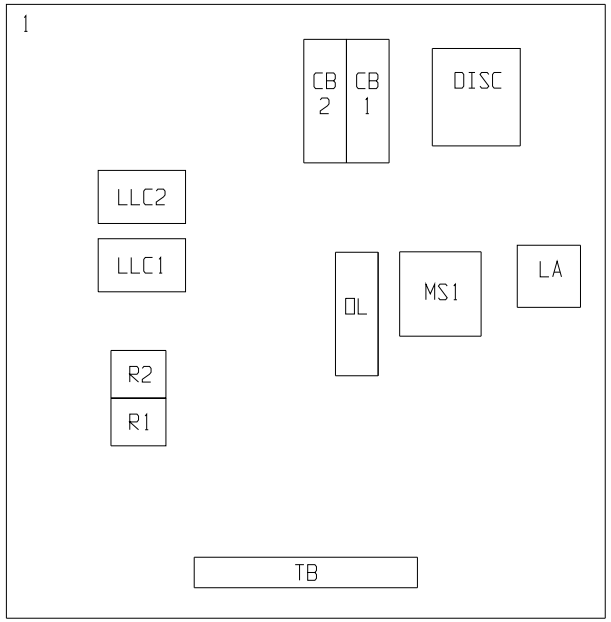

BILL OF MATERIALS

ITEM	QTY.	MFGR. CAT. NUMBER	DESCRIPTION
DISC	1	ABB DT40F3	MAIN DISCONNECT
CB1	1	EATON QCR2015	CIRCUIT BREAKER: PUMP
CB2	1	EATON QCR1010	CIRCUIT BREAKER: CONTROL
MS1	1	ABB DP30C2P	MOTOR CONTACTOR
OL	1	SIEMENS 48DA18AA4	OVERLOAD RELAY
LA	1	SQUARE D SDSA1175	LIGHTNING ARRESTOR
LLC1,2	2	WARRICK CONTROLS DFC1A0	LEVEL CONTROL RELAYS
R1,2	2	SKY SKAP=3C	CONTROL RELAYS
SS1	1	SQUARE D ZB5AG1	SWITCHES: H-O-A WITH KEY
PL1	1	SQUARE D ZB5AV033	GREEN PILOT LIGHTS: RUN
PL2	1	SQUARE D ZB5AV043	RED PILOT LIGHTS: LOW LEVEL
PB1	1	SQUARE D ZB5AA3	GREEN PUSH BUTTON: HIGH LEVEL SILENCE
AH	1	FLOYD BELL MC-09-201-Q	ALARM BUZZER
1	1	HOFFMAN A20P20	PANEL
2	1	HOFFMAN A20H20ALP	NEMA 4 ENCLOSURE
NOT SHOWN	1	HOFFMAN AHCI10E	CORROSION INHIBITOR SHIPPED LOOSE

THIS DRAWING IS THE PROPERTY OF BOULAY FABRICATION, INC. DRAWING TO BE RETURNED UPON REQUEST.

DRAWING JLH DATE 10-28-15

CAD FILE JH1443

REVISED DATE

ORDER

BOULAY FABRICATION, INC.
P.O. Box 508 LaFayette N.Y. 13084 Phone 315-677-5247
UL/CSA Approved Electrical Control Panels Fax 315-677-5325

PREPARED FOR: PUMPS OF OKLAHOMA

SIMPLEX CONTROL PAGE 2 OF 2

Level Control Board

Gems Sensors & Controls

Warrick

Series DF

Series DF Dual Function Control

Part No.	DFC1A0
Unit Price	$166.00
Lead Time (Days)	10 Days



Image is of actual product

Model	DF
Mode of Operation	Direct
Sensitivity	26 K
Control Style	Open Board
Socket Style	N/A
Standoff Style	1/16" Panel
Enclosure	None
Contact Design	1 Normally Open & 1 Normally Closed (non-powered)
Contact Rating	10 Amp Resistive 1/3 horse power
Secondary Voltage	12 VAC
Terminal Style	Spade Connection
Number of Channels	1
Minimum Temperature (°F)	-40
Maximum Temperature (°F)	150
Protection	Non-Intrinsically Safe
Approvals	UL 508 General Pupose UL 353 for use in Boilers
Minimum Qty (per Release)	1
Weight (Lbs)	0.7

Options

Level Sensor (multiple sensors per well)

Series 3W – Wire Suspended Probes

- Metallic Bars
- Plastic Shield Protected
- Adaptable to Many Fittings
- Field Assembled

Series 3W probes, consisting of metallic bars within a protective plastic shield, are designed to be suspended in liquid with PVC-insulated wires. They are ideal for applications where rigid electrode rods are impractical or cumbersome, such as:

- Deep Wells
- Pump Control
- Waste Water
- Deep Tanks

7/8″ (2.22 cm) diameter x 3-3/4″ (9.52 cm) length. 3Z1A wire and 3Z1B adaptor kit required for use with 3E, 3F and 3N fittings.



Series 3W

Components Detail

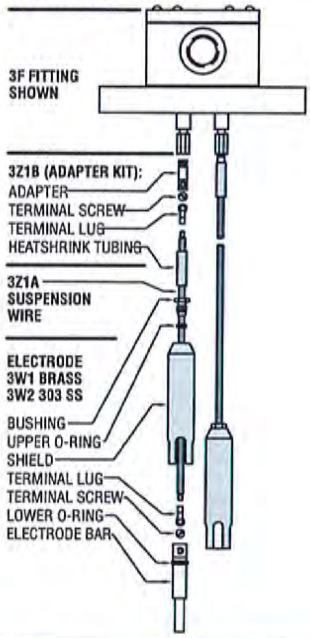

How to Order

Select a 3W electrode, a 3Z1B adaptor and a length of 3Z1A suspension wire to form a complete suspended probe.

1. 3W Electrodes

Probe Material	Part Number
Brass	3W1
316 Stainless Steel	3W2

2. 3Z1B Adaptor Kit
For use with 3E, 3F and 3N fittings.
Part Number: 3Z1B

3. 3Z1A Suspension Wire
Order in standard or custom length.

Length (Feet)	Part Number
500	100325-500
1000	100325-1000
5000	100325-5000
Custom	3Z1A-XX Specify in one foot increments up to 5000 ft.

Series 3Y – Corrosion Resistant Probes

- Metallic Bars
- Corrosion Resistant
- Available in Many Materials for Various Requirements
- Adaptable for Various Fittings

Series 3Y wire suspended probes consist of metallic bars within a protective plastic shield, designed to be suspended in liquid. Series 3Y suspension wires are PVC or Teflon® insulated for use in corrosive liquid applications. 7/8″ (2.22 cm) diameter x 3-1/2″ (8.90 cm) length.



Series 3Y

Specifications

Style	Wire suspended
Tip Material	Carp. 20, Hastelloy C, 316 stainless steel
Shield Material	PVC 150°F (66°C), Teflon®

How to Order

Use the **Bold** characters from the chart below to construct a product code.

3Y X X X

Series
3Y

Shield Material
1 – PVC
3 – Teflon®

Probe Tip Material
C – 316 Stainless Steel
D – Carp. 20
F – Hastelloy C

Length of Wire
1 – 10 feet
2 – 20 feet
3 – 30 feet
etc.

Note: 3Z1B Connector is used to connect suspension wire with 3B, 3E, 3F, 3G or 3N fitting.

Applications

- General Purpose
- Wire Suspended Probes
- Corrosive Liquids, Chemicals

General information
Selection guide
OT16F3 – OT160E3

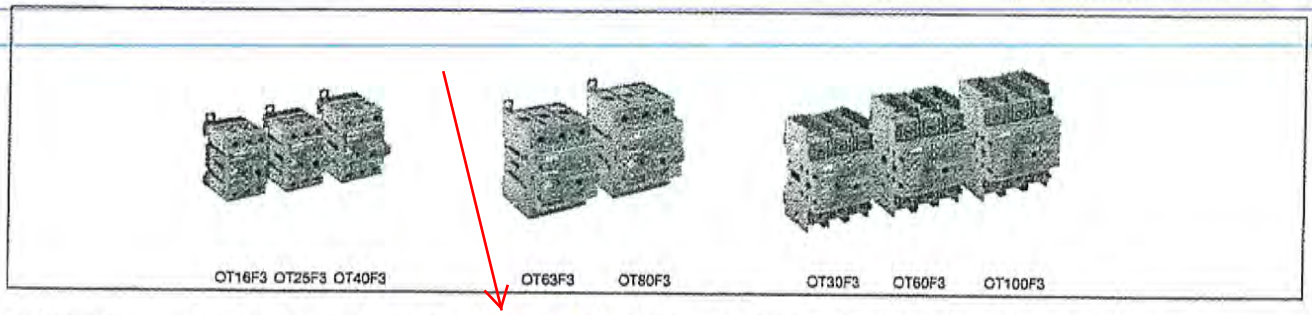

OT16F3 OT25F3 OT40F3 OT63F3 OT80F3 OT30F3 OT60F3 OT100F3

Catalog number	3 pole	OT16F3	OT25F3	OT40F3	OT63F3	OT80F3	OT30F3	OT60F3	OT100F3
General purpose amp rating	A	16	25	40	60	80	30	60	100
Approvals ①									
	2 pole	N/A	N/A	N/A	N/A	N/A	N/A	N/A	N/A
	3 pole	UL508	UL508	UL508	UL508	UL508	UL98	UL98	UL98
	4 pole	UL508	UL508	UL508	UL508	UL508	UL98	UL98	UL98
Technical ratings – UL,CSA ②									
Max operating voltage	V	600	600	600	600	600	600	600	600
Max horsepower rating									
Three phase									
240V	HP	5	7.5	10	15	20	10	20	30
480V	HP	10	15	20	30	40	20	40	50
600V	HP	10	20	25	30	40	30	40	50
Single phase									
120V	HP	1	1.5	2	2	2	2	3	5
240V	HP	2	3	5	5	5	5	7.5	15
Technical ratings – IEC②									
Rated insulation and operational voltage. AC20 and DC20	V	750	750	750	750	750	750	750	750
Rated thermal current, I_{th}									
AC 20/DC 20 open	A	25	32	40	63	80	40	63	115
AC 20/DC 20 enclosed	A	25	32	40	63	80	40	63	115
AC 21A ≤500V	A	16	25	32	63	80	40	63	100
≤690V	A	16	25	32	63	80	40	63	100
Rated operational power AC23									
400/415V	kW	7.5	9	11	22	37	15	18.5	37
690V	kW	7.5	9	11	15	18.5	15	15	37
Physical characteristics									
Weight ③ 3 pole	lb	0.24	0.24	0.24	0.59	0.59	0.79	0.79	0.79
Dimension 3 pole H	in	2.68	2.68	2.68	3.60	3.60	3.94	3.94	3.94
W	in	1.38	1.38	1.38	2.07	2.07	2.76	2.76	2.76
D	in	2.20	2.20	2.20	2.85	2.85	2.95	2.95	2.95
Accessories									
Terminal lug kit		Integral	Integral	Integral	Integral	Integral	Integral	Integral	Integral
Terminal shroud		•	•	•	•	•	•	•	•
Auxiliary contact		•	•	•	•	•	•	•	•
Shaft/handle diameter		6mm .24" x .24"	6mm .24" x .24"	6mm .24" x .24"	6mm .24" x .24"	6mm .24" x .24"	6mm .24" x .24"	6mm .24" x .24"	6mm .24" x .24"
Handle UL/NEMA type									
Type 1, 3R, 12		•	•	•	•	•	•	•	•
Type 1, 3R, 4, 4X, 12		•	•	•	•	•	•	•	•
Handle type									
Selector		•	•	•	•	•	–	–	–
Pistol		•	•	•	•	•	•	•	•
Recommended pistol handle length		45 - 65mm	45 - 65mm	45 - 65mm	45 - 65mm	45 - 65mm	45 - 65mm	45 - 65mm	45 - 65mm
Maximum recommended shaft length		290mm	290mm	290mm	290mm	290mm	290mm	290mm	290mm
Conversion kits									
6 pole		•	•	•	•	•	•	•	•
Transfer		•	•	•	•	•	•	•	•
Bypass		•	•	•	•	•	•	•	•
Mechanical interlock		•	•	•	•	•	•	•	•
Electrical interlock		–	–	–	–	–	–	–	–

• = Available
– = Not available

① UL listed switches are also CSA approved.
② For complete technical information please see page 18.38 – 18.70.
③ Switch only.

Selection information

Standard part number designation ①

Non-Fusible OT Switches (16 to 125A)

OT 16 F 3 C

Amperage
16 = 16 amps* 63 = 60 amps* 60 = 60 amps
25 = 25 amps* 80 = 80 amps* 100 = 100 amps
40 = 40 amps* 30 = 30 amps 160 = 125 amps

Number of Poles
3 = 3 poles 4 = 4 poles 6 = 6 poles

Special Configuration
C = Double throw switch

*** UL508 listed switches. OT30_, OT60_, OT100_, and OT160_ are cUL98 listed**

Non-Fusible OT Switches (200A and above)

OT 200 U 03 C

Amperage
200 = 200 amps 400 = 400 amps 600 = 600 amps

Number of Poles & Placement of Mechanism
02 = 2 poles to right of mechanism 04 = 4 poles to right of mechanism
03 = 3 poles to right of mechanism 40 = 4 poles to left of mechanism
30 = 3 poles to left of mechanism 22 = 2 poles to left, 2 poles to right of mechanism
12 = 1 pole to left, 2 poles to right of mechanism 13 = 1 pole to left, 3 poles to right of mechanism

Special Configuration
C = Double throw switch

All OT200_, 400_, and 600_ switches are cUL98 listed.

Selector Handles

OHB S 1 P H

Handle Color
B = black Y = Red/Yellow

Physical Size

Connection to Switch
A = external shaft P = snap on R = screw

Protection Class
H = 1 J= 1, 3R, 12

Pistol Handles

O H B 65 J 6 E011

Handle Color
B = Black Y = Red/Yellow M = Stainless Steel

Handle Length
65 = 65mm 80 = 80mm 125 = 125mm 145 = 145m 175 = 175mm 275 = 275mm

Environmental Rating
J = 1, 3R, 12 L = 1, 3R, 12, 4, 4X

Shaft Diameter
6 = 6mm 12 = 12mm

Special Configuration
E011 = 3 position double throw handle

① Part designation keys are provided for reference only. Not all variations or configurations are available.

Description

Built and Listed to UL 489

Type QCR and QCF Circuit Breakers are UL listed Circuit Breakers that are suitable for use as branch circuit protectors.

Applications

QCR and QCF Circuit Breakers are only 1/2-inch wide per pole and are excellent for general purpose industrial applications where space savings is required.

Product Features and Ratings

- 1/2-inch wide per pole
- Cable-in/Cable-out
- Black cases with black handles
- Three position handle: ON, Tripped (center), OFF
- Thermal-Magnetic Protection
- UL File E7819
- CSA File LR48907
- One, two and three pole
- 10 kAIC at 120/240 Vac, 10-60 Amperes
- 22 kAIC at 120/240 Vac, 15-20 Amperes
- 10 kAIC at 240 Vac, 10-30 Amperes
- 3 kAIC at 62.5 Vdc (1 Pole)
- 3 kAIC at 130 Vdc (2 Poles in Series)
- Normal Operating Environment: 0-40°C 5-95% Humidity (Non-Condensating)

Additional Ratings

In addition to the ratings shown for the 1/2-inch wide QCR and QCF, the complete QC breaker line includes:

- 1-4 Poles
- 5-100 Amperes
- 10 through 65 kAIC
- 120/240 and 240 Vac
- 1-inch per pole

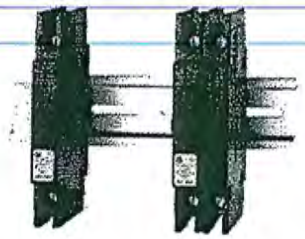

1-Pole *2-Pole*

QCR (Rear-Mounted Breakers)



1-Pole *2-Pole*

QCF (Front-Mounted Breakers)



3-Pole

QCR (Rear-Mounted Breakers)

Type QCR have as a standard feature provisions for 35mm DIN-Rail rear mounting with a spring-loaded release. Optional clips for individual mounting are available as a separate accessory.



3-Pole

QCF (Front-Mounted Breakers)

Type QCF have two threaded steel inserts to facilitate front mounting with #6-32 steel screws. The clamp type terminals accessible from the rear of the breaker so that cables can be accessed without removal of the breaker from the front cover.



QCR 1-Pole Breaker with QCRMTGFT Clips (Qty. 2) Individually Mounted



QCF Breaker Front Panel Mounted

QUICKLAG Industrial Circuit Breakers Cable-in/Cable-out (1/2 inch per pole)

Breaker Catalog Numbers①②③④

Continuous Ampere Rating at 40°C	QCR Breaker 10 kAIC Interruption Ratings⑤				QCF Breaker 10 kAIC Interruption Ratings⑤			
	120/240 Vac	120/240 Vac	240 Vac⑥		120/240 Vac	120/240 Vac	240 Vac⑥	
	1-Pole	2-Pole	2-Pole	3-Pole	1-Pole	2-Pole	2-Pole	3-Pole
QCR Breaker 10 kAIC Interruption Ratings⑤					**QCF Breaker 10 kAIC Interruption Ratings⑤**			
10	QCR1010 QCR1010T –	QCR2010 QCR2010T QCR2010P	– – –	– – –	QCF1010 QCF1010T –	QCF2010 QCF2010T –	– – –	– – –
15	~~QCR1015⑦~~ QCR1015T⑦ –	QCR2015 QCR2015T QCR2015P	QCR2015H QCR2015HT –	QCR3015H QCR3015HT –	QCF1015② QCF1015T⑦ –	QCF2015 QCF2015T –	QCF2015H QCF2015HT –	QCF3015H QCF3015HT –
20	QCR1020⑦ QCR1020T⑦ –	QCR2020 QCR2020T QCR2020P	QCR2020H QCR2020HT –	QCR3020H QCR3020HT –	QCF1020② QCF1020T⑦ –	QCF2020 QCF2020T –	QCF2020H QCF2020HT –	QCF3020H QCF3020HT –
25	QCR1025 QCR1025T –	QCR2025 QCR2025T QCR2025P	QCR2025H QCR2025HT –	QCR3025H QCR3025HT –	QCF1025 QCF1025T –	QCF2025 QCF2025T –	QCF2025H QCF2025HT –	QCF3025H QCF3025HT –
30	QCR1030 QCR1030T –	QCR2030 QCR2030T QCR2030P	QCR2030H QCR2030HT –	QCR3030H QCR3030HT –	QCF1030 QCF1030T –	QCF2030 QCF2030T –	QCF2030H QCF2030HT –	QCF3030H QCF3030HT –
35	QCR1035 –	QCR2035 QCR2035P	– –	– –	QCF1035 –	QCF2035 –	– –	– –
40	QCR1040 –	QCR2040 QCR2040P	– –	– –	QCF1040 –	QCF2040 –	– –	– –
45	QCR1045 –	QCR2045 QCR2045P	– –	– –	QCF1045 –	QCF2045 –	– –	– –
50	QCR1050 –	QCR2050 QCR2050P	– –	– –	QCF1050 –	QCF2050 –	– –	– –
55	QCR1055 –	QCR2055 QCR2055P	– –	– –	QCF1055 –	QCF2055 –	– –	– –
60⑧	QCR1060 –	QCR2060 QCR2060P	– –	– –	QCF1060 –	QCF2060 –	– –	– –
QCR Breaker 22 kAIC Interruption Ratings					**QCF Breaker 22 kAIC Interruption Ratings**			
15	QCRH1015② QCRH1015T⑦	QCRH2015 QCRH2015T	– –	– –	QCFH1015② QCFH1015T⑦	QCFH2015 QCFH2015T	– –	– –
20	QCRH1020⑦ QCRH1020T⑦	QCRH2020 QCRH2020T	– –	– –	QCFH1020⑦ QCFH1020T⑦	QCFH2020 QCFH2020T	– –	– –

Available QCR and QCF Breaker Accessories

Catalog Number	Description
QCRMTGFT	Steel mounting clip mounts QCR breaker if individual mounting is required. Quantity two required for 1- and 2-pole and four required for 3-pole breakers.
QCRFPL1P	Removable padlock device for single-pole QCR or QCF breaker.
QCRFPLMP	Removable padlock device for multi-pole QCR or QCF breaker.
QCRFLOFF	Padlock bracket assembly for QCR or QCF single or multi-pole breakers (off only).

① Standard breaker terminals are box type lugs.

② Breakers with "T" Catalog Number Suffix are suitable for line and load side ring terminal connection (#10-32 plus/minus terminal screw provided).

③ Breakers with "P" Catalog Number Suffix are suitable for terminating 2 #10 AWG Quick-Connect Type Terminals per phase on breaker load side.

④ Breakers with Shunt Trip Attachment (extra pole required on breaker right-hand side) are available. Contact Cutler-Hammer.

⑤ All ratings 15 to 60 amperes are HACR rated.

⑥ Breakers with "H" Catalog Suffix have 240 Vac construction.

⑦ All 15 and 20 ampere single-pole breakers are SWD (Switching Duty) rated for fluorescent lighting applications.

⑧ 60/75°C Cu/Al wire on all ratings except 60 amperes which requires Cu only conductor.

Definite purpose Contactors

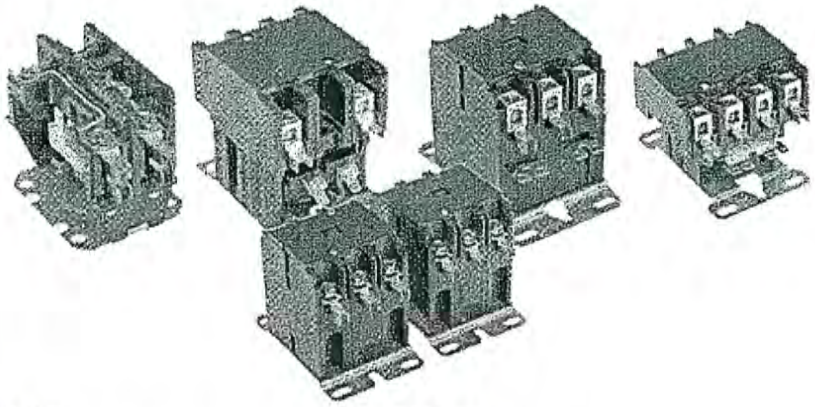

Applications

Type DP contactors provide high performance with flexibility and reliability, designed to match numerous applications including:

- Motors
- Power supplies
- Food service equipment
- Compressors
- Business machines
- Resistive heating
- Air conditioning
- Refrigeration equipment
- Welding

Agency approvals

- UL 508 Guide No. NLDX2, File # E224401
- CE/Semko Certified
- EN60947-4-1:1991
- IEC 947-4-1

Features

- Available as:
  - 30A, 1, 2, 3 or 4 pole
  - 40A, 1, 2, 3 or 4 pole
  - 60A, 3 pole
- Industry standard mounting plate provides easily accessible mounting holes
- Coil terminals are provided with #6-32 screws and (1) .250 quick connect or dual .250 quick connect terminals
- Exclusive hex, slotted, phillips #10-32 terminal screws for main terminals
- Coil is Class B (130° C) Insulation system with wide range of voltages and 50/60 Hz ratings
- Double E Magnet Assembly provides optimal performance with reduced power consumption
- Snap-in auxiliary switch with 1 SPDT or 2 SPDT contacts available as an option
- 1 NO & 1 NC auxiliary contact block with 600 VAC rating available as an option
- Base assembly is made from high arc-resistant plastic

Catalog number explanation

DP 30 C 3P - 1 /B

- **DP** — Definite purpose
- **30** — Frame size: 30 = 30A, 40 = 40A, 60 = 60A
- **C** — Contactor type: C = Non-reversing
- **3P** — Power poles: 1P = 1 NO, 2P = 2 NO, 3P = 3 NO, 4P = 4 NO
- **1** — Coil voltage (See coil voltage selection chart)
- **/B** — Bulk pack quantities

30A, 40A & 60A
1, 2, 3, & 4 Pole


DP30C3P-F


DP40C4P-F

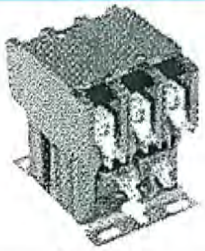
DP60C3P-F

30A, 40A & 60A

Full load amps	No. of poles	Locked motor amps 240/277V	480V	600V	Resistive amps	Maximum HP 1 phase 120V	240V	Maximum HP 3 phase 200/208V	240/277V	480V	600V	Individual pack Catalog number	List price	Bulk pack ①	Bulk pack Catalog number	Bulk pack List price
30	1	150	75	50	40	1	2	—	—	—	—	DP30C1P-F	$ 30	50	DP30C1P-F/B	$ 27
30	2	150	125	100	40	2	3	—	—	—	—	DP30C2P-F	38	50	DP30C2P-F/B	34
30	3	180	150	120	40	2	5	10	10	15	20	DP30C3P-F	55	25	DP30C3P-F/B	50
30	4	180	150	120	40	2	5	10	10	10	—	DP30C4P-F	75	25	DP30C4P-F/B	68
40	2	240	200	160	50	2	3	—	—	—	—	DP40C2P-F	46	50	DP40C2P-F/B	42
40	3	240	200	160	50	3	7.5	10	10	20	25	DP40C3P-F	60	25	DP40C3P-F/B	54
40	4	240	200	160	50	3	7.5	10	10	10	—	DP40C4P-F	100	25	DP40C4P-F/B	90
60	3	360	300	240	75	2	10	25	25	30	30	DP60C3P-F	147	—	—	—

Coil voltage selection chart

Voltage	24VAC	120VAC	208/240VAC	277VAC	480VAC	575VAC
Suffix #	F	1	2	C	4	5

Coil voltage selection

All catalog numbers include a 24VAC coil. To select other coil voltages, substitute the code from the Coil Voltage Selection Chart for the first digit after the dash in the catalog number.

Auxiliary contact blocks (3 pole only)

Description	Catalog number 30A - 40A	Catalog number 60A	List price
NO or NC SPDT 1 NO & 1 NC	CADP40-10 CADP40-11	CADP60-10 —	$ 10

Contact rating of 1 NO & 1 NC

		120V	240V	480V	600V
Break	A	3.0	1.5	.75	.6
Make	A	30	15	7.5	6
Continous	A	10	10	10	10

Quick connect terminals on all auxiliary switches are .250 wide.

Contact rating of SPDT

Voltage	Current rating
125VAC	10A, 1/3 HP
120VAC	4A on lamp load
250VAC	10A, 1/3 HP
125VDC	.5A
250VDC	.25A

Ordering bulk quantities

To order bulk package quantities add "/B" to the end of the catalog number.

Example: For quantities of 25 of a 30A 3 pole contactor with 24VAC coil, the catalog number would be: DP30C3P-F/B

Mechanical interlock

Frame size		Catalog number	List price
DP30 DP40		VMDP-1	$ 7

① Must be ordered in standard pack quantities as shown. Add suffix "/B" to the catalog number.

Technical data
30A – 60A
1, 2, 3, & 4 Pole

30A – 40A — 1 & 2 pole

Coil technical data		DP30C1P				DP30, DP40C2P			
Nominal coil voltage		24	120	208/240	277	24	120	208/240	277
Maximum pickup volts		18	88	177	221	18	88	177	221
Drop-out volts range		6 – 15	20 – 70	40 – 170	50 – 165	6 – 15	20 – 70	40 – 140	50 – 165
Nominal inrush VA	50 Hz	31	31	35	31	22	22	22	22
Nominal inrush VA	60 Hz	28	28	32	28	20	20	20	20
Nominal sealed VA	50 Hz	6	6	7	6	5.5	5.5	5.5	5.5
Nominal sealed VA	60 Hz	5	5	6	5	4.5	4.5	4.5	4.5
Nominal DC resistance	Ohms	17.5	450	1800	2252	13	275	1056	1772

Other specifications	DP30C1P	DP30, DP40C2P
Line and load terminals	# 10 – 32 screw ①	Box lug ①
Wire size AWG min – max	16 – 8②	14 – 4 Cu/Al
Tightening torque (recommended)	22 in. lbs.	40 in. lbs
Coil termination	Dual .250 QC (2)	Dual .250 QC (2)
Quick connects .250 std. 1 – 1.5 pole	Quad	Quad
Quick connects .250 std. 2 pole	Dual or quad	Dual or quad
Covers	Standard	Standard
Insulation system	130° C Class B	130° C Class B

30A - 60A — 3 pole

Coil technical data		DP30, DP40C3P					DP60C3P				
Nominal coil voltage		24	120	208/240	277	480	24	120	208/240	277	480
Maximum pickup volts		18	88	177	220	384	18	93	177	235	374
Drop-out volts range		6 –15	20 – 70	40 – 140	65 – 185	150 – 270	6 – 15	20 – 70	40 – 135	50 – 180	150 – 286
Nominal inrush VA	50 Hz	65	65	65	65	65	140	140	140	140	140
Nominal inrush VA	60 Hz	60	60	60	60	60	132	132	132	132	132
Nominal sealed VA	50 Hz	7.5	7.5	7.5	7.5	7.5	20	20	20	20	20
Nominal sealed VA	60 Hz	6	6	6	6	6	14	14	14	14	14
Nominal DC resistance	Ohms	6.6	165	660	880	1320	2.4	45	180	280	852

Other specifications	DP30C3P	DP40C3P	DP60C3P
Line and load terminals	# 10 – 32 Screw ①	Box lug ①	Box lug ①
Wire size AWG min – max	16 – 8 ②	14 – 7 Cu/Al	14 – 2 Cu/Al
Tightening torque (recommended)	22 in. lbs	40 in.lbs	50 in. lbs
Quick connects: power terminals	Dual.250 QC	Dual.250 QC	Dual.250 QC
Coil terminals	Dual .250 QC (2)	Dual .250 QC (2)	#6 – 35 screw & .250 QC (2)
Covers	Standard	Standard	Standard
Insulation system	130° C Class B	130° C Class B	130° C Class B

30A – 40A — 4 Pole

Coil technical data		DP30, DP40C4P				
Nominal coil voltage		24	120	208/240	277	480
Maximum pickup volts		19.2	88	177	220	384
Drop-out volts range		6 – 15	20 – 70	40 – 140	65 – 185	150 – 270
Nominal inrush VA	50 Hz	68	68	58	58	48
Nominal inrush VA	60 Hz	60	60	55	52	52
Nominal sealed VA	50 Hz	14	14	11	11	11
Nominal sealed VA	60 Hz	9	9	9.5	9.5	9
Nominal DC resistance	Ohms	5	148	550	750	2100

Other specifications	DP30C4P	DP40C4P
Line and load terminals	# 10 – 32 screw ①	Box Lug
Wire size AWG Min – Max	16 – 8 ②	14 – 4 Cu/AL
Tightening torque (recommended)	22 in. lbs	40 in. lbs
Quick connects: power terminals	Dual .250 QC	Dual .250 QC
Coil terminals	Dual .250 QC (2)	Dual .250 QC (2)
Covers	Optional	Standard
Insulation system	130° C Class B	130° C Class B

① See page 1.82 to 1.85 for description and approximate dimensions.
② Stranding must be split for #8 wire.

Features

- **Solid State ESP100, 958 & 958L Overloads**
  - —Phase Loss Protection—Trips Within 3 Seconds
  - —Ambient Insensitive
  - —Heaterless Design
  - —Self-Powered
  - —±2% Repeat Trip Accuracy
  - —NEMA Class 10, 20 & 30 Trip Curves Available
  - —FLA Adjustment Dial with Wide Adjustment Range (Fig. 1)
  - —Short Circuit Self Protected
  - —Thermal Memory Circuit
  - —Conformally Coated Circuit Board
  - —-22°F to 159°F (-30°C to 70°C)
  - —NC Contact Rated NEMA A600, P600 (10 Amps 600VAC Max., 5 Amps 600VDC Max.)
  - —"Must Hold Amps" Adjustment Dial (958 only)
- **Ambient Compensated Bimetal Overloads**
  - —Automatic or manual reset adjustment.
  - —A manual test button is provided to test the operation of the 3 pole overload relay control contacts.
  - —±15% nominal trip current adjustment.
  - —Accept either standard Class 20 or Quick Trip (NEMA Class 10) heater elements without any other changes or adjustments.
  - —Available with a normally open contact for an alarm circuit (SPDT) up to 60A.
  - —Compensated bimetal overload relays provide a constant trip time in ambient temperatures from -20°F to +170°F for a given heater rating.
- UL Listed File #E22655 or Component Recognized
- CSA Certified File #LR6535
- **3RB10 Solid State Overload Relay**
  - —Marking Strip.
  - —Manual/automatic RESET selector switch.
  - —STOP button.
  - —1 NO and 1 NC contacts.
  - —Trip class 10 or 20.
  - —Test function and switch position indicator.
  - —4:1 current adjustment dial e.g. 200-540A.
  - —Phase loss protection.
  - —Self-powered.

Application

ESP100 Solid State Overloads

ESP100 solid state overload relays are self powered, requiring no separate 120V source to power the circuit board. They provide phase loss protection, fewer connection points and high repeat trip accuracy which results in longer motor life and cost savings. NEMA Class 10, 20 and 30 trip curves are available for a variety of applications.

The ESP100 solid state overload provides phase loss protection for the motor by tripping within three seconds upon complete loss of one phase of a three phase motor branch circuit.

Each overload has at least a 2:1 current adjustment range with the adjustment dial reading out in full load amps. In addition to the markings on the dial there are audible clicks which allow for extremely fine tuning.

The heaterless construction of these overloads minimizes energy costs and the costs of cabinet ventilation or cooling. Solid state overloads can be used at temperatures from -30°C to +70°C and are rated for 50Hz and 60Hz applications.

ESP100 panel mounted overloads can be used to upgrade existing starter applications where panel mounted thermal overloads are used. In addition, ESP100 overloads can be panel mounted when used with other types of controllers, such as DP, IEC contactors, and soft starts.

ESP100 overloads can be used on high voltage applications, making them ideal for use with vacuum contactors and other high voltage control.

ESP100 overloads can be retrofitted on existing contactors using the retrofit plate suffixes or on other brands using the plates listed in the competitive retrofit plates table on page 6/46.

958 ESP100 Special Use Solid State Overloads

958 ESP100 special use solid state overloads provide excellent protection of hermetically sealed compressors and artificially cooled motors which require ambient insensitivity and quick trip response times. Combined with a series lockout relay, they can provide unsurpassed protection for hermetically sealed compressor motors in air conditioning applications. The combination of high trip speed, current adjustment, and ease of installation makes it suitable for these applications. The trip curves have been custom tailored to provide proper overload protection on such loads without causing nuisance tripping.

958 overload dials denote must hold amps. Must trip amps are 112% of the must hold setting.

958L ESP100 Oil Field Solid State Overload Relays

958L ESP100 solid state overloads are designed specifically for the oil market and the cyclical loads experienced with these types of pumping applications. These overloads provide protection on all standard motors, oil well pump motors, multi-torque connections, and ultra-high slip motors.

Rotors can be damaged in 8 to 15 seconds during motor stall conditions if electrical power is not removed. To prevent damage during motor stall, the 958L solid-state overload removes power in 7 seconds at 250% locked rotor current. Therefore, die cast or fabricated rotors will be protected from damage saving the user both time and money.

Ambient Compensated Bimetal Overloads

These thermal type overload relays are used to protect motors from excessive heat resulting from sustained motor overloads, rapid motor cycling and stalled rotor conditions. Although these devices function based on thermal principles they are designed to compensate for the ambient air temperature surrounding the overload. This helps prevent the occurances of nuisance tripping when there are high surrounding ambient temperatures. The percentage of overload determines the length of time required to open the circuit.



ESP100 Solid State Overload

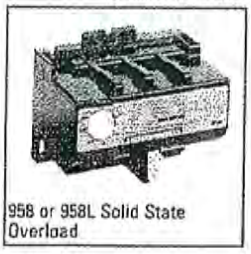

958 or 958L Solid State Overload

Figure 1

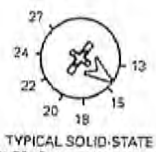

TYPICAL SOLID-STATE OVERLOAD ADJUSTMENT DIAL MARKINGS

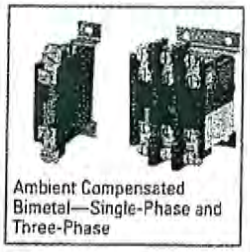

Ambient Compensated Bimetal—Single-Phase and Three-Phase

Selection



ESP100 Solid State Overload Relay



Ambient Compensated Bimetal 3 Phase Overload Relay

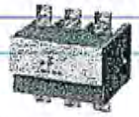

3RB10 Solid State Overload Relay

Ordering Information

- For Thermal Overloads, order heater elements by code number at **$11.60** each. See page 15-137.
- Technical Data see www.sea.siemens.com/controls.
- Field Modification Kits see page 6/71.
- Dimensions see page 6/97
- To retrofit existing Thermal Furnas Brand Starters with the ESP100 Solid State Overload Relay add the appropriate suffix to the end of the catalog number from the Retrofit Plates table shown below and also add **$12.80** to the list price. Example: 48ASE3M20**1P**

Solid State—Class 48 ESP100, 3 Phase, Single Phase

Full Load Amp Current Range	Phase	Frame① Size	Manual Reset Class 10 Catalog No	Price $	Manual Reset Class 20 Catalog No	Price $	Manual Reset Class 30 Catalog No	Price $
0.25–1	3	A	48ASA3M10		48ASA3M20		48ASA3M30	
0.75–3	3	A	48ASB3M10		48ASB3M20		48ASB3M30	
2.5–10	3	A	48ASD3M10		48ASD3M20		48ASD3M30	
9–18	3	A1	48ASE3M10		48ASE3M20		48ASE3M30	
13–27	3	A1	48ASF3M10		48ASF3M20		48ASF3M30	
20–40	3	A1	48ASG3M10		48ASG3M20		48ASG3M30	
13–27	3	B	48BSF3M10		48BSF3M20		48BSF3M30	
22–45	3	B	48BSH3M10		48BSH3M20		48BSH3M30	
30–60	3	B	48BSJ3M10		48BSJ3M20		48BSJ3M30	
45–90	3	B	48BSK3M10		48BSK3M20		48BSK3M30	
57–115	3	B	48BSL3M10		48BSL3M20		48BSL3M30	
67–135	3	B	48BSM3M10		48BSM3M20		48BSM3M30	
81–152②	3	B	48BSN3M10		48BSN3M20		48BSN3M30	
100–210③	3	A	48ASS3M10		48ASS3M20		48ASS3M30	
100–270③	3	A	48ASU3M10		48ASU3M20		48ASU3M30	
200–540②	3	A	48ASX3M10		48ASX3M20		48ASX3M30	
420–1220②	3	A	48CSZ3M10		48CSZ3M20		48CSZ3M30	
0.25-1	1	A	48ASA1M10		48ASA1M20		48ASA1M30	
0.75-3	1	A	48ASB1M10		48ASB1M20		48ASB1M30	
2.5-10	1	A	48ASD1M10		48ASD1M20		48ASD1M30	
5-15	1	A	48ASE1M10		48ASE1M20		48ASE1M30	

Solid State—3RB106, 3 Phase④

For Contactor Size	Setting Range Amps	Manual/Automatic Reset			Manual Reset Only			
		Class 10 Catalog No.	Price $	Class 20 Catalog No.	Price $	Class 10 Catalog No.	Price $	Class 20 Catalog No.	Price $
5	55-250	3RB1066-1GG0②		3RB1066-2GG0②		3RB1065-1GG0②		3RB1065-2GG0②	
6	200-540	3RB1066-1KG0②		3RB1066-2KG0②		3RB1065-1KG0②		3RB1065-2KG0②	
	300-630	3RB1066-1LG0②		3RB1066-2LG0②		3RB1065-1LG0②		3RB1065-2LG0②	

Ambient Compensated Bimetal—Open Type Class 48 Single Phase, 3 Phase

Poles	Amp Rating	Auxiliary Contacts	Contact Rating	Catalog No	Price $
1	25	1 NC	5A (B600) & 5A (P300)	48DA18AA4	
	50	1 NC		48GA18AA4	
	100	1 NC		48HA18AA4	
	180	1 NC		48JA18AA4	
3	30	1 NC	10A (A600) & 5A (P300)	48DC38AA4	
	30	1 NO/NC		48DC39AA4	
	60	1 NC		48GC38AA4	
	60	1 NO/NC		48GC39AA4	
	100	3 NC	5A (B600) & 5A (P300)	48HA38AA4	
	180	3 NC		48JA38AA4	

Retrofit Plates for Contactors, Class 48

Replacement for Starter Sizes	ESP100 Overload Frame Size	Retrofit Plate Suffix	Price Adder $
Size 00–1½	A or A1	1P	
Size 2, 2½	B	2P	
Size 3, 3½	B	3P	
Size 4	B	4P	

①To determine frame size of replacement solid state overload, refer to retrofit plates table above.
②Requires use of 600:5 Current Transformers-3 of 97CT008 **$110** each.
③Temperature rating –20° to 60°C.
④Requires use of 300:5 Current Transformers-3 of 97CT005 **$110** each.
⑤Requires use of 1200:5 Current Transformers-3 of 97CT012 **$110** each.
⑥Overload has busbar connections.
⑦Discount Code: SIRIUS 3R Contactors, OL's, MSP's.

SDSA1175 SPDs
Features

Superior Performance
Square D brand Surgelogic SDSA1175 SPDs utilize high-energy suppression circuitry that can be located at any point in the electrical system. As a Type 1 rated device, they have the flexibility to be used with or without an Overcurrent Protection Device (OCPD).

SDSA1175 SPDs provide surge suppression for equipment from severe transient activity. Each MOV is individually fused and the products carry a NEMA Type 4X rating suitable for installing indoors, outdoors, or in other harsh environments.

Easy Installation
Surgelogic SDSA1175 SPDs are some of the most versatile, yet compact devices available on the market today. This compact package can be mounted on an electrical panel, meter socket, or inside electrical control cabinets.

Warranty
The SDSA1175 and SDSA1175T warranty is 2 years.

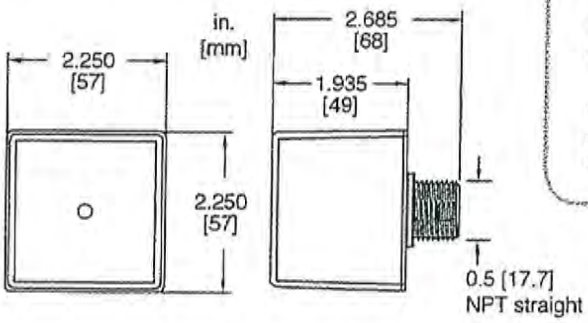

SDSA1175 SPDs



Mechanical Description

Enclosure	Plastic
NEMA Rating	Type 4X
Connection Method	#14 AWG, Solid
Mounting Method	Close Nippled, Back Mounted
Thermal Fusing	Yes
Overcurrent Fusing	Yes
Operating Frequency	50/60 Hz
Operating Altitude	Sea Level-12,000' (3,658 m)
Storage Temperature	-40° F to +149° F (-40° C to +65° C)
Operating Temperature	-40° F to +149° F (-40° C to +65° C)

Diagnostics
Green status LED

Listings and Performance
cULus Listed to 1449 3rd edition Type 1 SPD, CSA C22.2 No. 8-M1986, C233.1-87

The SDSA1175 is a three-wire surge suppressor designed for 120/240 Vac services. Two SDSA1175 units can be installed for 208Y/120 Vac services. The SDSA1175T is a two-wire surge suppressor designed for 120 Vac services.

Voltage	Surge Current per Phase	Configuration	Model Number	MCOV	SCCR	I_n	VPR L-N	VPR L-G	VPR L-L	VPR N-G
120/240V	36kA	1 Ø, 3-wire	SDSA1175	150V L-N 300V L-L	25kA	10kA	700V	N/A	1200V	N/A
120V	36kA	1 Ø, 2-wire	SDSA1175T	150V	25kA	10kA	700V	N/A	N/A	N/A

Square D and Surgelogic are trademarks or registered trademarks of Schneider Electric and/or its affiliates in the United States and/or other countries. Other marks used herein may be the property of their respective owners.

Schneider Electric USA, Inc. 1751 S. 4800 W., Salt Lake City, UT 84104, USA Telephone: (801)-977-9009 Fax: (801)-977-0200 www.surgelogic.com

Document Number 9990-0119A

February 2011

© 2011 Schneider Electric. All rights reserved.

SKAP

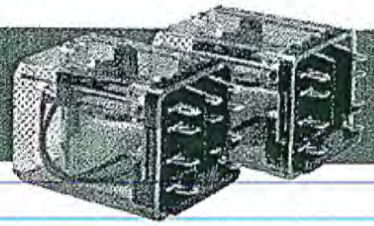

SKAP

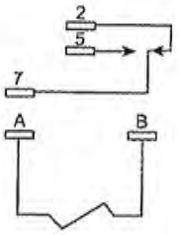

1C

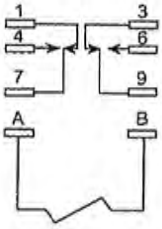

2C

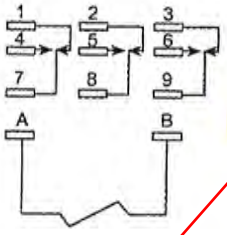

3C

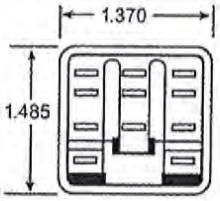

SKAP

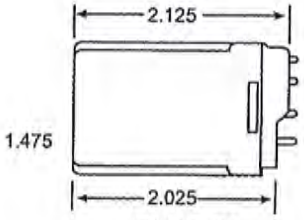

PLUG-IN

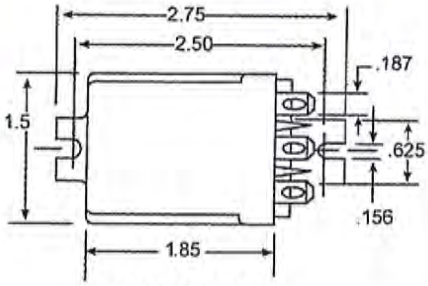

WITH TAB MOUNT
SKAT

P.C. MOUNT

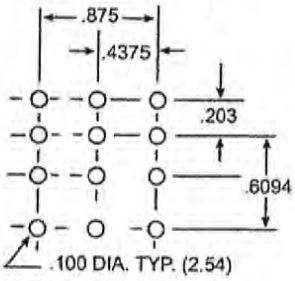

Reference Data

Electrical Service Life

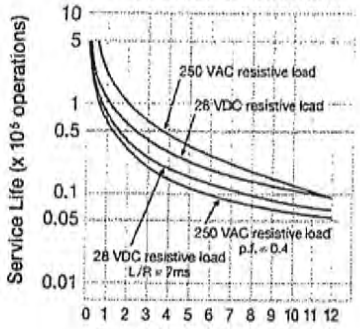

Switching Capacity

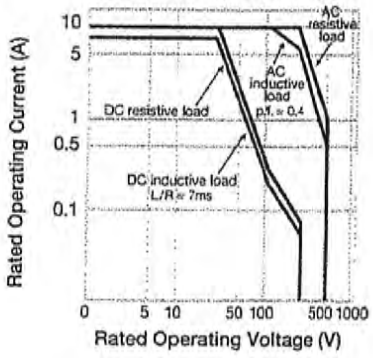

sky electronics INTERNATIONAL

SKAP

Socket:
NDSQ-11A or
NDSQ-11AF

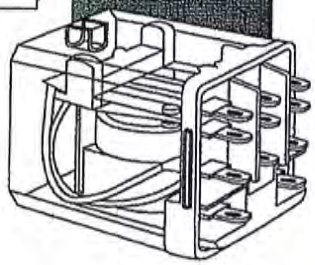

Performance (At Initial Value)

ITEM	TYPE SKAP
Contact Resistance	50 mΩ Max.
Operate Time	15 msec Max.
Release Time	10 msec Max.
Dielectric Strength: Between Coil and Contact Between Contacts	AC 1500 V (1 minute) AC 500 V (1 minute)
Surge Resistance	AC 500V (1 min) between contacts AC 1500 V (1 min) between coil and contact
Insulation Resistance	100MΩ Min. (500 VDC)
Max. ON/OFF Switching: Mechanically Electrically	300 operations/min. 30 operations/min.
Operating Ambient Temperature	–45°C to +70 °C (no water condensation and no water drop)
Coil Temperature Rise	UL Specs
Pull-in Voltage	AC — 85% of nominal voltage DC — 80% of nominal voltage
Life Expectancy: Mechanically Electrically	10^7 operations/min. (no load) 10^5 operations/min. (at rated load)
Weight	90 grams max

Coil Specification (At 20° C)

AC Coil Voltage		Resist Ohms	DC Coil Voltage	Resist Ohms	Maximum Voltage
SP	6V	6	6V	32	110% of Rated Voltage
	12V	21	12V	120	
	24V	85	24V	472	
DP	120V	2250	48V	1800	
	240V	9110	110V	10000	
TP	12V	18			
	24V	72			
	120V	1700			
	240V	7200			

Contact Rating

ITEM	TYPE SKAP
Contact Capacity Resistive Load (Cos. ø = 1) Inductive Load (Cos. ø = 0.4 L/R = 7 msec.)	 See Chart See Chart
Rated Carrying Current	13 A
Max. Allowable Voltage	300 V
Max. Allowable Current	13 A
Contact Material	AgCdO

Ordering Information

SKA P L 1C 12VAC

- 12VAC — Coil Voltage. See coil specifications for available voltages. Other voltages available as special orders.
- 1C — Contact Configuration: 1C, 2C, 3C
- L — L – Light; M – Push Button
- P — P – Plug In; T – Tab Mount; TT – Top Tab Mount; B – P.C. Board Mount

UL #E96834(M) (U.S. & Canada)

C.S.A. #LR83798-1

sky electronics INTERNATIONAL

Product data sheet
Characteristics

ZB5AG1
selector switch head Ø22 3-position spring return Ronis 455



Main

Range of product	Harmony XB5
Product or component type	Head for key selector switch
Device short name	ZB5
Bezel material	Plastic
Mounting diameter	22 mm
Sale per indivisible quantity	1
Shape of signaling unit head	Round
Type of operator	Spring return left to centre
Operator profile	Black key switch
Operator position information	3 positions +/- 45°
Type of keylock	Ronis 455
Key withdrawal position	Right

Complementary

CAD overall width	29 mm
CAD overall height	29 mm
CAD overall depth	72 mm
Product weight	0.057 kg
Mechanical durability	1000000 cycles
Station name	XALK 2...5 cut-outs XALD 1...5 cut-outs
Electrical composition code	SR1 for <= 3 contacts using single blocks in rear mounting SF1 for <= 3 contacts using single blocks in front mounting C3 for <= 6 contacts using single blocks in front mounting C11 for <= 3 contacts using single blocks in front mounting C8 for <= 4 contacts using single and double blocks in front mounting C7 for <= 4 contacts using single blocks in front mounting C6 for <= 5 contacts using single and double blocks in front mounting C5 for <= 5 contacts using single blocks in front mounting C4 for <= 6 contacts using single and double blocks in front mounting

Environment

Protective treatment	TH
Ambient air temperature for storage	-40...70 °C
Ambient air temperature for operation	-25...70 °C
Class of protection against electric shock	Class II conforming to IEC 60536
IP degree of protection	IP69K conforming to IEC 60529
NEMA degree of protection	NEMA 4X NEMA 13
Resistance to high pressure washer	7000000 Pa at 55 °C,distance: 0.1 m
IK degree of protection	IK06 conforming to IEC 50102
Standards	EN/IEC 60947-1 EN/IEC 60947-5-1 EN/IEC 60947-5-4 JIS C 4520 UL 508 CSA C22.2 No 14

The information provided in this documentation contains general descriptions and/or technical characteristics of the performance of the products contained herein.
This documentation is not intended as a substitute for and is not to be used for determining suitability or reliability of these products for specific user applications.
It is the duty of any such user or integrator to perform the appropriate and complete risk analysis, evaluation and testing of the products with respect to the relevant specific application or use thereof.
Neither Schneider Electric Industries SAS nor any of its affiliates or subsidiaries shall be responsible or liable for misuse of the information contained herein.

Product certifications	BV CSA DNV GL LROS (Lloyds register of shipping) RINA UL listed
Vibration resistance	5 gn (f = 2...500 Hz) conforming to IEC 60068-2-6
Shock resistance	50 gn (duration = 11 ms) for half sine wave acceleration conforming to IEC 60068-2-27 30 gn (duration = 18 ms) for half sine wave acceleration conforming to IEC 60068-2-27

Product data sheet
Characteristics

ZB5AV033
green pilot light head Ø22 plain lens for integral LED



Main

Range of product	Harmony XB5
Product or component type	Head for pilot light
Product compatibility	Integral LED
Device short name	ZB5
Bezel material	Plastic
Mounting diameter	22 mm
Sale per indivisible quantity	1
Shape of signaling unit head	Round
Cap/Operator or lens colour	Green
Operator additional information	With plain lens

Complementary

Product weight	0.017 kg
Resistance to high pressure washer	7000000 Pa at 55 °C ,distance: 0.1 m

Environment

IP degree of protection	IP66 conforming to IEC 60529
Vibration resistance	5 gn (f = 2...500 Hz) conforming to IEC 60068-2-6
Shock resistance	30 gn for 18 ms half sine wave acceleration conforming to IEC 60068-2-27 50 gn for 11 ms half sine wave acceleration conforming to IEC 60068-2-27
Protective treatment	TH
Ambient air temperature for storage	-40...70 °C
Ambient air temperature for operation	-25...70 °C
Class of protection against electric shock	Class II conforming to IEC 60536
NEMA degree of protection	NEMA 13 NEMA 4X
IK degree of protection	IK05 conforming to IEC 50102
Standards	CSA C22-2 No 14 EN/IEC 60947-1 EN/IEC 60947-5-1 EN/IEC 60947-5-4 EN/IEC 60947-5-5 JIS C 4520 UL 508
RoHS EUR conformity date	0646
RoHS EUR status	Compliant

The information provided in this documentation contains general descriptions and/or technical characteristics of the performance of the products contained herein.
This documentation is not intended as a substitute for and is not to be used for determining suitability or reliability of these products for specific user applications.
It is the duty of any such user or integrator to perform the appropriate and complete risk analysis, evaluation and testing of the products with respect to the relevant specific application or use thereof.
Neither Schneider Electric Industries SAS nor any of its affiliates or subsidiaries shall be responsible or liable for misuse of the information contained herein.

Product data sheet
Characteristics

ZB5AV043
red pilot light head Ø22 plain lens for integral LED



Main

Range of product	Harmony XB5
Product or component type	Head for pilot light
Product compatibility	Integral LED
Device short name	ZB5
Bezel material	Plastic
Mounting diameter	22 mm
Sale per indivisible quantity	1
Shape of signaling unit head	Round
Cap/Operator or lens colour	Red
Operator additional information	With plain lens

Complementary

Product weight	0.017 kg
Resistance to high pressure washer	7000000 Pa at 55 °C ,distance: 0.1 m

Environment

IP degree of protection	IP66 conforming to IEC 60529
Vibration resistance	5 gn (f = 2...500 Hz) conforming to IEC 60068-2-6
Shock resistance	30 gn for 18 ms half sine wave acceleration conforming to IEC 60068-2-27 50 gn for 11 ms half sine wave acceleration conforming to IEC 60068-2-27
Protective treatment	TH
Ambient air temperature for storage	-40...70 °C
Ambient air temperature for operation	-25...70 °C
Class of protection against electric shock	Class II conforming to IEC 60536
NEMA degree of protection	NEMA 13 NEMA 4X
IK degree of protection	IK05 conforming to IEC 50102
Standards	CSA C22-2 No 14 EN/IEC 60947-1 EN/IEC 60947-5-1 EN/IEC 60947-5-4 EN/IEC 60947-5-5 JIS C 4520 UL 508
RoHS EUR conformity date	0646
RoHS EUR status	Compliant

The information provided in this documentation contains general descriptions and/or technical characteristics of the performance of the products contained herein.
This documentation is not intended as a substitute for and is not to be used for determining suitability or reliability of these products for specific user applications.
It is the duty of any such user or integrator to perform the appropriate and complete risk analysis, evaluation and testing of the products with respect to the relevant specific application or use thereof.
Neither Schneider Electric Industries SAS nor any of its affiliates or subsidiaries shall be responsible or liable for misuse of the information contained herein.

Standards	EN/IEC 60947-1 EN/IEC 60947-5-1 EN/IEC 60947-5-4 JIS C 4520 UL 508 CSA C22.2 No 14
Product certifications	BV CSA DNV GL LROS (Lloyds register of shipping) RINA UL listed
Vibration resistance	5 gn (f = 2...500 Hz) conforming to IEC 60068-2-6
Shock resistance	50 gn for 11 ms half sine wave acceleration conforming to IEC 60068-2-27 30 gn for 18 ms half sine wave acceleration conforming to IEC 60068-2-27

Ordering and shipping details

Category	22467 - PUSHBUTTONS,22MM(PLASTIC) NEW
Discount Schedule	CS2
GTIN	00785901354840
Nbr. of units in pkg.	1
Package weight(Lbs)	0.04
Product availability	Stock - Normally stocked in distribution facility
Returnability	Y
Country of origin	FR

Contractual warranty

Period	18 months

Product Data Sheet

ZB5AA3
PUSH BUTTON OPERATOR / GREEN

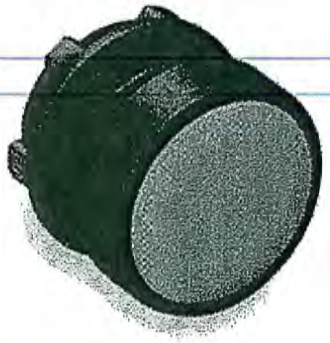

Availability: **Stock Item: This item is normally stocked in our distribution facility.**

Technical Characteristics

Bezel Material	Black Plastic
Approvals	UL Listed File Number E164353 CCN NKCR - CSA Certified File Number LR44087 Class 321103 - CE Marked
Color	Green
Operator Action	Momentary
Enclosure Rating	NEMA 1/2/3/4/4X/13
Degree of Protection	IP 65
Markings	Unmarked
Operator Type	Non-Illuminated
Style	Standard Button: Flush
Shape of Head	Round
Size	22mm
Type	XB5

Shipping and Ordering

Category	22467 - Push Buttons, Plastic, 22mm, ZB5, XB5
Discount Schedule	CS2
GTIN	00785901355328
Package Quantity	1
Weight	0.04 lbs.
Availability Code	Stock Item: This item is normally stocked in our distribution facility.
Returnability	Y
Country of Origin	FR

As standards, specifications, and designs change from time to time, please ask for confirmation of the information given in this document.

© 2012 Schneider Electric. All rights reserved.

Schneider Electric

Floyd Bell Inc
SOUND SOLUTIONS

ISO 9001:2000 Certified
Made in USA

SEARCH SEARCH

PRODUCTS & SERVICES

Items in cart

HOME » PRODUCTS & SERVICES » TECHNICAL SPECIFICATIONS: MC-09-201-Q

Buy Alarms
Quick Quote
Get a Sample
Tone Types

ROHS STATEMENT

HELP ME CHOOSE

AudioLarm II

MC-09-201-Q



More Information

Continuous

UL Recognized

Also available as a RoHS part

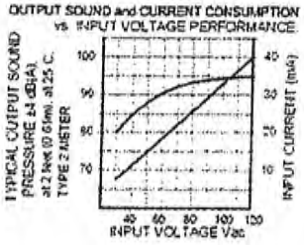

Dimensions

Specifications

Revision: 2.06

Medium Loud Continuous Panel Mount Case and Quick Connect Blades Termination

Mounting:	Panel Mount
Operating Mode:	Medium Loud Continuous
Operating Voltage:	30-120 Vac
Operating Frequency:	2900±250 Hz
Typical Operating Current:	7 mA at 30 Vac 40 mA at 120 Vac
Typical Sound Pressure:	80±5 dB(A) at 30 Vac, at 24 inches (61 cm), at 25°C 95±5 dB(A), at 120 Vac, at 24 inches (61 cm), at 25°C
Termination:	Quick Connect Blades
Termination Strength:	Pull test with a maximum of 22 pounds (10 kg) load
Operating Temperature:	-20°C to +65°C
Storage Temperature:	-40°C to +85°C
Surge Voltage:	20% over maximum rated voltage for less than 5 minutes
Reverse Voltage Protection:	To the maximum operating voltage
Construction Materials:	Case- Plastic "NORYL® N-190", Flame Retardant UL 94-VO, Black Internal Circuit- Audio-oscillator and piezoelectric driver Potting- 2 parts epoxy resin or silicone, black Diaphragm- Stainless Steel 304
Gasket:	Gasket (Sold Separately)- 0.062" Thick, 60 Durometer Neoprene
Environmental Durability:	ASTM B117 Certified - Withstands exposure to salt spray for 300 hours IP 68 Certified - Withstands water submergance and dust exposure Humidity- 95% relative humidity at +40°C continuously for 100 hours Vibration- Withstands vibration between 0 and 55 Hz, on all axes
Life Expectancy:	10 years under normal operating conditions
Warranty:	For a period of two years from the date of manufacture under normal operating conditions

Pricing			Place an Order
Quantity:	**1-9**	**10 or more**	**Quantity:** [ ] Add to Cart
Price:	$20.41 ea.	Get a Quote	

Floyd Bell Inc.
720 Dearborn Park Ln
Columbus, OH 43085

Phone
614.294.4000

Toll Free
888.FLOYD.BELL
(356.9323)

Fax
614.291.0823

CONTINUOUS HINGE WITH CLAMPS, TYPE 4

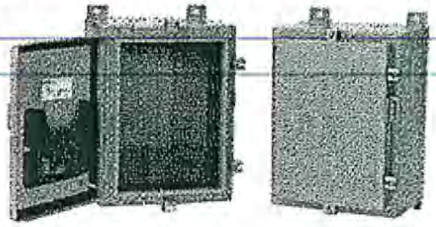

INDUSTRY STANDARDS

UL 508A Listed; Type 4, 12, 13; File No. E61997
cUL Listed per CSA C22.2 No. 94; Type 4, 12, 13; File No. E61997

NEMA/EEMAC Type 3, 4, 12, and 13
CSA, File No. 42186; Type 4 and 12
IEC 60529, IP66

APPLICATION

These single-door enclosures feature a hinged door with clamps on three sides to create a secure seal in indoor or outdoor environments. The gray polyester powder finish inside and out provides enhanced corrosion protection in outdoor applications.

SPECIFICATIONS

- 16 or 14 gauge steel (see table)
- Seams continuously welded and ground smooth
- External wall-mounting brackets
- Formed external flanges around all sides of enclosure opening
- Stainless steel door clamps on three sides of door
- Removable heavy gauge stainless steel continuous hinge pin
- Hasp and staple provided for padlocking
- Data pocket is high-impact thermoplastic
- Collar studs provided for mounting optional panels
- Bonding provision on door

FINISH

ANSI 61 gray polyester powder paint inside and out

ACCESSORIES

See also Accessories.
Industrial Corrosion Inhibitors
Fast-Operating Clamp Assembly
Incandescent Light Package
Compact Cooling Fans
Steel and Stainless Steel Window Kits

MODIFICATION AND CUSTOMIZATION

Hoffman excels at modifying and customizing products to your specifications. Contact your local Hoffman sales office or distributor for complete information.

BULLETIN: A4

Standard Product

Catalog Number	A x B x C, in	A x B x C, mm	Body Gauge	Panel	Conductive Panel	Panel Size W x L, (mm)	Panel Size W x L, (mm)	E (in.)	E (mm)	Number of Clamps	Data Pocket
A16H12ALP	16.00 x 12.00 x 6.00	406 x 305 x 152	16	A16P12	A16P12G	13.00 x 9.00	330 x 229	1.25	32	4	Small
A16H16ALP	16.00 x 16.00 x 6.00	406 x 406 x 152	16	A16P16	A16P16G	13.00 x 13.00	330 x 330	3.00	76	4	Small
A16H20ALP	16.00 x 20.00 x 6.00	406 x 508 x 152	16	A20P16	A20P16G	17.00 x 13.00	432 x 330	3.00	76	4	Small
A20H16ALP	20.00 x 16.00 x 6.00	508 x 406 x 152	16	A20P16	A20P16G	17.00 x 13.00	432 x 330	3.00	76	4	Small
A20H20ALP	20.00 x 20.00 x 6.00	508 x 508 x 152	16	A20P20	A20P20G	17.00 x 17.00	432 x 432	3.00	76	4	Small
A24H12ALP	24.00 x 12.00 x 6.00	610 x 305 x 152	16	A12P24	A12P24G	9.00 x 21.00	229 x 533	1.25	32	5	Small
A24H16ALP	24.00 x 16.00 x 6.00	610 x 406 x 152	16	A24P16	A24P16G	21.00 x 13.00	533 x 330	3.00	76	5	Small
A24H20ALP	24.00 x 20.00 x 6.00	610 x 508 x 152	16	A24P20	A24P20G	21.00 x 17.00	533 x 432	3.00	76	5	Small
A24H24ALP	24.00 x 24.00 x 6.00	610 x 610 x 152	16	A24P24	A24P24G	21.00 x 21.00	533 x 533	3.00	76	5	Small
A30H20ALP	30.00 x 20.00 x 6.00	762 x 508 x 152	14	A30P20	A30P20G	27.00 x 17.00	686 x 432	3.00	76	5	Small
A30H24ALP	30.00 x 24.00 x 6.00	762 x 610 x 152	14	A30P24	A30P24G	27.00 x 21.00	686 x 533	3.00	76	5	Large
A36H24ALP	36.00 x 24.00 x 6.00	914 x 610 x 152	14	A36P24	A36P24G	33.00 x 21.00	838 x 533	3.00	76	5	Large
A16H12BLP	16.00 x 12.00 x 8.00	406 x 305 x 203	16	A16P12	A16P12G	13.00 x 9.00	330 x 229	1.25	32	4	Small
A20H16BLP	20.00 x 16.00 x 8.00	508 x 406 x 203	16	A20P16	A20P16G	17.00 x 13.00	432 x 330	3.00	76	4	Small
A20H20BLP	20.00 x 20.00 x 8.00	508 x 508 x 203	16	A20P20	A20P20G	17.00 x 17.00	432 x 432	3.00	76	4	Small
A20H24BLP	20.00 x 24.00 x 8.00	508 x 610 x 203	16	A24P20	A24P20G	21.00 x 17.00	533 x 432	3.00	76	4	Small
A24H20BLP	24.00 x 20.00 x 8.00	610 x 508 x 203	16	A24P20	A24P20G	21.00 x 17.00	533 x 432	3.00	76	5	Small
A24H24BLP	24.00 x 24.00 x 8.00	610 x 610 x 203	16	A24P24	A24P24G	21.00 x 21.00	533 x 533	3.00	76	5	Small
A24H30BLP	24.00 x 30.00 x 8.00	610 x 762 x 203	14	A30P24	A30P24G	27.00 x 21.00	686 x 533	3.00	76	7	Small
A30H20BLP	30.00 x 20.00 x 8.00	762 x 508 x 203	14	A30P20	A30P20G	27.00 x 17.00	686 x 432	3.00	76	5	Small
A30H24BLP	30.00 x 24.00 x 8.00	762 x 610 x 203	14	A30P24	A30P24G	27.00 x 21.00	686 x 533	3.00	76	6	Large
A30H30BLP	30.00 x 30.00 x 8.00	762 x 762 x 203	14	A30P30	A30P30G	27.00 x 27.00	686 x 686	3.00	76	7	Large
A36H24BLP	36.00 x 24.00 x 8.00	914 x 610 x 203	14	A36P24	A36P24G	33.00 x 21.00	838 x 533	3.00	76	5	Large
A36H30BLP	36.00 x 30.00 x 8.00	914 x 762 x 203	14	A36P30	A36P30G	33.00 x 27.00	838 x 686	3.00	76	7	Large
A42H30BLP	42.00 x 30.00 x 8.00	1067 x 762 x 203	14	A42P30	A42P30G	39.00 x 27.00	991 x 686	3.00	76	8	Small
A42H36BLP	42.00 x 36.00 x 8.00	1067 x 914 x 203	14	A42P36	A42P36G	39.00 x 33.00	991 x 838	3.00	76	8	Large
A48H36BLP	48.00 x 36.00 x 8.00	1219 x 914 x 203	14	A48P36	A48P36G	45.00 x 33.00	1143 x 838	3.00	76	8	Large
A60H36BLP	60.00 x 36.00 x 8.00	1524 x 914 x 203	14	A60P36	A60P36G	57.00 x 33.00	1448 x 838	3.00	76	9	Large
A20H16CLP	20.00 x 16.00 x 10.00	508 x 406 x 254	14	A20P16	A20P16G	17.00 x 13.00	432 x 330	3.00	76	4	Small
A24H20CLP	24.00 x 20.00 x 10.00	610 x 508 x 254	14	A24P20	A24P20G	21.00 x 17.00	533 x 432	3.00	76	5	Small
A30H24CLP	30.00 x 24.00 x 10.00	762 x 610 x 254	14	A30P24	A30P24G	27.00 x 21.00	686 x 533	3.00	76	5	Large
A36H30CLP	36.00 x 30.00 x 10.00	914 x 762 x 254	14	A36P30	A36P30G	33.00 x 27.00	838 x 686	3.00	76	7	Large
A48H30CLP	48.00 x 30.00 x 10.00	1219 x 762 x 254	14	A48P30	A48P30G	45.00 x 27.00	1143 x 686	3.00	76	8	Small
A48H36CLP	48.00 x 36.00 x 10.00	1219 x 914 x 254	14	A48P36	A48P36G	45.00 x 33.00	1143 x 838	3.00	76	8	Large
A60H36CLP	60.00 x 36.00 x 10.00	1524 x 914 x 254	14	A60P36	A60P36G	57.00 x 33.00	1448 x 838	3.00	76	9	Large
A30H24DLP	30.00 x 24.00 x 12.00	762 x 610 x 305	14	A30P24	A30P24G	27.00 x 21.00	686 x 533	3.00	76	5	Large
A36H30DLP	36.00 x 30.00 x 12.00	914 x 762 x 305	14	A36P30	A36P30G	33.00 x 27.00	838 x 686	3.00	76	7	Large
A48H36DLP	48.00 x 36.00 x 12.00	1219 x 914 x 305	14	A48P36	A48P36G	45.00 x 33.00	1143 x 838	3.00	76	8	Large
A36H30FLP	36.00 x 30.00 x 16.00	914 x 762 x 406	14	A36P30	A36P30G	33.00 x 27.00	838 x 686	3.00	76	7	Large
A48H36FLP	48.00 x 36.00 x 16.00	1219 x 914 x 406	14	48P36	A48P36G	45.00 x 33.00	1143 x 838	3.00	76	8	Large
A60H36FLP	60.00 x 36.00 x 16.00	1524 x 914 x 406	14	A60P36	A60P36G	57.00 x 33.00	1448 x 838	3.00	76	9	Large

Purchase panels separately. Optional stainless steel, conductive, composite and aluminum panels are available for most sizes.

Corrosion Inhibitors

Industrial Corrosion Inhibitors



Hoffman corrosion inhibitors protect

- Interior components of electrical enclosures, boxes, consoles and wireways
- Interior components of electronic enclosures
- Electrical and electronic equipment and controls
- Parts and components that are packaged in crates during shipping and storage
- Switch gear and relay cabinets
- Interiors of pipes, conduits and fuse boxes
- Process control computers, instruments and recording devices
- Tool chest interiors and contents
- Equipment stored at construction sites

Chief Advantages

- Protects against salt and high humidity
- Eliminates the need of oiling, plating or dipping metal
- Puts protected equipment to use immediately without degreasing or coating removal

How They Work

Each inhibitor contains a special chemical combination that vaporizes and condenses on all surfaces in an enclosed area. Vapors will redeposit as needed in the event of condensation of moisture on surfaces. These vapors reach every part of an enclosure, protecting all interior components. Spraying, wiping or greasing are not required. This eliminates precoating, special wraps and drying agents. Protection is effective even in salt-water atmospheres. The AHCI5E and AHCI10E emitters have additional red-metal inhibitors for further protection. Enclosures containing corrosion inhibitors must be reasonably sealed.

Life Expectancy and Usage

The normal useful life-span of Hoffman corrosion inhibitors is in excess of one year. However, inhibitor life expectancy is shortened by approximately 25 percent when exposed to temperatures above 104 F (40 C). This product is not recommended for use where temperature exceeds 199 F. Since Hoffman corrosion inhibitors are vapor-phase protective, all surfaces to be protected should be accessible to the vapors. The maximum distance the vapors can travel is approximately 1.50 ft. (.46 m). Protection of long, narrow enclosures can be achieved with tape or multiple inhibitors.

Storage and Handling

Each Hoffman corrosion inhibitor is individually packaged in a resealable bag for maximum effectiveness at the time of usage. Corrosion inhibitors should be stored at temperatures not exceeding 120 F (45 C). Hoffman corrosion inhibitors are not returnable.

When determining the proper corrosion inhibitor for your application, assume the enclosure volume to be protected is greater than calculated if (1) cabinet doors are opened frequently, (2) cabinet is located in an extremely corrosive area and/or (3) cabinet length divided by depth is greater than four.

AHCI1DV

Foam device protects one cubic foot (28 liters) of enclosure volume for approximately one year.
Size: .25 x 1.25 x 3.00 in. (6 x 32 x 76 mm)

AHCI5E

Emitter protects 5 ft.^{3} (142 liters) of enclosure volume for approximately two years from the date of manufacture. Emitters contain additional red metal (non-ferrous) inhibitors.
Size: 2.31 in. (diameter) x 0.81 in. (high) (59 mm x 21 mm)

AHCI10E

Emitter protects 10 ft.^{3} (283 liters) of enclosure volume for approximately two years from the date of manufacture. Emitters contain additional red metal (non-ferrous) inhibitors.
Size: 2.31 in. (diameter) x 1.38 in. (high) (59 mm x 35 mm)

AHCI60R

Tape protects 60 ft.^{3} of enclosure volume per roll. Use approximately 2.50 in. (63 mm) of tape per cubic foot (28 liters) of enclosure volume to be protected. Each roll of tape is packaged individually in a resealable bag.
Size: .25 in. x .75 in. x 12.00 ft. (6 mm x 19 mm x 3.6 m)

AHCI240R

Tape protects 240 ft.^{3} of enclosure volume per roll. Use approximately 1.00 in. (25 mm) of tape per cubic foot (28 liters) of enclosure volume to be protected. Each roll of tape is packaged individually in a resealable bag.
Size: .25 in. x 2.00 in. x 20.00 ft. (6 mm x 51 mm x 6.1 m)

AHCI238S

Spray is a non-conductive, nonflammable, vapor-phase film and is non-toxic. It has essentially neutral pH value. Application provides instant protection against corrosion. Spray is water soluble and can be easily flushed away with water if desired. This product should be kept from freezing and has a shelf life of 2+ years in normal warehouse conditions.

Bulletin: A80

Standard Product

Catalog Number	Enclosure Volume Protected (ft.^{3})	Enclosure Volume Protected (liters)	Package Qty.
AHCI1DV	1	28.32	50
AHCI5E	5	141.6	25
AHCI10E	10	283.2	12
AHCI60R	60 per roll	1699 per roll	3
AHCI240R	240 per roll	6797 per roll	1
AHCI238S	Corrosion Inhibitor Spray	Corrosion Inhibitor Spray	6

Metal Protection Chart

Metal	Protected by Chemical	Unprotected by Chemical
Aluminum	Marked reduction of surface attack; no pitting	Severe surface attack; tarnish; pitting
Brass*	Decreased tarnish; very minor surface attack	Surface discoloration; pitting
Steel, Iron	No change	Severe corrosion
Copper*	Slight staining	Heavy corrosive attack
Zinc Plate	Slight discoloration	Severe corrosion
Tin Plate	Slight discoloration	Moderate corrosive attack

* AHCI5E and AHCI10E emitters are recommended for these materials

© 2009 Hoffman Enclosures Inc.

APPENDIX T5

Bag Filter

Fulflo® EB Single Bag Filter Vessel

304 stainless steel, commercial
(non ASME code) design

The Fulflo EB non ASME code single bag filter vessels provide economical filtration of a wide variety of liquids in a lightweight, externally polished stainless steel design, with features including a swing bolt secured, quick opening cover and an internal positive pressure bag hold down device.

EB single bag vessels accommodate one #2 (double length) Parker “G” style bag with a 7" diameter rim.

These vessels are manufactured from polished and passivated 304 stainless steel and rated for 150 psi (10.3 bar).

For added corrosion resistance, all cover bolt and leg mounting hardware is made from stainless steel as well.



Benefits

- Swing bolted o-ring closure seal provides quick & positive seal with easy access to the vessel interior and filter bag
- Both FNPT threaded and ANSI B16.5 flanged connections are available in specific models
- NPT option offers dual 2" outlet ports on bottom and side locations
- EPDM seals are standard with other material options available
- Standard threaded FNPT vent & drains
- Standard stainless steel closure bolt hardware
- Polished exterior & pickle passivate interior/exterior for enhanced corrosion resistance
- Mounting legs are adjustable, providing flexibility for installation height and orientation

Applications

- Potable Water
- Cutting Oils
- Solvents
- Coolants
- Process Water
- Coatings
- Lubricant

Contact Information

Parker Hannifin Corporation
domnick hunter
Process Filtration - North America
2340 Eastman Avenue
Oxnard, California, USA 93030

toll free +1 877 784 2234
phone +1 805 604 3400
fax +1 805 604 3401
dhpsales.na@parker.com

www.parker.com/processfiltration

Parker domnick hunter

ENGINEERING YOUR SUCCESS.

Fulflo® EB Single Bag Filter Vessel

Material of Construction	Max. Allowable Pressure (MAP) (psi @ MAT °F)	Max. Allowable Temp. (MAT) (°F @ MAPpsi)
304 Stainless	150 psi (10.3 bar)	300°F (149°C)

O-ring Temperature Guide	
Material	**Max. Temp.**
Nitrile (Buna-N)	250°F (121°C)
EPDM (EPR)*	300°F (149°C)
FKM (Viton®)	400°F (204°C)

*EPDM o-ring is standard.
O-rings installed under the cover and under the basket rim.

Typical Aqueous Flow 160 gpm*
*Based on 160 gpm water per #2 double bag

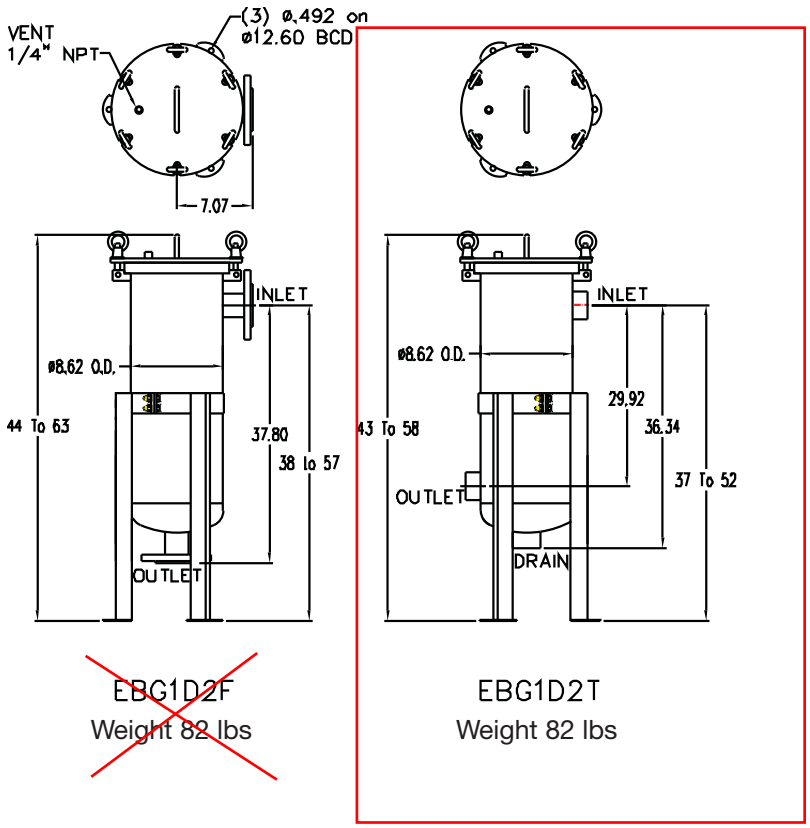

Ordering Information

EB [ ] [1] [ ] [ ]

Material of Construction	
Code	Description
G	304 SST

Cartridge Qty.
1

Bag Length	
Code	Inches
D	31.5

Inlet/Outlet Connection	
Code	Size
2F	2" Flange
2T	2" NPT

Specifications are subject to change without notification.
For User Responsibility Statement, see www.parker.com/safety

© 2014 Parker-Hannifin Corporation
domnick hunter Process Filtration - North America
All Rights Reserved
Fulflo is a registered trademark of Parker-Hannifin Corporation
Viton is a registered trademark of E.I. DuPont de Nemours & Co., Inc.

DS_IP_ EB Single Bag Vessel 2/14 Rev. B

Fulflo® Filtration Products and Systems

Parker Fulflo® E Series Cartridge and Bag Filter Vessel Operating Instructions.

WARNING

To minimize the risk of serious injury and property damage:

- Do not exceed maximum pressure and temperature rating stamped on the vessel
- Do not attempt to open the vessel until all internal pressure has been relieved
- Read and follow instructions and safety information in this manual

Contents:

I. Shutdown Procedure (For startup, refer to section V)
II. Media Replacement – Single Cartridge Filter Vessels
III. Media Replacement – Multi Cartridge Filter Vessels
IV. Media Replacement – Bag Filter Vessels
V. Startup Procedure

Note: Store this instruction manual in the plastic bag provided and retain permanently on or adjacent to the filter vessel.

Use only Genuine Parker replacement parts.

I. Shutdown Procedure.

WARNING! Do not service this vessel while inlet or outlet valves are open or while unit contains pressure. Do not, at any time, loosen closure bolts before draining. Failure to open drain and vent will result in pressurized liquid being trapped in vessel. Pressurized liquid will spray out when the bolts are loosened which could cause serious injury or property damage.

1. Before opening vessel: Turn off pump and lock it out.
2. Close inlet and outlet valves. Inlet or pressure side should always be closed first.
3. Open vent valve. Make sure the valve is piped such that escaping fluids do not cause personal injury or property damage.
4. Check pressure gauges to make sure the vessel's internal pressure is zero. Note: A DIFFERENTIAL pressure gauge connected between the inlet and outlet WILL NOT show internal pressure. Differential pressure gauges are usually marked "PSID" on the gauge face.
5. Open bottom drain. Gravity will move fluid through drain. After vessel has drained, close drain valve.
6. Loosen cover nuts, and swing bolts and nuts away from cover. On single round cartridge vessels, remove the clamp and set aside until ready for startup.
7. Remove the cover and set aside until ready to re-assemble. Protect gasket surface from damage. On single round cartridge filter vessels, remove the bowl and set aside until ready to re-assemble.

II. Media Replacement – Single Cartridge Filter Vessels (refer to figure 1)

1. Follow shut down procedure in Section I.
2. Remove the spent cartridge and dispose per local regulations and policies.
3. If using DOE (double open end) cartridges, push the cartridge onto the guide, over the spring and against the head sealing surface. Attached the bottom seal nut and tighten securely.
4. Replace the bowl and the clamp, and refer to section V, Startup Procedures.
5. If using SOE (single open end) 222 / fin cartridges, lubricate the cartridge o-rings with a suitable lubricant or water, and push the cartridge up into the o-ring sealing gland of the head until fully seated.
6. Inspect the cover o-ring for damage and replace if necessary. Lubricate the o-ring with an appropriate substance compatible with the application.
7. Replace the bowl and the clamp, and refer to Section V, Startup Procedure.

III. Media Replacement – Multi Cartridge Filter Vessels (refer to figure 2)

1. Follow shut down procedure in Section 1.
2. If using DOE (double open end) cartridges, loosen and remove the alignment plate wing nut(s), remove the alignment plate, and remove the cartridge seal springs. Set these aside for re-assembly.
3. Remove the spent cartridges and dispose per local regulations and policies. If cartridge guides are inadvertently removed with the cartridges, place the guides back into the bottom seal cups in the vessel.
4. If using DOE (double open end) cartridges, place the cartridges over the guides and onto the bottom seal cup. Replace all of the springs (one per cartridge) and the alignment plate, and thread an alignment plate wing nut onto each alignment rod. Tighten all wing nuts evenly until secure. Compression of the plate should be ¾" to 1" minimum in order to obtain and maintain a seal.
5. If using SOE (single open end) 222 / fin or flat cartridges, lubricate the cartridge o-rings with a suitable lubricant or water, and push the cartridge into the bottom seal cup until fully seated. The use of the cartridge guides is optional for SOE 222 style cartridges. Install the alignment plate and nuts and tighten until secure. Compression of the plate and the use of the springs is not required for SOE cartridges.
6. Refer to Section V, Startup Procedure.

IV. Media Replacement – Bag Filter Vessels (refer to figure 3)

1. Follow shut down procedure in Section I.
2. Remove the bag constraint ring(s) and set aside for reinstallation. Remove the spent bag(s) from the vessel and dispose per local regulations and policies. If the bag support basket is inadvertently removed with the bag, separate the bag from the basket and re-install the basket into the vessel.
3. Insert a new bag bottom first into the support basket inside the vessel and push the bag down until the bag ring is seated against the basket rim. For best results, ensure that the bag is fully extended to the bottom of the basket. Replace the bag constraint ring.
4. For single bag vessels, the bag constraint ring and hoop combination sits directly on top of the bag ring. The top of the hoop should extend slightly above the body flange face, so that the cover will contact the hoop and exert a load onto the bag, keeping the bag from dislodging. The positive pressure of the liquid flow will create the necessary seal on the bag. Slight reshaping of the hoop may be necessary so that it extends above the flange face.
5. For multi bag vessels, each bag has a separate constraint ring that is secured by twisting the device until the rod ends are secured under the constraint clips. This will prevent the bags from dislodging. The positive pressure of the liquid flow will create the necessary seal on the bag.
6. Refer to Section V, Startup Procedure.

V. Startup Procedure

1. Clean and inspect closure o-ring and o-ring groove. Lubricate o-ring with suitable lubricant such as Parker O-Lube or Parker Super O-Lube. Ensure that the lubricant is compatible with the seal material and the application.
2. Close cover onto vessel. Do not slam the cover against the vessel. Damage to the o-ring seal or sealing surfaces may occur. Swing bolts up into position to engage cover. Hand tighten the nuts.
3. Tighten nuts in an alternate crisscross pattern. Do not apply excessive torque to the nuts as permanent distortion to the filter may result. Maximum torque applied to the bolting should not exceed the values in table 1 below.
4. On single cartridge vessels, do not over tighten the clamp bolt. Max torque is 5 ft-lb. Do not tighten under pressure. If the vessel seal leaks, disassemble, clean the o-ring and seal surfaces, and re-assemble.
5. Close drains and open vent plug.
6. Open inlet valve and allow vessel to fill slowly, taking care to not allow process fluid to spray from the vent.
7. When air is expelled from vent and liquid begins to bleed from vent, close the vent plug.
8. Open outlet valve to resume normal operation.

TABLE 1 – MAXIMUM COVER BOLT TORQUE VALUES – LUBRICATED THREADS

Nominal Bolt Diameter	Stainless Steel Bolt – Max Torque ft-lb
M12 (1/2)	30
M16 (5/8)	40
M20 (3/4)	50

GENERAL WARNINGS

WARNING! USE PROTECTIVE CLOTHING. Operator should wear protective clothing including protective gloves and face shield.

WARNING! Operating vessel with damaged or worn parts could cause serious injury and/or damage. Inspect vessel interior and all components for wear, corrosion or damage. Replace all damaged components.

WARNING! Do not exceed the operating limits that are listed the vessel nameplate / label. Property damage, serious injury or death can result if limits are exceeded.

Figure 1
Single Cartridge Filter Vessel

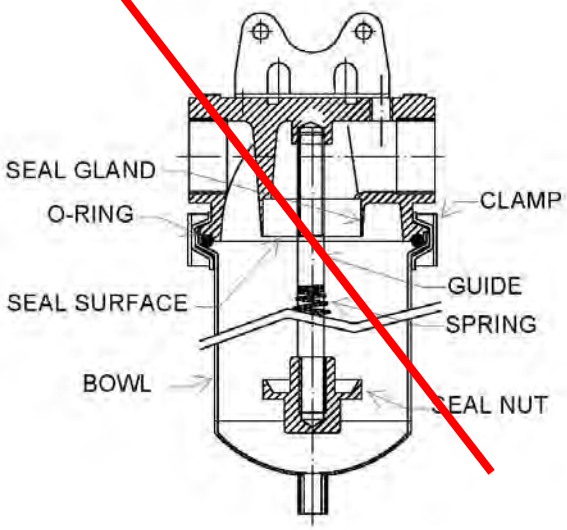

Figure 2
Multi Cartridge Filter Vessel

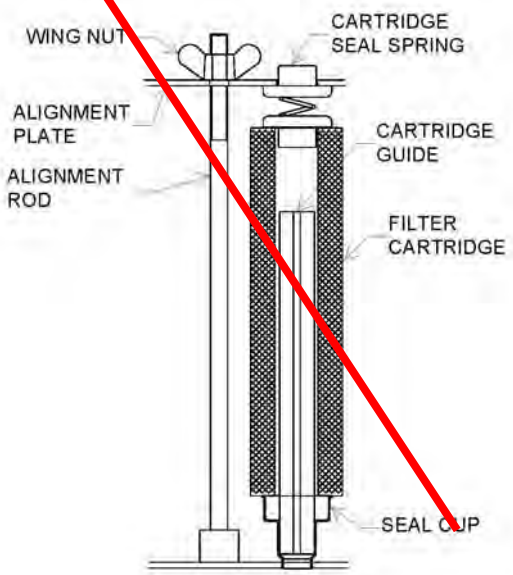

Figure 3
Bag Filter Vessel

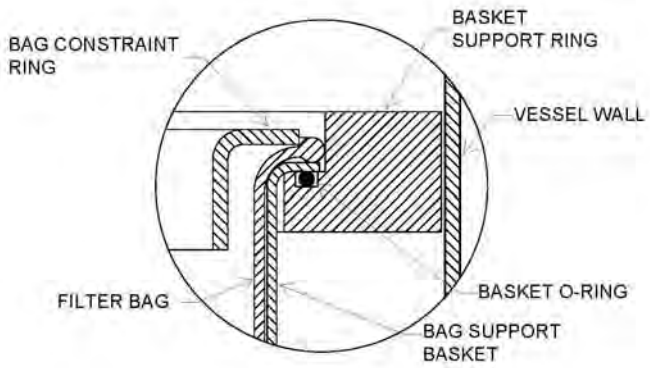

FILTER TECHNOLOGY INCORPORATED

LIQUID FILTRATION



773-523-7200

Standard and Custom Bags

7200 S. Leamington Ave. Bedford Park, IL 60638 / Tel 773-523-7200 / Fax 773-523-7672

sales@filter-technology.com / www.filter-technology.com

Flange and Ring Type Bags



Size 1
Fits all standard-length housings made by:
Eaton,
FSI,
GAF,
Pentair,
Rosedale,
Strainrite

Area:	2.5 Sq. Ft.
Diameter:	7.05"
Length:	16.5"



Size PC2
Fits Cuno Model PC2 housings:

Area:	5.0 Sq. Ft.
Diameter:	9.0"
Length:	30.0"



Size C2
Fits all Commercial-Parker filters standard-length housings:

Area:	4.4 Sq. Ft.
Diameter:	7.31"
Length:	32.0"



Size 2
Fits all double-length housings made by:
Eaton,
FSI,
GAF,
Pentair,
Rosedale,
Strainrite

Area:	4.4 Sq. Ft.
Diameter:	7.31"
Length:	32.0"



Size 3
Fits the following housings:
Eaton,
FSI,
Pentair,
Rosedale Model 4-6

Area:	0.8 Sq. Ft.
Diameter:	4.12"
Length:	9.0"

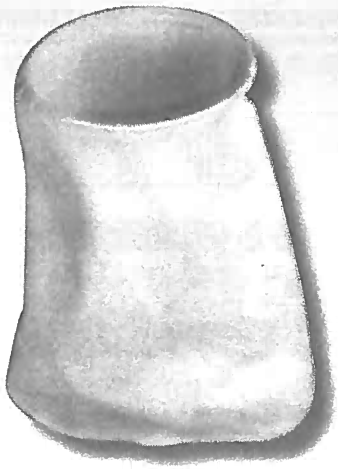

Size PC1
Fits Cuno Model PC1 housings:

Area:	2.5 Sq. Ft.
Diameter:	9.0"
Length:	20.0"

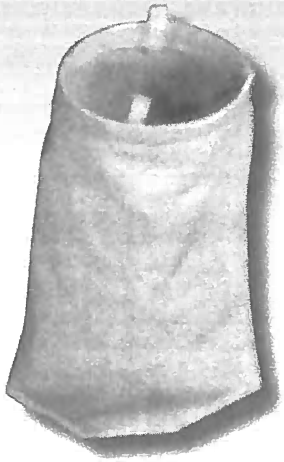

Size C1
Fits all Commercial-Parker filters standard-length housings:

Area:	2.0 Sq. Ft.
Diameter:	7.31"
Length:	16.5"

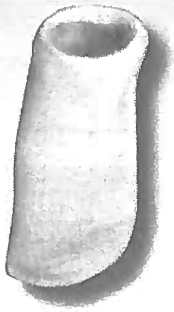

Size 4
Fits the following housings:
Eaton,
FSI Model FS-35,
Pentair,
Rosedale Model 4-12

Area:	1.3 Sq. Ft.
Diameter:	4.12"
Length:	14.0"

How To Order Filter Bags Build an ordering code as shown in this example.

Example: **PE-25 - P - 7 - S - H**

FIBER AND MICRON RATINGS

Felt, polyester = **PE**
Microns: **1, 3, 5, 10, 25, 50, 75, 100, 200**

Felt, polypropylene = **PO**
Microns: **1, 3, 5, 10, 25, 50, 100, 200**

Mesh, monofilament = **NMO**
Microns: **1, 5, 10, 25, 50, 75, 100, 125, 150, 175, 200, 250, 300, 400, 600, 800, 1000, 1200**

Mesh, monofilament polypropylene = **PMO**
Microns: **150, 200, 250, 300, 400, 600, 800**

Mesh, multifilament polyester = **PEM**
Microns: **75, 100, 125, 150, 200, 250, 300, 400, 600, 800, 1000, 1500**

Felt, Nomex = **HT**
Microns: **1, 5, 10, 25, 50, 100**

Polypropylene, micro fiber = **POMF**
Microns: **.5A, 1A, 2A, 10A, 25A**

Polyester, micro fiber = **PEMF**
Microns: **1, 2.5, 5, 10, 25**

Graded Density = **GD**
Series: **523, 525, 527, 529**

BAG FINISH OR COVER

None (standard) = **P**
Fiber-free glazed, or singed finish = **G**
Polyester multifilament mesh cover = **PEM**
Spun-bonded nylon cover (Cerex) = **C**
Nylon multifilament mesh cover = **NM**

OPTIONS

H = Handle
B = Binding
WE = Welded

BAG STYLE

S = Carbon steel plated ring
SS = Stainless steel ring
PP = Polypropylene ring
T = Drawstring
R = No ring
P = Polypropylene flange

POL = Polypropylene flange
PEL = Polyester flange
NYL = Nylon flange
POSS = Polypropylene flange
PESS = Polyester flange
NYSS = Nylon flange

BAG DIMENSIONS

Symbol	Dia. (in.)	Length (in.)
1	7-1/16	16-1/2
2	7-1/16	32
3	4-1/8	8
4	4-1/8	14
5	4.0	24
7	5-5/8	15
8	5-5/8	21
9	5-5/8	32
11	8-3/8	16-1/2
12	8-3/8	32
C-1	7.31	16.5
C-2	7.31	31.0

Symbol	Dia. (in.)	Length (in.)
RP-1	8.0	30
RP-2	8.0	40
PC-1	9.0	20
PC-2	9.0	30
P30	4.0	10
P65	4.0	23
X1	4-5/16	8
X2	4-5/16	14
X01-100	5-7/8	21
410	4.6	18
420	4.6	18

Standard Fibers And Micron Ratings

Construction	Fiber	Available Micron Ratings																				
		1	3	5	10	15	25	50	75	100	125	150	175	200	250	300	400	600	800	1000	1200	1500
Felts	Polyester																					
	Polypropylene																					
	HT-High Temp																					
Multifilament Meshes	Polyester																					
	Nylon																					
Monofilament Meshes	Nylon																					
	Polypropylene																					

Compatibility and Temperature Limits For Standard Bag Materials

Fiber	Compatibility With							
	Organic Solvents	Animal Vegetable & Petro Oils	Micro-Organisms	Alkalies	Organic Agents	Oxidizing Agents	Mineral Acids	Temperature - Limitations (max. deg. F)
Polyester	Excellent			Good				300
Polypropylene				Excellent		Good		200
Nylon				Good	Fair	Poor		325

Bag Size	Surface Area (sq. ft.)	Viscosity (cps)	Correction Factor
		50	4.5
		100	8.3
1	2.0	200	16.6
1 (inner)	1.6	400	27.7
2	4.4	800	50.0
2 (inner)	3.6	1000	56.2
3	0.5	1500	77.2
4	1.0	2000	113.6
7	1.8	4000	161.0
8	2.0	6000	250.0
9	3.4	8000	325.0
12	5.6	10000	430.0

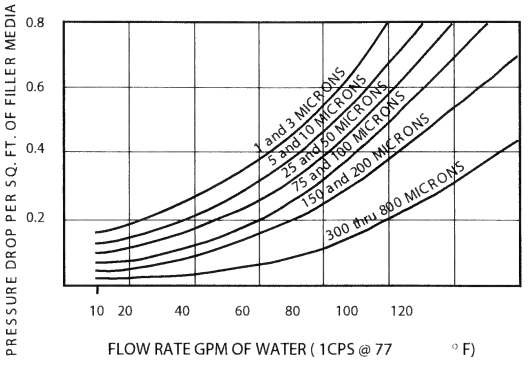

Disclaimer of Warranty

To the best of our knowledge, the data contained in this publication is correct: however, we do not assume any liability for the accuracy or completeness of the information. Users should perform their own tests to determine final suitability. Final determination of the suitability of any information or product for the use contemplated by any user, the manner of that use, and whether there is any infringement of patents is the sole responsibility of the user.

5/08

FILTER TECHNOLOGY INCORPORATED
7200 S. Leamington Ave. Bedford Park, IL 60638
Tel 773-523-7200 / Fax 773-523-7672 / sales@filter-technology.com

APPENDIX T6

Carbon Adsorption Units

CARBON ADSORBER- LIQUID PHASE
PC 3F

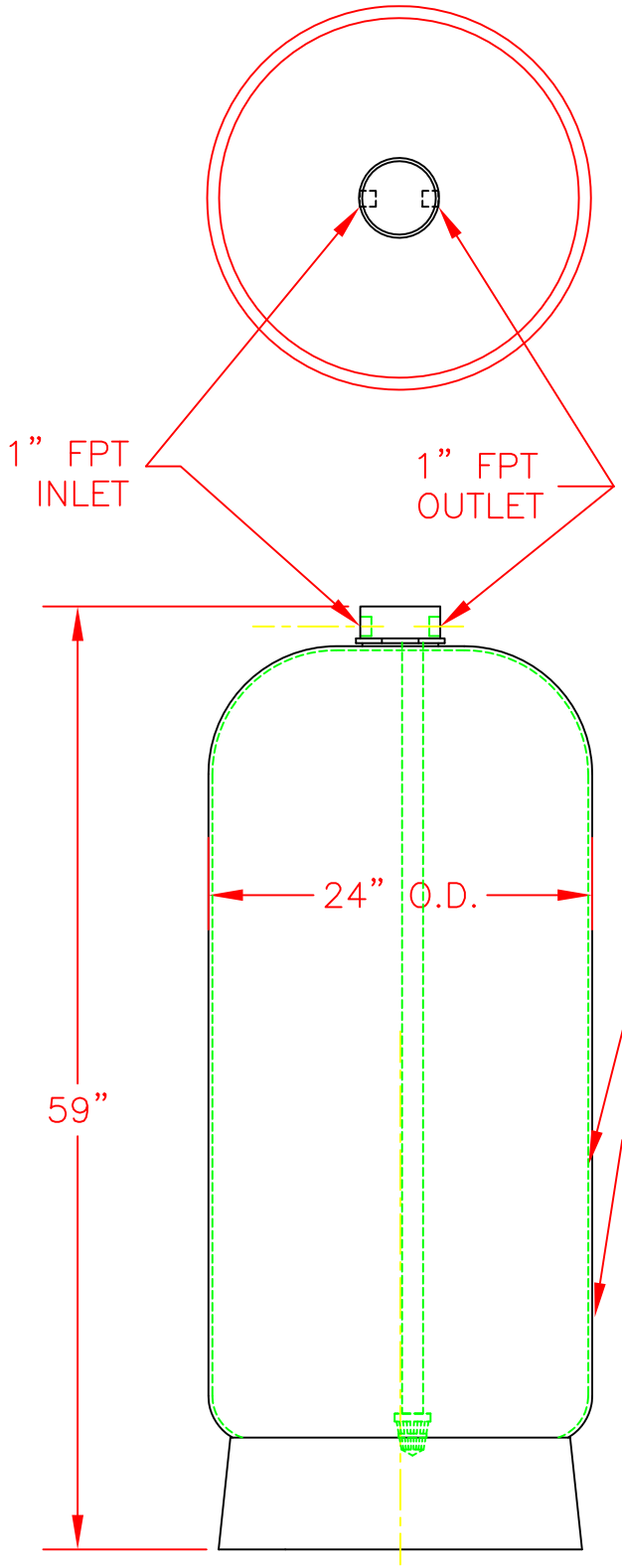

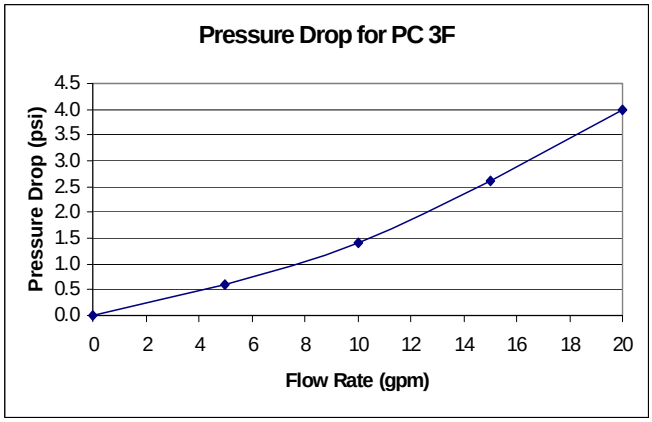

Sales Drawing #107544
02/18/05
©CARBONAIR 2005

Operation & Maintenance Manual

Carbonair Model PC-3F

Pressurized Carbon Vessel

CONTENTS

1.0 Safety Precautions 1
2.0 Equipment Description 1
3.0 Process Description 2
4.0 Installation 2
4.1 Inspection 3
4.2 Loading & Unloading 3
4.3 Connections 3
5.0 Start-Up 3
6.0 Operation 4
7.0 Trouble Shooting 4
8.0 Maintenance 6
8.1 Carbon Loading - Dry 6
8.2 Spent Carbon Removal..... 6
8.3 Backwash Procedure.....7
8.4 Vessel Inspections 8
8.5 Waste Disposal 8
9.0 Spare Parts 8
10.0 Pressure Drop Chart 8
11.0 Drawings 8
12.0 Specific Operating Parameters..... 10

1.0 SAFETY PRECAUTIONS

Failure to observe these precautions could result in serious bodily injury and/or property damage.

Be sure to read and understand this O & M manual before beginning operation. If you have any questions, please call Carbonair Environmental Systems, Inc. at (800) 526-4999.

Always wear gloves, eye protection & protective clothing when working with the equipment.

Obtain an activated carbon Material Safety Data Sheet (MSDS) for more detailed safety & handling information (available upon request).

WARNING: *Never work on a carbon vessel without adequate ventilation, proper atmospheric testing and safety equipment. The activated carbon depletes the air of oxygen.*

Take time to record your specific operating parameters on page 10.

2.0 EQUIPMENT DESCRIPTION

The Carbonair model PC-3F carbon adsorber is exceptionally durable and high performing. Its FRP construction offers superior strength and corrosion resistance and reliability under all operating conditions. The under drain collection system, consisting of a riser tube with a screen basket, enables full use of the carbon bed.

Copyright ©2011 Carbonair Environmental Systems, Inc.

Figure No. 1 - Typical PC-3F Unit

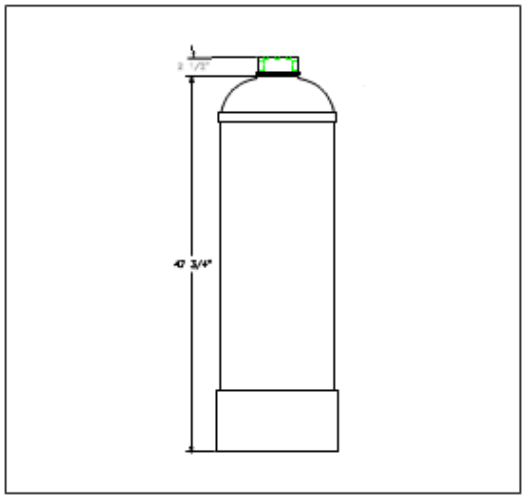

The following table outlines specifications of the PC-1F liquid phase carbon adsorber unit.

Table No. 1 – PC-3F Structural Specifications

#	Design Parameter	Specification
1	Dimensions	2' dia. x 5’ 11” H
2	Bed Area	2.4 square feet
3	Flow Range	1-20 gpm
4	Carbon Capacity	250 lbs.
5	Max Operating Pressure	150 psi
6	Empty Weight	85 lbs.
7	Loaded Weight	335 lbs.
8	Operating Weight	805 lbs.
9	Spent & Drained Weight	650 lbs.

3.0 PROCESS DESCRIPTION

Carbonair's PC-3F liquid phase carbon adsorber is designed to provide an efficient and economical means of removing organic contaminants from water. The PC-3F is a pressurized vessel that holds an appropriately sized bed of granular activated carbon (GAC).

Water is pumped through the vessel containing the GAC. The contaminants in the water are removed by adsorption as the water moves through the GAC bed. Several types of GAC are available for a variety of applications.

Granular activated carbon is highly porous and has a large surface area for adsorption. Adsorption is the process by which compounds adhere to the carbon surface. The portion of the carbon bed where adsorption occurs is referred to as the "mass transfer zone." The zone moves downward from the top of the bed as carbon becomes saturated with organic compound. When the bed becomes completely saturated some or all of the contaminants in the water will "breakthrough." Breakthrough occurs when the contaminant being treated is detected in the water flowing out of the vessel at levels approaching the discharge limit. The carbon should be replaced before this happens to prevent discharge permit violations.

Contaminated water is introduced into the vessel through the inlet connection and is distributed evenly over the top of the carbon bed. The pressure created by the influent pump forces the contaminated water down through the carbon bed. Once the water reaches the base of the carbon bed the contaminates have generally been removed. The clean water is then collected through a screen basket and riser tube, and exits the vessel through the outlet connection at the top.

The PC-3F is a pressurized vessel and is completely filled with water during operation. (No air should be in the vessel).

4.0 INSTALLATION

Be sure to carefully read all installation instructions before beginning the installation of the PC-3F pressurized carbon vessel.

Copyright ©2011 Carbonair Environmental Systems, Inc.

4.1 Inspection

1. Upon receiving the vessel, inspect the tank, fittings, and piping for structural or cosmetic damage.

2. If the vessel is shipped without carbon loaded, inspect the vessel interior and exterior for chips and/or cracks. If chips or cracks are identified, particularly on the interior surface, document the location and contact Carbonair immediately.

3. Before the vessel is set vertically in place, an inspection of the internals should be performed. This is necessary because it is possible that during transportation some of the internal piping may have been loosened.

4. Open the top fitting and inspect the inside of the tank using care not to impact any of the internal fittings.

WARNING: *Never work on the PC-3F vessel without adequate ventilation, proper atmospheric testing and safety equipment. The activated carbon depletes the air of oxygen.*

5. Once this is completed, reinstall the top fitting. DO NOT over tighten. Over tightening of the top fitting may cause the gasket to extrude and leaks to occur.

.

Do not operate any pressure vessel that has been structurally damaged. Operation of a damaged pressure vessel could result in personal injury or further damage to the carbon adsorber.

4.2 Loading & Unloading Vessel

Be sure to follow proper safety procedures when loading & unloading the PC unit.

The PC-3F adsorber should be unloaded and placed by an appropriately sized crane or forklift operated by an experienced crane operator. An empty vessel weighs approximately 83 lbs. and a loaded one weighs 335 lbs. - excluding external piping. It is recommended to fill the vessel in place. The vessel should be set square on the base or the base may crush or break. The unit should **not** be moved with wet carbon. The vessel must be serviced in place or damage will result to the base.

The PC-3F must be placed on a level concrete pad designed to handle the full operating load of the vessel (**refer to Table 1)**. The carbon adsorber should be anchored prior to filling with carbon and operating.

4.3 Connections

Assemble and mount all of the piping, valves, and instrumentation after the vessel is in place. Make sure that the piping is adequately supported and isolated with expansion joints so that excessive load or torque is not placed on the vessel fittings.

5.0 START-UP

Prior to starting up the unit, carbon must be added to the vessel. Refer to Section 8.1 for specific carbon loading procedures.

To ensure optimum performance of the carbon adsorber, the carbon should be thoroughly backwashed prior to its initial use. The backwash will remove most of the carbon fines to allow for better water distribution and reduce pressure drop through the carbon during normal operation. **Refer to Section 8.3 for detailed backwashing procedures.**

Bleed any air from the vessel by slowly opening the bleed valve at the top of the unit while filling with water..

Copyright ©2011 Carbonair Environmental Systems, Inc.

The operating flow range for the vessel is 1-20 gallons per minute. At initial start-up, the pressure drop through the vessel should be approximately 1-5 psi, depending on the flow rate.

6.0 OPERATION

During operation, the pressure drop through the vessel may begin to increase. The differential pressure should be monitored on a regular basis, and should not be allowed to exceed 15-20 psi. If the differential pressure reached 15-20 psi, the vessel should be taken off line and a backwash should be initiated.

> ***Operating the vessel at differential pressures greater than 20 psi may cause damage to the vessel's interior components.***

For proper operation, and to prevent possible damage to the vessel, it is important that the vessel remain completely filled with water during operation and temporary shutdown. Bleed any air from the vessel by slowly opening the bleed valve at the top of the unit when filling the vessel. The discharge-piping configuration should be designed to maintain the level in the tank, and to ensure that a vacuum does not develop in the pressure vessel.

Be sure never to exceed the maximum design flow rate of 20 gpm or damage to the unit may result.

7.0 TROUBLE SHOOTING

There are a few situations that may arise while operating the PC-3F which can adversely effect the performance of the unit and/or result in abnormally high maintenance costs. If these situations cannot be resolved using the following trouble shooting guide contact Carbonair at (800) 526-4999.

Situation #1:
Water cannot be pumped through the vessel at the design flow and pressure. (Pressure drop build up across the vessel).

Probable Cause:
If this occurs, the water flow is being restricted somewhere between the inlet opening and the outlet opening of the vessel (assuming there are no restrictions on the downstream side of the outlet). The most common causes for this pressure drop build up are:

- Sediment/solids in the water stream have clogged the pores in the carbon bed restricting water flow
- Chemical or biological fouling has occurred forming an encrusted layer at the top of the carbon bed
- The slotted piping at the base of the vessel are clogged with some foreign material

Solution:

- When pressure drop approaches the maximum recommended pressure drop listed in the manual, the system should be shut down and vessel drained to relieve the pressure. Also relieve the pressure on the influent line and check the inlet pressure gauge to ensure the pressure has been relieved. Open the top fitting and visually inspect the top of the carbon bed. Be sure not to let the fitting O-ring fall into vessel.
- If the top of the carbon bed appears encrusted or has a layer of foreign material on top of it, probe the top of the bed with a rod or chisel. If the bed is encrusted you will need to break up the encrusted layer into granular form prior to backwashing.
- While the vessel is open inspect the influent piping for obvious signs of wear and inspect the walls of the vessel for signs of corrosion or cracking.
- Replace the top fitting being sure to remove any carbon from the O-ring material as this may cause

Copyright ©2011 Carbonair Environmental Systems, Inc.

channels in the seal around the O-ring and allow some water to leak out.
• Proceed with the backwash procedure as outlined in Section 8.3 of this manual. This will normally remove the solids from the bed and allow you to resume normal operation.

Note: If the pressure drop during backwash exceeds the maximum listed in Section 8.3 immediately stop the backwash and call Carbonair for input.

Situation #2:
Breakthrough occurs much sooner than anticipated.

Probable Cause:
Premature breakthrough can be caused by several factors assuming you are operating at or near the design flow rate:

• Actual concentrations of contaminations may be higher than the design contaminant concentrations.
• Additional contaminants may be present in the water stream that was not taken into account in the design.
• Air in the vessel or flow restrictions may be causing the water to "channel" in the bed, effectively bypassing a portion of the GAC and thereby reducing the bed life.

Solution:
• Sample and analyze your influent water system to determine if the design contaminants are present at or near the design concentrations and that no additional contaminants are present.
• If the contaminants and/or concentrations are significantly different from the design criteria, contact Carbonair for input and a recommended solution.
• If the influent water chemistry is the same as or close to the design criteria, check to make sure that there are no air pockets in the vessel during operation. Air pockets will cause the water to channel in the carbon bed and may cause premature breakthrough.
• Also, check for encrustation of the carbon. Chemical fouling may cause sections of the bed to become impermeable, which causes channeling. If you discover the carbon is becoming encrusted, be sure to perform frequent maintenance checks of the carbon during operation and break up the encrusted areas. You may also need some type of pretreatment to remove the hardness from the water before it enters the vessel. Call Carbonair if you have any questions.

Situation #3:
GAC in the effluent water.

Probable Cause:
If GAC is detected in the effluent water the under drain system has probably been damaged.

Solution:
• Stop the operation immediately. Drain the vessel and remove enough carbon to visually inspect the under drain system. This inspection can best be accomplished through the top fitting.
• Inspect the under drain system for cracks or other damage. Replace any damaged pipes and make sure replacement materials are properly installed. Call Carbonair with any questions.

Situation #4:
Water dripping from the base of the vessel.

Probable Cause:
Water leaks may occur at the inlet and outlet connections on the vessel. In addition, because the water being treated is often 55° F or lower temperatures, significant condensation may occur on the sides of the vessel in hot, humid environments.

Solutions:
• If you detect water draining from the base of the vessel check all connection points and fittings for

leaks. Remember that carbon granules on the O-rings may cause leaks.
• Also, determine if significant condensation is occurring due to high humidity in the area around the vessel. If extensive condensation is a problem you can either adjust the humidity in the area around the vessel or make sure there is a drain under the vessel to receive the condensate water.

8.0 MAINTENANCE

There are several maintenance tasks that must be performed periodically to ensure continued, trouble free operation. These tasks are discussed in subsequent sections.

The most effective way of removing the water from the tank is by blowing the water out of the tank via compressed air. This can be done in two ways, you can place an air quick coupling with a valve on the inlet line coming into the tank or the other option would be to remove the 1/4" plug in the middle of the head and place a valve and air quick connect into the 1/4" hole.

When you are in need of blowing the water out of the system shut your influent water off and hook up your air compressor to either one of your quick connects that you choose to do. Slowly open the valve to allow the air to flow into the tank and push the water out of the tank through the outlet of the tank. The tanks are designed to handle 120psi, you should not have to exceed 50 psi to get all of the water out, do not over pressurize the tank.
Once all the water has been displaced shut off the air flow. When removing the tank head make sure the tank is not under pressure. You may want to include a valve that allows the release of air from the tank.

This is a simple process, you will want an air compressor that has some volume to it and you want to be able to control the air flow from the air compressor through the tank either by a regulator or a valve.

8.1 <u>Fresh Carbon Loading - Dry Method</u>

Dry carbon will typically be delivered in 55 lbs. bags. A funnel and razor knife can be used to aid in the loading of the carbon. A quality dust mask and protective clothing should be worn when handling dry, granulated carbon.

Please follow recommended procedure for ease of loading the dry carbon:

1. Remove the fitting on the top of the unit.

2. Tape the top of the riser tube so that it doesn't fill with carbon.

3. Place funnel, if available, into vessel opening.

When loading carbon, workers must be protected from breathing the fine carbon dust particles - a particle mask is usually sufficient. In addition, eye goggles and protective coveralls are required.

4. Using a razor knife, cut open the top of the carbon bag.

5. Lift the carbon bag using proper lifting techniques, and pour the carbon into the funnel or vessel opening.

6. Repeat until 250 lbs. of carbon has been installed in the vessel.

7. Remove tape from the riser tube.

8. Reinstall the top fitting and any other piping/equipment.

Copyright ©2011 Carbonair Environmental Systems, Inc.

9. Fill vessel completely with clean water, allowing the air to escape out the air bleed port, and allow to soak prior to treating the process water.

Note: ***If any foreign material begins to come out of the bag during the carbon loading procedure, make sure that the foreign material does not enter the adsorber.***

8.2 Spent Carbon Removal - Vacuum System

Periodically, the spent carbon will have to be removed and replaced to optimize the contaminant removal performance of the unit. The spent carbon must be removed and replaced with new virgin or reactivated carbon.

WARNING: ***Before attempting to remove the carbon from the vessel it must be understood that the material may be considered hazardous waste. Consequently, the use of respirators and protective clothing is strongly recommended.***

A vacuum system will be needed to remove the spent carbon from the vessel. The top fitting will need to be removed. Carbon can then be vacuumed from the vessel and placed in proper containers for disposal.

The spent activated carbon can be sent to Carbonair for reactivation or a licensed reactivation facility for recycling. However, before the contaminated material can be shipped, a "Spent Carbon Notice of Return Form" must be completed and sent to Carbonair. Other forms may also be required depending on the hazardous/non-hazardous classification of the contaminants adsorbed. Carbonair will not accept spent carbon until all the necessary forms have been completed.

8.3 Backwash Procedure

Be sure to read this section completely and understand the procedure before conducting a backwash on the PC-3F pressurized carbon vessel.

Your pressure vessel will need to be backwashed to eliminate carbon fines prior to start-up, or to eliminate other sediment that may build up in the carbon during normal operation. Backwashing is accomplished by pumping **SEDIMENT-FREE** water from a **CLEAN SOURCE** into the effluent line and out through the influent line at the specified flow rate.

It is critical that sediment-free water be used to prevent clogging inside of the laterals. Clogging of the laterals could cause damage to the vessel internals. It is recommended that the water be filtered through a 100-micron or smaller filter prior to use.

Prior to backwashing you must open the top fitting of the vessel to inspect the top of the carbon bed. Once the top fitting is removed, it is recommended to probe the top of the carbon bed to determine if the top layer of the carbon has hardened or become encrusted due to biological fouling. If the top of the bed is encrusted or hardened, it should be broken up into granular form prior to conducting a backwash. This can be accomplished by piercing the top of the bed repeatedly with metal rod or chisel.
The following guidelines must be followed when conducting a backwash.

Note: ***Failure to follow these instructions may result in severe damage to the carbon vessel.***

Copyright ©2011 Carbonair Environmental Systems, Inc.

If the encrusted carbon cannot be broken up in a granular form, DO NOT CONDUCT A BACKWASH. Please call Carbonair immediately for direction (800) 529-4999

1. Connect a water line from your filtered clean water source to the effluent line of the carbon adsorber. Also, you must configure the piping to the influent line so that it is possible to view the discharge of the backwash that will be discharged from the influent line.

Remember to use only clean, sediment-free water for backwash. The water should be virtually free from suspended solids and preferably should be filtered prior to introduction to the vessel. Filtration can be accomplished by using a bag filter (100 micron or smaller).

2. It is very important that the pressure differential (DP) between the effluent and influent line be closely monitored during backwash. This pressure differential can be monitored by reading the pressure gauges on the influent line and effluent lines.

The DP between the effluent and influent lines must not exceed 20 psi. DPs greater than 20 psi may cause damage to the internal piping assembly in the carbon vessel.
If you have any questions about monitoring the pressure differential, please call Carbonair for input prior to conducting a backwash. Carbonair can provide you with pressure gauges if your system is not currently equipped with gauges.

If the pressure differential exceeds 20 psi at any time during the backwash, the pump should be immediately shut down to avoid damage to the vessel internals.

3. The recommended backwash flow rate for your vessel is 8-12 gpm per square foot surface area, which is a flow rate of 20-30 gpm for a PC-3F. When initiating backwash, the flow rate to the vessel should be started very low and then gradually increased to the recommended flow rate as the pressure differential allows. The flow should be regulated by a manual valve prior to the effluent port of the vessel. The DP should be closely monitored during this increase in flow rate.

Note: ***If there are any questions regarding any of these instructions, please call Carbonair before initiating backwash.***

Carbonair will not be held liable for damage to the vessel, personal injury, or other damages to property or body caused by improper operation during backwash or normal operation

8.4 <u>Vessel Inspections</u>

Inspect the internal pipes for cracks and other signs of wear. Also inspect the tank sidewalls for signs of wear or flaking in the resin. If signs of wear or damage are present, contact Carbonair for recommended service procedures.

Continued use of a damaged vessel may cause other problems. Carbonair will not be responsible for any damage caused by operation of a damaged vessel.

8.5 <u>Waste Disposal</u>

Proper disposal of spent carbon is essential. Be sure to follow all local, state and federal regulations for handling, storing, transportation, disposal and reactivation of spent carbon.

9.0 SPARE PARTS

When ordering spare parts, refer to the drawings at the end of the manual. Be sure to provide the vessel model and the complete description of the part.

Copyright ©2011 Carbonair Environmental Systems, Inc.

10.0 PRESSURE DROP CHART

The following pressure drop chart shows the pressure drop in inches of water at different liquid flow rates through the PC-3F liquid-phase pressurized carbon vessel with 250 pounds of virgin CECA GAC 30 Carbon @ 55°F.

Figure No. 2 - PC-3F Pressure Drop Chart

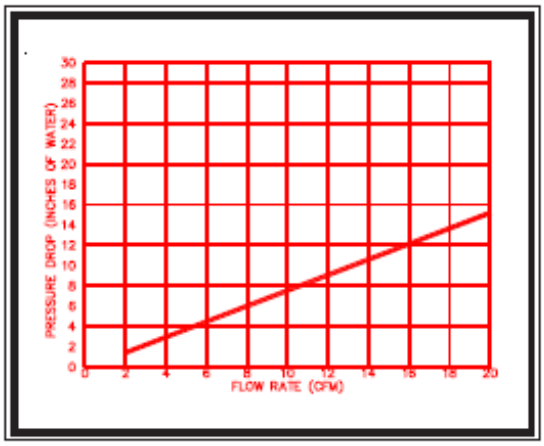

11.0 DRAWINGS

An assembly drawing has been included on page 9 to simplify the parts identified and ordering process. A parts list is included.

Copyright ©2011 Carbonair Environmental Systems, Inc.

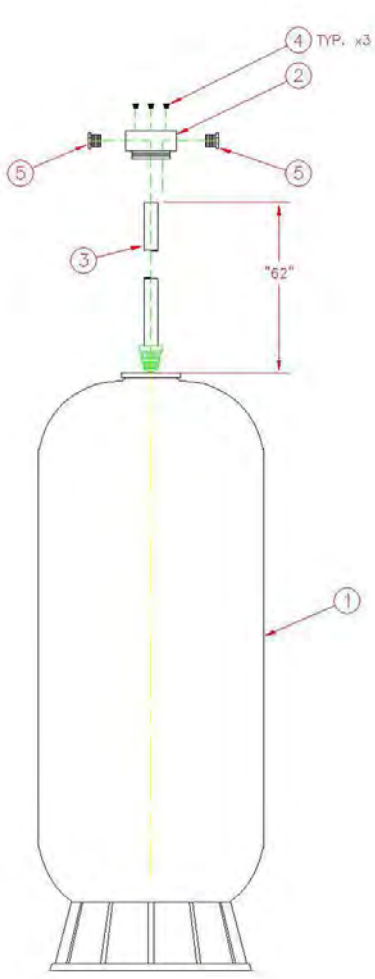

#	PART DESCRIPTION	PART #
1	PC-3F vessel, FRP	114894
2	Tank Head, PVC	153263
3	¾” Sch 40 PVC Pipe with Basket Screen	108016
4	¼” plug, PVC	
5	1” plug, PVC	
	250lbs 12x40 React Carbon	

Copyright ©2011 Carbonair Environmental Systems, Inc.

12.0 SPECIFIC OPERATING PARAMETERS

Record Operating Parameters at start-up.

Water Flow Rate: _____

Inlet Water Pressure: _____

Outlet Water Pressure: _____

Water Temperature: _____

Copyright ©2011 Carbonair Environmental Systems, Inc.

APPENDIX T7

Flow Meter and Display

Recordall® Disc Meters

Lead-Free Bronze Alloy Models 120 & 170, Sizes 1-1/2" (40 mm) & 2" (50 mm), NSF/ANSI Standards 61 and 372 Certified

DESCRIPTION

The Recordall Models 120 and 170 Disc Series meters meet or exceed the most recent revision of AWWA Standard C700 and are available in a lead-free bronze alloy. Both meters comply with the lead-free provisions of the Safe Drinking Water Act, are certified to NSF/ANSI Standards 61 and 372 (Trade Designations: M120-LL and M170LL) and carry the NSF-61 mark on the housing. All components of the lead-free bronze alloy meter (housing, measuring element, seals, and so on) comprise the certified system.

Applications: For use in measurement of potable cold water in residential, commercial and industrial services where flow is in one direction only.

Operation: Water flows through the meter's strainer and into the measuring chamber where it causes the disc to nutate. The disc, which moves freely, nutates on its own ball, guided by a thrust roller. A drive magnet transmits the motion of the disc to a follower magnet located within the permanently sealed register. The follower magnet is connected to the register gear train. The gear train reduces the disc nutations into volume totalization units displayed on the register or encoder face.

Operating Performance: The Recordall Disc Series meters meet or exceed registration accuracy for the low flow rates (95%), normal operating flow rates (100 ± 1.5%), and maximum continuous operation flow rates as specifically stated in AWWA Standard C700.

Construction: Recordall Disc meter construction, which complies with ANSI/AWWA standard C700, consists of three basic components: meter housing, measuring chamber, and permanently sealed register or encoder. The water meter is available in a lead-free bronze alloy. A corrosion-resistant engineered polymer material is used for the measuring chamber.

Magnetic Drive: Direct magnetic drive, through the use of high-strength magnets, provides positive, reliable and dependable register coupling for straight-reading or AMR/AMI meter reading options.

Tamper-Proof Features: Unauthorized removal of the register or encoder is inhibited by the option of a tamper detection seal wire screw, TORX® tamper-resistant seal screw or the proprietary tamper-resistant keyed seal screw. Each can be installed at the meter site or at the factory.

Maintenance: Badger Meter Recordall Disc Series meters are designed and manufactured to provide long-term service with minimal maintenance. When maintenance is required, it can be performed easily either at the meter installation or at any other convenient location.

To simplify maintenance, the register, measuring chamber, and strainer can be replaced without removing the meter housing from the installation. No change gears are required for accuracy calibration. Interchangeability of parts among like-sized meters minimizes spare parts inventory investment. The built-in strainer has an effective straining area of twice the inlet size.

Connections: Companion flanges in cast iron or NL bronze are available as options. Straight connection sets are available in NL bronze.



M120 M170

SPECIFICATIONS

Meter Model	M120	M170
Typical Operating Range (100% ± 1.5%)	2.5…120 gpm (0.57…27 m^3/hr)	2.5…170 gpm (0.57…39 m^3/hr)
Low Flow (Min. 95%)	1.25 gpm (0.28 m^3/hr)	1.5 gpm (0.34 m^3/hr)
Maximum Continuous Operation	80 gpm (18 m^3/hr)	100 gpm (23 m^3/hr)
Pressure Loss at Maximum Continuous Operation	4.8 psi at 80 gpm (0.33 bar at 18 m^3/hr)	3.3 psi at 100 gpm (0.23 bar at 23 m^3/hr)
Maximum Operating Temperature	80° F (26° C)	80° F (26° C)
Maximum Operating Pressure	150 psi (10 bar)	150 psi (10 bar)
Measuring Element	Nutating disc, positive displacement	Nutating disc, positive displacement
Meter Connections	1-1/2" AWWA two-bolt elliptical flange, drilled or 1-1/2…11-1/2 NPT internal pipe threads	2" AWWA two-bolt elliptical flange, drilled or 2…11-1/2 NPT internal pipe threads
Test Plugs	Optional 1" NPT test plug (TP)	Optional 1" NPT test plug (TP)

Materials

Meter Housing	Lead-free bronze alloy
Housing Top Plates	Lead-free bronze alloy
Measuring Chamber	Engineered polymer
Disc	Engineered polymer
Trim	Stainless steel
Strainer	Engineered polymer
Disc Spindle	Stainless steel
Magnet	Ceramic
Magnet Spindle	Stainless steel
Register Lid and Shroud	Engineered polymer, bronze

DIMENSIONS

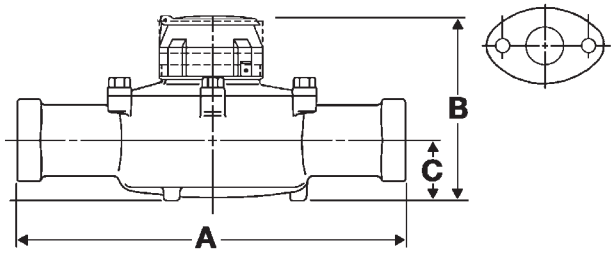

Meter Size	Meter Model	A Laying Length	B Height Reg./RTR	C Centerline Base	Width	Approx. Shipping Weight
1-1/2" (40 mm)	120 EL, Hex 120 EL, TP	12-5/8" (321 mm)	7" (178 mm)	2-3/8" (60 mm)	8-3/4" (222 mm)	19 lb (8.6 kg)
1-1/2" (40 mm)	120 ELL 120 ELL, TP	13" (330 mm)	7" (178 mm)	2-3/8" (60 mm)	8-3/4" (222 mm)	19 lb (8.6 kg)
2" (50 mm)	170 EL, Hex 170 EL, TP	15-1/4" (387 mm)	8" (203 mm)	2-7/8" (73 mm)	9-1/2" (241 mm)	30 lb (13.6 kg)
2" (50 mm)	170 ELL 170 ELL, TP	17" (432 mm)	8" (203 mm)	2-7/8" (73 mm)	8-1/2" (241 mm)	30 lb (13.6 kg)

EL = Elliptical | ELL = Elliptical Long | Hex = Hexagon, 1-1/2…11-1/2" NPT Thread | TP=Test Plug 1"

REGISTERS / ENCODERS

Standard—Sweep-Hand Registration

The standard register is a straight-reading, permanently sealed magnetic drive register. Dirt, moisture, tampering and lens fogging problems are eliminated. The register has a six-odometer wheel totalization display, 360° test circle with center sweep hand, and flow finder to detect leaks. Register gearing is made of self-lubricating engineered polymer, which minimizes friction and provides long life. The multi-position register simplifies meter installation and reading. The register capacity is 10,000,000 gallons (1,000,000 ft³, 100,000 m³).

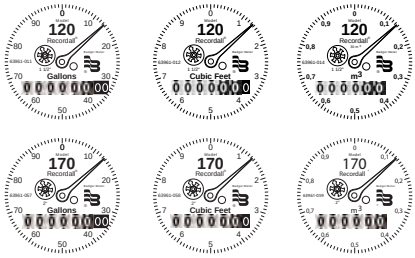

Meter Model	Gallon	Cubic Feet	Cubic Meter
120	100	10	1/0.1
170	100	10	1

Optional—Encoders for AMR/AMI Reading Solutions

AMR/AMI solutions are available for all Recordall Disc Series meters. All reading options can be removed from the meter without disrupting water service. Badger Meter encoders provide years of reliable, accurate readings for a variety of applications and are also available pre-wired to Badger Meter approved AMR/AMI solutions. See details at **www.badgermeter.com**.

PRESSURE LOSS CHARTS

1-1/2" Meter

Rate of Flow in Gallons per Minute

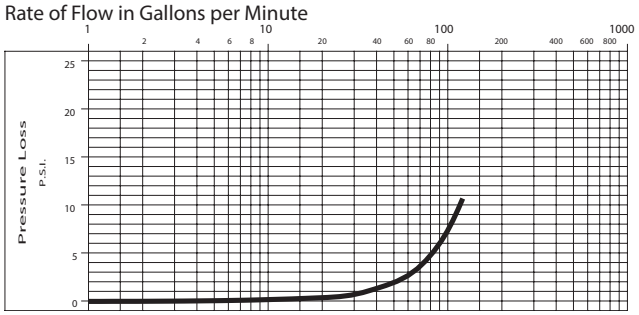

2" Meter

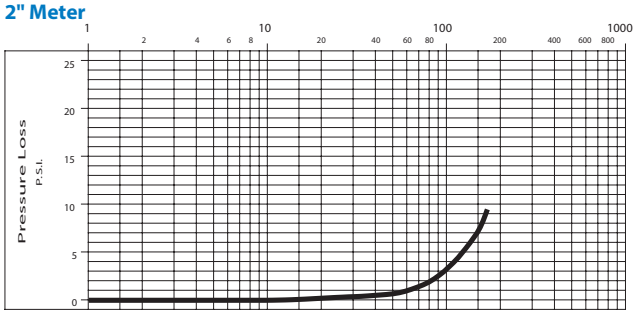

ACCURACY CHARTS

1-1/2" Meter

Rate of Flow in Gallons per Minute

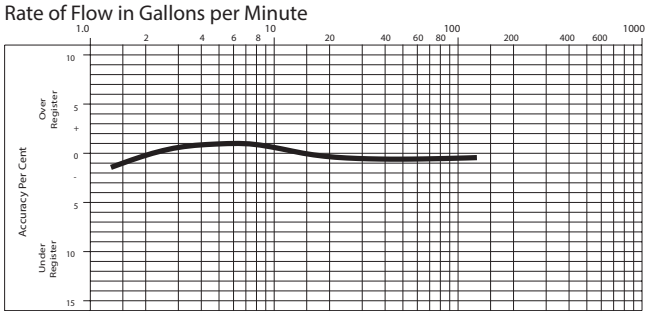

2" Meter

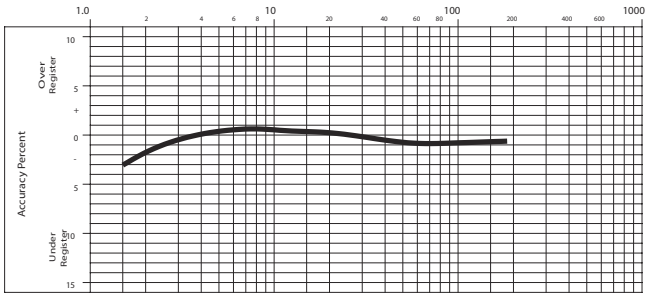

Recordall is a registered trademark of Badger Meter, Inc. Other trademarks appearing in this document are the property of their respective entities.
Due to continuous research, product improvements and enhancements, Badger Meter reserves the right to change product or system specifications without notice, except to the extent an outstanding contractual obligation exists. © 2013 Badger Meter, Inc. All rights reserved.

www.badgermeter.com

The Americas | Badger Meter | 4545 West Brown Deer Rd | PO Box 245036 | Milwaukee, WI 53224-9536 | 800-876-3837 | 414-355-0400
México | Badger Meter de las Americas, S.A. de C.V. | Pedro Luis Ogazón N°32 | Esq. Angelina N°24 | Colonia Guadalupe Inn | CP 01050 | México, DF | México | +52-55-5662-0882
Europe, Middle East and Africa | Badger Meter Europa GmbH | Nurtinger Str 76 | 72639 Neuffen | Germany | +49-7025-9208-0
Czech Republic | Badger Meter Czech Republic s.r.o. | Mařikova 2082/26 | 621 00 Brno, Czech Republic | +420-5-41420411
Slovakia | Badger Meter Slovakia s.r.o. | Racianska 109/B | 831 02 Bratislava, Slovakia | +421-2-44 63 83 01
Asia Pacific | Badger Meter | 80 Marine Parade Rd | 21-04 Parkway Parade | Singapore 449269 | +65-63464836
China | Badger Meter | 7-1202 | 99 Hangzhong Road | Minhang District | Shanghai | China 201101 | +86-21-5763 5412

Legacy Document Numbers: RDM-DS-00071-EN and RDM-DS-00072-EN

Badger Meter

Recordall® Disc Meters

Engineered Polymer, Sizes 5/8", 5/8" × 3/4", 3/4" and 1"
NSF/ANSI Standards 61 and 372 Certified



Model 25



Model 40

DESCRIPTION

The Recordall Engineered Polymer Disc Series meters meet or exceed the most recent revision of AWWA Standard C710. Recordall Engineered Polymer Disc Series meters comply with the lead-free provisions of the Safe Drinking Water Act, are certified to NSF/ANSI Standards 61 and 372 (Trade Designations: M25 PN and M40 PN) and carry the NSF-61 mark on the housing. All components of the lead-free, engineered polymer meter (disc, chamber, housing, seals, and so on) comprise the certified system.

Applications: For use in measurement of potable cold water in residential, commercial and industrial services where flow is in one direction only.

Operation: Water flows through the meter's strainer and into the measuring chamber where it causes the disc to nutate. The disc, which moves freely, nutates on its own ball, guided by a thrust roller. A drive magnet transmits the motion of the disc to a follower magnet located within the permanently sealed register. The follower magnet is connected to the register gear train. The gear train reduces the disc nutations into volume totalization units displayed on the register or encoder face.

Operating Performance: The Recordall Disc Series meters meet or exceed registration accuracy for the low flow rates (95%), normal operating flow rates (100 ± 1.5%), and maximum continuous operation flow rates as specifically stated in AWWA Standard C710.

Construction: Recordall Disc meter construction, which complies with ANSI/AWWA standard C710, consists of three basic components: meter housing, measuring chamber, and permanently sealed register or encoder. The water meter is engineered polymer with externally-threaded spuds. A corrosion-resistant engineered polymer material is used for the measuring chamber.

Magnetic Drive: Direct magnetic drive, through the use of high-strength magnets, provides positive, reliable and dependable register coupling for straight-reading or AMR/AMI meter reading options.

Tamper-Proof Features: Unauthorized removal of the register or encoder is inhibited by the option of a tamper detection seal wire screw, TORX® tamper-resistant seal screw or the proprietary tamper-resistant keyed seal screw. Each can be installed at the meter site or at the factory.

Maintenance: Badger Meter Recordall Disc Series meters are designed and manufactured to provide long-term service with minimal maintenance. When maintenance is required, it can be performed easily either at the meter installation or at any other convenient location.

To simplify maintenance, the register, measuring chamber, and strainer can be replaced without removing the meter housing from the installation. No change gears are required for accuracy calibration. Interchangeability of parts among like-sized meters and meter models also minimizes spare parts inventory investment. The built-in strainer has an effective straining area of twice the inlet size.

Connections: Tailpieces/Unions for installations of meters on various pipe types and sizes, including misaligned pipes, are available as an option.

Meter Spud and Connection Sizes

Size Designation	×	"L" Laying Length	"B" Bore Dia.	Coupling Nut and Spud Thread	Tailpiece Pipe Thread (NPT)
5/8"	×	7-1/2"	5/8"	3/4" (5/8")	1/2"
5/8" × 3/4"	×	7-1/2"	5/8", 3/4"	1" (3/4")	3/4"
3/4"	×	9"	3/4"	1" (3/4")	3/4"
1"	×	10-3/4"	1"	1-1/4" (1")	1"

SPECIFICATIONS

	5/8"	5/8" × 3/4"	3/4"	1"
Typical Operating Range (100% ± 1.5%)	1/2…25 gpm (0.11…5.7 m^3/hr)	1/2…25 gpm (0.11…5.7 m^3/hr)	1/2…30 gpm (1.0…6.8 m^3/hr)	3/4…50 gpm (0.17…11.3 m^3/hr)
Low Flow (Min. 98.5%)	1/4 gpm (0.057 m^3/hr)	1/4 gpm (0.057 m^3/hr)	1/4 gpm (0.057 m^3/hr)	3/8 gpm (0.085 m^3/hr)
Maximum Continuous Operation	15 gpm (3.4 m^3/hr)	15 gpm (3.4 m^3/hr)	15 gpm (3.4 m^3/hr)	25 gpm (5.7 m^3/hr)
Pressure Loss at Maximum Continuous Operation	4.2 psi at 15 gpm (0.29 bar at 3.4 m^3/hr)	2.8 psi at 15 gpm (0.19 bar at 3.4 m^3/hr)	2.8 psi at 15 gpm (0.19 bar at 3.4 m^3/hr)	3.1 psi at 12 gpm (0.21 bar at 5.7 m^3/hr)
Maximum Operating Temperature	80° F (26° C)	80° F (26° C)	80° F (26° C)	80° F (26° C)
Maximum Operating Pressure	150 psi (10 bar)	150 psi (10 bar)	150 psi (10 bar)	150 psi (10 bar)
Measuring Element	Nutating disc, positive displacement			
Meter Connections	*Available in NL bronze and engineered polymer to fit spud thread bore diameter sizes:*			
	5/8" (DN 15 mm)	3/4" (DN 15 mm)	3/4" (DN 15 mm)	1" (DN 25 mm)

Materials

Meter Housing	Engineered polymer
Housing Bottom Plates	Engineered polymer
Measuring Chamber	Engineered polymer
Disc	Engineered polymer
Strainer	Engineered polymer
Disc Spindle	Stainless steel
Magnet	Ceramic
Magnet Spindle	Stainless steel
Register Lid and Shroud	Engineered polymer, bronze

DIMENSIONS

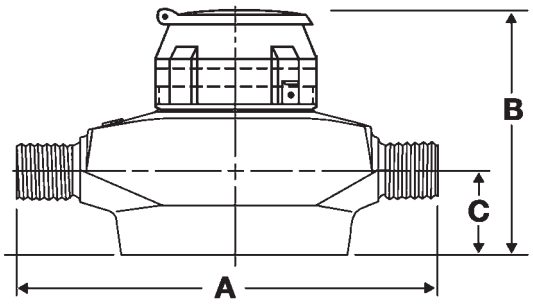

Meter Size	Meter Model	A Laying Length	B Height Reg./RTR	C Centerline Base	Width	Approx. Shipping Weight
5/8" (15 mm)	25	7-1/2" (190 mm)	5-1/16" (128 mm)	1-3/4" (44 mm)	4-13/16" (122 mm)	2-1/2 lb (1 kg)
5/8" x 3/4" (15 mm)	25	7-1/2" (190 mm)	5-1/16" (128 mm)	1-3/4" (44 mm)	4-13/16" (122 mm)	2-1/2 lb (1 kg)
3/4" (20 mm)	25	9" (229 mm)	5-1/16" (128 mm)	1-3/4" (44 mm)	4-13/16" (122 mm)	3 lb (1.4 kg)
1" (25 mm)	40	10-3/4" (273 mm)	5-3/4" (146 mm)	1-15/16" (49 mm)	5-15/16" (151 mm)	5 lb (2.3 kg)

REGISTERS / ENCODERS

Standard—Sweep-Hand Registration

The standard register is a straight-reading, permanently sealed magnetic drive register. Dirt, moisture, tampering and lens fogging problems are eliminated. The register has a six-odometer wheel totalization display, 360° test circle with center sweep hand, and flow finder to detect leaks. Register gearing is made of self-lubricating engineered polymer, which minimizes friction and provides long life.
The multi-position register simplifies meter installation and reading. The register capacity is 10,000,000 gallons (1,000,000 ft^3, 100,000 m^3).

A Model 25 register is used in this example:

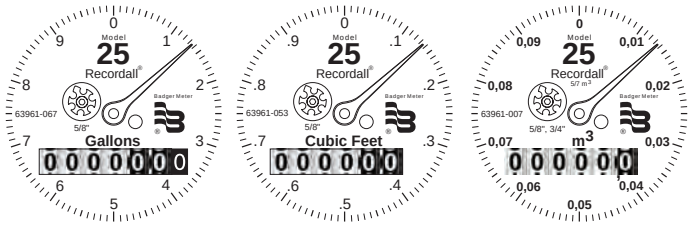

Meter Model	Gallon	Cubic Feet	Cubic Meter
25	10	1	0.1/0.01
	10	1	0.1/0.01
	10	1	0.1/0.01
40	10	1	0.1/0.01

Optional—Encoders for AMR/AMI Reading Solutions

AMR/AMI solutions are available for all Recordall Disc Series meters. All reading options can be removed from the meter without disrupting water service. Badger Meter encoders provide years of reliable, accurate readings for a variety of applications and are also available pre-wired to Badger Meter approved AMR/AMI solutions. See details at **www.badgermeter.com**.

PRESSURE LOSS CHARTS

Rate of Flow in Gallons per Minute

Model 25 5/8"

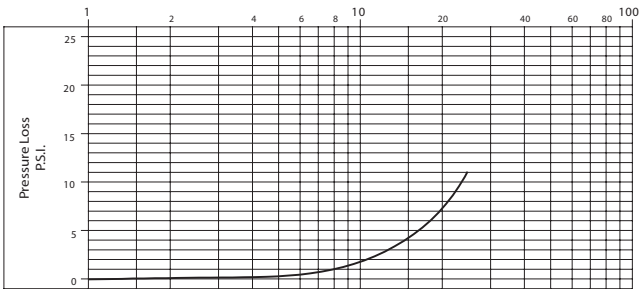

Model 25 5/8" x 3/4"

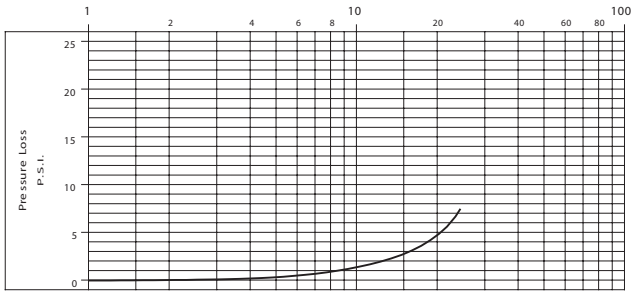

Model 25 3/4"

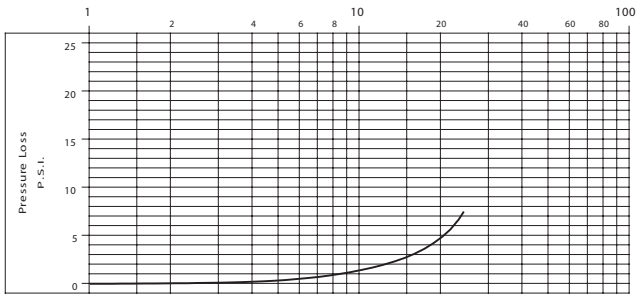

Model 40 1"

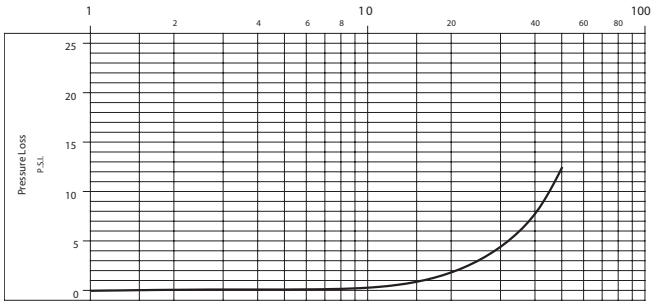

ACCURACY CHARTS

Model 25 5/8"

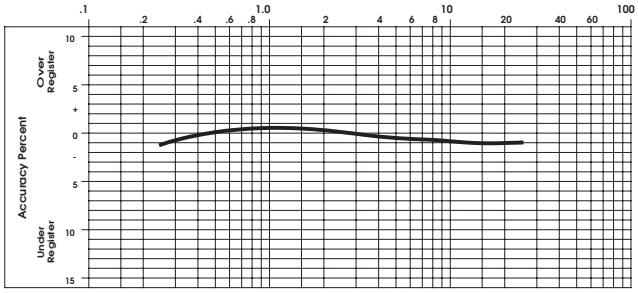

Model 25 5/8" x 3/4"

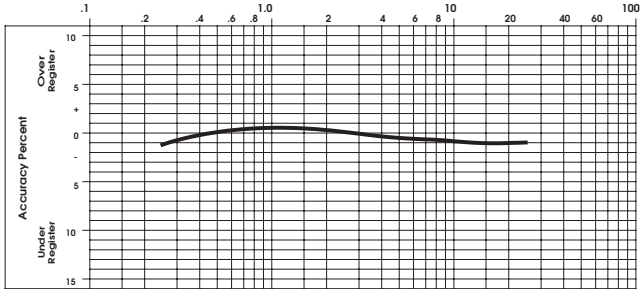

Model 25 3/4"

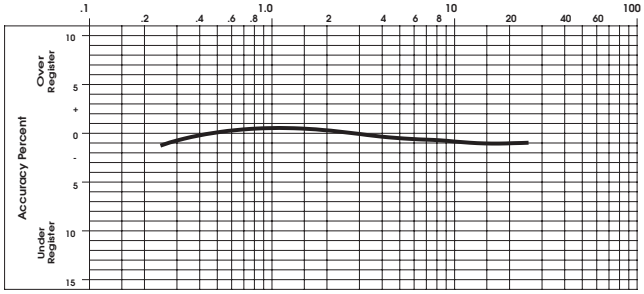

Model 40 1"

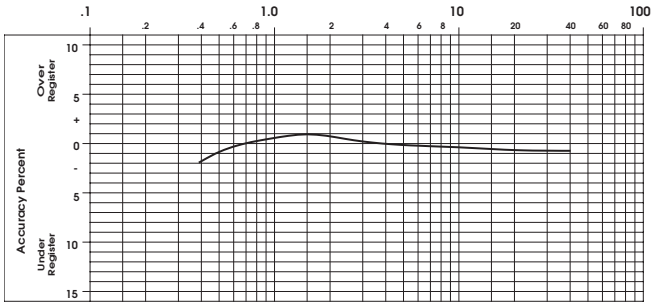

Making Water Visible®

MAKING WATER VISIBLE and RECORDALL are registered trademarks of Badger Meter, Inc. Other trademarks appearing in this document are the property of their respective entities. Due to continuous research, product improvements and enhancements, Badger Meter reserves the right to change product or system specifications without notice, except to the extent an outstanding contractual obligation exists. © 2014 Badger Meter, Inc. All rights reserved.

www.badgermeter.com

The Americas | Badger Meter | 4545 West Brown Deer Rd | PO Box 245036 | Milwaukee, WI 53224-9536 | 800-876-3837 | 414-355-0400
México | Badger Meter de las Americas, S.A. de C.V. | Pedro Luis Ogazón N°32 | Esq. Angelina N°24 | Colonia Guadalupe Inn | CP 01050 | México, DF | México | +52-55-5662-0882
Europe, Middle East and Africa | Badger Meter Europa GmbH | Nurtinger Str 76 | 72639 Neuffen | Germany | +49-7025-9208-0
Europe, Middle East Branch Office | Badger Meter Europe | PO Box 341442 | Dubai Silicon Oasis, Head Quarter Building, Wing C, Office #C209 | Dubai / UAE | +971-4-371 2503
Czech Republic | Badger Meter Czech Republic s.r.o. | Mařikova 2082/26 | 621 00 Brno, Czech Republic | +420-5-41420411
Slovakia | Badger Meter Slovakia s.r.o. | Racianska 109/B | 831 02 Bratislava, Slovakia | +421-2-44 63 83 01
Asia Pacific | Badger Meter | 80 Marine Parade Rd | 21-04 Parkway Parade | Singapore 449269 | +65-63464836
China | Badger Meter | 7-1202 | 99 Hangzhong Road | Minhang District | Shanghai | China 201101 | +86-21-5763 5412

Legacy Document Numbers: RDM-DS-00067, 68, 69, 70

Badger Meter

Recordall®

Transmitter Register (RTR)

DESCRIPTION

APPLICATIONS: The Recordall® Transmitter Register (RTR®) is designed for use with all Recordall Disc, Turbo, Compound and Fire Service Meters to provide output compatibility with ORION®, GALAXY, Itron® ERT®, and Badger Meter, Inc. approved AMR technology solutions.

RESOLUTION: Digital output from the RTR typically has resolution of 1/10th of the register test circle (resolution may vary in some cases). The electronic resolution table in this brochure lists minimum output resolution for all Recordall meter applications.

MOUNTING: The RTR in its shroud assembly uses a bayonet mount compatible with all Recordall Disc and Turbo meters. A TORX® seal screw is provided to allow positioning of the register for the most convenient reading and to secure the register to the meter body in a tamper resistant mode. The RTR can be removed from the meter without disrupting water service.

MAGNETIC DRIVE: Direct drive high-strength magnetic coupling through the meter body to the wetted magnet provides reliable and dependable register coupling.

SEALED REGISTER: The RTR local register consists of a six-digit straight-reading mechanical odometer totalizer (located in the six o'clock position), a 360° test circle with sweep hand, and a flow finder to detect leaks. The register gearing is self-lubricating thermoplastic to minimize friction and provide long, reliable life. Permanent sealing eliminates moisture, dirt, and other contaminants. The leak rate of the seal is less than 10-6 cc/sec as tested by a helium mass spectrometer.

TAMPER-PROOF FEATURES: Customer removal of the RTR can be prevented by using a tamper resistant TORX seal screw. TORX seal screws are provided as standard accessories with the RTR. Optional tamper detection seal wire screws are also available.

CONSTRUCTION: The housing of the RTR is constructed of a strengthened glass lens top and a corrosion-resistant metal bottom. Internal construction materials are thermoplastics for long-life and high reliability. The integrity of the adhesive seal joining the glass top to the metal base provide unmatched protection in water meter applications. A corrosion and tamper resistant TORX seal screw is provided to secure the RTR to the meter. The shroud assembly is thermoplastic.

TEMPERATURE: The operating range of the RTR is –40…49° C (–40…120° F). The water meter should not be subjected to temperatures below freezing.

MOISTURE: The RTR achieves true water resistance due to the adhesive technology used in the sealing process. Leak rates less than 10-6 cc/sec, as tested by a helium mass spectrometer, are comparable to a true hermetic seal. Due to this unique sealing process, the RTR exceeds all applicable requirements of AWWA Standard C707 regarding moisture intrusion. Register fogging and condensation are no longer an issue.

WIRE CONNECTIONS: The RTR is provided as either a factory prewired assembly or as a register with pre-sized wire harness available for connection in the field.



SPECIFICATIONS

Transmitter/Register	Straight reading, permanently sealed, magnetic drive
Unit of Measure	U.S. gallons, cubic feet, cubic meters, clearly identified on register face
Number Wheels	Six with 3/16" high numerals font type
Test Circle	360° circle with ten major increments with ten divisions each
Weight	9 ounces
Humidity	0…100% condensing
Temperature	–40…49° C (–40…120° F)
Signal Characteristics	Open Drain (FET)
Visual Resolution	1/100th of Test Circle
Electronic Resolution	1/10th of Test Circle
Typical Signal Duration	15…75 ms @ 25° C (77° F) 8…75 ms over operating temperature range at 67 µA
On State Resistance	7.5 Ohms @ 25° C (77° F)
Power Source	External
Maximum Switching	30V DC @ 1 mA @ 25° C (77° F)

ELECTRONICS: The piezoelectric switch circuit board is completely sealed against moisture inside the unit and sealed to ensure protection from humidity.

ELECTRICAL: The electronic circuitry is designed to provide immunity to electrical surges and transients per IEC801-2, IEC801-4 Severity Level 4.

OPERATING CHARACTERISTICS: The RTR has an output equal to 1/10th of the meter test circle with the characteristics of an open drain FET. The on-state condition is a solid-state switch closure. Off-state condition is an open circuit. Powered by an external source, the RTR has a maximum rating of 30V DC at 1 mA (25° C).

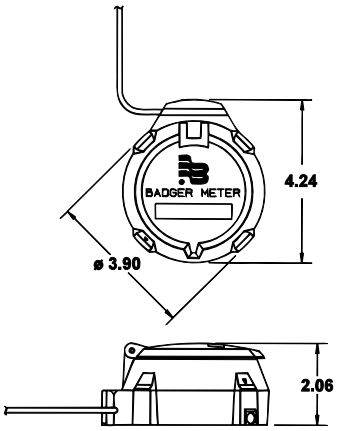

Dimensional Drawing

MEASUREMENT RESOLUTION: The minimum electronic resolution of the RTR is as noted below. To verify the correct resolution for your application, contact your Badger Meter regional sales office.

RECORDALL Disc Series	Size	Resolution Gallons	Resolution Cubic Feet (ft^3)	Resolution Cubic Meters (m^3)
M25	5/8″	1	0.1	0.01
M25	3/4″	1	0.1	0.01
M35	3/4″	1	0.1	0.01
M40	1″	1	0.1	0.01
M55	1″	1	0.1	0.01
M70	1″	1	0.1	0.01
M120	1-1/2″	10	1	0.1
M170	2″	10	1	0.1

RECORDALL Turbo Series	Resolution Gallons	Resolution Cubic Feet (ft^3)	Resolution Cubic Meters (m^3)
1-1/2″	100	10	0.1
2″	100	10	0.1
3″	100	10	0.1
4″	100	10	0.1
6″	100	10	1
8″	100	10	1
10″	100	10	1
12″	1000	100	1
16″	1000	100	10
20″	1000	1000	10

IMPORTANT

The RTR® should only be connected to a Badger Meter, Inc. approved product. Connection to an unapproved product will void the RTR warranty.

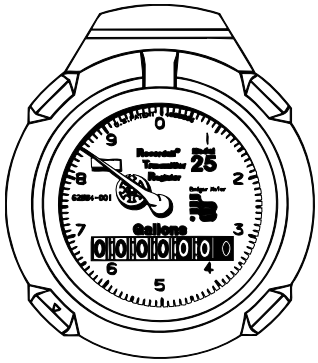

RTR Register

Fire Service Meters	Resolution Gallons	Resolution Cubic Feet (ft^3)	Resolution Cubic Meters (m^3)
3″	100	10	0.1
4″	100	10	0.1
6″	100	10	1
8″	100	10	1
10″	100	10	1

RECORDALL Compound Series	Resolution Gallons	Resolution Cubic Feet (ft^3)	Resolution Cubic Meters (m^3)
2″	100	10	0.1
3″	100	10	0.1
4″	100	10	0.1
6″	100	10	1

Resolution stated as summed total with (2) RTRs, Summator/ Splitter and a single AMR module. Please see the Turbo Series and Disc Series sections for individual high and low side resolution.

Fire Series Assemblies (FSA)	Resolution Gallons	Resolution Cubic Feet (ft^3)	Resolution Cubic Meters (m^3)
4″	100	10	0.1
6″	100	10	1
8″	100	10	1
10″	100	10	1

Resolution stated as summed total with two RTRs, Summator/ Splitter and a single AMR module. Please see the Turbo Series and Disc Series sections for individual mainline and by-pass resolution.

ORION, Recordall, and RTR are registered trademarks of Badger Meter, Inc.
Other trademarks appearing in this document are the property of their respective entities.
Due to continuous research, product improvements and enhancements, Badger Meter reserves the right to change product or system specifications without notice, except to the extent an outstanding contractual obligation exists. © 2012 Badger Meter, Inc. All rights reserved.
Badger Meter | PO Box 245036, Milwaukee, Wisconsin 53224-9536 | 800-876-3837 | infocentral@badgermeter.com

Badger Meter

Recordall® Transmitter Register (RTR®)
Remote Electronic Display (RED)

APPLICATION

The Model RED Remote Electronic Display unit is designed to provide remote visual readings when connected directly to any of Badger's Recordall® Transmitter Registers (RTR®). The RED is used to read compatible RTR transmitters that are not easily accessible or are in difficult to read locations. Installations such as inside houses or buildings, meter vaults, or dangerous industrial locations are ideal for the RED. The RED can also be used when old style generators have been replaced with RTR style transmitters to provide dependable remote readings.

OPERATION

The Model RED is a battery operated device. When attached to any of Badger's RTR transmitters it is designed to provide the same output resolution as the RTR. To conserve battery life the LCD is awakened only when the internal membrane switch has been activated. This is easily accomplished by tapping the target circle on the register display. This will bring up the meter's current reading for 20 seconds, after which the display will return to the sleep mode. The RED is easily programmable in the field by tapping of a PIN number on the front of the display. The RED will display and increment all digits of the RTR register including the sweep hand position, but will use a decimal point to show which are significant for billing purposes. Billing digits are those to the left of the decimal point

OPERATING PERFORMANCE

The Model RED meets AWWA Standard C706 for direct-reading remote registration systems.

TAMPER-PROOF FEATURES

The Model RED is supplied with an anti-tamper indicator that detects both open and short circuit conditions. Any time the connection is interrupted a visual alarm appears on the display (tamper designated as an "E" appears in the far left side of the reading.) To reset the tamper, the RED must be reprogrammed. The unit is also supplied with a tamper resistant TORX® seal screw to prevent access to the unit.



MAINTENANCE

There is no maintenance since the electronics and battery are encapsulated and not accessible.

FEATURES

- Environmentally sealed
- Field programmable
- Tamper indicator
- One model usable with any Badger® meter equipped with an RTR
- Mounts on Badger ROM Footprint
- TORX® seal screw security
- Membrane "TAP" switch for viewing
- 10 year projected battery life

SPECIFICATIONS

Operating Temperature	-13 to 140°F (-25 to 60°C)
Meter Compatibility	Any Badger meter equipped with an RTR; and Magnetoflow® mag meters
Connectivity	All Badger RTR transmitter and summator/splitter products
Dimensions	L 4.25" x W 3.9" x H 1.6"
Weight	0.3 Lbs.
Display	LCD, 8 characters .25 inches high; 7 digits for meter reading plus 1 character for system indicators
Power	(1) AA cell battery
Construction	High impact thermoplastic,weather and UV resistant
Wire Size & Distance	Utilizes a RTR connecting cable up to 75 feet long (available from the factory).

DIMENSIONS

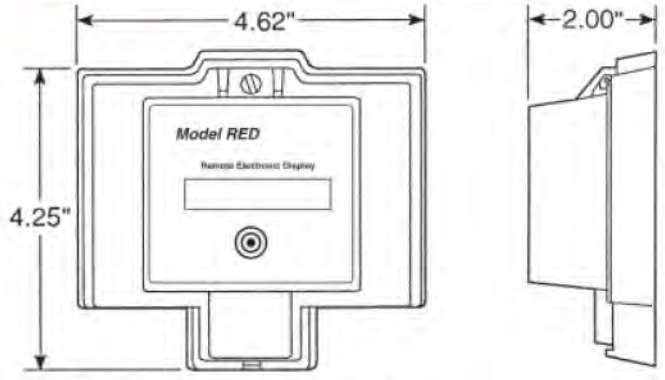

Remote Register

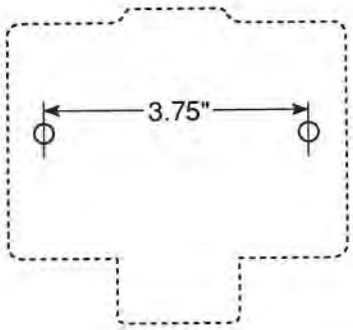

Mounting Hole Locations

Recordall® and RTR® are registered trademarks of Badger Meter, Inc.
Copyright 2010, Badger Meter, Inc. All rights reserved.

Due to continuous research, product improvements and enhancements, Badger Meter reserves the right to change product or system specifications without notice, except to the extent an outstanding contractual obligation exists.

Badger Meter | P.O. Box 245036, Milwaukee, Wisconsin 53224-9536
800-876-3837 | infocentral@badgermeter.com | www.badgermeter.com

APPENDIX T8

Pressure Switch

WEATHERPROOF DIAPHRAGM OPERATED PRESSURE SWITCHES

Visible Setpoint, Fixed Deadband, Pressure Ranges to 1400 psi



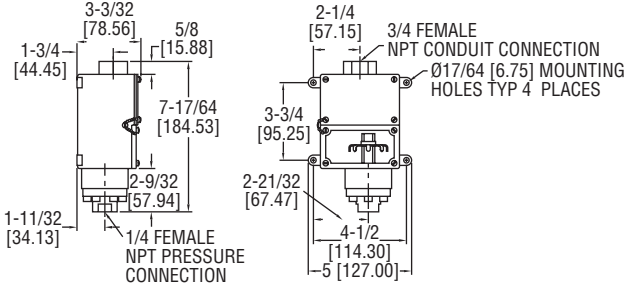

With extremely rugged construction the **SERIES 1000W** provides excellent reliability in chemical, petroleum and industrial plants. Bellville spring movement permits mounting of control in any position and helps prevent contact chatter. New design also provides high over-pressure protection. Weatherproof housing is standard.

FEATURES/BENEFITS
- Weatherproof housing is ideal for a wide variety of applications where dust or water is present
- Spring movement design provides for control in any mounting position and prevents contact chatter reducing false or inconsistent switching

APPLICATIONS
- Chemical, petroleum, food and drug processing industries
- Process and Industrial applications

SPECIFICATIONS

Wetted Materials: See pressure chamber and diaphragm material in model chart.
Temperature Limits: -30 to 170°F (-35 to 77°C).
Pressure Limit: 3000 psig (206.8 bar).
Enclosure Rating: Weatherproof, meets NEMA 4X (IP66).
Switch Type: SPDT snap switch.
Electrical Rating: 15 A @ 125/250 VAC resistive.
Electrical Connections: Screw type.
Conduit Connection: 3/4″ female NPT.
Process Connection: 1/4″ female NPT.
Mounting Orientation: Any position.
Set Point Adjustment: Internal thumbwheel.
Weight: 3 lb (1.4 kg).
Deadband: See model chart.
Agency Approvals: CE, UL.

MODEL CHART

Aluminum Pressure Chamber Polyamide Diaph. Model	Price	316 SS Pressure Chamber FEP Diaph. Model	Price	Adjustable Operating Range psig (bar)	Approx.* Deadband (Fixed) psig (bar)
1003W-A1-D	$283.00	1003W-B3-D	$327.00	5 to 40 (.48 to 2.8)	2 (.14)
1004W-A1-D	283.00	1004W-B3-D	327.00	10 to 70 (.69 to 4.8)	4 (.28)
1005W-A1-D	283.00	1005W-B3-D	327.00	25 to 200 (1.7 to 13.8)	8 (.55)
1006W-A1-D	283.00	1006W-B3-D	327.00	50 to 350 (3.5 to 24.1)	15 (1.0)
1007W-A1-D	283.00	1007W-B3-D	327.00	75 to 550 (5.2 to 37.9)	30 (2.1)
1008W-A1-D	283.00	1008W-B3-D	327.00	100 to 900 (6.9 to 62.1)	50 (3.5)
1009W-A1-D	283.00	1009W-B3-D	327.00	200 to 1400 (13.8 to 96.5)	75 (5.2)

*Deadband 10-15% larger when using 316 SS diaphragm.
Note: To order, change A1 to B2 for 316 SS diaphragm and pressure chamber.
Example: 1003W-B2-D. Values shown are for mid-scale.

Series 1000W Diaphragm Operated Pressure Switches

Installation and Operating Instructions



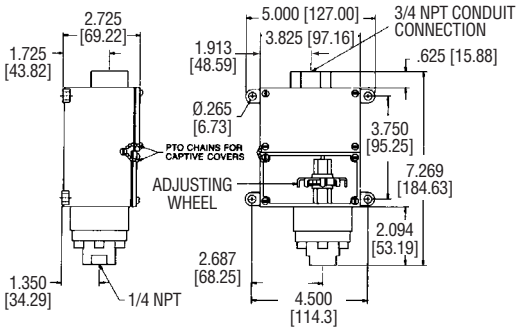

This control is operated by a negative-rate Bellville spring-augmented diaphragm.

Location and Mounting
Select a location recommended by the equipment manufacturer. Use the four (4) lugs on the case to mount the control on a panel or smooth wall surface, or mount directly by the pressure connection.

The control is not position-sensitive and may be mounted in any position. However, vertical is preferred when there is a possibility of sludge accumulation or condensed water freezing in the pressure chamber.

Pressure Connection
The pressure connection is a standard female 1/4″ NPT taper pipe thread. Pipe thread sealant tape or pipe thread sealant should be used to assure a pressure-tight joint.

Wiring
A 3/4″ conduit connection is provided for wiring. Wire in accordance with local electrical codes or equipment manufacturer's instructions. Use a short piece of BX between rigid conduit and control so that control will not be subject to the stress of conduit expansion and contraction. Electrical ratings are shown on the label.
DO NOT OVERLOAD

Setting Operating Point
Remove the transparent cover over the adjusting wheel. Move the wheel by hand to the desired pressure on the vertical scale. If the adjusting wheel is difficult to move, a small screwdriver inserted in the adjusting wheel arms will provide extra leverage. A stop is provided at the top and bottom of the scale to prevent setting beyond the control's range. Dial markings are for the High operating point. Switch will reset at a lower pressure. Dial markings are a guide for setting. Actual setting should be checked with a good pressure gage.

Warning: A failure resulting in injury or damage may be caused by overpressures, excessive vibration or pressure pulsation, excessive temperature, corrosion of pressure-containing parts and movement assembly, electrical overload or other misuse.

SPECIFICATIONS
Wetted Materials: Aluminum pressure chamber with polyimide diaphragm or 316 SS pressure chamber with FEP diaphragm.
Temperature Limits: -30 to 170°F (-35 to 77°C).
Pressure Limit: 3000 psig (206.8 bar).
Enclosure Rating: Weatherproof, meets NEMA 4X.
Switch Type: SPDT snap switch.
Electrical Rating: 15A @ 125/250 VAC resistive.
Wiring Connections: Screw type.
Conduit Connection: 3/4″ female NPT.
Process Connection: 1/4″ female NPT.
Mounting Orientation: Any position.
Set Point Adjustment: Internal thumbwheel.
Weight: 3 lb (1.4 kg).
Deadband: See chart
Agency Approvals: CE, UL.

Note: When used on steam, a pigtail siphon and Type 3 (FEP) diaphragm should be used. Maximum case ambient temperature: 170° F (76.7° C).

MERCOID DIVISION
DWYER INSTRUMENTS, INC.
P.O. BOX 258 • MICHIGAN CITY, INDIANA 46360 U.S.A.

Phone: 219/879-8000
Fax: 219/872-9057

www.dwyer-inst.com
e-mail: info@dwyermail.com

Operating Rages/Deadband			
Range No.	**psig (bar)**	**Approx. Deadband (fixed)* psig (bar)**	**Max. press. without bursting psig (bar)**
3	5-40 (0.34 - 2.76)	2 (0.14)	3000 (206.7)
4	10-70 (0.69 - 4.82)	4 (0.28)	3000 (206.7)
5	25 - 200 (1.72 - 13.78)	8 (0.55)	3000 (206.7)
6	50 - 350 (3.45 - 24.12)	15 (1.03)	3000 (206.7)
7	75 - 550 (5.17 - 37.90)	30 (2.07)	3000 (206.7)
8	100 - 900 (6.89 - 62.01)	50 (3.45)	3000 (206.7)
9	200 - 1400 (13.78 - 96.46)	75 (5.17)	3000 (206.7)

* Deadband is 10% larger when using 316SS diaphragm or Code F switch.

Electrical Rating										
		AC Capacity			**DC Capacity**		**Horse Power**			
							AC		**DC**	
Code	**No. Switches Action**	**125V**	**250V**	**480V**	**125V**	**250V**	**125V**	**250V**	**125V**	**250V**
D	1 Snap SPDT	15A	15A	NA			1/8	1/4	NA	NA
J	1 Snap SPDT	15A	15A	15A	0.5A (2)	0.25A (2)	1/8	1/4	NA	NA

Note (2) Resistive

APPENDIX T9

Wireless Alarm Transmitters

Product Data Sheet
August 2016
00813-0100-4702, Rev JB

Rosemount™ 702 Wireless Discrete Transmitter



WirelessHART IEC CE

- An installation-ready solution that provides dual channel, discrete input, discrete output, or leak detection input options
- Discrete single or dual switch input with logic for limit contact and opposing contact applications
- Momentary inputs are continuously measured between wireless updates
- Dual channels are each configurable for discrete input or discrete output
- Self-organizing network delivers information rich data with >99% data reliability

EMERSON
Process Management

Emerson's Smart Wireless Solution

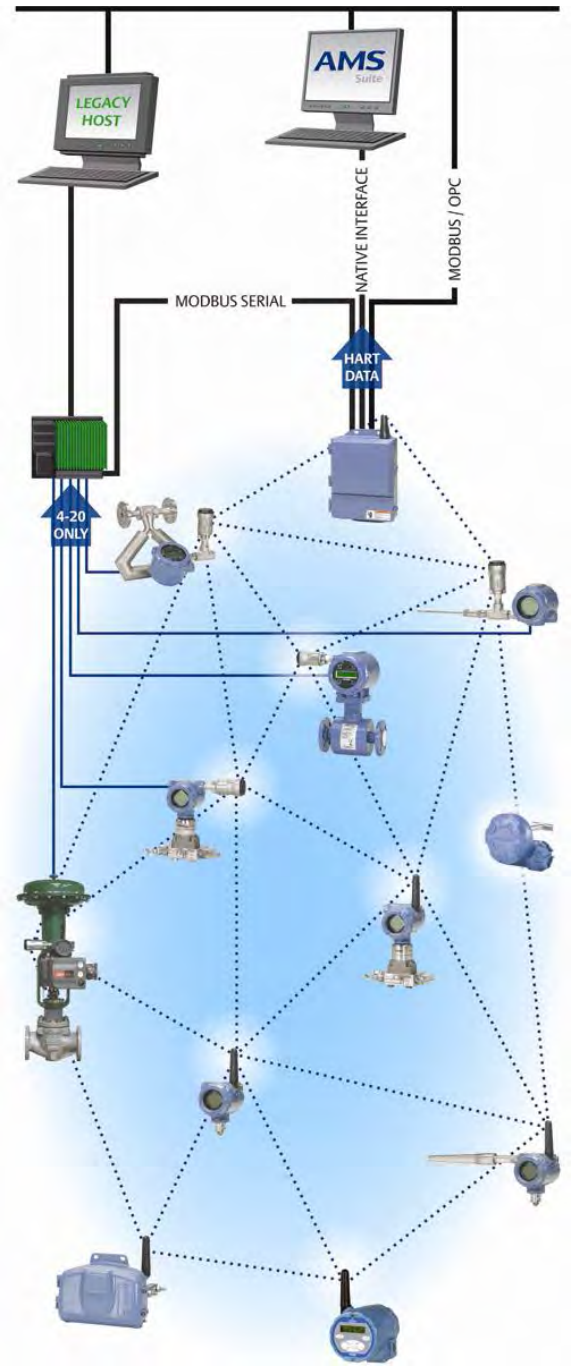

IEC 62591 (*Wireless*HART®)... the industry standard

Self-organizing, adaptive mesh routing

- No wireless expertise required, network automatically finds the best communication paths
- The self-organizing, self-healing network manages multiple communication paths for any given device. If an obstruction is introduced into the network, data will continue to flow because the device already has other established paths. The network will then lay in more communication paths as needed for that device.

Emerson's Smart Wireless

Reliable wireless architecture

- Standard IEEE 802.15.4 radios
- 2.4 GHz ISM band sliced into 15 radio channels
- Time synchronized channel hopping to avoid interference from other radios, Wi-Fi, and EMC sources and increase reliability
- Direct sequence spread spectrum (DSSS) technology delivers high reliability in challenging radio environment

SmartPower™ solutions

- Optimized Emerson™ instrumentation, both hardware and software, to extend power module life
- Intrinsically safe power module allows field replacements without removing the transmitter from the process, keeping personnel safe, and reducing maintenance costs.

Contents

Ordering Information 3
Specifications 5
Product Certifications 13
Dimensional Drawings 17

Ordering Information

Specification and selection of product materials, options, or components must be made by the purchaser of the equipment. See page 5 for more information on material selection.

Table 1. Rosemount 702 Wireless Discrete Transmitter Ordering Information

★ The Standard offering represents the most common options. The starred options (★) should be selected for best delivery. The Expanded offering is subject to additional delivery lead time.

Product description		
702	Discrete transmitter	★
Transmitter type		
D	Wireless field mount	★
Output		
X	Wireless	★
Measurement		
32	Discrete dual input (dry contact), detects momentary inputs and counts	★
42	Discrete dual input or output, configurable	★
61(1)	Liquid hydrocarbon detection (for use with TraceTek® fast fuel sensor or TraceTek sensing cable)	★
Housing		
D	Dual compartment housing - aluminum	★
E	Dual compartment housing - SST	★
Conduit threads		
1	1/2–14 NPT	★

Certifications		**Measurement option codes**	
I5	FM intrinsically safe, Non-incendive, and Dust ignition-proof	32, 61	★
I6	CSA intrinsically safe	32, 61	★
I1	ATEX intrinsically safe	32, 61	★
IU	ATEX intrinsically safe for zone 2	32, 42	★
I7	IECEx intrinsically safe	32, 61	★
IY	IECEx intrinsically safe for zone 2	32, 42	★
I4	TIIS intrinsically safe	32	★
I3	China intrinsically safety	32	★
N5	FM division 2, Non-incendive	32, 42	★
N6	CSA division 2, Non-incendive	32, 42	★
NA	No approval	32, 42, 61	★

Wireless options

Wireless update rate, operating frequency and protocol		
WA3	User configurable update rate, 2.4 GHz DSSS, IEC 62591 (*Wireless*HART)	★

Table 1. Rosemount 702 Wireless Discrete Transmitter Ordering Information

★ **The Standard offering represents the most common options. The starred options (★) should be selected for best delivery. The Expanded offering is subject to additional delivery lead time.**

Omni-directional wireless antenna and SmartPower solutions[2]		
WK1	External antenna, adapter for black power module (I.S. Power module sold separately)	★
WM1	Extended range, external antenna, adapter for black power module (I.S. Power module sold separately)	★
WJ1	Remote antenna, adapter for black power module (I.S. Power module sold separately)	
WN1[3]	High-gain, remote antenna, adapter for black power module (I.S. Power module sold separately)	

Other options (include with selected model number)

Extended product warranty		
WR3	3-year limited warranty	★
WR5	5-year limited warranty	★
Display[1]		
M5	LCD display	★
Mounting bracket		
B4	Universal L mounting bracket for two inch pipe mounting - SST bracket and bolts	★
Configuration		
C1	Factory configure date, Descriptor, Message fields, and Wireless parameters	★
Cable gland		
G2	Cable gland (7.5 mm to 11.9 mm)	★
G4[4]	Thin wire cable gland (3 mm to 8 mm)	★
Switches and kits		
SS01	Universal safety shower/eyewash kit with UL switches	★
SS02	Universal safety shower/eyewash kit for insulated pipe with UL switches	★
SS03	Universal safety shower/eyewash kit with CSA switches	★
SS04	Universal safety shower/eyewash kit for insulated pipe with CSA switches	★
Typical model number: 702 D X 22 D 1 NA WA3 WK1 M5		

1. LCD Display not available for option code 61.
2. Black power module must be shipped separately, order Model 701PBKKF or Part number 00753-9220-0001.
3. Limited availability, consult factory for details.
4. Thin wire cable gland is preferred for measurement option 61.

Table 2. Spare Parts and Accessories

00702-9010-0001	Universal safety shower/eyewash kit with UL switches
00702-9010-0002	Universal safety shower/eyewash kit for insulated pipe with UL switches
00702-9010-0003	Universal safety shower/eyewash kit with CSA switches
00702-9010-0004	Universal safety shower/eyewash kit for insulated pipe with CSA switches

Specifications

Functional specifications

Discrete input

Single or dual SPST dry contacts, single SPDT dry contacts or leak detection. To maintain I.S. ratings, contacts must be limited to simple switches or leak detection only.

Switching threshold, measurement option code 32 and 42

Open > 100 K Ohm
Closed < 5 K Ohm

Momentary discrete input, measurement option code 32 and 42

Detects momentary discrete inputs of 10 millisecond or more duration. At each wireless update, device reports current discrete state and accumulating count of close-open cycles. Accumulating count registers from 0 to 999,999, then re-sets to zero.

Discrete output, measurement option Code 42

Maximum rating: 26 Vdc, 100 mA
On resistance: typical 1 Ohm

Wireless output

IEC 62591 (*Wireless*HART) 2.4 GHz DSSS

Radio frequency power output from antenna

External (WK option) antenna:
Maximum of 10 mW (10 dBm) EIRP

Extended range, external (WM option) antenna:
Maximum of 18 mW (12.5 dBm) EIRP

Remote (WJ option) antenna:
Maximum of 17 mW (12.3 dBm) EIRP

High-gain, remote (WN option) antenna:
Maximum of 40 mW (16 dBm) EIRP

Local display[1]

The optional integral LCD display can show discrete state and diagnostic information. Display updates at each wireless update.

1. The option for a local display is not available with option 61, Liquid hydrocarbon leak detection.

Humidity limits

0–100% relative humidity

Wireless update rate, measurement option code 32, 42

User selectable, 1 sec. to 60 min.

Wireless update rate, measurement option code 61

User selectable, 4 sec. to 60 min.

Physical specifications

Material selection

Emerson provides a variety of Rosemount products with various product options and configurations including materials of construction that can be expected to perform well in a wide range of applications. The Rosemount product information presented is intended as a guide for the purchaser to make an appropriate selection for the application. It is the purchaser's sole responsibility to make a careful analysis of all process parameters (such as all chemical components, temperature, pressure, flow rate, abrasives, contaminants, etc.), when specifying product materials, options, and components for the particular application. Emerson Process Management is not in a position to evaluate or guarantee the compatibility of the process fluid or other process parameters with the product options, configuration, or materials of construction selected.

Electrical connections

Wireless power module

Replaceable, Intrinsically Safe Lithium-Thionyl Chloride power module with PBT polymer enclosure. Ten year life at one minute update rate.[1]

1. Reference conditions are 70 °F (21 °C), and routing data for three additional network devices.

Note
Continuous exposure to ambient temperature limits -40 °F or 185 °F (-40 °C or 85 °C) may reduce specified power module life by less than 20 percent.

Switch terminals

Screw terminals permanently fixed to terminal block

Field Communicator connections

Communication Terminals

Clips permanently fixed to terminal block

Materials of construction

Enclosure

Housing: low-copper aluminum, or stainless steel
Paint: Polyurethane
Cover O-ring: Buna-N

Terminal Block and Power Module Pack

PBT

Antenna

PBT/PC integrated omni-directional antenna

Conduit entries

1/2–14 NPT

Weight

Low-copper aluminum:
702 without LCD - 4.6 lb (2.0 kg)
702 with M5 LCD - 4.7 lb (2.1 kg)

Stainless steel:
702 without LCD display - 8.0 lb (3.6 kg)
702 with M5 LCD display - 8.1 lb (3.7 kg

Enclosure ratings

NEMA® 4X and IP66/67

Mounting

Transmitters may be attached directly to switch, brackets also permit remote mounting. See "Dimensional Drawings" on page 17.

Performance specifications

Electromagnetic compatibility (EMC)

Meets all industrial environment requirements of EN61326 and NAMUR NE-21. Maximum deviation <1% span during EMC disturbance.(1)

Vibration effect

Wireless output unaffected when tested per the requirements of IEC60770-1 field or pipeline with high vibration level (10–60 Hz 0.21mm displacement peak amplitude/60–2000 Hz 3g).

Wireless output unaffected when tested per the requirements of IEC60770-1 field with general application or pipeline with low vibration level (10–60 Hz 0.15mm displacement peak amplitude/60–500 Hz 2g).

Temperature limits

Description	Operating limit	Storage limit
Without LCD display	-40 to 185 °F -40 to 85 °C	-40 to 185 °F -40 to 85 °C
With LCD display	-4 to 175 °F -20 to 80 °C	-40 to 185 °F -40 to 85 °C

Dry contact switch inputs, measurement option code 32, and 42

Terminal block connections

The Rosemount 702 has a pair of screw terminals for each of two channels, and a pair of communication terminals. These terminals are labeled as follows:

CH1+: Channel one positive
CMN: Common
CH2+: Channel two positive
CMN: Common
COMM: Communication terminals

Figure 1. Terminal Block Connections

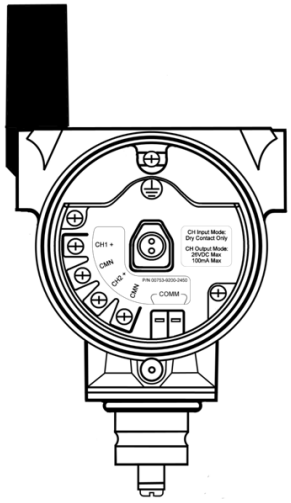

1. *During surge event device may exceed maximum EMC deviation limit or reset; however, device will self-recover and return to normal operation within specified start-up time.*

Wireless output specifications

Dry contact switch inputs, measurement option code 32, and 42

Single input or dual input independent

The Rosemount 702 will accept the input from one or two single pole single throw switches on inputs CH1 and CH2. The wireless output of the transmitter will be both a primary variable (PV) and a secondary variable (SV). The PV is determined by the CH1 input. The SV is determined by the CH2 input. A closed switch drives a TRUE output. An Open switch drives a FALSE output.

Note

Any dry contact input can be inverted by the device, so as to give the opposite effect. This is useful, for instance, if a normally open switch is used to replace a normally closed switch.

Figure 2. Single and Dual Input

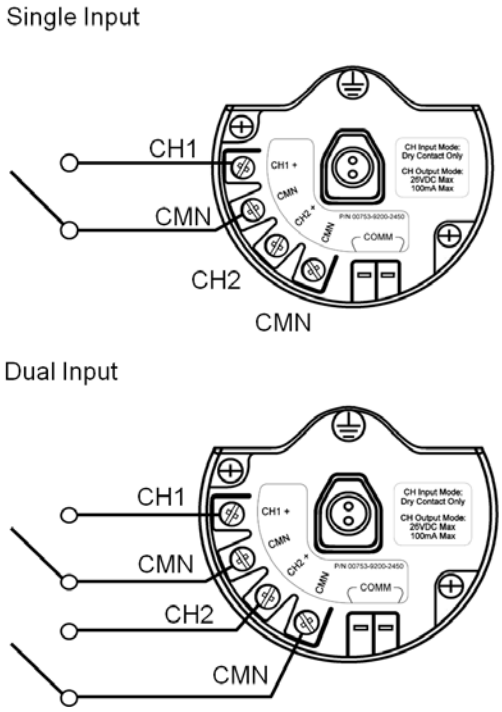

Table 3. Single or Dual Input, No Logic

Switch input	Wireless output	Switch input	Wireless output
CH1	**PV**	**CH2**	**SV**
Closed	TRUE (1.0)	Closed	TRUE (1.0)
Open	FALSE (0.0)	Open	FALSE (0.0)

Dual input, limit contact logic

When configured for Limit Contact Logic, the Rosemount 702 will accept the input from two single pole single throw switches on inputs CH1 and CH2, and will use limit contact logic for the determination of the wireless outputs.

Figure 3. Dual Input, Limit Contacts

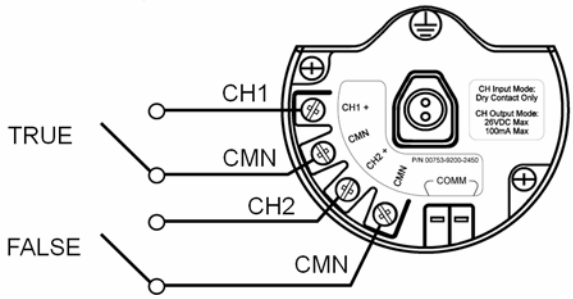

Table 4. Dual Input, Limit Contact Logic

Switch inputs		Wireless outputs	
CH1	**CH2**	**PV**	**SV**
Open	Open	TRAVEL (0.5)	TRAVEL (0.5)
Open	Closed	FALSE (0.0)	FALSE (0.0)
Closed	Open	TRUE (1.0)	TRUE (1.0)
Closed	Closed	FAULT(NaN)	FAULT(NaN)

Dual input, opposing contact logic

When configured for opposing contact logic, the Rosemount 702 will accept the input from a double pole single throw switch on inputs CH1 and CH2, and will use opposing contact logic for the determination of the wireless outputs.

Figure 4. Dual Input, Opposing Contact

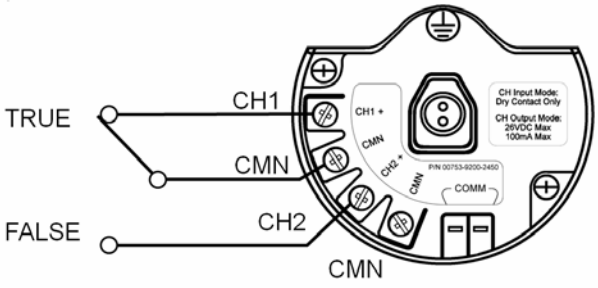

Table 5. Dual Input, Opposing Contact Logic

Switch inputs		Wireless outputs	
CH1	**CH2**	**PV**	**SV**
Open	Open	FAULT(NaN)	FAULT(NaN)
Open	Closed	FALSE (0.0)	FALSE (0.0)
Closed	Open	TRUE (1.0)	TRUE (1.0)
Closed	Closed	FAULT(NaN)	FAULT(NaN)

Momentary discrete inputs, measurement option code 32 and 42

The Rosemount 702 is capable of detecting momentary discrete inputs of 10 millisecond or more in duration, regardless of the wireless update rate. At each wireless update, the device reports current discrete state along with an accumulating count of close-open cycles for each input channel.

Figure 5. Momentary Inputs and Accumulating Count

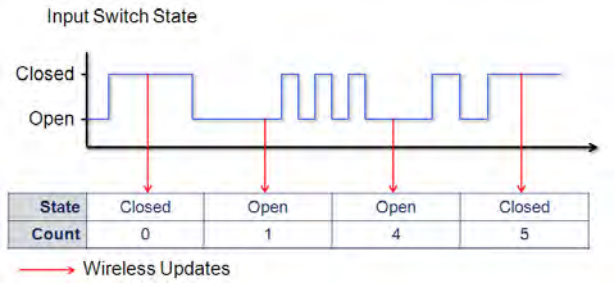

Figure 6. Reporting of Current Discrete State and Count in AMS™ Device Manager



Variable reporting and mapping

The Rosemount 702 will report variables exactly like the previous version of the device (measurement option code 22). In the Enhanced variable reporting mode, the transmitter will provide both current state of the discrete channels, and a count of the discrete state change cycles. Following is a table that shows the variable mapping for both cases. Variable Reporting can be set in AMS Device Manager by going to **Configure** > **Manual Setup** > **HART**.

Table 6. Variable Mapping

Variable reporting	Variable mapping			
	PV	**SV**	**TV**	**QV**
Enhanced – Discrete state with count	CH1 state	CH2 state	CH1 count	CH2 count

Discrete output circuits, measurement option code 42

The Rosemount 702 has two channels that can each be configured for discrete input or output. Inputs must be dry contact switch inputs and these were described in a preceding section of this document. Outputs are a simple switch closure to activate an output circuit. The transmitter output does not provide any voltage or current, the output circuit must have power of its own. The transmitter output has maximum switch capacity per channel of 26 volts DC and 100 milliamps. A typical power supply for powering an output circuit can be 24 volts or lower.

Note

It is very important that the polarity of the output circuit is as shown in the wiring diagrams, with the positive (+) side of the circuit wired to the CH1+ or the CH2 + terminal, and the negative (-) side of the circuit wired to the CMN terminal. If the output circuit is wired backwards, it will remain active (switch closed) regardless of the state of the output channel.

Discrete output switch functionality

The discrete output of the Rosemount 702 is driven by the host control system, through the Smart Wireless Gateway, and out to the transmitter. The time required for this wireless communication from the Gateway to the transmitter is dependent on many factors, including the size and topology of the network and the total amount of downstream traffic on the wireless network. For a network that is constructed to our best practices, typical delays in communication of a discrete output from the Gateway to the Transmitter are 15 seconds or less. Remember that this delay is only part of the latency that well be observed in a control loop.

Note

The output switch functionality of the Rosemount 702 requires that the network is managed by a version 3 Smart Wireless Gateway with v3.9.7 firmware, or a version 4 Gateway with v4.3 or higher firmware installed.

Figure 7. Output Circuit Wiring

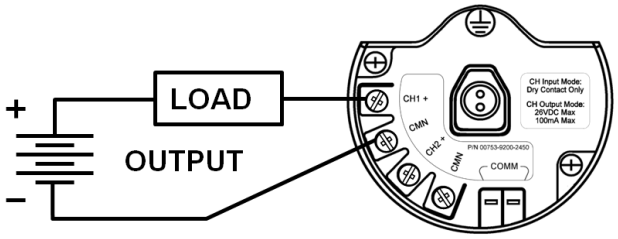

Figure 8. Possible Configurations for Both Channel 1 and Channel 2

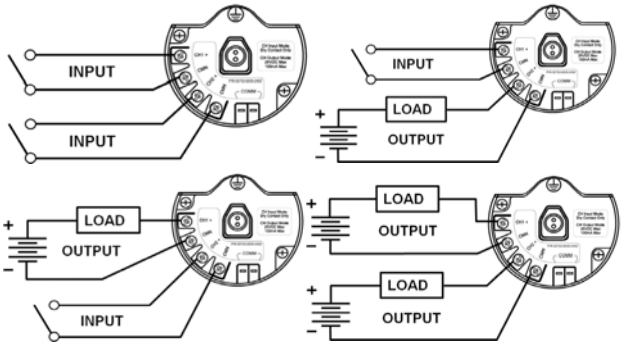

Special considerations for dual output circuits

If both channels are connected to output circuits, it is very important that the CMN terminal of each circuit be at the same voltage. Employing a common ground for both output circuits is one way to ensure that both circuits have CMN terminals at the same voltage.

Figure 9. Dual Output Circuits with a Common Ground

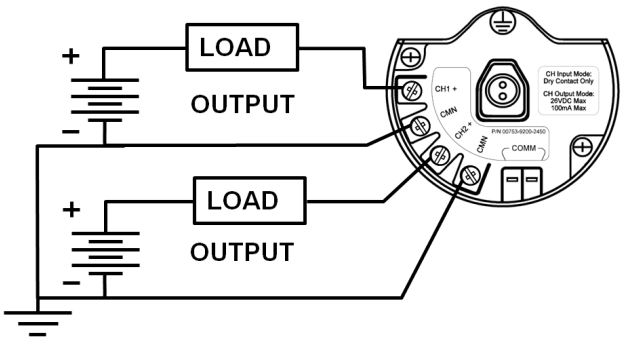

If two output circuits are connected to a single Rosemount 702 Transmitter with a single power supply, both CH + and CMN terminals must be connected to each output circuit. The negative power supply wires must be at the same voltage and connected to both CMN terminals.

Figure 10. Dual Output Circuits with One Power Supply

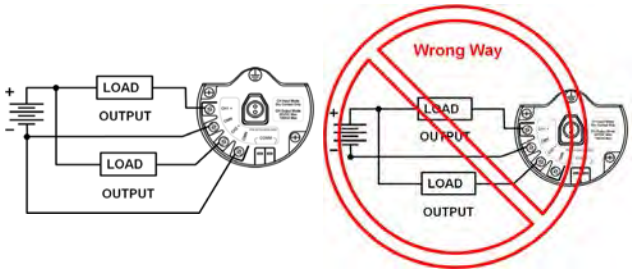

Switching greater currents or voltages

It is important to note that the maximum output switching capacity is 26 volts DC and 100 milliamps. If a greater voltage or current is to be switched, an interposing relay circuit can be used. Figure 11 shows an example of a circuit to switch higher currents or voltages.

Figure 11. Wiring an Interposing Relay to Switch Greater Currents or Voltages

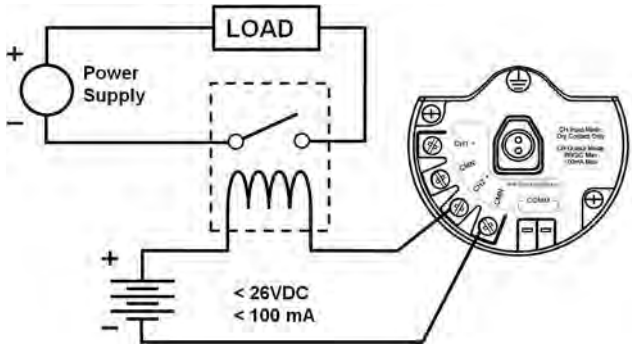

Leak sensors, liquid hydrocarbon detection, measurement option code 61

Terminal block connections

The liquid hydrocarbon detection configuration is intended for use with the Pentair TraceTek Fast Fuel Sensor, or TraceTek sensing cable.

Figure 12. Fuel Sensor Terminal Diagram

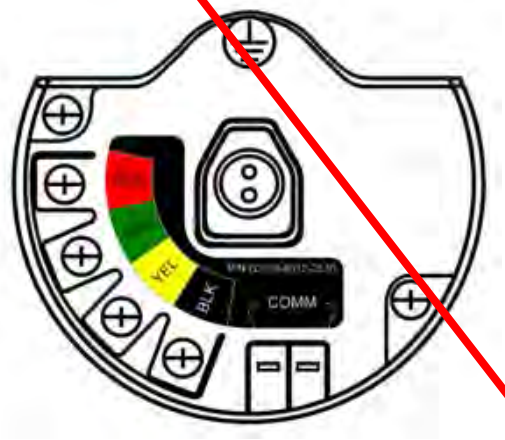

Figure 13. Fuel Sensor Connection Diagram

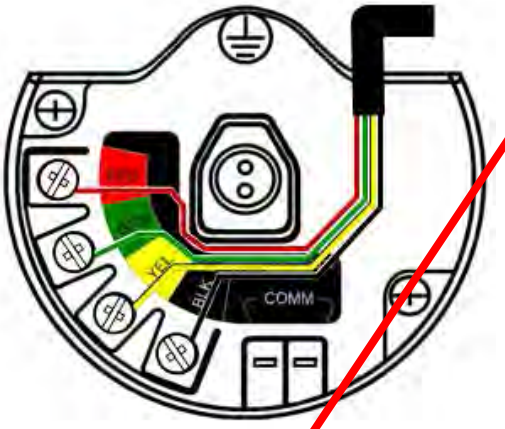

The connections to the Fast Fuel Sensor TraceTek sensing cable are made by matching the appropriately colored wires to the matching colored termination lugs.

- The Rosemount 702 can support up to three Fast Fuel sensors. These Fast Fuel sensors are connected using TraceTek Modular Leader Cable (TT-MLC-MC-BLK), optional modular jumper cables (TT-MJC-xx-MC-BLK) and branching connectors (TT-ZBC-MC-BLK) as suggested in Figure 14.

Figure 14. Fuel Sensor Wiring

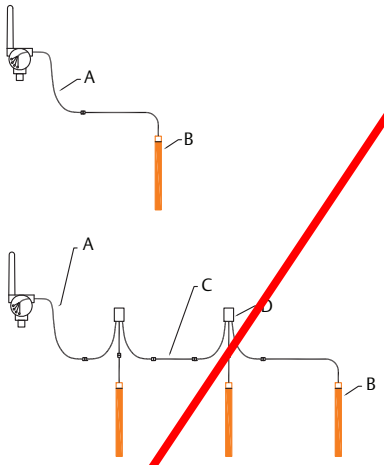

A. TT-MLC-MC-BLK (Leader cable)
B. TT-FFS-100 or TT-FFS-250 (Fast fuel sensor probe)
C. TT-MJC-xx-MC-BLK (Optional jumper cable)
D. TT-ZBC-xx-MC-BLK (Branch connector)

- The Rosemount 702 can support up to 500 ft of TraceTek hydrocarbon or solvent sensor cable (TT5000 or TT5001 series). The total amount of sensor cable connected to a single transmitter is not to exceed 500 ft. However, leader cable, jumper cables (if used), and branch connectors are not included in the 500 ft (150 m) limit. See Figure 15 for typical configurations.

Figure 15. Fuel Sensor Cable Wiring

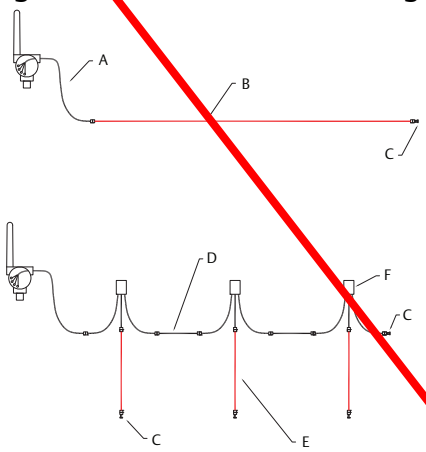

A. TT-MLC-MC-BLK (Leader cable)
B. TT5000/TT5000 Sensor cable (up to 500 ft)
C. TT-MET-MC (End termination)
D. TT-MJC-xx-MC-BLK (Optional jumper cable)
E. Up to 500 ft TT5000 or TT5001 sensor cable (Total per Rosemount 702)
F. TT-ZBC-xx-MC-BLK (Branch connector)

Safety Shower and Eye Wash Monitoring

The Rosemount 702 Transmitter can be used to monitor safety showers and eye wash stations by using switch kits provided by TopWorx™, an Emerson company. These kits are ordered as a part of the Rosemount 702 model code and are available for both insulated and un-insulated pipes. These kits contain the switches, brackets and cables that are necessary to install the transmitter to monitor both the safety shower and the eye wash in a single station. Because each has two input channels, one transmitter can be used to monitor both a safety shower and an eye wash.

Each safety shower monitoring kit contains:

- Two TopWorx GO™ Switch magnetic proximity switches
- Two cables, six-foot and 12-foot
- Two black polymer cable glands
- Mounting kit for safety shower and eye wash

UL and CSA switches

Safety shower and eye wash monitoring kits are available with either UL or CSA switches. This designation refers to the ordinary location certification of the GO Switch in the kit. These are not hazardous locations certificates. The Go Switch is regarded as a simple apparatus and does not require its own hazardous locations certificate. Either GO Switch is suitable for installation in hazardous locations when wired to the Rosemount 702 with an appropriate hazardous locations certificate. The CSA GO Switch is for applications in Canada, the UL GO Switch is for applications in all other world areas.

Installation drawings and instructions

Installation drawings and instructions for safety shower and eye wash kits are included in the Rosemount 702 Transmitter Reference Manual, Appendix D (document number 00809-0200-4702). This manual can be downloaded at the Rosemount 702 Transmitter product page: EmersonProcess.com/Rosemount-702-Discrete.

Safety shower monitoring

When the shower valve is activated (valve open) by pulling down on the handle, the TopWorx switch is activated (closed switch) and the Rosemount 702 senses that switch closure. This switch state is then transmitted by the transmitter to the Gateway, which then sends that information to the control host or alert system. When the shower valve is closed, the switch remains in the activated state until it is reset by a technician. The switch can be re-set only by placing a ferrous metal object on the far side of the sensing area of the switch.

Figure 16. TopWorx Switch Installed on Safety Shower

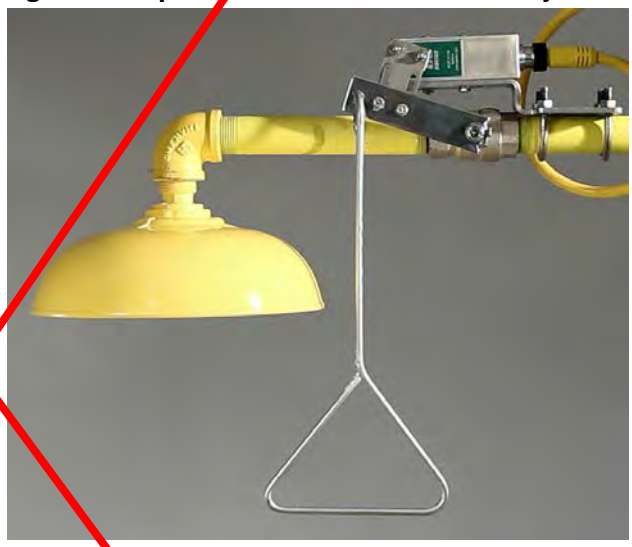

Figure 17. Detail of Switch Installation on Safety Shower

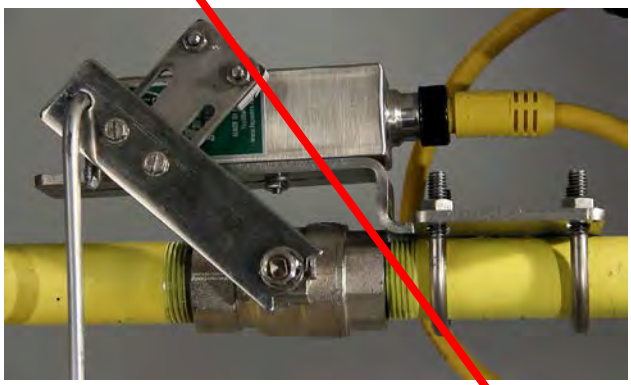

Figure 18. Safety Shower Valve in Activated Position

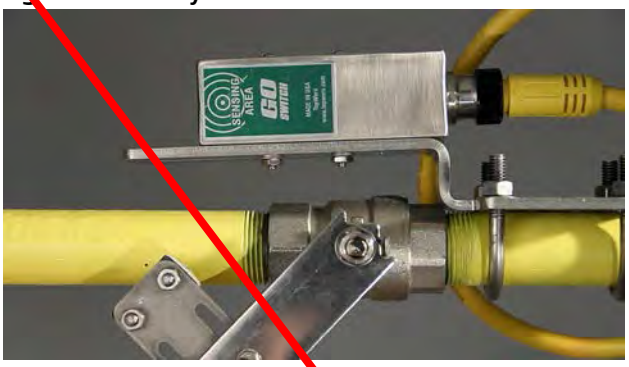

Eye wash monitoring

When the eye wash valve is activated (valve open) by pushing down on the hand paddle, the TopWorx switch is activated (closed switch) and the Rosemount 702 senses that switch closure. This switch state is then transmitted by the transmitter to the Gateway, which then sends that information to the control host or alert system. When the eye wash valve is closed, the switch remains in the activated state until it is reset by a technician. The switch can be re-set only by placing a ferrous metal object on the far side of the sensing area of the switch.

Figure 19. TopWorx Switch Installed on Eye Wash Station



Figure 20. Eye Wash in Activated Position



Product Certifications

Rev 1.0

European Union Directive Information

A copy of the EC Declaration of Conformity can be found at the end of the Quick Start Guide. The most recent revision of the EC Declaration of Conformity can be found at EmersonProcess.com/Rosemount.

Telecommunication Compliance

All wireless devices require certification to ensure that they adhere to regulations regarding the use of the RF spectrum. Nearly every country requires this type of product certification. Emerson is working with governmental agencies around the world to supply fully compliant products and remove the risk of violating country directives or laws governing wireless device usage.

FCC and IC

This device complies with Part 15 of the FCC Rules. Operation is subject to the following conditions: This device may not cause harmful interference. This device must accept any interference received, including interference that may cause undesired operation. This device must be installed to ensure a minimum antenna separation distance of 20 cm from all persons.

Ordinary Location Certification for FM Approvals

As standard, the transmitter has been examined and tested to determine that the design meets basic electrical, mechanical, and fire protection requirements by FM Approvals, a nationally recognized testing laboratory (NRTL) as accredited by the Federal Occupational Safety and Health Administration (OSHA).

Installing in North America

The US National Electrical Code® (NEC) and the Canadian Electrical Code (CEC) permit the use of Division marked equipment in Zones and Zone marked equipment in Divisions. The markings must be suitable for the area classification, gas, and temperature class. This information is clearly defined in the respective codes.

USA

I5 FM Intrinsic Safety (IS) and Nonincendive (NI)
Certificate: 3031506
Standards: FM Class 3600 – 1998, FM Class 3610 – 2010, FM Class 3611 – 2004, FM Class 3810 – 2005, ANSI/NEMA 250 - 2003
Markings: IS CL I, DIV 1, GP 1, A, B, C, D; CL II, DIV 1, GP E, F, G; Class III; Class 1, Zone 0 AEx ia IIC T4; NI CL I, DIV 2, GP A, B, C, D T4;
T4(-50 °C ≤ T_a ≤ +70 °C) when installed per Rosemount drawing 00702-1000; Type 4X; IP66;

Special Conditions for Safe Use (X):

1. The 702 transmitter housing contains aluminum and is considered a potential risk of ignition by impact or friction. Care must be taken into account during installation and use to prevent impact and friction.
2. The surface resistivity of the polymeric antenna is greater than 1 GΩ. To avoid electrostatic charge build-up, it must not be rubbed or cleaned with solvents or a dry cloth.
3. For use only with the Model 701P or Rosemount 753-9220-XXXX Smart Power Battery Module.

Sensor terminal parameters (option code 32)	Fuel sensor terminal parameters (option code 61)
U_o = 6.51 V	U_o = 7.8 V
I_o = 13.37 mA	I_o = 92 mA
P_o = 21.76 mW	P_o = 180 mW
C_o = 21.77 uF	C_o = 9.2 uF
L_o = 198 mH	L_o = 50 mH

N5 FM Nonincendive
Certificate: 3031506
Standards: FM Class 3600 – 1998, FM Class 3611 – 2004, FM Class 3810 – 2005, ANSI/NEMA 250 – 2003
Markings: NI CL I, DIV 2, GP A, B, C, D T4;
T4(-50 °C ≤ T_a ≤ +70 °C) when installed per Rosemount drawing 00702-1000;
Type 4X; IP66;

Special Condition for Safe Use (X):

1. For use only with the Model 701P or Rosemount P/N 753-9220-XXXX SmartPower Battery Module.

Canada

I6 CSA Intrinsically Safe
Certificate: 1143113
Standards: CAN/CSA Std. 22.2 No. 0-10, CSA Std. 22.2 No. 142-M1987, CAN/CSA Std. 22.2 No. 157-92, CSA Std. 22.2 No. 60529:05
Markings: Intrinsically Safe Class I, Division 1; suitable for Class 1, Zone 0, IIC, T3C; when connected per Rosemount drawing 00702-1020; Type 4X

N6 CSA Class I Division 2
Certificate: 1143113
Standards: CAN/CSA C22.2 No. 0-10, CAN/CSA C22.2 No. 94-M91, CSA Std C22.2 No. 142-M1987, CSA Std C22.2 No. 60529:05
Markings: Suitable for Class 1, Division 2, Groups A, B, C, and D, T3C; Cl. I, Zone 2, IIC, T3C;

Europe

I1 ATEX Intrinsic Safety
Certificate: Baseefa 07ATEX0239X
Standards: IEC 60079-0: 2011, EN60079-11: 2012
Markings: Ⓔx II 1 G Ex ia IIC T4 Ga, T4(-60 °C ≤ T_a ≤ +70 °C)
Ex ia IIC T5 Ga, T5(-60 °C ≤ T_a ≤ +40 °C)
For use with Rosemount SmartPower power module part number 753-9220-0001, or for use with Emerson SmartPower option 701PBKKF.

Sensor terminal parameters (option code 32)	Fuel sensor terminal parameters (option code 61)
U_o = 6.51 V	U_o = 7.8 V
I_o = 13.37 mA	I_o = 92 mA
P_o = 21.76 mW	P_o = 180 mW
C_i = 0.216 uF	C_i = 10 nF
C_{OIIC} = 21.78 uF	C_{OIIC} = 9.2 uF
C_{OIIB} = 549.78 uF	C_{OIIB} = 129 uF
C_{OIIA} = 1000 uF	C_{OIIA} = 1000 uF
L_i = 0	L_i = 0
L_{OIIC} = 200 mH	L_{OIIC} = 4.2 mH
L_{OIIB} = 800 mH	L_{OIIB} = 16.8 mH
L_{OIIA} = 1000 mH	L_{OIIA} = 33.6 mH

Special Condition for Safe Use (X):

1. The surface resistivity of the antenna is greater than 1GΩ. To avoid electrostatic change build-up, it must not be rubbed or cleaned with solvents or a dry cloth.

IU ATEX Intrinsic Safety for Zone 2
Certificate: Baseefa12ATEX0122X
Standards: IEC 60079-0: 2011, EN60079-11: 2012
Markings: Ⓔx II 3G Ex ic IIC T4 Gc, T4(-60 °C ≤ T_a ≤ +70 °C)
Ex ic IIC T5 Gc, T5(-60 °C ≤ T_a ≤ +40 °C)

Sensor terminal parameters (input)	Switch terminal parameters (output)
U_o = 6.6 V	U_i = 26V
I_o = 13.4 mA	I_i = 100mA
P_o = 21.8 mW	P_i = 0.65W
C_o = 10.9 uF	N/A
L_o = 25 uF	N/A

Special Conditions for Safe Use (X):

1. The surface resistivity of the antenna is greater than 1 GΩ. To avoid electrostatic charge build-up, it must not be rubbed or cleaned with solvents or a dry cloth.
2. The Model 701PB Power Module may be replaced in a hazardous area. The Power Module has surface resistivity greater than 1 GΩ and must be properly installed in the wireless device enclosure. Care must be taken during transportation to and from the point of installation to prevent electrostatic charge build-up.

International

I7 IECEx Intrinsic Safety
Certificate: IECEx BAS 07.0082X
Standards: IEC 60079-0: 2011, IEC 60079-11: 2011
Markings: Ex ia IIC T4 Ga, T4 (-40 °C ≤ T_a ≤ +70 °C)
Ex ia IIC T5 Ga, T5 (-40 °C ≤ T_a ≤ +40 °C)

Switch terminal parameters (option code 32)	Fuel sensor terminal parameters (option code 61)
U_o = 6.51 V	U_o = 7.8 V
I_o = 13.37 mA	I_o = 92 mA
P_o = 21.76 mW	P_o = 180 mW
C_i = 0.216 uF	C_i = 10 nF
C_{OIIC} = 21.78 uF	C_{OIIC} = 9.2 uF
C_{OIIB} = 549.78 uF	C_{OIIB} = 129 uF
C_{OIIA} = 1000 uF	C_{OIIA}= 1000 uF
L_i = 0	L_i = 0
L_{OIIC}= 200 mH	L_{OIIC} = 4.2 mH
L_{OIIB} = 800 mH	L_{OIIB} = 16.8 mH
L_{OIIA} = 1000 mH	L_{OIIA} = 33.6 mH

Special Conditions for Safe Use (X):

1. The surface resistivity of the antenna is greater than 1 GΩ. To avoid electrostatic charge build-up, it must not be rubbed or cleaned with solvents or a dry cloth.
2. The Model 701PB Power Module may be replaced in a hazardous area. The Power Module has surface resistivity greater than 1 GΩ and must be properly installed in the wireless device enclosure. Care must be taken during transportation to and from the point of installation to prevent electrostatic charge build-up.
3. The 702 enclosure may be made of aluminum alloy and given a protective polyurethane paint finish; however, care should be taken to protect it from impact or abrasion if located in a Zone 0 area.

IY IECEx Intrinsic Safety for Zone 2
Certificate: IECEx BAS 12.0082X
Standards: IEC 60079-0: 2011, IEC 60079-11: 2011
Markings: Ex ic IIC T4 Gc, T4 (-40 °C ≤ T_a ≤ +70 °C)
Ex ic IIC T5 Gc, T5 (-40 °C ≤ T_a ≤ +40 °C)

Sensor terminal parameters (input)	Switch terminal parameters (output)
U_o = 6.6 V	U_i = 26 V
I_o = 13.4 mA	I_i = 100 mA
P_o = 21.8 mW	P_i = 0.65 W
C_o = 10.9 uF	N/A
L_o = 25 uF	N/A

Special Conditions for Safe Use:

1. The surface resistivity of the antenna is greater than 1 GΩ. To avoid electrostatic charge build-up, it must not be rubbed or cleaned with solvents or a dry cloth.
2. The Model 701PB Power Module may be replaced in a hazardous area. The Power Module has surface resistivity greater than 1 GΩ and must be properly installed in the wireless device enclosure. Care must be taken during transportation to and from the point of installation to prevent electrostatic charge build-up.
3. The 702 enclosure may be made of aluminum alloy and given a protective polyurethane paint finish; however, care should be taken to protect it from impact or abrasion if located in a Zone 0 area.

China

I3 China Intrinsic Safety
Certificate: GYJ13.1238X
Standards: GB3836.1-2010, GB3836.4-2010, GB3836.20-2010
Markings: (option 32, 61): Ex ia IIC T4/T5 Ga, T4(-60 °C ≤ T_a ≤ +70 °C)/T5(-60 °C ≤ T_a ≤ +40 °C)
(option 32, 42): Ex ic IIC T4/T5 Gc, T4(-60 °C ≤ T_a ≤ +70 °C)/T5(-60 °C ≤ T_a ≤ +40 °C)

Switch terminal parameters (option code 32)	Terminal parameters (option code 42)		Fuel sensor terminal parameters (option code 61)
	Sensor	Switch	
U_o = 6.6 V	U_o = 6.6 V	U_i = 26 V	U_o = 7.8 V
I_o = 13.4 mA	I_o = 13.4 mA	I_i = 100 mA	I_o = 92 mA
P_o = 21.8 mW	P_o = 21.8 mW	P_i = 650 mW	P_o = 180 mW
C_{OIIC} = 21.78 uF	C_o = 21.78 uF	L_i=0	C_o = 9.29 uF
C_{OIIB} = 499.78 uF	N/A	N/A	N/A
C_{OIIA} = 1000 uF	N/A	N/A	N/A
L_{OIIC} = 200 mH	L_o = 0.025 mH	N/A	L_o=2 mH
L_{OIIB} = 800 mH	N/A	N/A	N/A
L_{OIIA}= 1000 mH	N/A	N/A	N/A

Special Condition for Safe Use (X):

1. See certificate for special conditions.

Japan

I4 TIIS Intrinsic Safety
Certificates: TC20411 (Option 32)
TC20412 (Option 61)
Markings: Ex ia IIC T4 (-20 °C ≤ T_a ≤ +60 °C)

EAC - Belarus, Kazakhstan, Russia

IM EAC Intrinsic Safety
Certificate: RU C-US.Gb05.B.00578
Markings: (option 32, 61): 0Ex ia IIC T4/T5 X,
(option 32, 42): 2Ex ic IIC T4/T5 X,
T4 (-60 °C ≤ T_a ≤ +70 °C)/T5(-60 °C ≤ T_a ≤ +40 °C)

Switch terminal parameters (option code 32)	Terminal parameters (option code 42)		Fuel sensor terminal parameters (option code 61)
	Sensor	Switch	
U_o = 6.6 B	U_o = 6.6 B	U_i B = 26 B	U_o = 7.8 B
I_o = 13.4 mA	I_o = 13.4 mA	I_i = mA = 100 mA	I_o = 92 mA
P_o = 21.8 mB_T	P_o = 21.8 mB_T	P_i, B_T= 650 mB_T	P_o = 180 mB_T
C_i = 216 HΦ	C_i = 216 HΦ	N/A	C_i = 10HΦ
C_{OIIC} = 23.78MKΦ	C_{OIIC}= 23.78MKΦ	N/A	N/A
C_{OIIB} = 549.78MKΦ	C_{OIIB}= 549.78MKΦ	N/A	N/A
C_{OIIA} = 1000MKΦ	C_{OIIA}= 1000MKΦ	N/A	N/A
L_i = 0	L_i = 0	L_i = 0	L_i = 0
L_{OIIC} = 200MΓ H	L_{OIIC} = 200MΓ H	N/A	N/A
L_{OIIB} = 800MΓ H	L_{OIIB} = 800MΓ H	N/A	N/A
L_{OIIA} = 1000MΓ H	L_{OIIA} = 1000MΓ H	N/A	N/A

Special Condition for Safe Use (X):

1. See certificate for special conditions.

Combination

KQ Combination of I1, I5, and I6

Dimensional Drawings

Figure 21. Rosemount 702 Transmitter

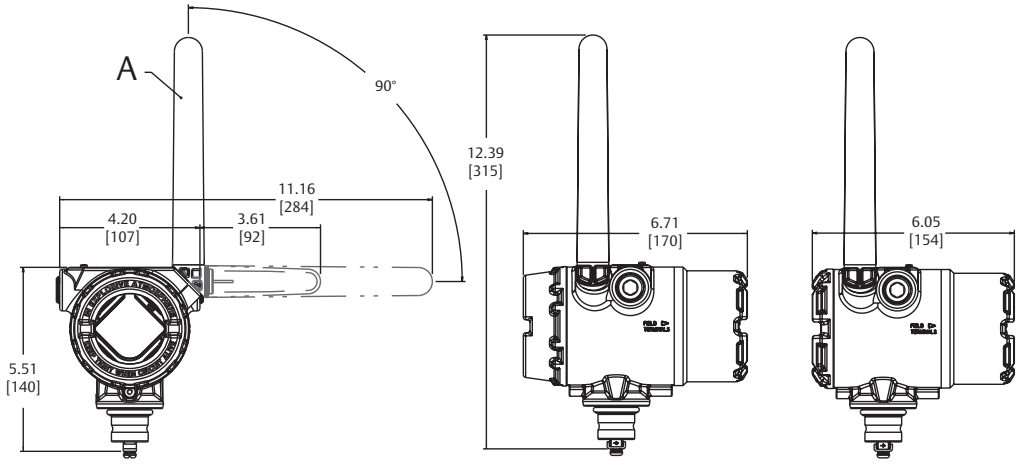

A. Extended range external antenna
Dimensions are in inches (millimeters).

Figure 22. Rosemount 702 Transmitter Mounting Configurations with Optional Mounting Bracket

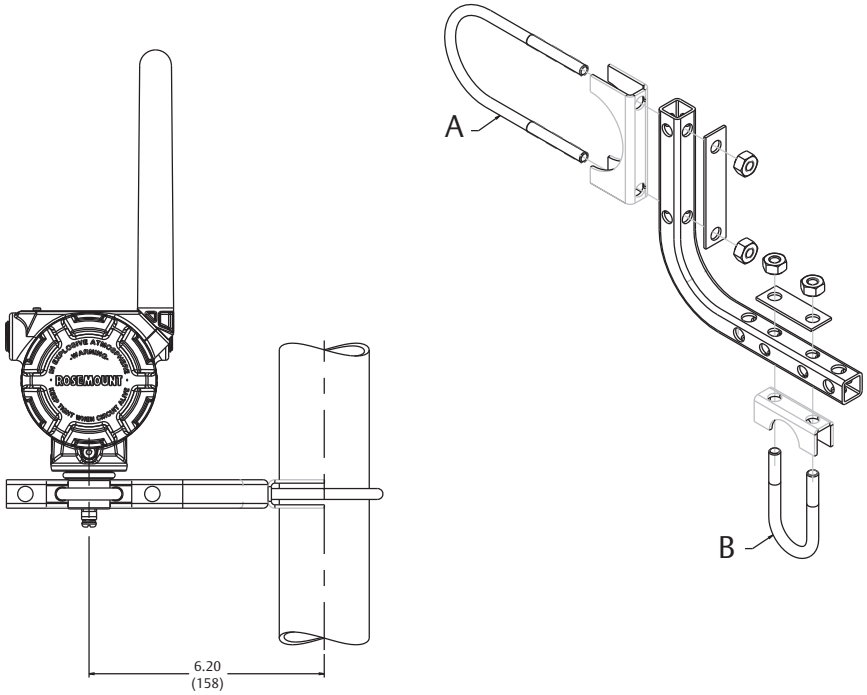

A. 2-in. U-bolt for pipe mounting
B. 1-in. U-bolt for transmitter mounting
Dimensions are in inches (millimeters).

Figure 23. Rosemount 702 Wireless Transmitter

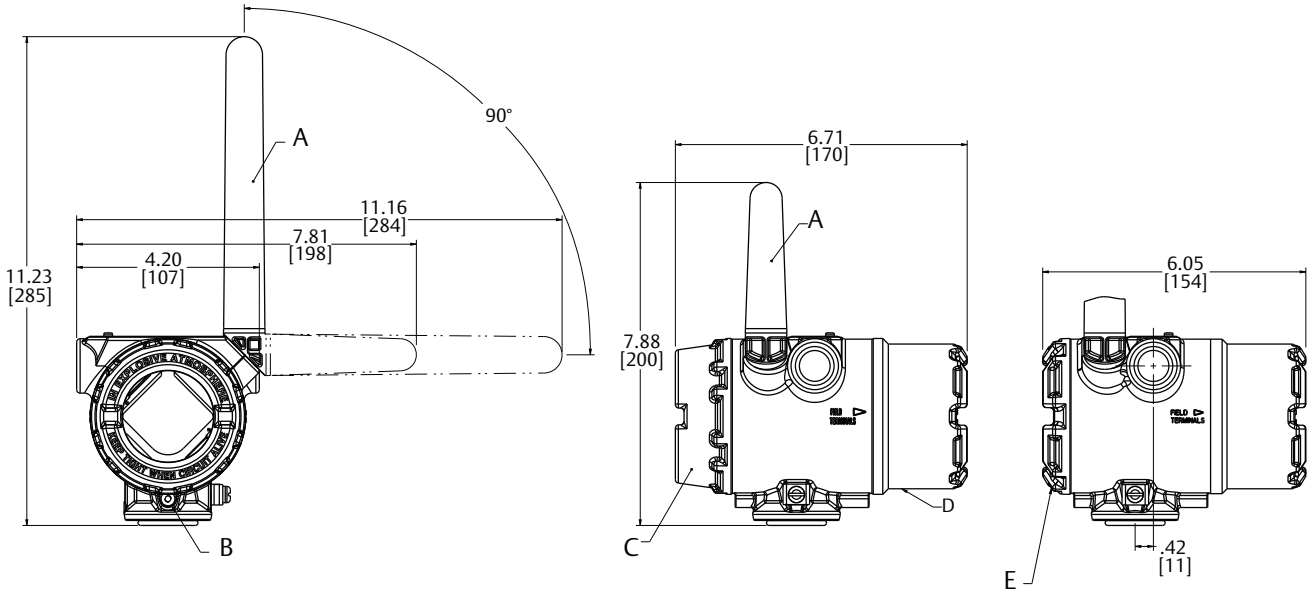

A. 2.4 GHz/*Wireless*HART extended range antenna
B. Ground screw assembly
C. Digital display cover
D. Field terminals
E. Transmitter electronics
Dimensions are in inches (millimeters).

Figure 24. Rosemount 702 Wireless Transmitter Mounting Configuration with Optional Mounting Bracket

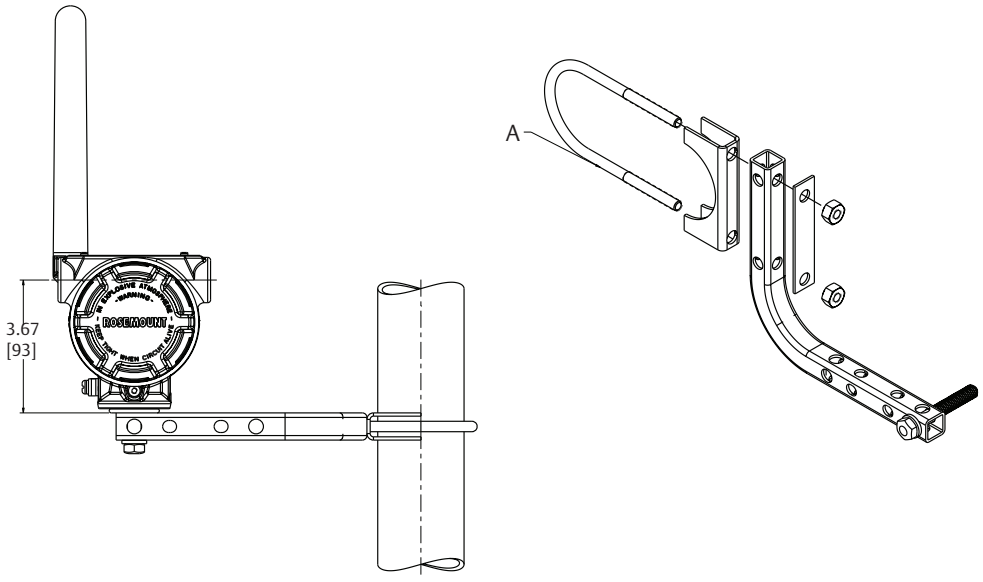

A. 2-in. U-bolt for pipe fitting
Dimensions are in inches (millimeters).

Global Headquarters
Emerson Process Management
6021 Innovation Blvd.
Shakopee, MN 55379, USA
+1 800 999 9307 or +1 952 906 8888
+1 952 949 7001
RFQ.RMD-RCC@EmersonProcess.com

North America Regional Office
Emerson Process Management
8200 Market Blvd.
Chanhassen, MN 55317, USA
+1 800 999 9307 or +1 952 906 8888
+1 952 949 7001
RMT-NA.RCCRFQ@Emerson.com

Latin America Regional Office
Emerson Process Management
1300 Concord Terrace, Suite 400
Sunrise, FL 33323, USA
+1 954 846 5030
+1 954 846 5121
RFQ.RMD-RCC@EmersonProcess.com

Europe Regional Office
Emerson Process Management Europe GmbH
Neuhofstrasse 19a P.O. Box 1046
CH 6340 Baar
Switzerland
+41 (0) 41 768 6111
+41 (0) 41 768 6300
RFQ.RMD-RCC@EmersonProcess.com

Asia Pacific Regional Office
Emerson Process Management Asia Pacific Pte Ltd
1 Pandan Crescent
Singapore 128461
+65 6777 8211
+65 6777 0947
Enquiries@AP.EmersonProcess.com

Middle East and Africa Regional Office
Emerson Process Management
Emerson FZE P.O. Box 17033,
Jebel Ali Free Zone - South 2
Dubai, United Arab Emirates
+971 4 8118100
+971 4 8865465
RFQ.RMTMEA@Emerson.com

Linkedin.com/company/Emerson-Process-Management

Twitter.com/Rosemount_News

Facebook.com/Rosemount

Youtube.com/user/RosemountMeasurement

Google.com/+RosemountMeasurement

Standard Terms and Conditions of Sale can be found at:
www.Emerson.com/en-us/pages/Terms-of-Use.aspx
The Emerson logo is a trademark and service mark of Emerson Electric Co.
AMS, SmartPower, TopWorx, GO Switch, Rosemount, and Rosemount logotype are trademarks of Emerson Process Management.
*Wireless*HART is a registered trademark of Field Comm Group.
TraceTek is a registered trademark of Tyco Thermal Controls LLC or its affiliates.
NEMA is a registered trademark and service mark of the National Electrical Manufacturers Association.
National Electrical Code is a registered trademark of National Fire Protection Association, Inc.
All other marks are the property of their respective owners.
© 2016 Emerson Process Management. All rights reserved.

Product Data Sheet
May 2016
00813-0100-4248, Rev DB

Rosemount™ 248 Wireless Temperature Transmitter



- Standard temperature transmitter offers a wireless solution for process monitoring
- Optimize plant efficiency and increase measurement reliability with industry-proven capabilities and specifications
- Emerson™ Smart Wireless delivers innovative wireless solutions for temperature measurement and overall transmitter performance
- Explore the benefits of Complete Point Solutions™ from Rosemount Temperature

EMERSON
Process Management

Rosemount 248 Wireless Temperature Transmitter

Standard temperature transmitter offers a cost effective solution for wireless process monitoring

- Single sensor capability with universal sensor inputs (RTD, T/C, mV, ohms)
- IEC-approved *Wireless*HART® protocol
- Large LCD display (only available with enclosure option code P)

Optimize plant efficiency and increase measurement reliability with industry-proven capabilities and specifications

- One-year stability rating reduces maintenance costs
- User-centric device dashboards communicate important diagnostics and ensure process health
- Open/short sensor diagnostics assist with detecting issues in the sensor loop
- Compensation for ambient temperatures enhances transmitter performance
- Four user-configurable alerts provide increased process information and measurement point insight (only available with enclosure option code P)

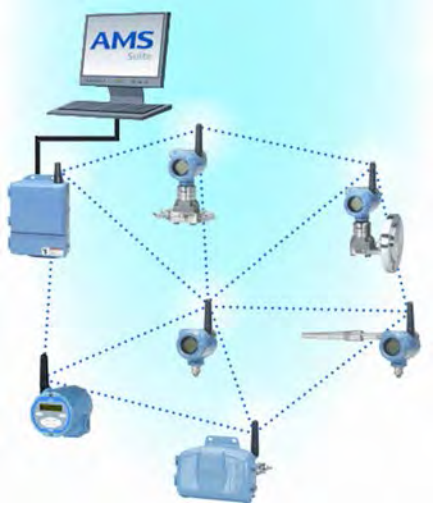

Smart Wireless delivers innovative wireless solutions for temperature measurement and overall transmitter performance

- Self-organizing network delivers information rich data with >99% data reliability and establishes a highly stable network
- Smart Wireless capabilities extend the full benefits of PlantWeb™ to previously inaccessible temperature measurement locations
- Emerson SmartPower™ solutions provide an intrinsically safe Power Module, allowing field replacements without removing the transmitter from the process, keeping personnel safe and reducing maintenance costs
- Emerson Process Management's layered approach to wireless network security ensures that data transmissions are secure

Contents

Rosemount 248 Wireless Temperature Transmitter . . . 2
Ordering Information 4
Specifications 6
Product Certifications 12
Dimensional Drawings 15

Explore the benefits of a Complete Point Solution from Rosemount Temperature Measurement



- An “Assemble To Sensor” option enables Emerson to provide a complete point temperature solution, delivering an installation-ready transmitter and sensor assembly
- Emerson offers a selection of RTDs, thermocouples, and thermowells that bring superior durability and Rosemount reliability to temperature sensing, complementing the Rosemount transmitter portfolio

Experience global consistency and local support from numerous worldwide Rosemount Temperature manufacturing sites



- World-class manufacturing provides globally consistent product from every factory and the capacity to fulfill the needs of any project, large or small
- Experienced Instrumentation Consultants help select the right product for any temperature application and advise on best installation practices
- An extensive global network of Emerson service and support personnel can be on-site when and where they are needed

- Make wireless installation and configuration easy with the **Emerson Smart Wireless Gateway**.
- For wireless applications that require superior accuracy, consider the **Rosemount 648 Wireless** Temperature Transmitter.
- Explore how Emerson's intrinsically safe **SmartPower Solutions** reduce maintenance costs.

Ordering Information



The Rosemount 248 Wireless Temperature Transmitter has a rugged wireless transmitter design and industry-proven capabilities and specifications.

Transmitter features include:

- IEC-approved *Wireless*HART protocol (option code WA3)
- Large LCD display (option code M5)
- Internal antenna (option code WP5)
- 3-point calibration certificate (option code Q4)
- Assemble to Sensor options (option code XA)

Table 1. Rosemount 248 Wireless Temperature Transmitter Ordering Information

★ The Standard offering represents the most common options. The starred options (★) should be selected for best delivery. The Expanded offering is subject to additional delivery lead time.

Code	Product description			
248	Temperature transmitter			
Transmitter type				
D	Wireless field mount			★
Transmitter output				
X	Wireless			★
Product certifications				
NA	No Approval			★
I5	USA Intrinsically Safe and Non-incendive			★
N5[1]	USA Nonincendive and Dust-Ignitionproof			★
I6	Canada Intrinsically Safe			★
I1	ATEX Intrinsic Safety			★
I7	IECEx Intrinsic Safety			★
I2[2]	INMETRO Intrinsic Safety			★
I4[2]	TIIS Intrinsic Safety			★
I3[2]	NEPSI Intrinsic Safety			★
IM	Technical Regulation Customs Union (EAC), Intrinsic Safety			★
Enclosure options		**Material**	**IP rating**	
D	Wireless housing	Aluminum	IP66/67	★
P	Wireless engineered polymer housing	Engineered Polymer	IP66/67	★
Conduit entry size				
2	1/2–14 NPT			★

Table 1. Rosemount 248 Wireless Temperature Transmitter Ordering Information

★ **The Standard offering represents the most common options. The starred options (★) should be selected for best delivery. The Expanded offering is subject to additional delivery lead time.**

Options (include with selected model number)

Assemble to options		
NS	No sensor	★
XA[3]	Sensor specified separately and assembled to transmitter	★
Wireless update rate, operating frequency, and protocol		
WA3	User configurable update rate, 2.4GHz DSSS, *Wireless*HART	★
Omnidirectional wireless antenna and SmartPower		
WP5[2][4]	Internal antenna, compatible with green power module (I.S. power module sold separately)	★
WK1[1][5]	External antenna, adapter for black power module (I.S. power module sold separately)	★
Mounting bracket		
B5	Universal “L” mounting bracket for 2-in. pipe mounting – SST bracket and bolts	★
Display[2]		
M5	LCD display	★
Cable gland option		
G2	Cable gland (7.5 mm to 11.9 mm)	★
G4	Thin wire cable gland (3 mm to 8 mm)	★
5-point calibration[1]		
C4	5-point calibration (Requires the Q4 option code to generate a calibration certificate)	★
Calibration certificate		
Q4	Calibration certificate (3-point calibration)	★
External ground[1]		
G1	External ground lug assembly	★
Line filter		
F5	50 Hz line voltage filter	★
F6	60 Hz line voltage filter	★
Software configuration		
C1	Custom configuration of date, descriptor, message, and wireless parameters (Requires CDS with order)	★
Extended product warranty		
WR3	3-year limited warranty	★
WR5	5-year limited warranty	★
Typical model number: 248 D X NA P 2 NS WA3 WP5 B5 M5 F6 WR3		

1. Only available with enclosure option code D.
2. Only available with enclosure option code P.
3. When ordering a Rosemount 248 Wireless with the XA option, a mounting bracket is not included. If a bracket is required, order option code B5.
4. Green power module must be shipped separately, order Model 701PGNKF.
5. Black power module must be shipped separately, order Model 701PBKKF.

Specifications

Functional specifications

Input

Supports Thermocouple, RTD, millivolt, and ohm input types. See "Accuracy" on page 9 for a full listing of sensor options.

Output

IEC 62591 *(Wireless*HART), 2.4 GHz DSSS

Local display[1]

The optional five digit integral LCD display can display sensor temperature in engineering units (°F, °C, °R, K, Ω, and millivolts) and percent of range. The display updates based in the wireless update rate.

Humidity limits

0–99% non-condensing relative humidity

Update rate

*Wireless*HART, user-selectable 1 second to 60 minutes

Accuracy (Pt 100 @ reference condition: 20 °C)

±0.81 °F (±0.45 °C)

Wireless radio (WP5 and WK1 options)

Frequency: 2,400–2,485 GHz
Channels: 15
Modulation: IEEE 802.15.4 compliant DSSS

Physical specifications

Material selection

Emerson provides a variety of Rosemount product with various product options and configurations including materials of construction that can be expected to perform well in a wide range of applications. The Rosemount product information presented is intended as a guide for the purchaser to make an appropriate selection for the application. It is the purchaser's sole responsibility to make a careful analysis of all process parameters (such as all chemical components, temperature, pressure, flow rate, abrasives, contaminants, etc.), when specifying product, materials, options and components for the particular application. Emerson Process Management is not in a position to evaluate or guarantee the compatibility of the process fluid or other process parameters with the product, options, configuration or materials of construction selected.

Conformance to specifications (±3σ [Sigma])

Technology leadership, advanced manufacturing techniques, and statistical process control ensure specification conformance to at least ±3σ.

Electrical connections

Power module

The Emerson SmartPower power module is field replaceable, featuring keyed connections that eliminate the risk of incorrect installation.

The power module is an Intrinsically Safe solution, containing Lithium-thionyl chloride with a polybutadine terephthalate (PBT) enclosure.

The Rosemount 248 Wireless has a power module life time rating of 10 years with a one minute update rate at reference conditions.[2]

Sensor terminals

Sensor terminals permanently fixed to terminal block

1. *Only available with enclosure option code P.*
2. *Reference conditions are 70 °F (21 °C), and routing data for three additional network devices.*

   Note: Continuous exposure to ambient temperature limits –40 °F or 185 °F (–40 °C or 85 °C) may reduce specified life by less than 20 percent.

Field Communicator connections

Communication terminals

HART® interface connections fixed to the power module (polymer housing)

Clips permanently fixed to terminal block, designated by the text “COMM” (aluminum housing)

Materials of construction

Enclosure

Housing: PBT/PC or low-copper aluminum with NEMA® 4X and IP66/67
Paint: Polyurethane (aluminum housing)
Cover O-ring: Silicone (polymer housing), Buna-N (aluminum housing)
Conduit entry: 316 SST (polymer housing)

Antenna

PBT/PC integrated omni-directional antenna (aluminum housing)

Mounting

Transmitters may be attached directly to the sensor. Mounting brackets also permit remote mounting. See “Dimensional Drawings” on page 15.

Weight

Engineered polymer

248 without LCD display: 0.99 lb (0,45 kg)
248 with LCD display: 1.11 lb (0,51 kg)

Aluminum

3.03 lb (1,38 kg)

Enclosure ratings

Type 4X and IP66/67

Performance specifications

Electromagnetic Compatibility (EMC)

Meets all relevant requirements of IEC 61326

Transmitter measurement stability

±0.15% of output reading or 0.15 °C (whichever is greater) for 12 months

Self calibration

The analog-to-digital measurement circuitry automatically self-calibrates for each temperature update by comparing the dynamic measurement to extremely stable and accurate internal reference elements.

Vibration effect

The Rosemount 248 Wireless (direct and remote mounted with enclosure option code D and direct mounted with enclosure option code P) are tested to the following specifications with no effect on performance per IEC 60770-1, 1999:

Frequency	Acceleration
10–60 Hz	0.21 mm peak displacement
60–2000 Hz	3 g

The Rosemount 248 Wireless (remote mounted with enclosure option code P) is tested to the following specifications with no effect on performance per IEC 60770-1, 1999:

Frequency	Acceleration
10–60 Hz	0.15 mm peak displacement
60–500 Hz	2 g

Sensor connections

Figure 1. Rosemount 248 Wireless Sensor Terminal Block (Polymer Housing)

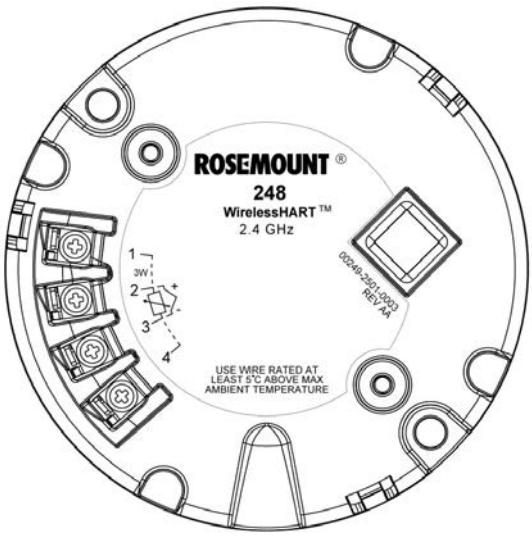

Figure 2. Rosemount 248 Wireless Sensor Terminal Block (Aluminum Housing)

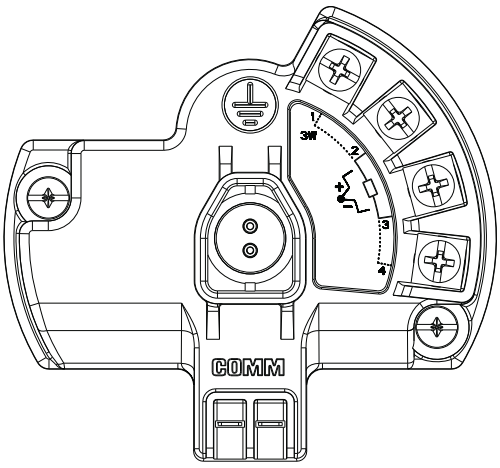

Figure 3. 248 Wireless Sensor Connection

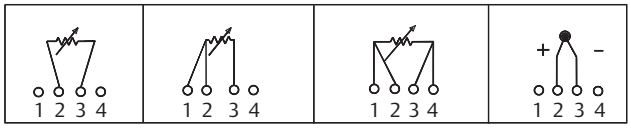

2-wire RTD and Ω(1) | 3-wire RTD and Ω(1) | 4-wire RTD and Ω | T/C and mV

1. Emerson Process Management provides 4-wire sensors for all single element RTDs. You can use these RTDs in 3-wire or 2-wire configurations by leaving the unneeded leads disconnected and insulated with electrical tape.

Temperature limits

Operating limit	Storage limit
–40 to 185 °F (–40 to 85 °C)	–40 to 185 °F (–40 to 85 °C)

Accuracy

Table 2. Rosemount 248 Wireless Input Options and Accuracy

Sensor options	Sensor reference	Input ranges		Digital accuracy[1]	
2-, 3-, 4-wire RTDs		°C	°F	°C	°F
Pt 100 (α = 0.00385)	IEC 751	–200 to 850	–328 to 1562	±0.45	±0.81
Pt 200 (α = 0.00385)	IEC 751	–200 to 850	–328 to 1562	±0.45	±0.81
Pt 500 (α = 0.00385)	IEC 751	–200 to 850	–328 to 1562	±0.57	±1.026
Pt 1000 (α = 0.00385)	IEC 751	–200 to 300	–328 to 572	±0.57	±1.026
Pt 100 (α = 0.003916)	JIS 1604	–200 to 645	–328 to 1193	±0.45	±0.81
Pt 200 (α = 0.003916)	JIS 1604	–200 to 645	–328 to 1193	±0.45	±0.81
Ni 120	Edison Curve No. 7	–70 to 300	–94 to 572	±0.45	±0.81
Cu 10	Edison Copper Winding No. 15	–50 to 250	–58 to 482	±4.16	±7.488
Pt 50 (α = 0.00391)	GOST 6651-94	–200 to 550	–328 to 990	±0.9	±1.62
Pt 100 (α = 0.00391)	GOST 6651-94	–200 to 550	–328 to 990	±0.45	±0.81
Cu 50 (α =0.00426)	GOST 6651-94	–50 to 200	–58 to 392	±1.44	±2.592
Cu 50 (α = 0.00428)	GOST 6651-94	–185 to 200	–301 to 392	±1.44	±2.592
Cu 100 (α = 0.00426)	GOST 6651-94	–50 to 200	–58 to 392	±0.72	±1.296
Cu 100 (α = 0.00428)	GOST 6651-94	–185 to 200	–301 to 392	±0.72	±1.296
Thermocouples[2]					
Type B[3]	NIST Monograph 175, IEC 584	100 to 1820	212 to 3308	±2.25	±4.05
Type E	NIST Monograph 175, IEC 584	–50 to 1000	–58 to 1832	±0.60	±1.08
Type J	NIST Monograph 175, IEC 584	–180 to 760	–292 to 1400	±1.05	±1.89
Type K[4]	NIST Monograph 175, IEC 584	–180 to 1372	–292 to 2501	±1.46	±2.628
Type N	NIST Monograph 175, IEC 584	–200 to 1300	–328 to 2372	±1.46	±2.628
Type R	NIST Monograph 175, IEC 584	0 to 1768	–32 to 3214	±2.25	±4.05
Type S	NIST Monograph 175, IEC 584	0 to 1768	–32 to 3214	±2.1	±3.78
Type T	NIST Monograph 175, IEC 584	–200 to 400	–328 to 752	±1.05	±1.89
DIN Type L	DIN 43710	–200 to 900	–328 to 1652	±1.05	±1.89
DIN Type U	DIN 43710	–200 to 600	–328 to 1112	±1.05	±1.89
Type W5Re/W26Re	ASTM E 988-96	0 to 2000	–32 to 3632	±2.1	±3.78
GOST Type L	GOST R 8.585-2001	–200 to 800	–328 to 1472	±1.80	±3.24
Other sensor types					
Millivolt input		–10 to 100 mV		±0.045 mV	
2-, 3-, 4-wire ohm input		0 to 2000 ohms		±1.35 ohm	

1. The published digital accuracy applies over the entire sensor input range. Digital output can be accessed by HART Communications or wireless protocol.
2. Total digital accuracy for thermocouple measurement: sum of digital accuracy +0.8 °C (cold junction accuracy).
3. Digital accuracy for NIST Type B T/C is ±16.2 °F (± 9.0 °C) from 212 to 572 °F (100 to 300 °C).
4. Digital accuracy for NIST Type K T/C is ± 35.79 °F (± 2.1 °C) from –292 to –130 °F (–180 to –90 °C).

Ambient temperature effect

Table 3. Rosemount 248 Wireless Ambient Temperature Effect

Sensor options	Sensor reference	Input range (°C)	Temperature effects per 1.0 °C (1.8 °F) change in ambient temperature[1][2]	Range
2-, 3-, 4-wire RTDs				
Pt 100 (α = 0.00385)	IEC 751	–200 to 850	0.009 °C (0.0162 °F)	Entire sensor input range
Pt 200 (α = 0.00385)	IEC 751	–200 to 850	0.012 °C (0.0216 °F)	Entire sensor input range
Pt 500 (α = 0.00385)	IEC 751	–200 to 850	0.009 °C (0.0162 °F)	Entire sensor input range
Pt 1000 (α = 0.00385)	IEC 751	–200 to 300	0.009 °C (0.0162 °F)	Entire sensor input range
Pt 100 (α = 0.003916)	JIS 1604	–200 to 645	0.009 °C (0.0162 °F)	Entire sensor input range
Pt 200 (α = 0.003916)	JIS 1604	–200 to 645	0.012 °C (0.0216 °F)	Entire sensor input range
Ni 120	Edison Curve No. 7	–70 to 300	0.009 °C (0.0162 °F)	Entire sensor input range
Cu 10	Edison Copper Winding No. 15	–50 to 250	0.06 °C (0.162 °F)	Entire sensor input range
Pt 50 (α = 0.003910)	GOST 6651-94	–200 to 550	0.018 °C (0.0324 °F)	Entire sensor input range
Pt 100 (α = 0.003910)	GOST 6651-94	–200 to 550	0.009 °C (0.0162 °F)	Entire sensor input range
Cu 50 (α = 0.00426)	GOST 6651-94	–50 to 200	0.012 °C (0.0216 °F)	Entire sensor input range
Cu 50 (α = 0.00428)	GOST 6651-94	–185 to 200	0.012 °C (0.0216 °F)	Entire sensor input range
Cu 100 (α = 0.00426)	GOST 6651-94	–50 to 200	0.009 °C (0.0162 °F)	Entire sensor input range
Cu 100 (α = 0.00428)	GOST 6651-94	–185 to 200	0.009 °C (0.0162 °F)	Entire sensor input range
Thermocouples				
Type B	NIST Monograph 175, IEC 584	100 to 1820	0.0435 °C	T ≥ 1000 °C
			0.096 °C – (0.0075% of [T – 300])	300 °C ≤ T < 1000 °C
			0.162 °C – (0.033% of [T – 100])	100 °C ≤ T < 300 °C
Type E	NIST Monograph 175, IEC 584	–50 to 1000	0.015 °C + (0.00129% of absolute value T)	All
Type J	NIST Monograph 175, IEC 584	–180 to 760	0.0162 °C + (0.00087% of T)	T ≥ 0 °C
			0.0162 °C + (0.0075% of absolute value T)	T < 0 °C
Type K	NIST Monograph 175, IEC 584	–180 to 1372	0.0183 °C + (0.0027% of T)	T ≥ 0 °C
			0.0183 °C + (0.0075% of absolute value T)	T < 0 °C

Table 3. Rosemount 248 Wireless Ambient Temperature Effect

Thermocouples				
Type N	NIST Monograph 175, IEC 584	–200 to 1300	0.0204 °C + (0.00108% of absolute value T)	All
Type R	NIST Monograph 175, IEC 584	0 to 1768	0.048 °C	T ≥ 200 °C
			0.069 °C – (0.0108% of T)	T < 200 °C
Type S	NIST Monograph 175, IEC 584	0 to 1768	0.048 °C	T ≥ 200 °C
			0.069 °C – (0.0108% of T)	T < 200 °C
Type T	NIST Monograph 175, IEC 584	–200 to 400	0.0192 °C	T ≥ 0 °C
			0.0192 °C + (0.0129% of absolute value T)	T < 0 °C
DIN Type L	DIN 43710	–200 to 900	0.0162 °C + (0.00087% of T)	T ≥ 0 °C
			0.0162 °C + (0.0075% of absolute value T)	T < 0 °C
DIN Type U	DIN 43710	–200 to 900	0.0192 °C	T ≥ 0 °C
			0.0192 °C + (0.0129% of absolute value T)	T < 0 °C
Type W5Re/W26Re	ASTM E 988-96	0 to 2000	0.048 °C	T ≥ 200 °C
			0.069 °C – (0.0108% of T)	T < 200 °C
GOST Type L	GOST R 8.585-2001	–200 to 800	0.021 °C	T ≥ 0 °C
			0.0105 °C + (0.0045% of absolute value T)	T < 0 °C
Other sensor types				
Millivolt input		–10 to 100 mV	0.0015 mV	Entire sensor input range
2-, 3-, 4-wire ohm		0 to 2000 W	0.0252 W	Entire sensor input range

1. Change in ambient is with reference to the calibration temperature of the transmitter 68 °F (20 °C) from factory.
2. Ambient temperature effect specification valid over minimum temperature span of 50 °F (28 °C).

Transmitters can be installed in locations where the ambient temperature is between –40 and 185 °F (–40 and 85 °C). In order to maintain excellent accuracy performance, each transmitter is individually characterized over this ambient temperature range at the factory.

Temperature effects example

When using a Pt 100 (α = 0.00385) sensor input at 30 °C ambient temperature:

- Digital temperature effects: 0.009 °C × (30 – 20) = 0.09 °C
- Worst case error: Digital + Digital temperature effects = 0.45 °C + 0.09 °C = 0.54 °C
- Total probable error: $\sqrt{0.45^2 + 0.09^2} = 0.459$ °C

Product Certifications

Rev 1.5

European Directive Information

A copy of the EC Declaration of Conformity can be found at the end of the Quick Start Guide. The most recent revision of the EC Declaration of Conformity can be found at EmersonProcess.com/Rosemount.

Ordinary Location Certification

As standard, the transmitter has been examined and tested to determine that the design meets the basic electrical, mechanical, and fire protection requirements by a nationally recognized test laboratory (NRTL) as accredited by the Federal Occupational Safety and Health Administration (OSHA).

Telecommunication Compliance

All wireless devices require certification to ensure that they adhere to regulations regarding the use of the RF spectrum. Nearly every country requires this type of product certification. Emerson is working with governmental agencies around the world to supply fully compliant products and remove the risk of violating country directives or laws governing wireless device usage.

FCC and IC

This device complies with Part 15 of the FCC Rules. Operation is subject to the following conditions: This devices may not cause harmful interference, this devices must accept any interference received, including interference that may cause undesired operation. This device must be installed to ensure a minimum antenna separation distance of 20 cm from all persons.

Installing Equipment in North America

The US National Electrical Code® (NEC) and the Canadian Electrical Code (CEC) permit the use of Division marked equipment in Zones and Zone marked equipment in Divisions. The markings must be suitable for the area classification, gas, and temperature class. This information is clearly defined in the respective codes.

USA

I5 USA Intrinsically Safe
Certificate: 70008071 (Polymer housing)
Standards: FM 3600:2011; FM 3610:2010; FM 3611:2004; UL 61010-1:2012; UL 50E:2012; ANSI/IEC 60529:2004
Markings: Intrinsically Safe: CL I, DIV 1, GP A, B, C, D; CL I, DIV 2, GP A, B, C, D; Class I, Zone 0, AEx ia IIC T4/T5 Ga; T4(–50 °C ≤ T_a ≤ +70 °C); T5(–50 °C ≤ T_a ≤ +40 °C); when installed per Rosemount drawing 00249-2020; Type 4X, IP66/67
See Table 4 at the end of the Product Certifications section for Entity Parameters.

Special Condition for Safe Use (X):

1. Battery Exchange: The battery module can be change inside hazardous gas-explosive locations. During battery change it must be assured that the connections are free from dust or dirt.

I5 USA Intrinsically Safe
Certificate: 3039717 (Aluminum housing)
Standards: FM Class 3600:1998; FM Class 3610:2010; FM Class 3611:2004; FM Class 3810:2005; ANSI/NEMA 250:2003; ANSI/IEC 60529:2004
Markings: IS CL I/II/III, DIV 1, GP A, B, C, D, E, F, G; IS CL I, Zone 0, AEx ia IIC; NI CL I, DIV 2, GP A, B, C, D; T4(–50 °C ≤ T_a ≤ +70 °C), T5(–50 °C ≤ T_a ≤ +40 °C) when installed per Rosemount drawing 00249-1000; Type 4X; IP66/67
See Table 4 at the end of the Product Certifications section for Entity Parameters.

N5 USA Nonincendive and Dust-Ignitionproof
Certificate: 3039717 (Aluminum housing)
Standards: FM Class 3600:1998; FM Class 3611:2004; FM Class 3810:2005; ANSI/NEMA 250: 2003; ANSI/IEC 60529: 2004
Markings: NI CL I, DIV 2, GP A, B, C, D; T4(–50 °C ≤ T_a ≤ +70 °C); DIP CL II/III, DIV 1, GP E, F, G; –50 °C ≤ T_a ≤ +85 °C; when installed per Rosemount drawing 00249-1000; Type 4X; IP66/67

Canada

I6 Canada Intrinsically Safe
Certificate: 70008071(Polymer housing)
Standards: CSA C22.2 No. 0-10;
CSA C22.2 No. 94.2-07 (R2012);
CSA C22.2 No. 213-M1987 (R2013);
CAN/CSA-60079-0-11;
CAN/CSA-60079-11-14;
CAN/CSA C22.2 No. 60529-05;
CAN/CSA-C22.2 No. 61010-1-12
Markings: Intrinsically Safe: CL I, DIV 1, GP A, B, C, D;
CL I, DIV 2, GP A, B, C, D; Ex ia IIC T4/T5 Ga;
T4(–50 °C ≤ T_a ≤ +70 °C);
T5(–50 °C ≤ T_a ≤ +40 °C) when installed per Rosemount drawing 00249-2020; Type 4X, IP66/67
See Table 4 at the end of the Product Certifications section for Entity Parameters.

Special Condition for Safe Use (X):

1. Battery Exchange: The battery module can be change inside hazardous gas-explosive locations. During battery change it must be assured that the connections are free from dust or dirt.

I6 Canada Intrinsically Safe
Certificate: 1091070 (Aluminum housing)
Standards: CAN/CSA C22.2 No. 0-10;
CSA Std. C22.2 No. 25-1966;
CAN/CSA C22.2 No. 94-M91;
CAN/CSA C22.2 No. 157-92;
CSA C22.2 No. 213-M1987;
C22.2 No. 60529-05;
CSA Std. C22.2 No. 142-M1987
Markings: Intrinsically Safe: CL I, DIV 1 GP A, B, C, D;
Suitable for use in CL I DIV 2 GP A, B, C, D; T3C;
when installed per Rosemount drawing 00249-1020; Type 4X, IP66/67
See Table 4 at the end of the Product Certifications section for Entity Parameters.

Europe

I1 ATEX Intrinsic Safety
Certificate: Baseefa14ATEX0359X (Polymer housing)
Standards: EN 60079-0:2012; EN 60079-11:2012
Markings:  II 1 G Ex ia IIC T4/T5 Ga;
T4(–60 °C ≤ T_a ≤ +70 °C);
T5(–60 °C ≤ T_a ≤ +40 °C)
See Table 4 at the end of the Product Certifications section for Entity Parameters.

Special Condition for Safe Use (X):

1. The plastic enclosure may present a potential electrostatic ignition hazard and must not be rubbed or cleaned with a dry cloth.

I1 ATEX Intrinsic Safety
Certificate: Baseefa10ATEX0121X (Aluminum housing)
Standards: EN 60079-0:2009; EN 60079-11:2007
Markings: II 1 G Ex ia IIC T4/T5 Ga,
T4(–60 °C ≤ T_a ≤ +70 °C),
T5(–60 °C ≤ T_a ≤ +40 °C);
See Table 4 at the end of the Product Certifications section for Entity Parameters

Special Conditions for Safe Use (X):

1. The plastic antenna may present a potential electrostatic ignition hazard and must not be rubbed or cleaned with a dry cloth.
2. The Rosemount 248 enclosure may be made of aluminum alloy and given a protective polyurethane paint finish; however, care should be taken to protect it from impact or abrasion if located in a Zone 0 area.

International

I7 IECEx Intrinsic Safety
Certificate: IECEx BAS 14.0158X (Polymer housing)
Standards: IEC 60079-0:2011; IEC 60079-11:2011
Markings: Ex ia IIC T4/T5 Ga, T4(–60 °C ≤ T_a ≤ +70 °C), T5(–60 °C ≤ T_a ≤ +40 °C);
See Table 4 at the end of the Product Certifications section for Entity Parameters.

Special Condition for Safe Use (X):

1. The plastic enclosure may present a potential electrostatic ignition hazard and must not be rubbed or cleaned with a dry cloth.

I7 IECEx Intrinsic Safety
Certificate: IECEx BAS 10.0059X (Aluminum housing)
Standards: IEC 60079-0:2011; IEC 60079-11:2011
Markings: Ex ia IIC T4/T5 Ga, T4(–60 °C ≤ T_a ≤ +70 °C), T5(–60 °C ≤ T_a ≤ +40 °C);
See Table 4 at the end of the Product Certifications section for Entity Parameters.

Special Conditions for Safe Use (X):

1. The surface resistivity of the antenna is greater than 1GΩ. To avoid electrostatic charge build-up, it must not be rubbed or cleaned with solvents or a dry cloth.
2. The Rosemount 701PBKKF Power Module and Intelligent Power Module 71008 may be replaced in a hazardous area. The Power Modules have a surface resistivity greater than 1GΩ and must be properly installed in the wireless device enclosure. Care must be taken during transportation to and from the point of installation to prevent electrostatic charge build-up.
3. The Rosemount 248 enclosure may be made of aluminum alloy and given a protective polyurethane paint finish; however, care should be taken to protect it from impact or abrasion if located in a Zone 0 area.

Brazil

I2 INMETRO Intrinsic Safety
Certificate: UL-BR 15.0222X (Polymer housing)
Standards: ABNT NBR IEC 60079-0: 2008 + Corrigendum 1:2011; ABNT NBR IEC 60079-11:2009
Markings: Ex ia IIC T4/T5 Ga; T4 (–60 °C ≤ T_a ≤ +70 °C); T5 (–60 °C ≤ T_a ≤ +40 °C)
See Table 4 at the end of the Product Certifications section for Entity Parameters.

Special Condition for Safe Use (X):

1. The plastic enclosure may present a potential electrostatic ignition hazard and must not be rubbed or cleaned with a dry cloth.

China

I3 NEPSI Intrinsic Safety
Certificate: GYJ15.1143X (Polymer housing)
Standards: GB3836.1-2010, GB3836.4-2010, GB3836.20-2010
Markings: Ex ia IIC T4/T5 Ga; T4 (–60 °C ≤ T_a ≤ +70 °C); T5 (–60 °C ≤ T_a ≤ +40 °C)
See Table 4 at the end of the Product Certifications section for Entity Parameters.

Special Conditions for Safe Use (X):

1. Non-metallic parts incorporated in the enclosure of the product shall only be cleaned with a damp cloth to avoid electrostatic charge.
2. Must use Rosemount 701PGNKF SmartPower Green Power Module provided by the manufacture.

Japan

I4 TIIS Intrinsic Safety
Certificate: TC21031 (Polymer housing)
Markings: Ex ia IIC T4 X (–20 °C ~ +60 °C)
See Table 4 at the end of the Product Certifications section for Entity Parameters.

EAC

IM Technical Regulation Customs Union (EAC) Intrinsic Safety
Certificate: TC RU C-US.AA87.B.00057
Markings: 0Ex ia IIC T4, T5 Ga X, T5(–60 °C ≤ T_a ≤ +40 °C), T4(–60 °C ≤ T_a ≤ +70 °C); IP66/IP67

Special Condition for Safe Use (X):

1. See certificate for special conditions.

Tables

Table 4. Entity Parameters

Parameters	USA, ATEX, IECEx, and Canada (Polymer)	Canada (Aluminum)
Voltage U_o	6.6 V	6.6 V
Current I_o	26.2 mA	26.2 mA
Power P_o	42.6 mW	42.6 mW
Capacitance C_o	11 µF	23.8 µF
Inductance L_o	25 mH	25 mH

Dimensional Drawings

Figure 4. Rosemount 248 Wireless Remote Mount (Polymer Housing)

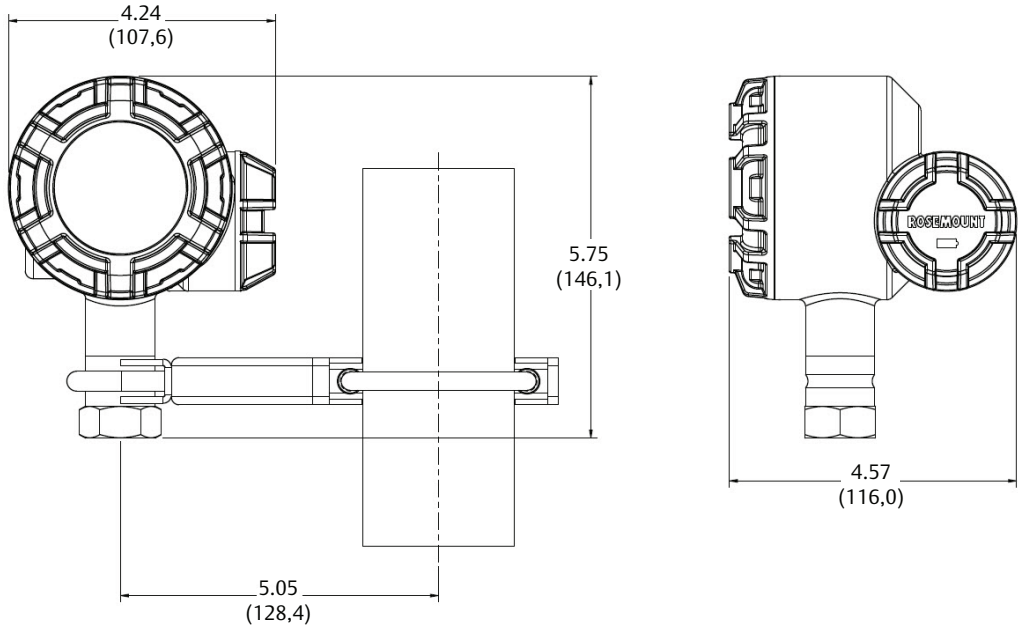

Dimensions are in inches (millimeters).

Figure 5. Rosemount 248 Wireless Direct Mount (Polymer Housing)

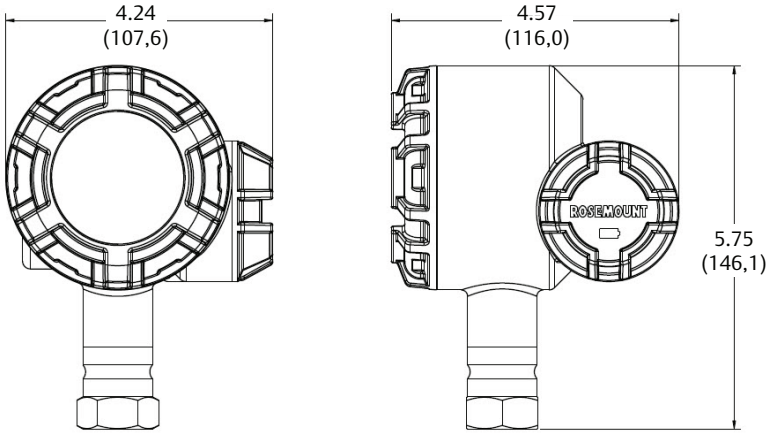

Dimensions are in inches (millimeters).

Figure 6. Rosemount 248 Wireless Remote Mount (Aluminum Housing)

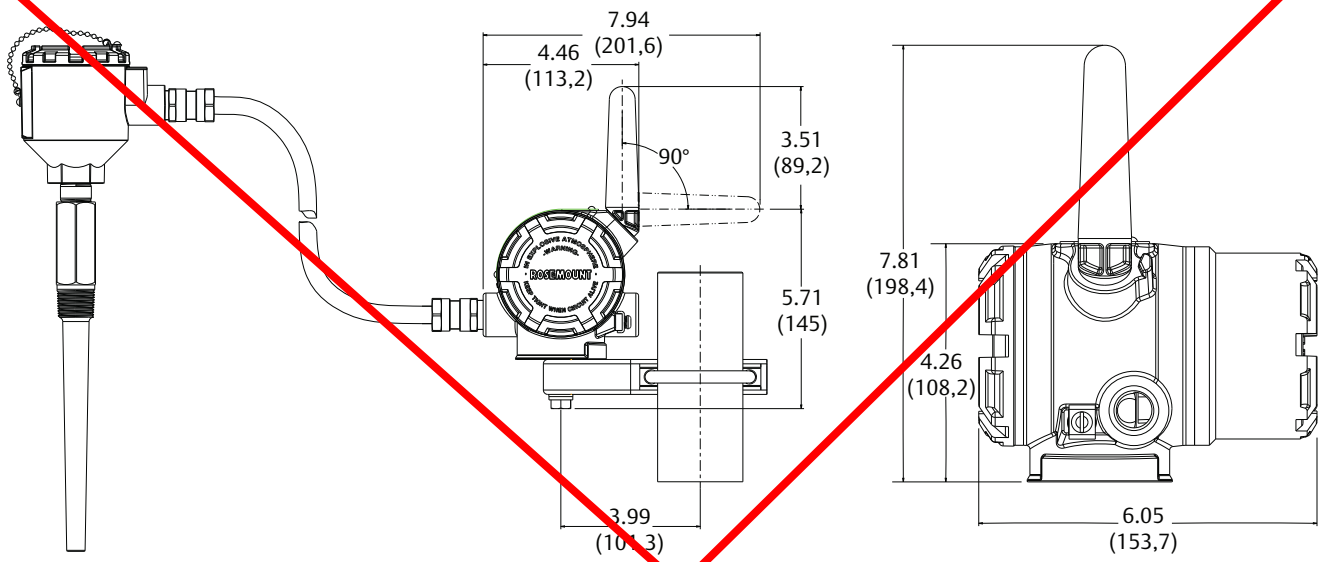

Remote mounted temperature sensor specified separately.
Dimensions are in inches (millimeters).

Figure 7. Rosemount 248 Wireless Direct Mount (Aluminum Housing)

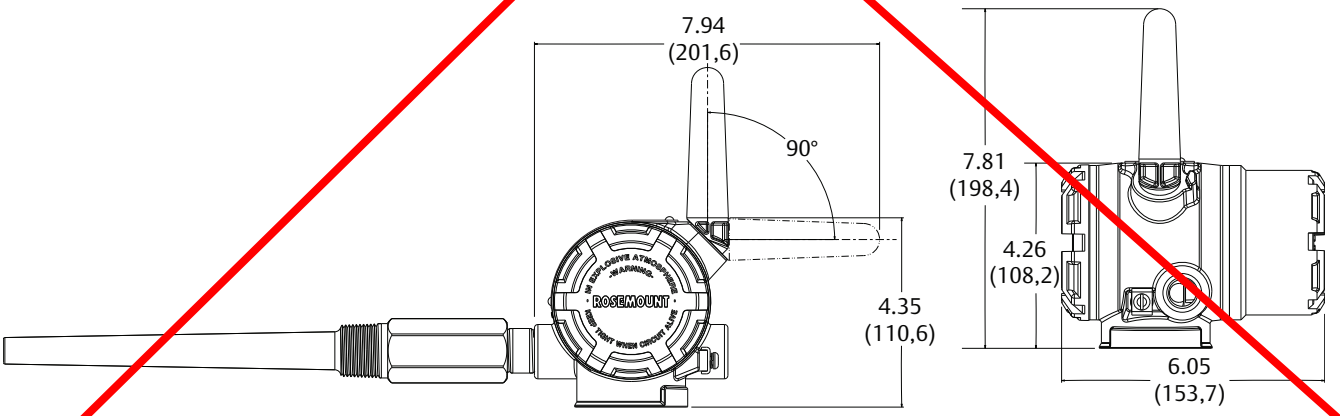

Direct mounted temperature sensor specified separately (see ordering option code XA).
Dimensions are in inches (millimeters).

Global Headquarters
Emerson Process Management
6021 Innovation Blvd.
Shakopee, MN 55379, USA
+1 800 999 9307 or +1 952 906 8888
+1 952 949 7001
RFQ.RMD-RCC@EmersonProcess.com

North America Regional Office
Emerson Process Management
8200 Market Blvd.
Chanhassen, MN 55317, USA
+1 800 999 9307 or +1 952 906 8888
+1 952 949 7001
RMT-NA.RCCRFQ@Emerson.com

Latin America Regional Office
Emerson Process Management
1300 Concord Terrace, Suite 400
Sunrise, FL 33323, USA
+1 954 846 5030
+1 954 846 5121
RFQ.RMD-RCC@EmersonProcess.com

Europe Regional Office
Emerson Process Management Europe GmbH
Neuhofstrasse 19a P.O. Box 1046
CH 6340 Baar
Switzerland
+41 (0) 41 768 6111
+41 (0) 41 768 6300
RFQ.RMD-RCC@EmersonProcess.com

Asia Pacific Regional Office
Emerson Process Management Asia Pacific Pte Ltd
1 Pandan Crescent
Singapore 128461
+65 6777 8211
+65 6777 0947
Enquiries@AP.EmersonProcess.com

Middle East and Africa Regional Office
Emerson Process Management
Emerson FZE P.O. Box 17033,
Jebel Ali Free Zone - South 2
Dubai, United Arab Emirates
+971 4 8118100
+971 4 8865465
RFQ.RMTMEA@Emerson.com

Linkedin.com/company/Emerson-Process-Management

Twitter.com/Rosemount_News

Facebook.com/Rosemount

Youtube.com/user/RosemountMeasurement

Google.com/+RosemountMeasurement

Standard Terms and Conditions of Sale can be found at:
www.Emerson.com/en-us/pages/Terms-of-Use.aspx
The Emerson logo is a trademark and service mark of Emerson Electric Co.
Complete Point Solutions, PlantWeb, SmartPower, Rosemount, and Rosemount logotype are trademarks of Emerson Process Management.
HART and *Wireless*HART are registered trademarks of FieldComm Group.
NEMA is a registered trademark and service mark of the National Electrical Manufacturers Association.
National Electrical Code is a registered trademark of National Fire Protection Association, Inc.
All other marks are the property of their respective owners.
© 2016 Emerson Process Management. All rights reserved.

Product Data Sheet
September 2014
00813-0100-4701, Rev BA

SmartPower™ Solutions



IEC

WirelessHART CE

- Intrinsically Safe design enables ability to perform routine maintenance in hazardous areas
- Predictable life specified under installed conditions
- Robust design for use in harsh environments
- Low Level alerts for easy maintenance
- Keyed connection for easy and fail-safe replacement

ROSEMOUNT

EMERSON.
Process Management

IEC 62591 (*Wireless*HART™)... the Industry Standard

Self-organizing, adaptive mesh routing

- No wireless expertise required, devices automatically find the best communication paths
- Network continuously monitors paths for degradation and repairs itself
- Adaptive behavior provides reliable, hands-off operation and simplifies network deployments, expansion, and reconfiguration
- Supports both star and mesh topologies

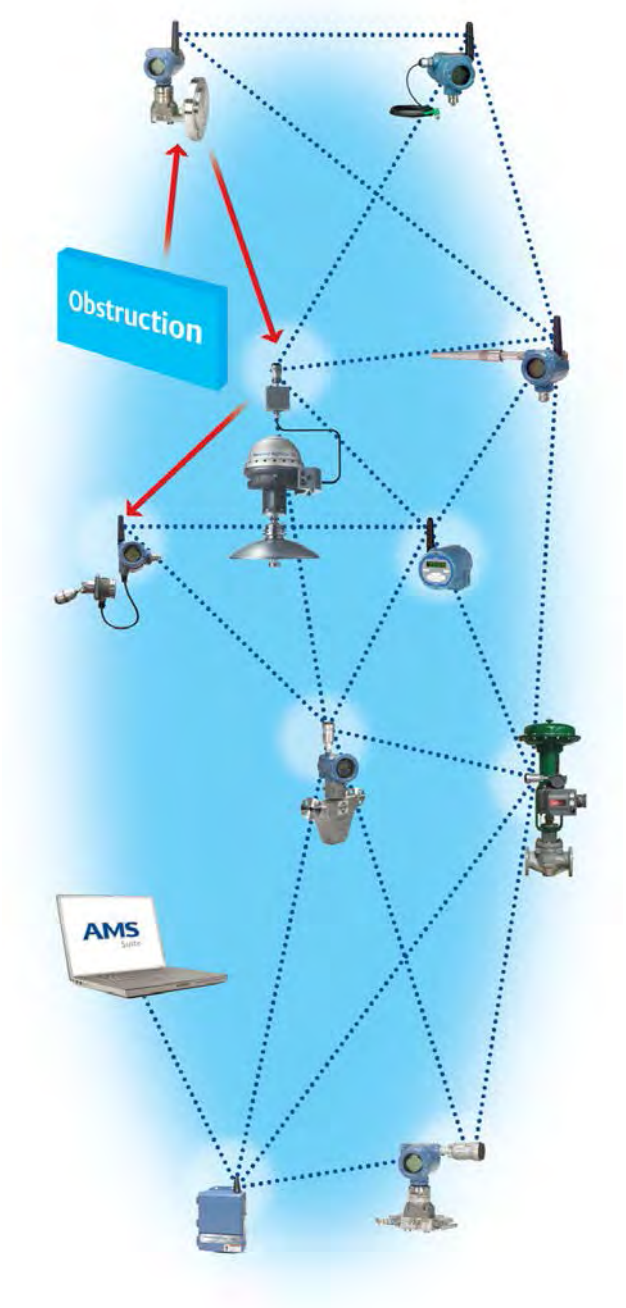

Industry standard radio with channel hopping

- Standard IEEE 802.15.4 radios
- 2.4 GHz ISM band sliced into 16 radio-channels
- Continually "hop" across channels to avoid interference and increase reliability
- Direct Sequence Spread Spectrum (DSSS) technology delivers high reliability in challenging radio environment

Self-healing network

- The self-organizing, self-healing network manages multiple communication paths for any given device. If an obstruction is introduced into the network, data will continue to flow because the device already has other established paths. The network will then lay in more communication paths as needed for that device.

Seamless integration to existing hosts

- Transparent and seamless integration
- Same control system applications
- Gateways connect using industry protocols

Contents

IEC 62591 (WirelessHART™)... the Industry Standard . . 2
SmartPower Solutions 3
Ordering Information 4
Specifications 5
Product Certifications – 701P SmartPower Solutions . . . 6
Dimensional Drawings 7

SmartPower Solutions



Black power module

For 702 Wireless Discrete Transmitter

- Hazardous Area Certifications: FM, CSA, ATEX, IECEx
- Designed for use with:

  Rosemount 702 Wireless Discrete Transmitter
  Rosemount 3051S Wireless Pressure Transmitter
  Rosemount 648 Wireless Temperature Transmitter
  Rosemount 848T Wireless Temperature Transmitter
  Rosemount 248 Wireless Temperature Transmitter
  CSI 9420 Wireless Vibration Transmitter
  Rosemount Analytical 6081 Wireless Transmitter for pH andConductivity
  Rosemount 2160 Wireless Vibrating Fork Liquid Level Switch
  Rosemount 3308 Wireless Guided Wave Radar Level and Interface Transmitter



Green power module

For 248 Wireless Temp Transmitter

- Hazardous Area Certifications: FM, CSA, ATEX, IECEx
- Designed for use with:

  Rosemount 708 Wireless Acoustic Transmitter
  Rosemount 3051 Wireless Pressure Transmitter
  Rosemount 2051 Wireless Pressure Transmitter

Intrinsically safe power solution

- SmartPower Modules can be changed in hazardous areas
- No need to remove transmitter from process to change power module

Predictable life

- Life expectancies specified under installed conditions
- Up to 10 year life depending on update rate

Easy maintenance

- Low level alerts for easy planning of replacements
- Keyed connections for easy replacement and fail-safe connection

Safe robust design

- Short circuit protection
- No special training required
- Designed for harsh environments

Ordering Information

Specification and selection of product materials, options, or components must be made by the purchaser of the equipment. See page 5 for more information on material selection.

Table 1. SmartPower Solutions Ordering Information

★ The Standard offering represents the most common options. The starred options (★) should be selected for best delivery.
The Expanded offering is subject to additional delivery lead time.

Model	Product description	
701P	SmartPower Options	
SmartPower type		
BK	Black Power Module	★
GN	Green Power Module	★
Certification		
KF	FM, CSA, ATEX, and IECEx Intrinsically Safe	★
Typical model number: 701PBKKF		

Specifications

Functional specifications

Life expectancy

Up to 10-year life at 1 minute update rate. See Table on page 5 for more information.

Humidity limits

0–100% relative humidity

Physical specifications

Material selection

Emerson provides a variety of Rosemount product with various product options and configurations including materials of construction that can be expected to perform well in a wide range of applications. The Rosemount product information presented is intended as a guide for the purchaser to make an appropriate selection for the application. It is the purchaser's sole responsibility to make a careful analysis of all process parameters (such as all chemical components, temperature, pressure, flow rate, abrasives, contaminants, etc.), when specifying product, materials, options and components for the particular application. Emerson Process Management is not in a position to evaluate or guarantee the compatibility of the process fluid or other process parameters with the product, options, configuration or materials of construction selected.

Electrical connections

Emerson SmartPower solutions were designed for use with various Smart Wireless devices.
The black power module is used with the 3051S, 648, 848, 702, 2160, 9420, and 6081.
The green power module is used with the 708, 3051C, and 2051.

Rated voltage

Black Power Module: 7.2 V
Green Power Module: 3.6 V

Materials of construction

Lithium-thionyl chloride with a polybutylene terephthalate (PBT) enclosure.

Weight

Black Power Module -0.50 lb. (230 g)
Green Power Module - 0.34 lb. (155 g)

Performance specifications

Electromagnetic compatibility (EMC)

All Models:
Meets all relevant requirements of EN 61326-1; 2006; EN 61326-2-3; 2006.

Vibration effect

No effect when tested per the requirements of IEC60770-1: High Vibration Level - field or pipeline (10-60 Hz 0.21 mm displacement peak amplitude / 60-2000 Hz 3g).

Temperature limits

Operating limit	Storage limit
–40 to 185 °F –40 to 85 °C	–40 to 185 °F –40 to 85 °C

Power module life

Power module life in a given wireless transmitter is mainly a function of the wireless update rate. Faster wireless updates lead to lower power module life. Power module life is also impacted by extreme temperature service and wireless network conditions.

Table 2. Power Module Life Estimates

Power module life estimates in years							
Update	4 sec	16 sec	60 sec	300 sec	20 min	40 min	60 min
3051S	2.2	5.8	10.0	10.0	10.0	10.0	10.0
3051	2.2	5.8	10.0	10.0	10.0	10.0	10.0
2051	2.2	5.8	10.0	10.0	10.0	10.0	10.0
648	2.8	6.9	10.0	10.0	10.0	10.0	10.0
848	0.7	2.4	6.3	10.0	10.0	10.0	10.0
248	2.8	6.9	10.0	10.0	10.0	10.0	10.0
702	4.1	8.8	10.0	10.0	10.0	10.0	10.0
2160	2.0	6.0	10.0	10.0	10.0	10.0	10.0
708	3.8	8.4	10.0	10.0	10.0	10.0	10.0
3308	1.5	4.7	10.0	10.0	10.0	10.0	10.0
6081 pH	2.1	2.8	3.2	10.0	10.0	10.0	10.0
6081 C	2.4	5.5	8.7	10.0	10.0	10.0	10.0
4310/20 Std	4.0	7.2	9.0	10.0	10.0	10.0	10.0
4310/20 Ext	8.4	10.0	10.0	10.0	10.0	10.0	10.0
9420(1)	NR	NR	NR	NR	1.5	2.4	3.0

Assumptions

- 3 Network Descendants
- 70 °F Ambient Temperature
- 10 years is shelf life of lithium cell
- +/- 10% capacity for temperature and network variation

Note
NR: this update rate not recommended for this product

(1) Applies to Rev. 5.02 or higher. Results may be substantially lower with older product revisions

To better estimate power module life for a wireless transmitter in your network, visit
http://www2.emersonprocess.com/en-US/brands/rosemount/Wireless/SmartPower-Solutions/Pages/index.aspx
for an on-line power module life estimator.

Product Certifications – 701P SmartPower Solutions

European Directive Information

A copy of the EC Declaration of Conformity can be found at the end of the Quick Start Guide. The most recent revision of the EC Declaration of Conformity can be found at www.rosemount.com.

Ordinary Location Certification for FM Approvals

As standard, the transmitter has been examined and tested to determine that the design meets the basic electrical, mechanical, and fire protection requirements by FM Approvals, a nationally recognized test laboratory (NRTL) as accredited by the Federal Occupational Safety and Health Administration (OSHA).

Installing in North America

The US National Electrical Code (NEC) and the Canadian Electrical Code (CEC) permit the use of Division marked equipment in Zones and Zone marked equipment in Divisions. The markings must be suitable for the area classification, gas, and temperature class. This information is clearly defined in the respective codes.

USA

KF FM Intrinsic Safety (IS)
Certificate: 3042016
Standards: FM Class 3600 – 1998, FM Class 3610 – 2010, FM Class 3810 – 2005
Markings: IIS CL I, DIV 1, GP 1, B, C, D; CL II, DIV 1, GP E, F, G; Class III; Class 1, Zone 0 AEx ia IIC T4; NI CL I, DIV 2, GP A, B, C, D T4; (-40 °C ≤ T_a ≤ +70 °C)
(See Table 3 or Table 4 for parameters)

Special Condition for Safe Use (X):

1. Replacement of power module, see instructions for final product.

Canada

KF CSA Intrinsically Safe
Certificate: 2430393
Standards: CAN/CSA C22.2 No. 0-M91, CSA Std C22.2 No. 157-92
Markings: Intrinsically Safe Class I, Division 1, Groups A, B, C, and D T3C (Ta ≤ +70 °C) Warning – refer to | QSG 825-0100-4701 for Safe I.S. Use
(See Table 3 or Table 4 for parameters)

Specific Condition for Safe Use (X):

1. The power modules are certified as components for use in intrinsically safe products where the suitability/ combination of use in the final assembly shall be subjected to CSA acceptance. The final assembly must incorporate all protection features necessary for batteries in accordance with applicable standards of the final intrinsically safe application.

Europe

KF ATEX Intrinsic Safety
Certificate: Baseefa11ATEX0042X
Standards: EN 60079-0: 2012, EN 60079-11: 2012
Markings: Ex II 1G Ex ia IIC T4 Ga, T4(-60 °C ≤ Ta ≤ +70 °C)
Ex II 1G Ex ia IIC T5 Ga, T5(-55 °C ≤ Ta ≤ +40 °C)
(See Table 3 or Table 4 for parameters)

Special Condition for Safe Use (X):

1. The plastic enclosure of the Model 701P SmartPower Power Modules may constitute a potential electrostatic ignition risk and caution should be used when being handled.

Note
This condition of use does not apply after a Power Module is installed within a wireless transmitter enclosure.

International

KF IECEx Intrinsic Safety
Certificate: IECEx BAS 11.0026X
Standards: IEC 60079-0: 2011, IEC 60079-11: 2011
Markings: Ex ia IIC T4/T5 Ga T4(-40 °C ≤ Ta ≤ +70 °C), T5(-40 °C ≤ Ta ≤ +40 °C)

Special Condition for Safe Use (X):

1. The plastic enclosure of the Model 701P SmartPower Power Modules may constitute a potential electrostatic ignition risk and caution should be used when being handled.

Note
This condition of use does not apply after a Power Module is installed within a wireless transmitter enclosure.

Safety parameters

Table 3. 701PBKKF

U_o	7.8V
I_o	2.16A
P_o	0.83W
C_o	3.0µF
L_o	7.6µH

Table 4. 701PGNKF

U_o	3.9 V
I_o	2.78 A
P_o	2.71 W
C_o	100 µF
L_o	4.6 µH

Dimensional Drawings

Figure 1. 701PGN Green Power Module

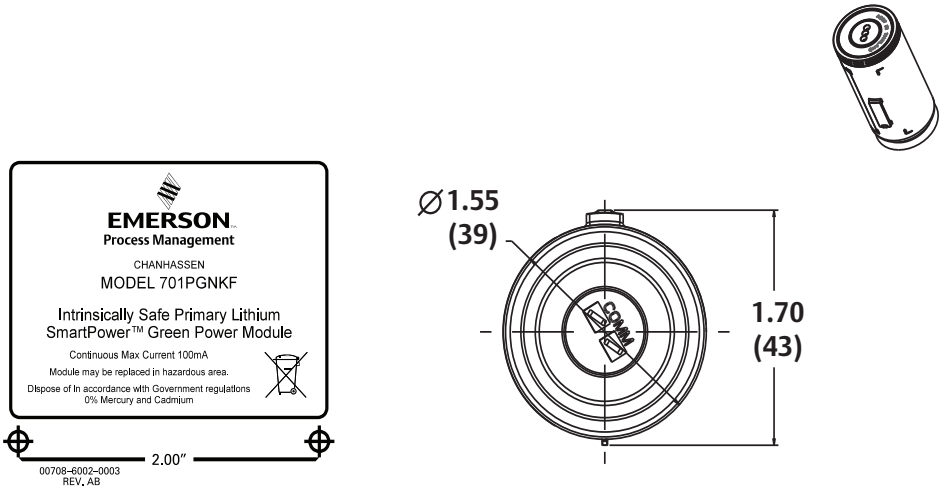

Dimensions are in inches (millimeters).

Figure 2. 701PBK Black Power Module

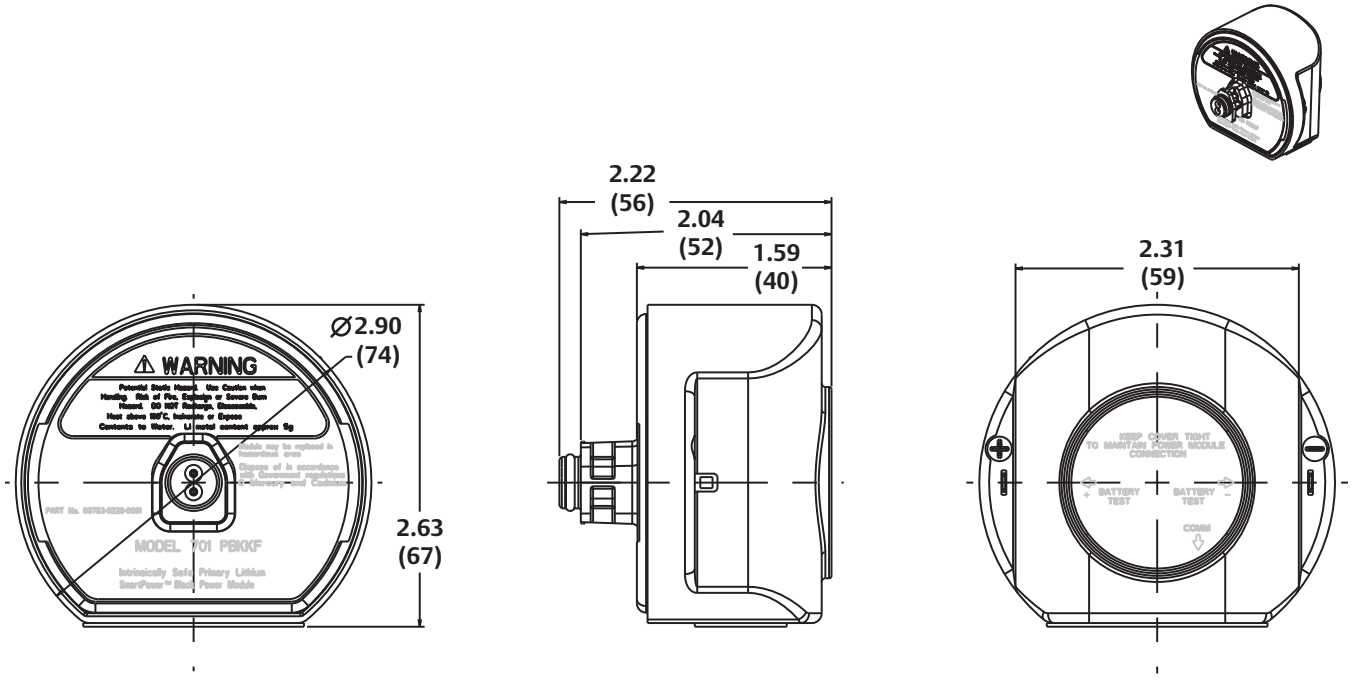

Dimensions are in inches (millimeters).

Emerson Process Management
Rosemount Inc.
8200 Market Boulevard
Chanhassen, MN 55317 USA
T (U.S.) 1-800-999-9307
T (International) (952) 906-8888
F (952) 906-8889
www.rosemount.com

Emerson Process Management
Blegistrasse 23
P.O. Box 1046
CH 6341 Baar
Switzerland
T +41 (0) 41 768 6111
F +41 (0) 41 768 6300
www.rosemount.com

Emerson Process Management
Asia Pacific Pte Ltd
1 Pandan Crescent
Signapore 128461
T +65 6777 8211
F +65 6777 0947
Service Support Hotline: +65 6770 8711
Email: Enquiries@AP.EmersonProcess.com
www.rosemount.com

Emerson Process Management
Latin America
1300 Concord Terrace, Suite 400
Sunrise, Florida 33323 USA
Tel + 1 954 846 5030

www.rosemount.com

Standard Terms and Conditions of Sale can be found at www.rosemount.com\terms_of_sale.
The Emerson logo is a trade mark and service mark of Emerson Electric Co.
SmartPower, Rosemount, and the Rosemount logotype are registered trademarks of Rosemount Inc.
*Wireless*HART are registered trademarks of the HART Communication Foundation.
All other marks are the property of their respective owners.
© 2014 Rosemount Inc. All rights reserved.

ROSEMOUNT

EMERSON.
Process Management

APPENDIX T10

Leak Detection Sensor



- Our wall mount level switch will provide leak detection for your tank containments or high level alarming with one of ours or your controls.
- Optional mounting brackets are available upon request.
- Custom lengths are available.
- Wetted material CPVC, ~~TEFLON or PVDF (Kynar), TEFLON~~.
- Also available with tank adapter to install on top of tank for high high alarm.

Large Size – Engineered Plastics

Select from these Engineered Plastics for Aggressive or Ultra-Pure Liquids

Each of these series offers unique features. Choose from this selection when all-plastic material is desirable and tank space is not restricted.

LS-74780 – All CPVC



Particularly well suited for rough service. Ideal for use in chemical and plating applications.

LS-1900TFE



Resists build-up of foreign material or sticky media. Float travel remains uninhibited in viscous or corrosive liquids. SPDT switch.

LS-1700TFE

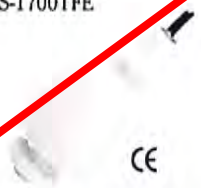

A medium-size solution for ultra-pure liquid level sensing. Made of corrosion resistant PTFE for low particle generation.

Dimensions

LS-74780

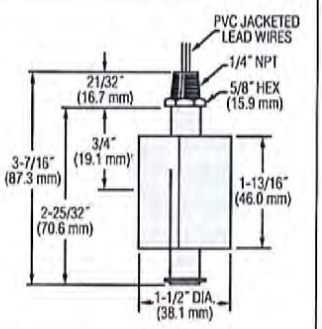

LS-1900TFE

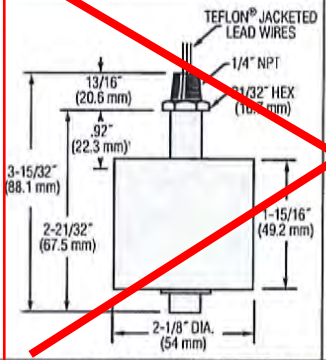

LS-1700TFE

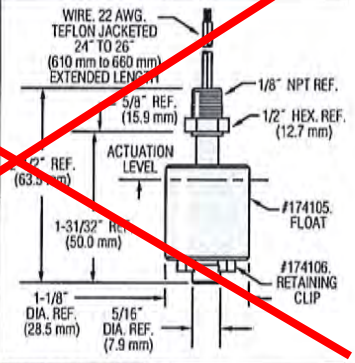

†L_1=Switch actuation level, nominal (based on a liquid specific gravity of 1.0 and N.O. dry circuit–dimension will vary for N.C. circuit).

Common Specifications

Electrical Termination: No. 18 AWG, 24" L., Lead Wires
(Jacket material is indicated on dimensional drawings, above).

How To Order – Select Part Number based on specifications required.

Series Number	Materials: Stem, Mounting and Other Wetted	Materials: Float	Min. Liquid Sp. Gr.	Operating Temperature	Pressure, PSI, Max.	Switch*	Part Number: Mounting Size 1/4" NPT	Part Number: Mounting Size 1/8" NPT
LS-74780	CPVC		.85	-40°F to +180°F (-40°C to +82.2°C)	15	SPST, 20 VA	74780** ⚡	—
LS-1900TFE	Teflon®		.80	-40°F to +300°F (-40°C to +148.9°C)	30	SPDT, 20 VA	133299 ⚡	—
~~LS-1700TFE~~	~~PTFE~~		~~.80~~	~~-40°F to +212°F (-40°C to +100°C)~~	~~25~~	~~SPST, 20 VA, N.C.~~	~~—~~	~~174199 ⚡~~
						SPST, 20 VA, N.C.	—	174200 ⚡

* See "Electrical Data" on Page X-5 for more information.
** Switch operation is selectable, N.O. or N.C., by inverting the float on the unit stem. Units are shipped N.O. unless otherwise specified.
†† 100 VA switches are not U.L. Recognized.

⚡ – Stock Items.

APPENDIX T11

Plumbing Items

(Basic Information on Pipe, Valves, and Gauges)

CHARLOTTE
PIPE AND FOUNDRY COMPANY

SUBMITTAL FOR CHARLOTTE PIPE®
PVC SCHEDULE 80 PRESSURE PIPE AND FITTING SYSTEM

Date: 10-8-15

Job Name: SOLUTIA GROUNDWATER RA Location: _____

Engineer: GOLDER ASSOCIATES Contractor: TAYLOR CORPORATION

Scope:
This specification covers PVC Schedule 80 pipe and fittings for pressure applications. This system is intended for pressure applications where the operating temperature will not exceed 140° F.

Specification:
Pipe and fittings shall be manufactured from virgin rigid PVC (polyvinyl chloride) vinyl compounds with a cell class of 12454 as identified in ASTM D 1784.

PVC Schedule 80 pipe shall be Iron Pipe Size (IPS) conforming to ASTM D 1785. Injection molded PVC Schedule 80 fittings shall conform to ASTM D 2467. PVC Schedule 80 threaded fittings shall conform to ASTM D 2464. Pipe and fittings shall be manufactured as a system and be the product of one manufacturer. All pipe and fittings shall be manufactured in the United States. Pipe and fittings shall conform to NSF International Standard 61 or the health effects portion of NSF Standard 14.

Installation:
Installation shall comply with the latest installation instructions published by Charlotte Pipe and Foundry and shall conform to all applicable plumbing, fire, and building code requirements. Buried pipe shall be installed in accordance with ASTM F 1668 and ASTM D 2774. Solvent cement joints shall be made in a two-step process with primer manufactured for thermoplastic piping systems and solvent cement conforming to ASTM D 2564. The system shall be protected from chemical agents, fire-stopping materials, thread sealant, plasticized-vinyl products or other aggressive chemical agents not compatible with PVC compounds. The system shall be hydrostatically tested after installation. **WARNING!** Never test with or transport/store compressed air or gas in PVC pipe or fittings. Doing so can result in explosive failures and cause severe injury or death.

Referenced Standards:

ASTM D 1784: Rigid Vinyl Compounds
ASTM D 1785: PVC Plastic Pipe, Schedule 80
ASTM D 2464 or D 2467: PVC Threaded Fittings, Schedule 80
ASTM D 2467: PVC Socket Fittings, Schedule 80
ASTM D 2564: Solvent Cements for PVC Pipe and Fittings
ASTM D 2774: Underground Installation of Thermoplastic Pressure Piping
ASTM F 1668: Procedures for Buried Plastic Pipe
NSF Standard 14: Plastic Piping Components & Related Materials
NSF Standard 61: Drinking Water System Components–Health Effects

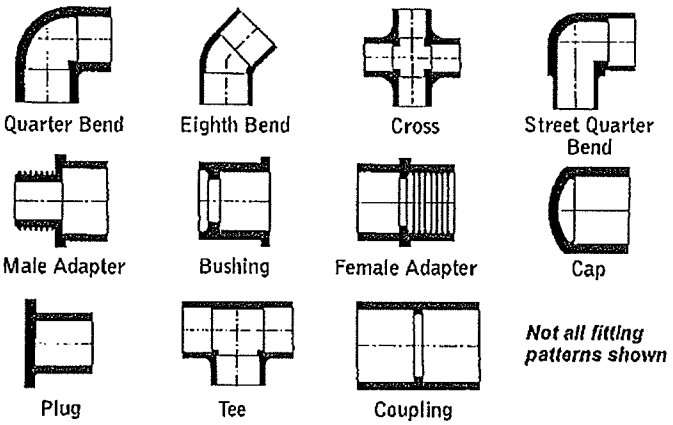

Not all fitting patterns shown


Van Stone Flange

Schedule 80 Tapered Socket Dimensions

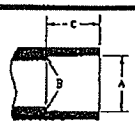

PVC SCHEDULE 80 - ASTM D 2467

Nominal Size	Schedule 80 and Schedule 40 Socket Diameter: Entrance A	Bottom B	Tolerance	Schedule 80 Socket Length C (Minimum)	Schedule 40 Socket Length C (Minimum)
½	0.848	0.836	±0.004	0.875	0.688
¾	1.058	1.046	±0.004	1.000	0.719
1	1.325	1.310	±0.005	1.125	0.875
1¼	1.670	1.655	±0.005	1.250	0.938
1½	1.912	1.894	±0.006	1.375	1.094
2	2.387	2.369	±0.006	1.500	1.156
2½	2.889	2.868	±0.007	1.750	1.750
3	3.516	3.492	±0.008	1.875	1.875
4	4.518	4.491	±0.009	2.250	2.000
6	6.647	6.614	±0.011	3.000	3.000
8	8.655	8.610	±0.015	4.000	4.000
10	10.780	10.735	±0.015	5.000	5.000
12	12.780	12.735	±0.015	6.000	6.000

PIPE REFERENCE GUIDE

Product	Sizes Available: ¼	⅜	½	¾	1	1¼	1½	2	2½	3	4	6	8	10	12	14	16
PVC Schedule 80	•	•	•	•	•	•	•	•	•	•	•	•	•	•	•	•	•

Charlotte Pipe and Charlotte Pipe and Foundry Company are registered trademarks of Charlotte Pipe and Foundry Company.

CHARLOTTE
PIPE AND FOUNDRY COMPANY

This is to certify that all Plastic Pipe and Fittings manufactured by Charlotte Pipe and Foundry Company are manufactured in the United States and conform to the following standards:

PVC SCH. 40 SOLID WALL PIPE
ASTM D 1784, ASTM D 1785, ASTM D 2665
FHA UM 79a
FEDERAL SPECIFICATION L-P-320a
NSF STANDARD NO. 14 AND 61

PVC SCH. 40 DWV CELLULAR CORE PIPE
ASTM D 4396, ASTM F 891
NSF STANDARD NO. 14

RePVC® SCH. 40 DWV PIPE
ASTM D 4396, ASTM F 1760
NSF STANDARD NO. 14

PVC SCH. 40 DWV FITTINGS
ASTM D 1784, ASTM D 2665, ASTM D 3311,
ASTM F 1866
FHA UM 79a
FEDERAL SPECIFICATION L-P-320a
NSF STANDARD NO. 14

PVC SDR-21 AND SDR-26 PRESSURE PIPE
ASTM D 1784, ASTM D 2241
NSF STANDARD NO. 14 AND 61

PVC SCH. 40 PRESSURE FITTINGS
ASTM D 1784, ASTM D 2466
NSF STANDARD NO. 14 AND 61

PVC SCH. 40 WELL CASING PIPE
ASTM D 1784, ASTM F 480
NSF STANDARD NO. 14 AND 61

PVC SCH. 80 PIPE
ASTM D 1784, ASTM D 1785, PVC 1120
NSF STANDARD NO. 14 AND 61

→ **PVC SCH. 80 FITTINGS**
ASTM D 1784, ASTM D 2467, ASTM D 2464,
ASTM F 1970
NSF STANDARD NO. 14 AND 61

PVC SDR 35 SEWER MAIN PIPE
ASTM D 1784, ASTM D 3034 SDR 35
ASTM D 3212, ASTM F 477

PVC SEWER AND DRAIN PIPE
ASTM D 1784, ASTM D 2729

PVC THIN WALL PIPE & FITTINGS
ASTM D 1784, ASTM D 2949
NSF STANDARD NO. 14

CPVC FLOWGUARD GOLD® CTS PIPE & FITTINGS
ASTM D 1784, ASTM D 2846
FHA UM-61a
NSF STANDARD NO. 14. AND 61
CSA LISTED ON SPECIFIED ITEMS

CPVC REUZE® CTS PIPE
ASTM D 1784, ASTM D 2846
NSF STANDARD NO. 14

CPVC CHEMDRAIN® SCH. 40 PIPE & FITTINGS
ASTM D 1784, ASTM F 2618
NSF STANDARD NO. 14

ABS SCH. 40 DWV CELLULAR CORE PIPE
ASTM D 3965, ASTM F 628
NSF STANDARD NO. 14

ABS PLUS® SCH. 40 DWV CELLULAR CORE PIPE
ASTM D 3965, ASTM D 4396, ASTM F 1488
NSF STANDARD NO. 14

ABS SCH. 40 DWV FITTINGS
ASTM D 3965, ASTM D 2661, ASTM D 3311
FHA UM 79a
FEDERAL SPECIFICATION L-P-322b
NSF STANDARD NO. 14

Very truly yours,

Hooper Hardison

Hooper Hardison, President

Terri L. Wilson

Notary Public
My commission expires July 02, 2017

TERRI L. WILSON
NOTARY PUBLIC
Union County, North Carolina
My Commission Expires July 2, 2017

LC-PL (1-27-14)

PO Box 35430 Charlotte, NC 28235 USA 704/372-5030 800/438-6091 FAX 800/553-1605
www.charlotteplpe.com

CHARLOTTE
PIPE AND FOUNDRY COMPANY®

PVC Schedule 80 Pipe

PVC Schedule 80 Pipe, Type 1, Grade 1 - Plain End

NSF

PVC SCHEDULE 80 (GRAY)			PLAIN END			PVC 1120	
PART NO.	NOM. SIZE	UPC # 611642-	QTY. PER SKID	AVG. OD (IN.)	MIN. WALL (IN.)	MAX WORK PRESSURE AT 23° C OR 73° F	WT. PER 100 FT. (LBS.)
PVC 10002	1/4" x 20'	04920	15140'	0.540	.119	1130 PSI	10.0
PVC 10003	3/8" x 20'	04917	9360'	0.675	.126	920 PSI	13.8
PVC 10005	1/2" x 20'	03968	6880'	0.840	.147	850 PSI	20.3
PVC 10007	3/4" x 20'	03969	4200'	1.050	.154	690 PSI	27.5
PVC 10010	1" x 20'	03970	3540'	1.315	.179	630 PSI	40.5
PVC 10012	1 1/4" x 20'	03973	4240'	1.660	.191	520 PSI	55.9
PVC 10015	1 1/2" x 20'	03976	3300'	1.900	.200	470 PSI	67.7
PVC 10020	2" x 20'	03977	1980'	2.375	.218	400 PSI	93.6
PVC 10025	2 1/2" x 20'	03978	1360'	2.875	.276	420 PSI	142.8
PVC 10030	3" x 20'	03979	960'	3.500	.300	370 PSI	194.2
PVC 10040	4" x 20'	03980	1080'	4.500	.337	320 PSI	279.3
PVC 10060	6" x 20'	03981	480'	6.625	.432	280 PSI	532.7
PVC 10080	8" x 20'	04175	300'	8.625	.500	250 PSI	808.9
PVC 10100	10" x 20'	04768	160'	10.750	.593	230 PSI	1199.3
PVC 10120	12" x 20'	04770	120'	12.750	.687	230 PSI	1650.1
PVC 10140	14" x 20'	04816	60'	14.000	.750	220 PSI	1930.0
PVC 10160	16" x 20'	04919	60'	16.000	.843	220 PSI	2544.1

Note: Full pallets are polyethylene wrapped for cleanliness and UV protection.

NSF Listed. Meets All Requirements of ASTM D 1784 and ASTM D 1785.

⚠ WARNING

Testing with or use of compressed air or gas in PVC / ABS / CPVC pipe or fittings can result in explosive failures and cause severe injury or death.



- NEVER test with or transport/store compressed air or gas in PVC / ABS / CPVC pipe or fittings.
- NEVER test PVC / ABS / CPVC pipe or fittings with compressed air or gas, or air over water boosters.
- ONLY use PVC / ABS / CPVC pipe or fittings for water or approved chemicals.
- Refer to warnings on PPFA's website and ASTM D 1785.

CHARLOTTE
PIPE AND FOUNDRY COMPANY®

PVC Schedule 80 Pipe

PVC Schedule 80 Pipe, Type 1, Grade 1 - Belled End

NSF

PVC SCHEDULE 80 (GRAY)			BELLED-END				PVC 1120
PART NO.	NOM. SIZE	CPC # LISTED	QTY. PER SKID	AVG. OD (IN.)	SCH. WALL (IN.)	WORKING PRESSURE AT 73° F/23° C	WT. PER 100 FT. (LBS.)
PVC 10005B	½" x 20'	04924	6880'	0.840	.147	850 PSI	20.3
PVC 10007B	¾" x 20'	04925	4200'	1.050	.154	690 PSI	27.0
PVC 10010B	1" x 20'	04926	3540'	1.315	.179	630 PSI	40.5
PVC 10012B	1¼" x 20'	04927	4240'	1.660	.191	520 PSI	55.9
PVC 10015B	1½" x 20'	04928	3300'	1.900	.200	470 PSI	67.7
PVC 10020B	2" x 20'	04764	1980'	2.375	.218	400 PSI	93.6
PVC 10025B	2½" x 20'	04875	1360'	2.875	.276	420 PSI	142.8
PVC 10030B	3" x 20'	04776	960'	3.500	.300	370 PSI	191.1
PVC 10040B	4" x 20'	04774	1080'	4.500	.337	320 PSI	279.3
PVC 10060B	6" x 20'	04763	480'	6.625	.432	280 PSI	532.7
PVC 10080B	8" x 20'	04766	300'	8.625	.500	250 PSI	808.9
PVC 10100B	10" x 20'	04769	160'	10.750	.593	230 PSI	1199.3
PVC 10120B	12" x 20'	04771	120'	12.750	.687	230 PSI	1650.1
PVC 10140B	14" x 20'	04832	60'	14.000	.750	220 PSI	1930.0
PVC 10160B	16" x 20'	09372	60'	16.000	.843	220 PSI	2544.1

Note: Full pallets are polyethylene wrapped for cleanliness and UV protection.

NSF Listed. Meets All Requirements of ASTM D 1784 and ASTM D 1785.



⚠ WARNING

Testing with or use of compressed air or gas in PVC / ABS / CPVC pipe or fittings can result in explosive failures and cause severe injury or death.



- NEVER test with or transport/store compressed air or gas in PVC / ABS / CPVC pipe or fittings.
- NEVER test PVC / ABS / CPVC pipe or fittings with compressed air or gas, or air over water boosters.
- ONLY use PVC / ABS / CPVC pipe or fittings for water or approved chemicals.
- Refer to warnings on FPFA's website and ASTM D 1785.

Schedule 80 Fittings

Schedule 80 and Schedule 40 Tapered Socket Dimensions

PVC SCHEDULE 80 - ASTM D 2467
PVC SCHEDULE 40 - ASTM D 2466

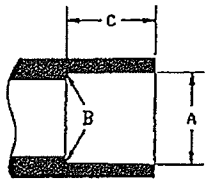

Nominal Size	Schedule 80 and Schedule 40 Socket Diameter			Schedule 80 Socket Length C (Minimum)	Schedule 40 Socket Length C (Minimum)
	Entrance A	Bottom B	Tolerance		
½	0.848	0.836	±0.004	0.875	0.688
¾	1.058	1.046	±0.004	1.000	0.719
1	1.325	1.310	±0.005	1.125	0.875
1¼	1.670	1.655	±0.005	1.250	0.938
1½	1.912	1.894	±0.006	1.375	1.094
2	2.387	2.369	±0.006	1.500	1.156
2½	2.889	2.868	±0.007	1.750	1.750
3	3.516	3.492	±0.008	1.875	1.875
4	4.518	4.491	±0.009	2.250	2.000
6	6.647	6.614	±0.011	3.000	3.000
8	8.655	8.610	±0.015	4.000	4.000
10	10.780	10.735	±0.015	5.000	5.000
12	12.780	12.735	±0.015	6.000	6.000

American National Standard Taper Pipe Threads (NPT)

ANSI / ASME B1.20.1,
ASTM D 2464, ASTM F 1498

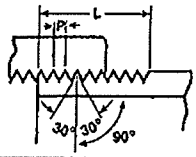

Nominal Size	Effective Thread Length (L)	Threads Per Inch	Pitch of Thread (P)
½	0.5337	14.0	.07143
¾	0.5457	14.0	.07143
1	0.6828	11.5	.08696
1¼	0.7068	11.5	.08696
1½	0.7235	11.5	.08696
2	0.7565	11.5	.08696
2½	1.1375	8.0	.12500
3	1.2000	8.0	.12500
4	1.3000	8.0	.12500

- S = SOCKET, SPG = SPIGOT, MPT = MALE PIPE THREAD, FPT = FEMALE PIPE THREAD
- ALL DIMENSIONS ARE IN INCHES.

TOLERANCES

S = (SOCKET LENGTH) MINIMUM
G = (LAYING LENGTH) INTERSECTION OF CENTER LINES TO BOTTOM OF SOCKET/THREAD, 90° ELBOWS, TEES, CROSSES, ± 1/32"
H = INTERSECTION OF CENTER LINES TO FACE OF FITTINGS; 90° ELBOWS, TEES, CROSSES, ± 1/32"
J = (LAYING LENGTH) INTERSECTION OF CENTER LINES TO BOTTOM OF SOCKET/THREAD; 45° ELBOWS, ± 1/32"
L = OVERALL LENGTH OF FITTINGS, (INCLUDING CAPS), ± 1/16"
M = OUTSIDE DIAMETER OF SOCKET/THREAD HUB, ± 1/16"
U = SOCKET/THREAD BOTTOM TO SOCKET/THREAD BOTTOM; COUPLINGS, ± 1/16"

- DIMENSIONS ARE SUBJECT TO CHANGE WITHOUT NOTIFICATION.

Tee
SxSxS

PVC PART NO. 8400

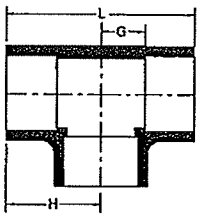

Size	Universal Part Number	L	H	G	Approx Wt. (Lbs.)
1/2	801-005	2 15/16	1 15/32	19/32	0.11
3/4	801-007	3 7/16	1 23/32	11/16	0.17
1	801-010	4	2	27/32	0.29
1 1/4	801-012	4 9/16	2 9/32	1	0.42
1 1/2	801-015	4 7/8	2 7/16	1 1/32	0.51
2	801-020	5 3/4	2 7/8	1 5/16	0.84
2 1/2	801-025	6 15/16	3 15/32	1 21/32	1.49
3	801-030	7 1/2	3 3/4	1 27/32	2.38
4	801-040	9 3/8	4 11/16	2 7/16	3.76
6	801-060	14 1/8	7 1/16	4 1/32	10.75
8	801-080	17 19/32	8 13/16	4 3/4	20.13

90 Degree Elbow
S x S

PVC PART NO. 8300

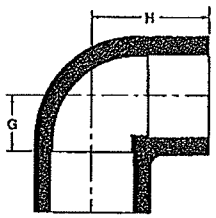

Size	Universal Part Number	H	G	Approx. Wt. (Lbs.)
1/2	806-005	1 15/32	19/32	0.08
3/4	806-007	1 11/16	11/16	0.13
1	806-010	2	27/32	0.19
1 1/4	806-012	2 9/32	1	0.32
1 1/2	806-015	2 7/16	1 1/32	0.42
2	806-020	2 27/32	1 5/16	0.63
2 1/2	806-025	3 7/16	1 21/32	1.13
3	806-030	3 3/4	1 27/32	1.60
4	806-040	4 11/16	2 7/16	2.85
6	806-060	6 11/16	3 11/16	8.27
8	806-080	8 19/32	4 19/32	15.46

90 Degree Elbow
S x FPT

PVC PART NO. 8301

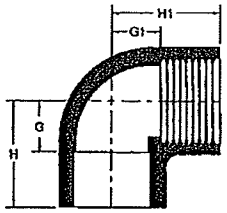

Size	Universal Part Number	H	G	H1	G1	Approx. Wt. (Lbs.)
1/2	807-005	1 3/8	1/2	1 13/32	22/32	.138
3/4	807-007	1 21/32	5/8	1 5/8	13/16	.173
1	807-010	1 27/32	23/32	1 25/32	27/32	.265
1 1/4	807-012	2 1/4	1 1/4	2	1	.434
1 1/2	807-015	2 3/8	1	2 1/8	1 1/16	.562
2	807-020	2 3/4	1 1/4	2 7/16	1 7/16	.802

90 Degree Elbow

FPT x FPT

PVC PART NO. 8302

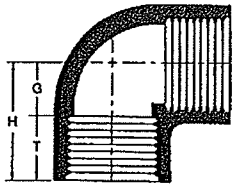

Size	Universal Part Number	T	G	H	Approx. Wt. (Lbs.)
1/2	808-005	3/4	21/32	1 13/32	0.11
3/4	808-007	25/32	27/32	1 5/8	0.18
1	808-010	31/32	3/4	1 23/32	0.26
1 1/4	808-012	1	31/32	1 31/32	0.42
1 1/2	808-015	1 1/16	1 5/32	2 7/32	0.54
2	808-020	1 3/32	1 13/32	2 1/2	0.82
3	808-030	1 5/8	1 15/16	3 9/16	2.30
4	808-040	1 11/16	2 1/2	4 9/16	3.62

45 Degree Elbow

S x S

PVC PART NO. 8309

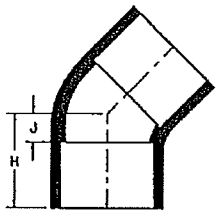

Size	Universal Part Number	H	J	Approx. Wt. (Lbs.)
1/2	817-005	1 5/32	1/4	0.07
3/4	817-007	1 11/32	5/16	0.10
1	817-010	1 15/32	5/16	0.16
1 1/4	817-012	1 11/16	13/32	0.22
1 1/2	817-015	1 7/8	1/2	0.30
2	817-020	2 5/32	21/32	0.48
2 1/2	817-025	2 1/2	23/32	0.83
3	817-030	2 11/16	25/32	1.16
4	817-040	3 9/16	1 9/32	2.21
6	817-060	5	2	5.50
8	817-080	6 1/4	2 1/4	10.42

Wye

SxSxS

PVC PART NO. 8600

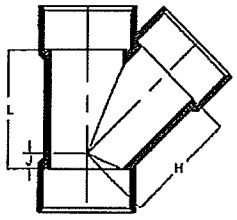

Size	Universal Part Number	L	J	H	Approx. Wt. (Lbs)
4**	875-040	6 3/16	13/16	5 3/8	4.42
6**	875-060	9 3/8	1 13/32	7 31/32	11.95

**Maximum pressure rating is 150 psi at 73°F.

Coupling

SxS

PVC PART NO. 8100

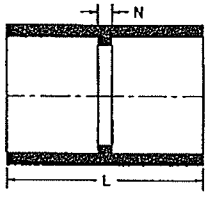

Size	Universal Part Number	L	N	Approx. Wt. (Lbs.)
1/2	829-005	1 15/16	1/8	0.05
3/4	829-007	2 3/16	1/8	0.08
1	829-010	2 7/16	1/8	0.12
1 1/4	829-012	2 11/16	1/8	0.17
1 1/2	829-015	2 15/16	1/8	0.23
2	829-020	3 3/16	1/8	0.33
2 1/2	829-025	3 3/4	3/16	0.57
3	829-030	4	3/16	0.84
4	829-040	4 3/4	3/16	1.35
6	829-060	6 9/32	1/4	3.46
8	829-080	8 1/4	1/4	6.61

Female Adapter
SxFPT

PVC PART NO. 8101

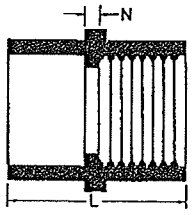

Size	Universal Part Number	L	N	Approx. Wt. (Lbs.)
1/2	835-005	1 25/32	3/32	0.07
3/4	835-007	1 15/16	3/32	0.10
1	835-010	2 9/32	3/32	0.16
1 1/4	835-012	2 3/8	1/8	0.22
1 1/2	835-015	2 9/16	1/8	0.27
2	835-020	2 23/32	3/32	0.39
2 1/2	835-025	3 19/32	7/32	0.73
3	835-030	3 3/4	7/32	0.96
4	835-040	4 1/4	1/4	1.52

Male Adapter
SxMPT

PVC PART NO. 8109

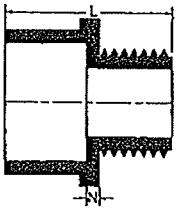

Size	Universal Part Number	L	N	Approx. Wt. (Lbs.)
1/2	836-005	1 13/16	3/16	0.05
3/4	836-007	2 3/8	1/4	0.06
1	836-010	2	3/16	0.10
1 1/4	836-012	2 1/2	1/4	0.15
1 1/2	836-015	2 5/8	1/4	0.19
2	836-020	2 7/8	9/32	0.27
2 1/2	836-025	3 11/16	11/32	0.50
3	836-030	3 7/8	3/8	0.73
4	836-040	4 1/2	7/16	1.40

Reducer Bushing, Flush Style

SPG x S

PVC PART NO. 8107

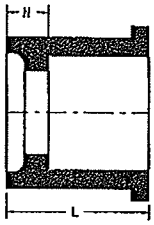

Size	Universal Part Number	L	H	Approx. Wt. (lbs.)
3/4 x 1/2	837-101	1 9/32	13/32	0.02
1 x 1/2	837-130	1 13/32	17/32	0.07
1 x 3/4	837-131	1 13/32	13/32	0.04
1 1/4 x 1/2	837-166	1 1/2	5/8	0.11
1 1/4 x 3/4	837-167	1 1/2	1/2	0.11
1 1/4 x 1	837-168	1 19/32	15/32	0.08
1 1/2 x 1/2	837-209	1 23/32	27/32	0.15
1 1/2 x 3/4	837-210	1 23/32	23/32	0.20
1 1/2 x 1	837-211	1 23/32	19/32	0.14
1 1/2 x 1 1/4	837-212	1 23/32	15/32	0.08
2 x 1/2	837-247	1 7/8	1	0.21
2 x 3/4	837-248	1 7/8	7/8	0.22
2 x 1	837-249	1 7/8	3/4	0.24
2 x 1 1/4	837-250	1 7/8	5/8	0.24
2 x 1 1/2	837-251	1 29/32	17/32	0.17
2 1/2 x 1	837-289	2 5/32	1	0.46
2 1/2 x 1 1/4	837-290	2 5/32	29/32	0.48
2 1/2 x 1 1/2	837-291	2 5/32	25/32	0.39
2 1/2 x 2	837-292	2 5/32	21/32	0.28
3 x 1	837-335	2 1/4	1 1/8	0.67
3 x 1 1/4	837-336	2 1/4	1	0.66
3 x 1 1/2	837-337	2 1/4	7/8	0.64
3 x 2	837-338	2 1/4	3/4	0.59
3 x 2 1/2	837-339	2 1/4	1/2	0.42
4 x 2	837-420	2 25/32	9/32	1.10
4 x 3	837-422	2 25/32	29/32	0.76
6 x 3	837-530	3 17/32	1 11/32	2.60
6 x 4	837-532	3 17/32	1 9/32	2.50
8 x 6	837-585	4 15/16	1 7/8	5.52

Union, with Viton® O-Ring Seal*
S

PVC PART NO. 8700

Union, with EPDM O-Ring Seal*
S

PVC PART NO. 8710

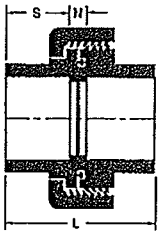

Size	Universal Part Number with Viton O-Ring Seal	Universal Part Number with EPDM O-Ring Seal	L	N	S	Approx. Wt. (Lbs.)
1/2	857-005	897-005	2 1/8	5/16	29/32	0.18
3/4	857-007	897-007	2 7/16	7/16	1	0.26
1	857-010	897-010	2 5/8	3/8	1 1/8	0.36
1 1/4	857-012	897-012	2 15/16	7/16	1 1/4	0.52
1 1/2	857-015	897-015	3 3/16	7/16	1 3/8	0.57
2	857-020	897-020	3 21/32	21/32	1 1/2	0.90
3	857-030	897-030	5 1/8	1 5/16	1 29/32	2.22

* THE MAXIMUM WORKING PRESSURE IS 235 PSI AT 73°F.

Union, with Viton® O-Ring Seal*
FPT

PVC PART NO. 8800

Union, with EPDM O-Ring Seal*
FPT

PVC PART NO. 8810

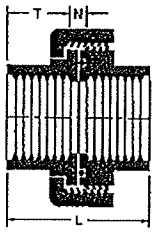

Size	Universal Part Number with Viton O-Ring Seal	Universal Part Number with EPDM O-Ring Seal	L	N	T	Approx. Wt. (Lbs.)
1/2	858-005	898-005	2 3/16	1/2	15/16	0.19
3/4	858-007	898-007	2 13/32	9/16	1 3/32	0.27
1	858-010	898-010	2 5/8	9/16	1 3/32	0.40
1 1/4	858-012	898-012	2 31/32	23/32	1 1/4	0.58
1 1/2	858-015	898-015	3 1/8	23/32	1 11/32	0.67
2**	858-020	898-020	3 5/8	27/32	1 19/32	1.03
3†	858-030	898-030	5 1/8	1 3/4	1 11/16	2.49

* THE MAXIMUM WORKING PRESSURE IS 235 PSI AT 73°F.
** THE MAXIMUM WORKING PRESSURE IS 200 PSI AT 73°F.
† THE MAXIMUM WORKING PRESSURE IS 185 PSI AT 73°F.

Technical Specification

Heavy Duty Gray PVC Cement

Description

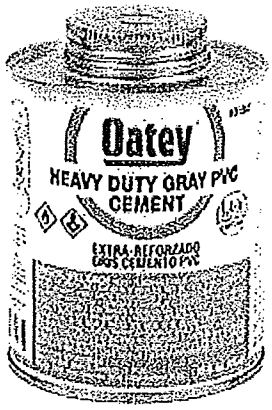

- Heavy-bodied grey cement for use on all schedules and classes PVC pipe and fitting up to 12" diameter with interference fit, up to 18" for non-pressure.
- Lo-V.O.C. Solvent Cement meets California South Coast Air Quality Management District (SCAQMD) 1168/316A or BAAQMD Method 40 and various environmental requirements.
- Thick formula fills gaps in large diameter pipe and loose fitting joints.
- Recommended for potable water, pressure pipe, conduit and DWV.
- Recommended application temperature 40°F to 110°F / 4°C to 43°C.
- Meets ASTM D2564.

Listings

NSF Standard 61 for PW, DWV and Sewer Waste

IAPMO Listed

Maximum VOC per SCAQMD 1168/316A or BAAQMD Method 40: 510 g/L

INGREDIENTS (CAS Number)
Acetone (67-64-1), Amorphous Silica (112945-52-5), Cyclohexanone (108-94-4), Methyl Ethyl Ketone (78-93-3), PVC Resin (9002-86-2), Tetrahydrofuran (109-99-9)

MSDS Number: 1102E

Product Number	Size	Qty	Wgt
31093	4 oz.	24	9 lbs.
31094	8 oz.	24	16 lbs.
31095	16 oz.	24	31 lbs.
311105	32 oz.	12	29 lbs.

Product Number	Size	Qty	Wgt
31118	Gallon	6	54 lbs.

Oatey Co.
4700 West 160 th St.
Cleveland, OH 44135

Phone: 1-800-321-9532
Phone: 1-800-321-9535
Visit www.oatey.com for Update

ISO 9001

Technical Specification

Heavy Duty Gray PVC Cement

CHEMICAL PROPERTIES		PHYSICAL PROPERTIES	
Appearance	Gray Liquid	Lap Shear Strength	(min. ASTM Standards)
Viscosity	Min. 1600 cps @73° F ± 2° F	2 hours	250 psi
Density	7.86 ± 0.2 lbs/gallon	16 hours	500 psi
Shelf Life	3 years from manufacture date	72 hours	900 psi
		Set Up Time	
		30° F to 50° F	4 – 5 minutes
		50° F to 70° F	2 – 3 minutes
		70° F to 90° F	1 – 2 minutes

Precautions

Read all information carefully before using this product.

DANGER!: CAUSES SERIOUS EYE IRRITATION. HARMFUL IF INHALED. MAY CAUSE DROWSINESS OR DIZZINESS. MAY CAUSE RESPIRATORY IRRITATION. REPEATED EXPOSURE MAY CAUSE SKIN DRYNESS OR CRACKING. Long term overexposure to solvents may cause damage to the brain, nervous system, reproductive system, respiratory system, mucous membranes, liver and kidneys. Contains a chemical classified by the US EPA as a suspected possible carcinogen. KEEP OUT OF REACH OF CHILDREN.

PRECAUTIONS: Avoid breathing vapors. Use only outdoors or in a well-ventilated area. Use explosion-proof electrical/ventilating equipment. Use only non-sparking tools. Take precautionary measures against static discharge. Wear a NIOSH-approved respirator for organic solvents. Keep away from heat/sparks/open flames/hot surfaces. No smoking. Vapors may accumulate in low places and may ignite explosively. Keep container tightly closed and cool. Wear protective gloves and eye protection. Wash thoroughly after handling. Do not eat or drink while using this product.

EMERGENCY/FIRST AID: CALL 1-877-740-5015 FOR INSTRUCTIONS.
IF SWALLOWED: Immediately call a POISON CENTER/doctor. Do NOT induce vomiting. Rinse mouth. This product may be aspirated into the lungs and cause chemical pneumonitis, a potentially fatal condition. If IN EYES: Rinse cautiously with water for several minutes. Remove contact lenses, if present and easy to do. Continue rinsing. If eye irritation persists, get medical attention. If ON SKIN: Rinse skin with water/shower. Take off immediately all contaminated clothing. If INHALED: Remove person to fresh air and keep comfortable for breathing. Call POISON CENTER/doctor if you feel unwell. If medical advice is needed, have product container or label at hand. FIRE: Use dry chemical, foam, or carbon dioxide extinguisher. Water spray may be applied to reduce potential vapors or for cooling. Burning liquid extinguished with water will _oat and may re-ignite on surface of water. SPILLS: Remove all sources of ignition and ventilate area. Personnel cleaning up the spill should wear appropriate personal protective equipment, including respirators if vapor concentrations are high. Soak up spill with absorbent material. Put absorbent material in covered, labeled metal containers. Dispose of contents/ container in accordance with local regulations. Store in a well-ventilated space. Store locked up.

Oatey®

Technical Specification

Heavy Duty Gray PVC Cement

Directions for Use

Store and use at temperatures between 40°F and 110°F. At temperatures outside of this range, special care must be taken to prepare good joints and prevent exposure to solvents. Stir or shake before using; if jelly-like, don't use. Do not thin.

1. Cut pipe ends square, chamfer and clean pipe ends.
2. Check dry fit of pipe and fitting. Pipe should easily go 1/3 of the way into the fitting. If pipe bottoms, it should be snug.
3. Use a suitable applicator at least 1/2 the size of the pipe diameter. For larger size pipe systems use a natural bristle brush or roller.
4. Clean pipe and fitting with a listed primer.
5. Apply liberal coat of cement to pipe to the depth of the socket, leave no uncoated surface.
6. Apply a thin coat of cement to inside of fitting, avoid puddling of cement. Puddling can cause weakening and premature failure of pipe or fitting. Apply a second coat of cement to the pipe.
7. Assemble parts QUICKLY. Cement must be fluid. If cement surface has dried, recoat both parts.
8. Push pipe FULLY into fitting using a ¼ turning motion until pipe bottoms.
9. Hold pipe and fitting together for 30 seconds to prevent pipe push-out - longer at low temperatures. Wipe off excess.
10. Allow 15 minutes for good handling strength and 2 hours cure time at temperatures above 60°F before pressure testing up to 180 psi. Longer cure times may be required at temperatures below 60°F or with pipe above 3".

DO NOT TEST WITH AIR.

Revision Date: 3/15/2013

Technical Specification

Clear Primer

Description

- Clear aggressive primer for use on PVC and CPVC pipe and fittings.
- Lo-V.O.C. Solvent Cement meets California South Coast Air Quality Management District (SCAQMD) 1168/316A or BAAQMD Method 40 and various environmental requirements.
- Removes surface dirt, grease and grime as well as softens the pipe surface to allow a fast, secure solvent weld.
- N SF Listed.
- Meets ASTM F656.

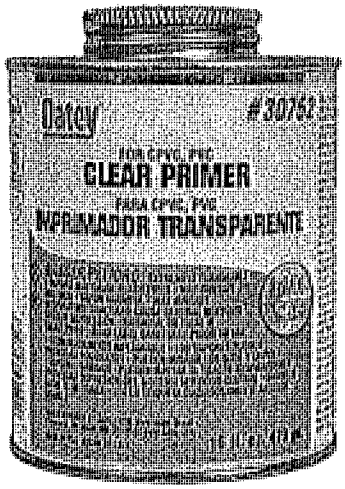

Listings

NSF Standard 61 for PW, DWV and Sewer Waste

IAPMO Listed

Maximum VOC per SCAQMD 1168/316A or BAAQMD Method 40: 550 g/L

INGREDIENTS (CAS Number)
Acetone (67-64-1), Cyclohexanone (108-94-4), Methyl Ethyl Ketone (78-93-3), Tetrahydrofuran (109-99-9)

MSDS Number: 1402E

Product Number	Size	Qty	Wgt	Product Number	Size	Qty	Wgt
30750	4 oz.	24	8 lbs.	30753	32 oz.	12	24 lbs.
30751	8 oz.	24	14 lbs.	30754	Gallon	6	46 lbs.
30752	16 oz.	24	25 lbs.				

Oatey Co.
4700 West 160 th St.
Cleveland, OH 44135

Phone: 1-800-321-9532
Phone: 1-800-321-9535
Visit www.oatey.com for Update

ISO 9001

Oatey®

Technical Specification

Clear Primer

CHEMICAL PROPERTIES	
Appearance	Clear Primer
Density	6.97 ± 0.2 lbs/gallon
Shelf Life	3 Years from Mfg. Date

Precautions

Read all information carefully before using this product.

DANGER!: CAUSES SERIOUS EYE IRRITATION. HARMFUL IF INHALED. MAY CAUSE DROWSINESS OR DIZZINESS. MAY CAUSE RESPIRATORY IRRITATION. REPEATED EXPOSURE MAY CAUSE SKIN DRYNESS OR CRACKING. Long term overexposure to solvents may cause damage to the brain, nervous system, reproductive system, respiratory system, mucous membranes, liver and kidneys. Contains a chemical classified by the US EPA as a suspected possible carcinogen. KEEP OUT OF REACH OF CHILDREN.

PRECAUTIONS: Avoid breathing vapors. Use only outdoors or in a well-ventilated area. Use explosion-proof electrical/ventilating equipment. Use only non-sparking tools. Take precautionary measures against static discharge. Wear a NIOSH-approved respirator for organic solvents. Keep away from heat/sparks/open flames/hot surfaces. No smoking. Vapors may accumulate in low places and may ignite explosively. Keep container tightly closed and cool. Wear protective gloves and eye protection. Wash thoroughly after handling. Do not eat or drink while using this product.

EMERGENCY/FIRST AID: CALL 1-877-740-5015 FOR INSTRUCTIONS.
IF SWALLOWED: Immediately call a POISON CENTER/doctor. Do NOT induce vomiting. Rinse mouth. This product may be aspirated into the lungs and cause chemical pneumonitis, a potentially fatal condition. If IN EYES: Rinse cautiously with water for several minutes. Remove contact lenses, if present and easy to do. Continue rinsing. If eye irritation persists, get medical attention. If ON SKIN: Rinse skin with water/shower. Take off immediately all contaminated clothing. If INHALED: Remove person to fresh air and keep comfortable for breathing. Call POISON CENTER/doctor if you feel unwell. If medical advice is needed, have product container or label at hand. FIRE: Use dry chemical, foam, or carbon dioxide extinguisher. Water spray may be applied to reduce potential vapors or for cooling. Burning liquid extinguished with water will _oat and may re-ignite on surface of water. SPILLS: Remove all sources of ignition and ventilate area. Personnel cleaning up the spill should wear appropriate personal protective equipment, including respirators if vapor concentrations are high. Soak up spill with absorbent material. Put absorbent material in covered, labeled metal containers. Dispose of contents/ container in accordance with local regulations. Store in a well-ventilated space. Store locked up.

Directions for Use

Oatey®

Technical Specification

Clear Primer

Store and use at temperatures between -15°F and 110°F. At temperatures outside of this range, special care must be taken to prepare good joints and prevent exposure to solvents. Stir or shake before using; if jelly-like, don't use. Do not thin.

1. Cut pipe ends square, chamfer and clean pipe ends.
2. Check dry fit of pipe and fitting. Pipe should easily go 1/3 of the way into the fitting. If pipe bottoms, it should be snug.
3. Use a suitable applicator at least 1/2 the size of the pipe diameter. For larger size pipe systems use a natural bristle brush or roller.
4. Apply thoroughly to inside of the fitting socket and to the outside surface of the pipe to the depth of the fitting. Apply a second coat of primer to fitting socket.
5. While primer is still wet use an appropriate solvent cement for the pipe being joined. Follow application instructions from cement can.

DO NOT TEST WITH AIR.

Revision Date: 3/15/2013

PolyPipe for POTABLE WATER

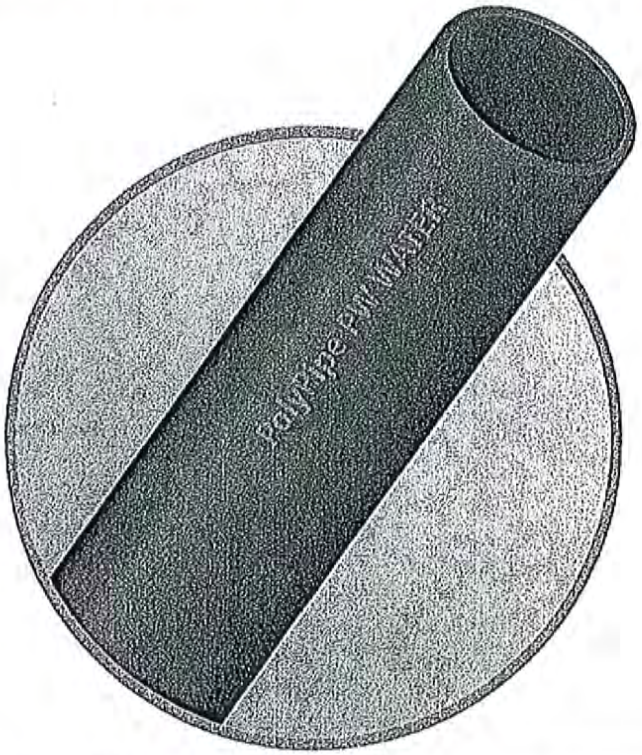

PW PE3408/PE4710
High Performance Pipe for Potable Water Service

FEATURES:

- Suitable applications include Potable Water, Reclaim Water, Intake Water, Raw Water and Waste Water
- Heat-fused, fully restrained, leak proof joints
- Maintains optimum flow rates due to resistance to corrosion & biological growth
- Fatigue resistant
- NSF-61 & NSF-14 certified
- Meets ASTM D3350 cell classification PE445574C
- Material grades PE3408/PE4710/PE100 per PPI TR-4
- AWWA C901 / ASTM D3035 & AWWA C906 / ASTM F714

SAMPLE PRINTLINE	12 " IPS - SDR 11 - DURALINE-POLYPIPE®PW - PE3408 - AWWA C906-PC160-PE4710-ASTM F714-200PSI - (Resin Code)(Color Code) - 1GA - (ddmmmyy) - NSF-61
APPLICATION	Potable Water Service & applications such as Mining, Landfill, Dredging, Water Reclamation or Wastewater
SIZE RANGE	½" – 65" IPS 3" – 30" DIPS
COLOR/STRIPE	Solid black, or with Stripes: blue, green, purple

PolyPipe is manufactured with high performance resins engineered with outstanding resistance to Slow Crack Growth (SCG) and Rapid Crack Propagation (RCP). The fatigue resistance of these resins improves design life in water systems where cyclic pressure surges exist.

Dura-Line is ISO 9001 certified and PolyPipe is qualified using exacting laboratory procedures and test methods, and a consistent uncompromised quest for design and manufacturing excellence.

PolyPipe for POTABLE WATER

PW PE3408/PE4710

TYPICAL PHYSICAL PROPERTIES

PROPERTY	ASTM TEST METHOD	*NOMINAL VALUES
Density, Natural	D1505	0.949 gm/cc
Density, Black	D1505	0.960 gm/cc
Melt Index (190°C/2.16 kg)	D1238	0.08 gm/10 min.
Flow Rate (190°C/21.6 kg)	D1238	7.5 gm/10 min.
Tensile Strength @ Yield	D638	3,500 psi
Ultimate Elongation	D638	>500%
Flexural Modulus	D790	150,000 psi
2% Secant		
Environmental Stress Crack Resistance (ESCR)		
$F_{0'}$ Condition C	D1693	--
PENT	F1473	>500 hrs.
Brittleness Temperature	D746	<-180°F
Hardness, Shore D	D2240	64
Vicat Softening Temperature	D1525	255°F
Izod Impact Strength (Notched)	D256	8 ft – lb/in
Volume Resistivity	D991	$>10^{15}$ ohm-cm
Thermal Expansion Coefficient		$1.0x10^{-4}$ in/in/°F
CELL CLASSIFICATION:	D3350	445574C
		445576C
PPI HYDROSTATIC DESIGN BASIS (HDB)	D2837	1,600 psi @ 73.4°F
(As listed in PPI TR-4)		1,000 psi @ 140°F
PPI HYDROSTATIC DESIGN STRESS (HDS)		1,000 psi @ 73.4°F
(As established by the Hydrostatic Stress Board (HSB) of the Plastics Pipe Institute (PPI))		

*Nominal values are intended to be guides only, and not as specification limit.

*Some of the data listed above was determined from compression molded test specimens; therefore, may deviate from pipe specimens.

PolyPipe PE4710 – Pipe Data and Pressure Ratings - IPS

OD Nominal	OD Actual		Dimension Ratio 7 335 psi	9 255 psi	11 200 psi	13.5 160 psi	15.5 140 psi	17 125 psi	21 100 psi	26 80 psi	32.5 65 psi
1/2	0.840	min wall (in)	0.120	0.093	0.076						
		weight (#/ft)	0.119	0.096	0.080						
3/4	1.050	min wall (in)	0.150	0.117	0.095						
		weight (#/ft)	0.185	0.150	0.126						
1	1.315	min wall (in)	0.188	0.146	0.120						
		weight (#/ft)	0.291	0.235	0.197						
1 1/4	1.660	min wall (in)	0.237	0.184	0.151	0.123					
		weight (#/ft)	0.463	0.374	0.314	0.261					
1 1/2	1.900	min wall (in)	0.271	0.211	0.173	0.141	0.123				
		weight (#/ft)	0.607	0.490	0.411	0.342	0.301				
2	2.375	min wall (in)	0.339	0.264	0.216	0.176	0.153	0.140			
		weight (#/ft)	0.948	0.766	0.642	0.534	0.470	0.431			
3	3.500	min wall (in)	0.500	0.389	0.318	0.259	0.226	0.206	0.167	0.135	
		weight (#/ft)	2.058	1.664	1.395	1.159	1.020	0.936	0.768	0.626	
4	4.500	min wall (in)	0.643	0.500	0.409	0.333	0.290	0.265	0.214	0.173	0.138
		weight (#/ft)	3.402	2.751	2.306	1.916	1.687	1.548	1.269	1.035	0.835
6	6.625	min wall (in)	0.946	0.736	0.602	0.491	0.427	0.390	0.315	0.255	0.204
		weight (#/ft)	7.374	5.963	4.997	4.152	3.656	3.355	2.750	2.244	1.811
8	8.625	min wall (in)	1.232	0.958	0.784	0.639	0.556	0.507	0.411	0.332	0.265
		weight (#/ft)	12.498	10.106	8.470	7.037	6.197	5.687	4.662	3.804	3.069
10	10.750	min wall (in)	1.536	1.194	0.977	0.796	0.694	0.632	0.512	0.413	0.331
		weight (#/ft)	19.416	15.700	13.157	10.932	9.626	8.834	7.242	5.909	4.767
12	12.750	min wall (in)	1.821	1.417	1.159	0.944	0.823	0.750	0.607	0.490	0.392
		weight (#/ft)	27.312	22.085	18.508	15.379	13.541	12.427	10.187	8.312	6.706
14	14.000	min wall (in)	2.000	1.556	1.273	1.037	0.903	0.824	0.667	0.538	0.431
		weight (#/ft)	32.930	26.628	22.315	18.542	16.327	14.983	12.282	10.022	8.086
16	16.000	min wall (in)	2.286	1.778	1.455	1.185	1.032	0.941	0.762	0.615	0.492
		weight (#/ft)	43.010	34.779	29.146	24.218	21.325	19.569	16.042	13.090	10.561
18	18.000	min wall (in)	2.571	2.000	1.636	1.333	1.161	1.059	0.857	0.692	0.554
		weight (#/ft)	54.435	44.017	36.888	30.651	26.989	24.767	20.304	16.567	13.366
20	20.000	min wall (in)	2.857	2.222	1.818	1.481	1.290	1.176	0.952	0.769	0.615
		weight (#/ft)	67.203	54.342	45.541	37.840	33.320	30.577	25.066	20.453	16.501
22	22.000	min wall (in)		2.444	2.000	1.630	1.419	1.294	1.048	0.846	0.677
		weight (#/ft)		65.754	55.105	45.787	40.317	36.998	30.330	24.748	19.967
24	24.000	min wall (in)		2.667	2.182	1.778	1.548	1.412	1.143	0.923	0.738
		weight (#/ft)		78.253	65.579	54.490	47.981	44.031	36.095	29.452	23.762
26	26.000	min wall (in)		2.889	2.364	1.926	1.677	1.529	1.238	1.000	0.800
		weight (#/ft)		91.838	76.964	63.950	56.311	51.675	42.362	34.565	27.887
28	28.000	min wall (in)		3.111	2.545	2.074	1.806	1.647	1.333	1.077	0.862
		weight (#/ft)		106.511	89.260	74.167	65.307	59.931	49.130	40.087	32.342
30	30.000	min wall (in)		3.333	2.727	2.222	1.935	1.765	1.429	1.154	0.923
		weight (#/ft)		122.270	102.467	85.141	74.970	68.798	56.399	46.019	37.128
32	32.000	min wall (in)		3.556	2.909	2.370	2.065	1.882	1.524	1.231	0.985
		weight (#/ft)		139.116	116.585	96.871	85.299	78.277	64.169	52.359	42.243
34	34.000	min wall (in)		3.778	3.091	2.519	2.194	2.000	1.619	1.308	1.046
		weight (#/ft)		157.049	131.613	109.358	96.295	88.367	72.441	59.108	47.689
36	36.000	min wall (in)		4.000	3.273	2.667	2.323	2.118	1.714	1.385	1.108
		weight (#/ft)		176.069	147.553	122.602	107.957	99.069	81.214	66.267	53.464
42	42.000	min wall (in)				3.111	2.710	2.471	2.000	1.615	1.292
		weight (#/ft)				166.876	146.941	134.844	110.542	90.197	72.771
48	48.000	min wall (in)						2.824	2.286	1.846	1.477
		weight (#/ft)						176.122	144.381	117.808	95.047
54	54.000	min wall (in)						3.176	2.571	2.077	1.662
		weight (#/ft)						222.905	182.732	149.100	120.294
63	63.000	min wall (in)						3.706	3.000	2.423	1.938
		weight (#/ft)						303.398	248.719	202.942	163.734
65	65.000	min wall (in)						3.824	3.095	2.500	2.000
		weight (#/ft)						322.967	264.761	216.032	174.295

PolyPipe PE4710 – Pipe Data and Pressure Ratings - DIPS

OD			Dimension Ratio								
Nominal	Actual		7	9	11	13.5	15.5	17	21	26	32.5
			335 psi	255 psi	200 psi	160 psi	140 psi	125 psi	100 psi	80 psi	65 psi
3	3.960	min wall (in)	0.566	0.440	0.360	0.293	0.255	0.233	0.189	0.152	0.122
		weight (#/ft)	2.635	2.130	1.785	1.483	1.306	1.199	0.983	0.802	0.647
		nom. ID (in)	2.76	3.03	3.20	3.34	3.42	3.47	3.56	3.64	3.70
4	4.800	min wall (in)	0.686	0.533	0.436	0.356	0.310	0.282	0.229	0.185	0.148
		weight (#/ft)	3.871	3.130	2.623	2.180	1.919	1.761	1.444	1.178	0.950
		nom. ID (in)	3.35	3.67	3.87	4.05	4.14	4.20	4.32	4.41	4.49
6	6.900	min wall (in)	0.986	0.767	0.627	0.511	0.445	0.406	0.329	0.265	0.212
		weight (#/ft)	7.999	6.468	5.421	4.504	3.966	3.639	2.984	2.434	1.964
		nom. ID (in)	4.81	5.27	5.57	5.82	5.96	6.04	6.20	6.34	6.45
8	9.050	min wall (in)	1.293	1.006	0.823	0.670	0.584	0.532	0.431	0.348	0.278
		weight (#/ft)	13.760	11.127	9.325	7.748	6.822	6.261	5.132	4.188	3.379
		nom. ID (in)	6.31	6.92	7.31	7.63	7.81	7.92	8.14	8.31	8.46
10	11.100	min wall (in)	1.586	1.233	1.009	0.822	0.716	0.653	0.529	0.427	0.342
		weight (#/ft)	20.700	16.739	14.028	11.656	10.263	9.418	7.721	6.300	5.083
		nom. ID (in)	7.74	8.49	8.96	9.36	9.58	9.72	9.98	10.19	10.38
12	13.200	min wall (in)	1.886	1.467	1.200	0.978	0.852	0.776	0.629	0.508	0.406
		weight (#/ft)	29.274	23.671	19.838	16.483	14.514	13.319	10.919	8.909	7.188
		nom. ID (in)	9.20	10.09	10.66	11.13	11.39	11.55	11.87	12.12	12.34
14	15.300	min wall (in)	2.186	1.700	1.391	1.133	0.987	0.900	0.729	0.588	0.471
		weight (#/ft)	39.329	31.802	26.652	22.145	19.500	17.894	14.669	11.969	9.657
		nom. ID (in)	10.67	11.70	12.35	12.90	13.21	13.39	13.76	14.05	14.30
16	17.400	min wall (in)	2.486	1.933	1.582	1.289	1.123	1.024	0.829	0.669	0.535
		weight (#/ft)	50.866	41.132	34.470	28.641	25.220	23.144	18.973	15.481	12.490
		nom. ID (in)	12.13	13.30	14.05	14.67	15.02	15.23	15.64	15.98	16.26
18	19.500	min wall (in)	2.786	2.167	1.773	1.444	1.258	1.147	0.929	0.750	0.600
		weight (#/ft)	63.885	51.659	43.292	35.972	31.675	29.067	23.829	19.443	15.687
		nom. ID (in)	13.59	14.91	15.74	16.44	16.83	17.07	17.53	17.91	18.23
20	21.600	min wall (in)	3.086	2.400	1.964	1.600	1.394	1.271	1.029	0.831	0.665
		weight (#/ft)	78.386	63.385	53.119	44.137	38.864	35.665	29.237	23.856	19.247
		nom. ID (in)	15.06	16.51	17.44	18.21	18.65	18.91	19.42	19.84	20.19
24	25.800	min wall (in)		2.867	2.345	1.911	1.665	1.518	1.229	0.992	0.794
		weight (#/ft)		90.431	75.785	62.970	55.448	50.883	41.713	34.035	27.460
		nom. ID (in)		19.72	20.83	21.75	22.27	22.58	23.20	23.70	24.12
30	32.000	min wall (in)			2.909	2.370	2.065	1.882	1.524	1.231	0.985
		weight (#/ft)			116.585	96.871	85.299	78.277	64.169	52.359	42.243
		nom. ID (in)			25.83	26.97	27.62	28.01	28.77	29.39	29.91

PolyPipe® Potable Water PE4710 Pipe is manufactured in accordance with the following standards:

- For sizes ½" IPS through 3" IPS products are manufactured in accordance with ASTM D3035 & AWWA C901.
- For sizes 4" IPS through 60" DIPS products are manufactured in accordance with ASTM F714 & AWWA C906.
- Metric sizes also available.
- Coiled pipe available through 6" OD and straight lengths available in 40' and 50' lengths.
- For custom lengths, contact a Customer Service Representative.

- Pressures are based on water at 23°C (73.4°F) and are determined by use of the Hydrostatic Design Stress (HDS) as established by the Hydrostatic Stress Board (HSB) of the Plastics Pipe Institute (PPI).
- The above weights for IPS and DIPS sizes are calculated in accordance with Plastics Pipe Institute (PPI) TR-7, using a value of 0.960 for density.
- Available with color-coded striping.

+GF+ GEORG FISCHER PIPING SYSTEMS

GEORG FISCHER CENTRAL PLASTICS

39605 Independence, Shawnee, OK, 74804 | 1.800.654.3872 | www.gfcp.com

PRODUCT SPECIFICATIONS SHEET

BUTT FUSION FITTINGS (IPS)
PE3408 / PE4710 HDPE
BLACK

SCOPE:

This document describes the standard specifications and features related to Georg Fischer Central Plastics' injection molded PE4710 (formerlyPE3408) Butt Fusion Fittings for pressure piping systems.

SIZES:

1/2" CTS through 2" CTS.	TEE, 90 DEGREE ELBOW, REDUCER, CAP,
1/2" IPS through 12" IPS.	TEE, 90 DEGREE ELBOW, 45 DEGREE ELBOW, REDUCER, CAP, PURGE FITTING,

REQUIREMENTS:

ASTM D2513	Specification for Thermoplastic Gas Pressure Pipe, Tubing, and Fittings
ASTM D3350	Specification for Polyethylene Plastic Pipes and Fittings Materials
ASTM D3261	Specification for Butt Heat Fusion Polyethylene (PE) Plastic Fittings for Polyethylene (PE) Plastics Pipe and Tubing

REFERENCE DOCUMENTS:

PPI TR-19	Thermoplastics Piping for the Transport of Chemicals
PPI TR-31	Underground Installation of Polyolefin Pipe
PPI TR-33	Generic Butt Fusion Procedure for Polyethylene Gas Pipe
ASTM D2657	Standard Practice for Heat Fusion Joining of Polyolefin Pipe and Fittings

CERTIFICATIONS/LISTINGS:

FM 1613	Approval Standard: Plastic Pipe and Fittings for Underground Fire Protection Service
AWWA C906	Standard for Polyethylene Pressure Pipe and Fittings, 4 in. Through 63 in., for Water Distribution
FM 1613	Approval Standard: Plastic Pipe and Fittings for Underground Fire Protection Service
ANSI/NSF 14	Plastic Piping System Components and Related Materials

MATERIALS:

PE Resin: Pre-blended black high density virgin resin. Recognized by the Plastic Pipe Institute as having a PE3408 / PE4710 / PE100 rating and a Hydrostatic Design Basis of 1600 psi @ 73°F. This resin has a cell classification of 445574C* in accordance with ASTM D3350.

Note* Previous editions of ASTM D3350 resulted in cell classifications of 345464C and 345564C.

TEST METHODS:

ASTM D1598 — Time-to-Failure of Plastic Pipe Under Constant Internal Pressure.
Must exceed 170 hours in 80°C bath @ 670psi Hoop Stress, or
Must exceed 1000 hours in 80°C bath @ 580psi Hoop Stress, or
Must exceed 1000 hours in 23°C bath @ 1600psi Hoop Stress.
(All methods are considered equivalent)

ASTM D1599 — Short-Term Hydraulic Pressure Failure of Plastics Pipe, Tubing, and Fittings.
Uniform pressurization until failure between 60 and 70 seconds from start of test. Most result in ductile failure at a pressure great enough to create a 2520psi Hoop Stress.

ASTM D2122 — Test Method for Determining Dimensions of Thermoplastic Pipe and Fittings
Determination of diameter, wall thickness, and length dimensions including procedures for dimensioning molded thermoplastic pipe fittings.

39605 Independence, Shawnee, OK, 74804 | 1.800.654.3872 | www.gfcp.com

FEATURES:
Made in USA from pre-blended virgin materials. These fittings are availabe in various configurations and DR and are primarily intended for use in pressure piping applications. These fittings are compatible for heat fusion to any PE material made from a like or similar resin. Select sizes can be supplied with AWWA or FM marking. Designed for use on pipe conforming to ASTM F714, D2513, and D3035.

PRESSURE RATING:
PE4710 Butt Fusion Fittings are pressure rated in accordance with industry and regulatory guidelines for natural gas or water @73°F. Pressure ratings are subject to change depending on ambient temperatures. Pressure ratings vary according to wall thickness and the design factor for the intended application, see below for ratings:

Fitting SDR	Pressure Rating (PSI) @ 73° F (23° C)			
	Water (.63 DSF)	Water (.5 DSF)	Natural Gas (.32 DSF) US	Natural Gas (.4 DSF) Canada
7	335	265	170*	215*
9	250	200	125*	160*
11	200	160	100	125
13.5	160	125	80	100
17	125	100	65	80
21	100	80	50	65
26	80	65	40	50
32.5	65	50	30	40

* Subject to maximum operating pressure limits of regulatory requirements.

Minimum wall thickness for plastic piping gas distribution systems is limited to .062".

Above listed pressure ratings based on 73°F ambient temperature. Pressure ratings subject to derating depending on temperature.

PRESSURE TESTING:
Pressure testing can be conducted in accordance with the recommendations of the pipe manufacturer, or as described in ASTM F2164 *STANDARD PRACTICE FOR FIELD LEAK TESTING OF POLYETHYLENE (PE) PRESSURE PIPING SYSTEMS USING HYDROSTATIC PRESSURE,* typically 1.5 x's the rated working pressure not exceeding 8 hours in duration for a single test.

MAXIMUM OPERATING TEMPERATURE:
The maximium operating temperature of PE4710 Butt Fusion Fittings is 140°F. Pressure de-rating factors should be considered when operating systems above the 73°F stated pressure rating, to maintain the 50 year substantiated long-term hydrostatic strength of the polyethylene material.

STORAGE/SHELF LIFE:
Black high density polyethylene resin contains a minimum of 2% of a finely dispersed concentration of carbon black which provides protection from UV effects. Even so, it is recommended that fittings which are stored for extended periods (two years or greater) be stored indoors in their original packaging. Fittings stored indoors in their original packaging have a virtually unlimited shelf-life.

CHEMICAL RESISTANCE:
Polyethylene generally exhibits strong resistance to many chemical compounds. Known chemical resistance characteristics at specified temperatures can be found in PPI Technical Report TR-19.

INSTALLATION:
These fittings are compatible for heat fusion by butt, socket, or electrofusion joining products. They can be heat fusion joined to pipe or fittings manufactured from like or similar resin. Qualified mechanical joining products can be used to join these fittings, consult the manufacturer for recommendations. Fusion jointing should only be attempted by persons who have been trained and have qualified joints through destructive testing.

Note: This Specification supercedes all previous Product Specifications and is subject to change without notice.

Approved By:

Jeff Wright
Director of Product Management

1101 McKinley Street
Anoka, MN 55303
Phone (763) 786-6682
Fax (763) 786-2167

Part Name: Male thread HDPE Transition Fitting
Series 710 Carbon Steel, T304, ~~T316~~, Stainless Steel

Threaded Transitions

The POLY-CAM Threaded Transition Adaptors is a multi-level mechanical transition fitting, protected under patent number 5,211,429, which is hydraulically compressed unto the polyethylene or pipe quality copolymer material.

Design

The relaxation creates a seal to prevent leakage. Under pressure, the internal pressure within the pipe increases the sealing surface area on the barb. Under zero internal pressure, the compression strain and tensional strain created by the compression of the multi-level barbs is greater then the stress created by relaxation and/or thero expansion and contraction. As the internal pressure increases the joining of the polyethylene or copolymer and the coupling increases.

Sizes range from .5" to 12" NPT. All National Pipe Threads are made to ANSI/ASME B1.20-1983 R 1992.

System Performance

The transition fitting is designed to handle the pressure rating of the HDPE pipe with a 2:1 safety factor at 73.40 degrees Fahrenheit with a minimum 50 year design life.

Quality Assurance

The transition fitting shall be manufactured by Poly-Cam, Inc. Poly-Cam, Inc. shall provide quality assurance with regards to proper installation, compatibility, performance, and acceptance. Transition joint meets or exceeds the requirements of ASTM D2513 Category 3. Upon request Poly-cam can install a stainless steel insert to meet ASTM 2513 Category 1. All Fittings meet ARRA requirements. Manufactured in the United States.

Installation

HDPE pipe end: Install transition fitting so as to comply with the pipe manufacturer's recommended procedures. All field welds shall be accomplished in accordance with Plastic Pipe Institute's welding procedure for butt fusion.

Threaded Fitting: When installing the transition fitting one should always use pipe joint sealant or Teflon tape. Always use strap wrenches. **Do not use pipe wrench. Always use 2 wrenches when connecting, Over tighten may cause ovality or damage. Always pressure test for leaks before backfilling.** Backfill and compact carefully around transition and service line to prevent ground shifts which could damage the valve and/or transition fitting.

Material

The POLY-CAM Threaded Transition is manufactured of ~~Carbon Steel (A53 or A106 grade)~~ Type 304 ~~or Type 316 (ASTM A249 or ASTM A269) and or ERW pipe (ASTM SA-312) and~~ incorporated with the transition manufactured of HDPE (cell class 345454c) or pipe quality Copolymer material. (pe3408, pe3608 and pe4710). All pipe meets ASTM 3035 and ASTM 714. It complies AWWA C-901, C906 and NSF 61. All certification will be submitted upon request.

The **epoxy coating** (IF 194T Red Iron Oxide) is fusion bonded to the metal. It has approvals NSF 61, FDA 175.300, AWWA C116-01,C213-01, UL 262 and FM 1120/1130
The carbon steel epoxy POLY-CAM threaded transition fitting complies with AWWA and NSF 61 material requirements.

Warranty

Warranty period is one year after date of substantial completion of installation.

Series 710
Transition with
Male NPT

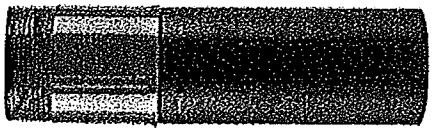

POLY-CAM Male Threaded Transition Adaptors (710 Series) is a multi-level mechanical transition fitting, patent number 5,211,429. The POLY-CAM Threaded Transition is manufactured to the following;

- **Carbon Steel Epoxy Coated, 304 and 316 Stainless Steel**
- **Other steel materials can be made depending on availability.**
- **Sizes range from .5 to 12" NPT**
- **Meets ANSI/ASME B1.20-1983 R 1992**
- **All materials comply with AWWA and NSF 61 Meets ASTM 2513 Category 3. Upon request Poly-cam can install a stainless steel insert to meet ASTM 2513 Category 1**

SDR 7 | SDR 9 | SDR 11 | SDR 17

NOMINAL SIZE INCHES	COUPLING O.D. "A"	PRESSED SDR7 PE PIPE I.D. "B"	EXPOSED SDR7 PE PIPE I.D. "C"	EXPOSED PE PIPE O.D. "D"	COUPLING LENGTH "E"	EXPOSED PE PIPE LENGTH "F"	OVERALL LENGTH "G"	THREAD LENGTH "H"
0.5	1.000			0.840	1.6	6.4	8	0.64
0.75	1.250	~0.70	0.75	1.050	1.8	6.2	8	0.7
1	1.315	~0.72	0.94	0.315	2	6	8	0.99
1.25	1.660	~0.90	1.18	1.660	2.6	5.4	8	1.01
1.5	1.900	~1.10	1.35	19.000	2.6	5.4	8	1.03
2	2.375	~1.44	1.69	2.375	3	5	8	1.06
2.5	2.875			2.875	3.5	4.5	8	1.25
3	3.500	~2.08	2.49	3.500	4	4	8	1.26
4	4.500	~2.79	3.19	4.500	4	8	12	1.48
5	5.563	~3.4	3.95	5.563	5	7	12	1.5
6	6.625	~4.2	4.7	6.625	5	8	13	1.56
8	8.625	~5.5	6.12	8.625	7	8	15	1.75
10	10.750	~6.9	7.63	10.750	8	8	16	1.85
12	12.750	~8.2	9.05	12.750	9	9	18	2.27

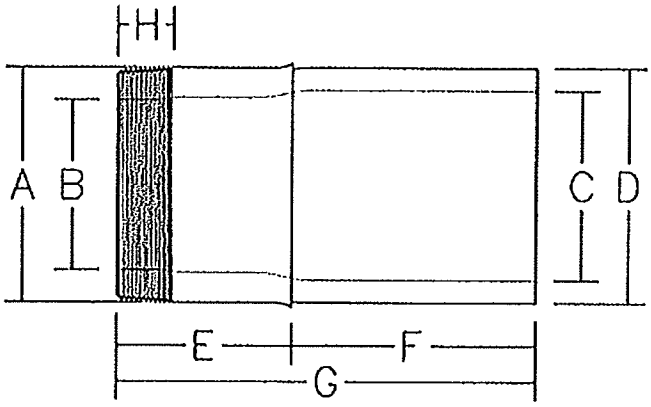

11/00 ® Registered Trademark Poly-Cam, Inc. - US Patent # 5,211,429

FNW™

FULL PORT TRUE-UNION BALL VALVE

Figure 340N - PVC with NPT and SW Ends*

Figure 340NF - PVC with 150# Flanges

Figure 350N - CPVC with NPT and SW Ends*

SW only on sizes over 2". NPT is available upon request.

Valve Features

- Full Port Design
- Pressure Rating: 150 PSI
- Temperature Range:
  - PVC: 41°F to 122°F (5°C to 50°C)
  - CPVC: 32°F to 194°F (0°C to 90°C)
- Certified to NSF 61 Annex G
- ~~EPDM~~ or FPM (Viton®) Seals
- O-ring Energized Seats (up to 2")
- Bidirectional Flow *
- Adjustable Seat Tightness
- Easy Disassembly with Handle
- Easy Replacement Reduces Down Time
- Can Be Modified for Actuator Installation

* Note that the valve has a preferred flow direction indicated by the embossed arrow on the body. The preferred flow direction orients the carrier upstream so that downstream piping can be removed with valve closed.

Standards

Figure 340N Connections:
- Threaded: ASTM D-2464, ref. ANSI B1.20.1
- Socket: ASTM D-2467

Figure 340NF Connections:
- Flanged: ANSI B16.5, Class 150

Figure 350N Connections:
- Threaded: ASTM F437
- Socket: ASTM F439

Materials:
- PVC: Cell Classification 12454 per ASTM D1784 (formerly Type I, Grade 1)
- CPVC: Cell Classification 23447 per ASTM D1784 (formerly Type IV, Grade 1)



Options

FNW offers many options and modifications for valves. These include, but are not limited to: Actuation including chain wheels, worm gear operators, pneumatic and electric operators, control accessories, stem extensions, and custom mounting hardware. Contact FNW with your specific application needs.

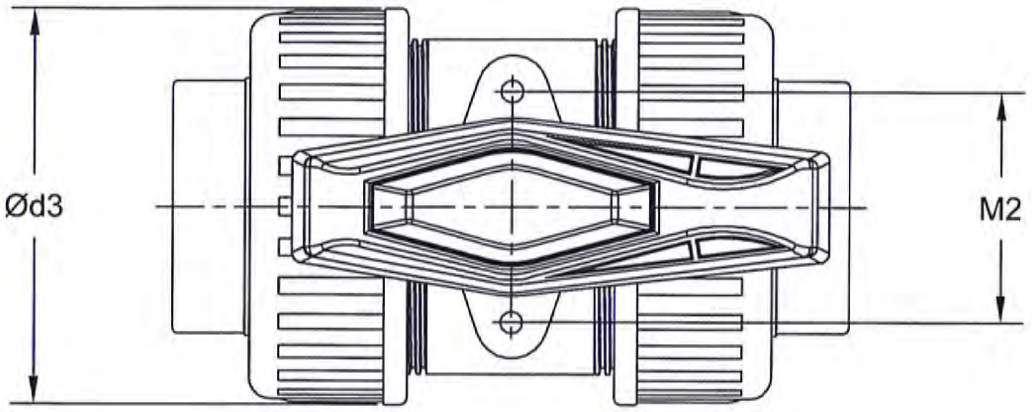

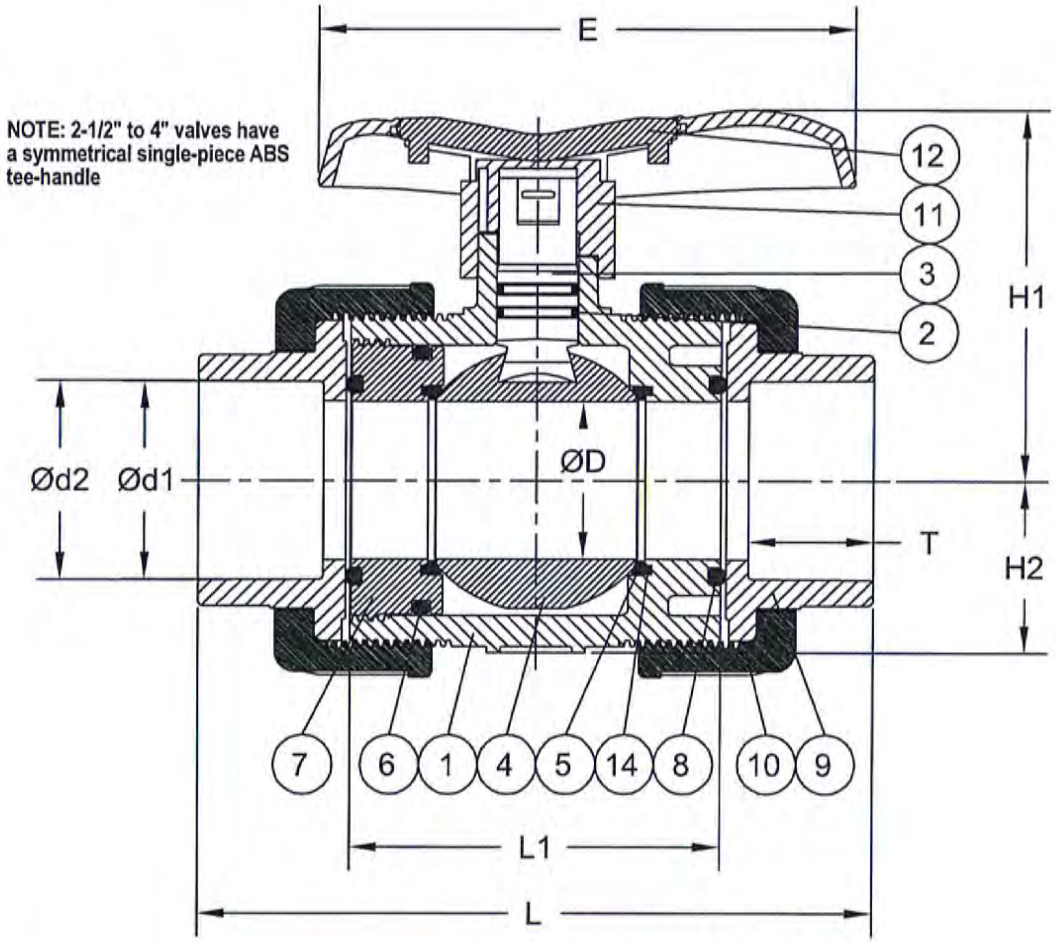

Dimensions (inches) Figure 340N and 350N

Size	ØD	E	L	L1	Ød1	Ød2	Ød3	T	H1	H2	M2
1/2	0.512	3.03	4.49	2.36	0.84	0.85	1.82	0.87	1.81	0.83	1.18
3/4	0.709	3.74	5.31	2.87	1.05	1.06	2.19	1.00	2.24	1.02	1.30
1	0.906	4.33	5.87	3.11	1.31	1.32	2.62	1.13	2.76	1.30	1.57
1-1/4	1.181	5.00	6.69	3.46	1.66	1.67	3.23	1.25	2.95	1.54	1.85
1-1/2	1.496	5.63	6.93	3.74	1.89	1.91	3.88	1.38	3.70	1.61	2.05
2	1.890	6.46	8.15	4.49	2.37	2.39	4.72	1.50	4.45	2.09	2.76
2-1/2	2.402	7.09	10.83	5.35	2.87	2.89	5.51	1.75	4.57	*	*
3	2.717	8.82	11.97	6.22	3.49	3.52	6.30	1.88	5.12	*	*
4	3.898	10.94	13.07	6.93	4.49	4.52	8.86	2.25	7.01	*	*

* 2-1/2" to 4" valves do not have bosses for mounting pad. Saddle mounts, sold separately, are available for actuation purposes.

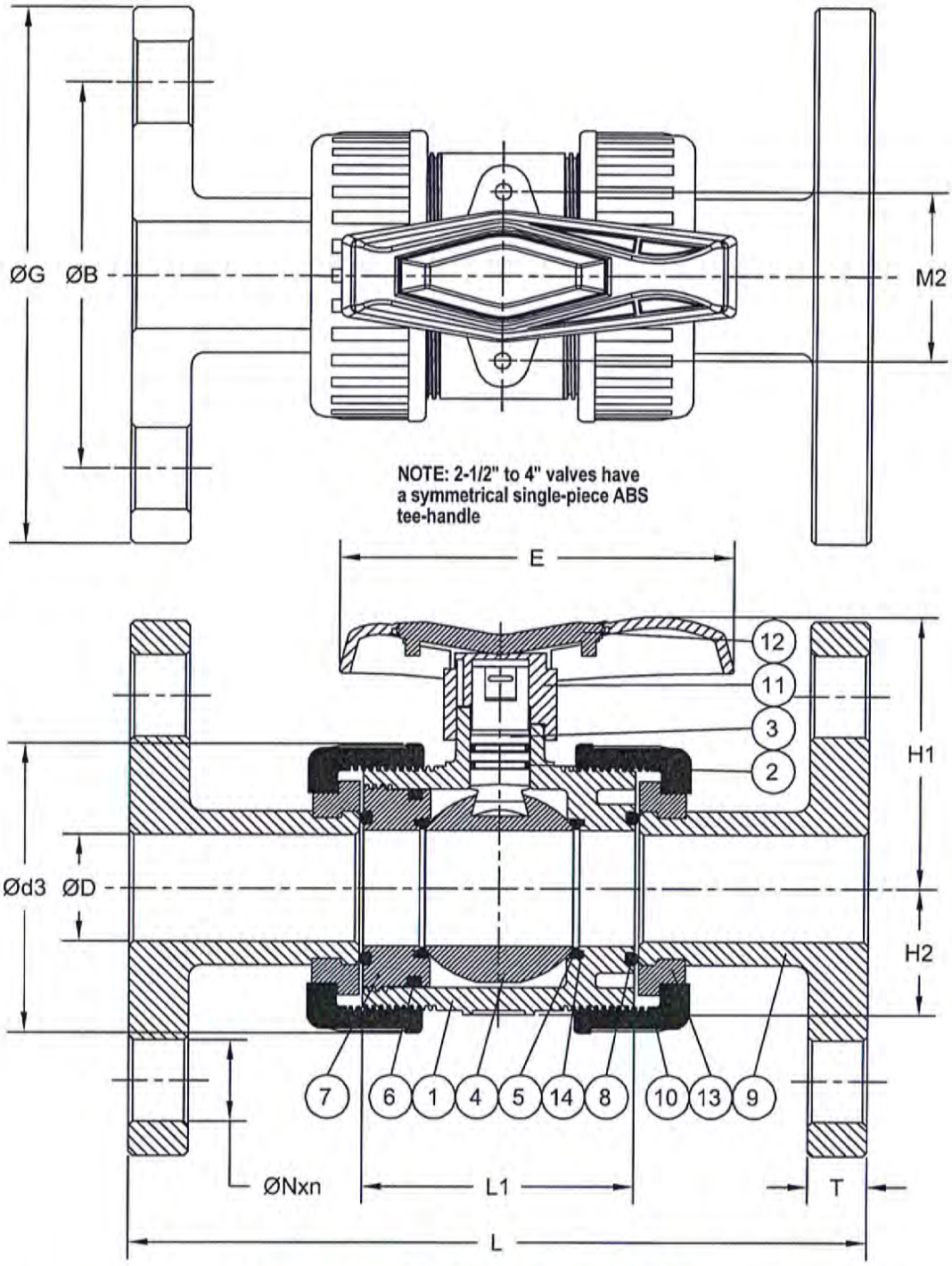

Dimensions (inches) Figure 340NF

Size	ØD	E	L	L1	Ød1	Ød2	Ød3	T	H1	H2	M2	ØN	n
1/2	0.512	3.03	5.63	2.36	2.40	3.50	1.82	0.51	1.81	0.83	1.18	0.63	4
3/4	0.709	3.74	6.77	2.87	2.76	3.86	2.19	0.55	2.24	1.02	1.30	0.63	4
1	0.906	4.33	7.36	3.11	3.11	4.25	2.62	0.55	2.76	1.30	1.57	0.63	4
1-1/4	1.181	5.00	7.48	3.46	3.50	4.61	3.23	0.63	2.95	1.54	1.85	0.63	4
1-1/2	1.496	5.63	8.35	3.74	3.90	5.00	3.88	0.63	3.70	1.61	2.05	0.63	4
2	1.890	6.46	9.21	4.49	4.76	5.98	4.72	0.63	4.45	2.09	2.76	0.75	4
2-1/2	2.402	7.09	10.20	5.35	5.51	7.01	5.51	0.71	4.57	*	*	0.75	4
3	2.717	8.82	11.97	6.22	5.98	7.52	6.30	0.71	5.12	*	*	0.75	4
4	3.898	10.94	14.65	6.93	7.52	9.02	8.86	0.71	7.01	*	*	0.75	8

* 2-1/2" to 4" valves do not have bosses for mounting pad. Saddle mounts, sold separately, are available for actuation purposes.

About PVC

Unplasticised Polyvinyl Chloride, or PVC, is the most widely used of all plastics and commonly used for pressure pipes, fittings, and valves. It is rigid, suitable for above and below ground applications. PVC has good chemical resistance and is odorless and tasteless. It is for use with liquids and gasses with temperatures +32°F to +140°F* (for higher temperatures see CPVC) at a wide range of operating pressures. Some poorer quality PVC can leach chemicals into water which can build up in recirculation systems, however most modern pipe is built to specific standards (e.g. BS3505/6, ASTM D 1785, ASTM D2241, DIN 8061/2, KIWA 49, BS4346 PART 1, DIN 8063) to control this. ASTM D1784 controls the compounds for rigid PVC and CPVC.

About CPVC

Chlorinated Polyvinyl Chloride, or CPVC, has been offering the process industry superior corrosion resistance, mechanical strength, and excellent life-cycle economics in a single package. Conceptually, CPVC is a PVC homopolymer that has been subjected to a chlorination reaction. It is generally inert to most mineral acids, bases, salts, and paraffinic hydrocarbon solutions. CPVC is not recommended for use with chlorinated or aromatic hydrocarbons, esters, or ketones. The upper temperature limit on CPVC is 200°F*. There is no lower temperature limit on CPVC and the material will withstand pressure. However, at very cold temperatures, the material will become brittle and the impact strength will decline.

*** Note: Other materials within valves besides PVC and CPVC can have an affect on the temperature limits of the valve. Temperatures noted above are for the thermoplastic material alone.**

Standard Materials

Ref. No.	Description	Material				Qty
		340N & 340NF		350N		
		EPDM Seals	Viton Seals	EPDM Seals	Viton Seals	
1	Body	PVC		CPVC		1
2	Stem O-ring	EPDM	FPM (Viton®)	EPDM	FPM (Viton®)	2
3	Stem	PVC		CPVC		1
4	Ball	PVC		CPVC		1
5	Seat	PTFE				2
6	Carrier O-ring	EPDM	FPM (Viton®)	EPDM	FPM (Viton®)	1
7	Carrier	PVC		CPVC		1
8	Union O-ring	EPDM	FPM (Viton®)	EPDM	FPM (Viton®)	2
9	End Connector/ Flange	PVC		CPVC		2
10	Union Nut	PVC		CPVC		2
11	Handle	ABS				1
12	Handle Insert	ABS				1
13	Set Ring (340F only)	PVC		CPVC		2
14	Seat O-ring (up to 2" only)	EPDM	FPM (Viton®)	EPDM	FPM (Viton®)	2

Pressure/Temperature

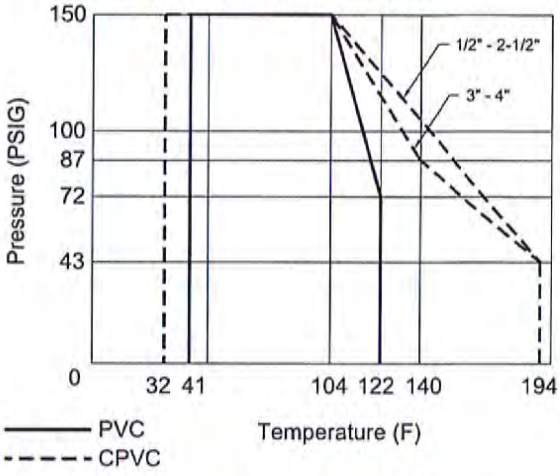

Torques, Cv & Weights

Size	Torque (in-lbs)	Cv	Wt. (Lbs.)
1/2	18	12.5	0.48
3/4	27	28	0.73
1	36	50.9	0.99
1-1/4	54	81	1.39
1-1/2	71	150	2.27
2	106	230	3.41
2-1/2	178	360	7.13
3	230	485	11.97
4	371	768	11.97

Figure Number Matrix

F N W **340N** E G

BODY TYPE

340N = PVC w/ NPT & SW ends to 2" (SW only over 2", NPT upon request)
340NF = PVC w/ FLANGED ENDS
350N = CPVC w/ NPT & SW ends to 2" (SW only over 2", NPT upon request)

SEALS

E = EPDM
V = FPM (VITON®)

SIZE CODES

1/2 = D
3/4 = F
1 = G
1-1/4 = H
1-1/2 = J
2 = K
2-1/2 = L
3 = M
4 = P

PLAST-O-MATIC PRODUCT DATA

CATALOG CKL
(Series CKM & CK)

Self-Closing Thermoplastic Check Valves...

Patented Diaphragm Design Assures Dependable, Repetitive, Bubble-Tight Sealing... and They Can Be Mounted in Any Position!

Sizes: 1/2", 3/4" and 1"

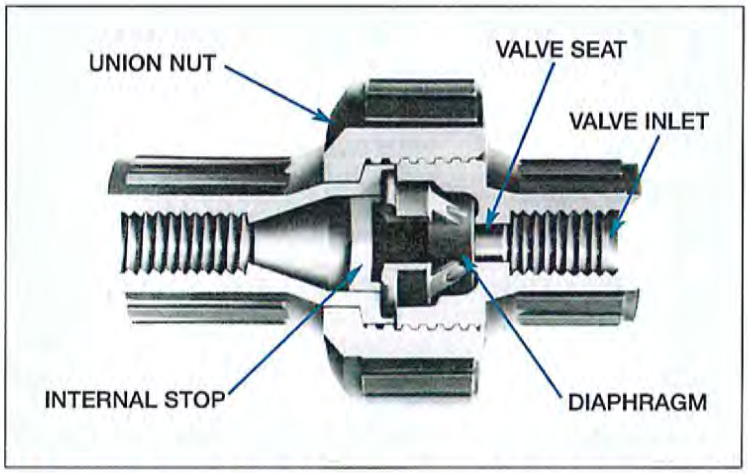

Features/Benefits:

- **Patented Design:** Self-sealing - are not dependent upon gravity, mounting position or reverse flow, a significant improvement over ball check valves.
- **Silent Operation:** No internal sliding or loose parts to slam or vibrate - chattering is eliminated!
- **Dependability:** Leak-free sealing protects against the potential hazards created by reverse flow of corrosive liquids such as acids, caustics and chlorine solutions.
- **Repetitive Long Term Sealing:** Diaphragm automatically positions itself against seat in the identical location. Superior to ball check valves which often leak at lower pressures.
- **Convenience:** Union nut on Series CKM simplifies valve inspection/removal with minimum piping breakdown.
- **Minimal Cracking Pressure:** Diaphragm begins to open at approximately 1.0 to 1.5 PSI.
- **Cost Efficient:** Designed to improve system performance and competitively priced.

Materials of Construction:

Plast-O-Matic Series CKM Check Valves are molded of Type 1, Grade 1, PVC (Polyvinyl Chloride), Glass-filled Polypropylene, Corzan® CPVC, and Kynar® PVDF in sizes 1/2", 3/4" and 1". A machined version, Series CK is available in PTFE in sizes 3/4" and 1". Diaphragms are of EPDM or FKM (Viton®). Threaded connections are standard on all models. Socket end connectors are available on all Series CKM models.

Note: For information on 1½", 2" and 3" models, refer to Catalog CKS.

PLAST-O-MATIC VALVES, INC.
1384 Pompton Avenue, Cedar Grove, New Jersey 07009
(973) 256-3000 • Fax: (973) 256-4745 • www.plastomatic.com

Series ~~CKM &~~ CK Diaphragm Check Valves 1/2", 3/4" & 1"

Design

Series CKM & CK Check Valves, normally closed in design, feature a patented diaphragm seal that will neither stick nor chatter and is automatic in action. The valves are not dependent upon gravity so they can be mounted in any position. Even in the absence of reverse flow or pressure, the diaphragm will automatically reposition itself to seal against the valve seat. This is achieved with or without the presence of reverse flow. The unique and patented diaphragm will seal in the identical location every time producing a more reliable and repetitive seal.

The molded Series CKM models have only one moving part – the diaphragm. This provides both design simplicity and maximum operating dependability.



Operation

Flow entering the valve inlet will open the valve by pushing the diaphragm off the valve seat until it comes to rest on the internal stop. This supports the diaphragm and eliminates force or stress under high flow condition. In this position both the diaphragm and valve seat are kept clean by the flushing action of the internal flow, keeping the entire sealing area free of particles which could cause leakage.

If the inlet flow is either stopped, or if a backflow of a higher pressure is sensed, the diaphragm will automatically reposition itself, closing off the valve seat. Reverse flow or pressure is not required to close the valve when the inlet flow stops. If reverse pressure is present it simply creates a tighter seal.

Series CKM – Flow vs. Pressure Drop Performance Curves

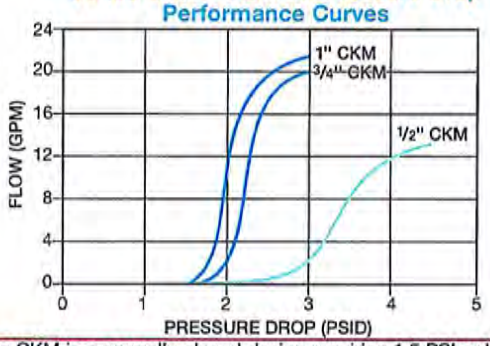

Series CKM is a normally-closed design requiring 1.5 PSI or less to open

Installation

Because of its normally closed design the Plast-O-Matic CKM and CK Check Valves can be installed in any position; concern over the valve seat closing due to gravity (as with ball check designs) is of no consequence. Caution should be exercised to make certain that the direction of flow is correct. Threaded connections should never be made to metal piping and should always be wrapped with PTFE or other acceptable pipe sealant to effect a seal. The assembly need only be made hand tight followed by a one-quarter turn more with a strap wrench. *DO NOT* overtighten and *DO NOT* use a pipe wrench as a future valve fracture could result.

Dimensions and Material Availability

Series CKM – Molded Models: PVC, CPVC, GPP & PVDF

Pipe Size (NPT)	A		B		C	
	in.	mm	in.	mm	in.	mm
1/2"	3.8	97	1.3	33	2.4	62
3/4"	4.1	105	1.6	39	2.8	72
1"	4.7	120	1.9	48	2.8	72

Series CK – Machined Models: PTFE

3/4"	3.6	92	1.9	48	3.0	76
1"	4.3	110	1.9	48	3.0	76

Series CKM

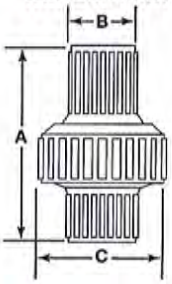

Series CK

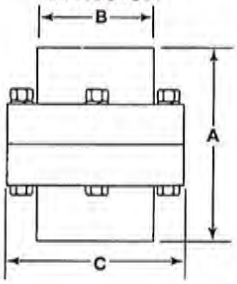

Pressure Temperature Ratings

Series CKM – Molded Models: PVC, CPVC, GPP & PVDF

Valve Body Material	Valve Diaphragm Material	Maximum Working Pressure							
		77°F (25°C)		140°F (60°C)		180°F (82°C)		280°F (138°C)	
		Inlet	Back	Inlet	Back	Inlet	Back	Inlet	Back
PVC	EPDM	150	100	150	100	NR	NR	NR	NR
	FKM	150	100	150	100	NR	NR	NR	NR
GPP 20% Glass Filled	EPDM	100	100	100	100	100	100	NR	NR
	FKM	100	100	100	100	100	100	NR	NR
PVDF	EPDM	150	100	150	100	150	100	NR	NR
	FKM	150	100	150	100	150	100	60	60
CPVC	EPDM	150	100	150	100	150	100	NR	NR
	FKM	150	100	150	100	150	100	NR	NR

Series CK – Machined PTFE Models

PTFE	EPDM	40	40	40	40	40	40	5	5
	FKM	40	40	40	40	40	40	5	5

Ordering Information For Series CKM & CK

Pipe Size	CKM - PVC FKM Seals	CKM - PP FKM Seals	CKM-PF FKM Seals	CKM-CPVC FKM Seals	CK-TF FKM Seals
1/2"	CKM050V-PV	CKM050V-PP	CKM050V-PF	CKM050V-CP	N.A.
3/4"	CKM075V-PV	CKM075V-PP	CKM075V-PF	CKM075V-CP	CK075V-TF
1"	CKM100V-PV	CKM100V-PP	CKM100V-PF	CKM100V-CP	CK100V-TF

Note: Threads are standard. For socket ends add "S" after seal material. (ex. CKM050VS-PV). For other body materials consult factory. Above shown with FKM (Viton®) Seals. For EPDM seals change "V" to "EP". N.A. = Not Available.

AUTHORIZED PLAST-O-MATIC DISTRIBUTOR

PLAST-O-MATIC VALVES, INC.
1384 Pompton Ave., Cedar Grove, NJ 07009 • (973) 256-3000 • Fax: (973) 256-4745 • www.plastomatic.com
5/06

Figure LFG
GAUGES & THERMOMETERS

FNW™

2-1/2" LIQUID FILLED GAUGE

Liquid-filled pressure gauges provide users with a number of advantages in certain measurement applications. They are ideally suited for uses on equipment where excessive vibration and pulsation are encountered, such as pumps, compressors, and machine tools.

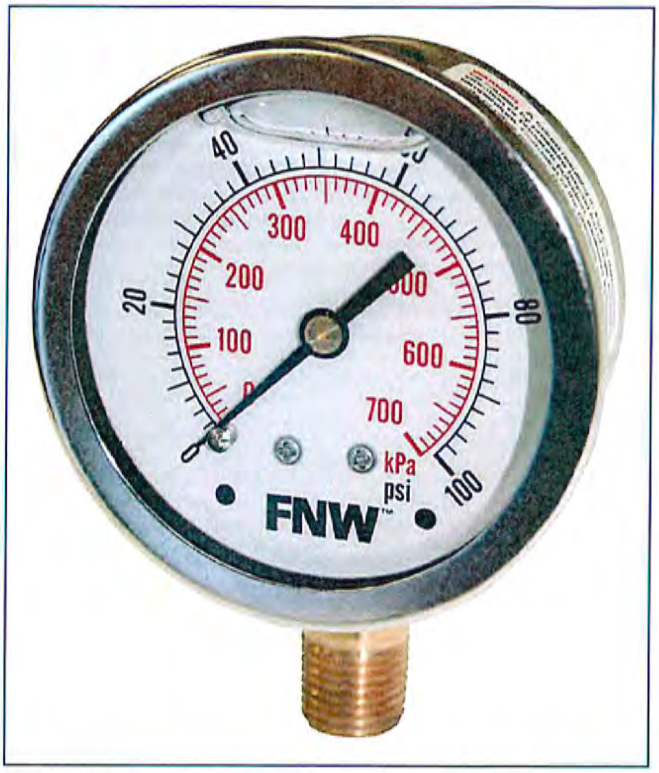

Features:

- Dual Scale (PSI and kPa)
- +/- 1.5% of Full Scale Accuracy
- 304SS Case and Crimp-On Bezel Ring
- Glycerin Filled
- Phosphor Bronze C-Shaped Bourdon Tube
- 1/4" OT 58 Brass MNPT Connection
- OT 59 Brass Movement
- Black Anodized Aluminum Pointer
- White Aluminum Dial with Black and Red Markings
- Tin/Copper Alloy Welding
- Polycarbonate Lens
- Buna N Socket Gasket and Fill Plug
- Silicone Gasket at Lens (Non-wetted Part)
- 75% of Full Scale Working Pressure
- 25% Over-Pressure Limit
- -4°F to 150°F (-20°C to 65°C) Process and Ambient Temperature Limit
- IP65 Enclosure Rating

Dial Resolution

Range (PSI)	PSI Per Mark
0 to 30	0.5
0 to 60	1
0 to 100	2
0 to 160, 200, 300	5

Part Numbers

Range (PSI)	Part Number
0 to 30	FNWLFG030L
0 to 60	FNWLFG060L
0 to 100	FNWLFG0100L
0 to 160	FNWLFG0160L
0 to 200	FNWLFG0200L
0 to 300	FNWLFG0300L

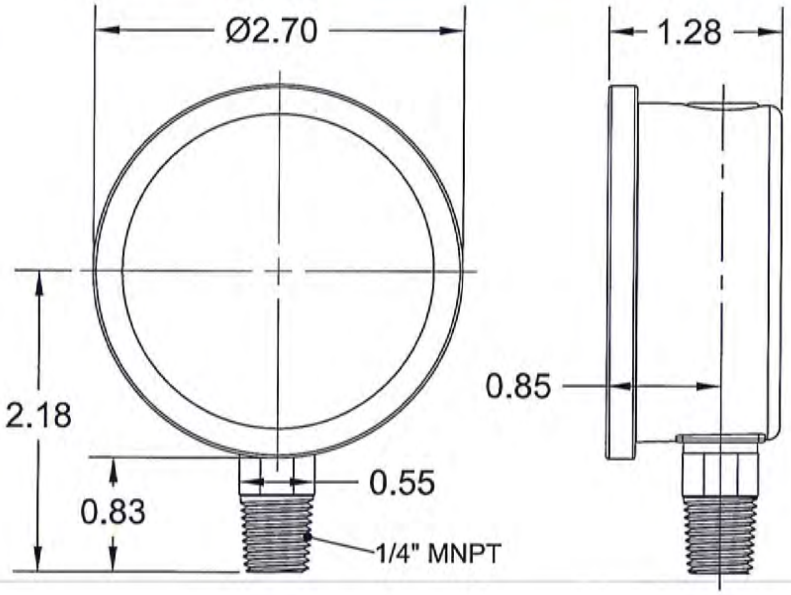

DOC: FNWLFG09 Ver. 12/2012

© 2012 - FNW. All rights reserved.
The FNW logo is a trademark of Ferguson Enterprises, Inc., PL Sourcing, PO Box 2778, Newport News, VA 23609

www.fnw.com

The contents of this publication are presented for information purposes only, and while effort has been made to ensure their accuracy, they are not to be construed as warranties or guarantees, expressed or implied, regarding the products or services described herein or their use or applicability. All sales are governed by our terms and conditions, which are available on request. We reserve the right to modify or improve the designs or specifications of our products at any time without notice. Always verify that you have the most recent product specifications or other documentation prior to the installation of these products.

APPENDIX U

EPA CORRESPONDENCE

APPENDIX U1

Curb Additions for Area A

UNITED STATES ENVIRONMENTAL PROTECTION AGENCY
REGION 4
ATLANTA FEDERAL CENTER
61 FORSYTH STREET
ATLANTA, GEORGIA 30303-8960

July 25, 2016

Ms. E. Gayle Macolly
Manager, Remedial Projects
Solutia, Inc.
702 Clydesdale Avenue
Anniston, Alabama 36201-5328

RE: Operable Unit 3 Design Change
- Curb Additions for Area A
Anniston PCB Site, Anniston, Alabama

EPA CERCLA ID # ALD000400123
EPA RCRA ID # ALD004019048

Dear Ms. Macolly:

The U.S. Environmental Protection Agency has reviewed the change to the design of the cover system for Area A in operable unit 3 of the Anniston PCB Site. This change was provided by email from you on July 20, 2016. The purpose of this letter is to document that the EPA agrees that the change is appropriate based to prevent damage to the liner. The changes should not affect the remedial objective to reduce groundwater infiltration in the area.

If you have any questions, please contact me at (404)562-8935.

Sincerely,

Pamela J. Langston Scully, P.E.
Remedial Project Manager
Superfund Remedial Branch

APPENDIX U2

Cover System for Area E

UNITED STATES ENVIRONMENTAL PROTECTION AGENCY
REGION 4
ATLANTA FEDERAL CENTER
61 FORSYTH STREET
ATLANTA, GEORGIA 30303-8960

September 2, 2015

Ms. E. Gayle Macolly
Manager, Remedial Projects
Solutia, Inc.
702 Clydesdale Avenue
Anniston, Alabama 36201-5328

RE: Operable Unit 3 Design Change
- Cover System for Area E
Anniston PCB Site, Anniston, Alabama

EPA CERCLA ID # ALD000400123
EPA RCRA ID # ALD004019048

Dear Ms. Macolly:

The U.S. Environmental Protection Agency has reviewed the change to the design of the cover system for Area E in operable unit 3 of the Anniston PCB Site. This change was provided by email from Steve Moeller on August 3, 2015. The purpose of this letter is to document that the EPA agrees that the change is appropriate based on the physical obstructions and future use plan for the area. The changes will maintain the remedial objective to reduce groundwater infiltration in the area.

If you have any questions, please contact me at (404)562-8935.

Sincerely,

Pamela J. Langston Scully, P.E.
Remedial Project Manager
Superfund Remedial Branch

APPENDIX U3

Area E Wall Height
Area H Fencing
Area A Vault Concrete Cover

From:	Macolly, Gayle
To:	Mike Price; John Loper; Thomas Loper; Moeller, Steve
Subject:	Fwd: [I] RE: Proposed Changes to Final Design, Operable Unit 3 Remedial Action (OU-3 RA) Cover Systems Project
Date:	Tuesday, February 02, 2016 10:27:01 AM

Sent from my iPhone

Begin forwarded message:

From: "Scully, Pam" <scully.pam@epa.gov<mailto:scully.pam@epa.gov>>
Date: February 2, 2016 at 10:08:54 AM EST
To: "Macolly, Gayle" <egmaco@eastman.com<mailto:egmaco@eastman.com>>
Cc: Tom Dahl <todahl@comcast.net<mailto:todahl@comcast.net>>, Mike Price <mprice@genproject.com<mailto:mprice@genproject.com>>, "jloper@lopergroup.com<mailto:jloper@lopergroup.com>" <jloper@lopergroup.com<mailto:jloper@lopergroup.com>>
Subject: [I] RE: Proposed Changes to Final Design, Operable Unit 3 Remedial Action (OU-3 RA) Cover Systems Project

Gayle,
I have reviewed the changed to the OU3 RD sent in your January 25th email. Tom Dahl and I discussed the changes with Mike Price during a site visit on January 25, 2016. I don't have any comments, and I approve of the modifications to the Remedial design. Thanks.
Pam

Pamela J Langston Scully, PE
Remedial Project Manager
US Environmental Protection Agency, Region 4
61 Forsyth Street, SW
Atlanta, GA 30303

Telephone: (404)562-8935
Mobile phone: (404)661-7378

From: Macolly, Gayle [mailto:egmaco@eastman.com]
Sent: Monday, January 25, 2016 4:28 PM
To: Scully, Pam
Cc: Tom Dahl; Mike Price; jloper@lopergroup.com<mailto:jloper@lopergroup.com>
Subject: Proposed Changes to Final Design, Operable Unit 3 Remedial Action (OU-3 RA) Cover Systems Project

Hi Pam:

On behalf of Solutia Inc. and Pharmacia LLC (collectively, P/S), please find enclosed three (3) drawings showing proposed design changes to Areas A, E and H for the Operable Unit 3 Remedial Action (OU-3 RA) Cover Systems Project. As communicated previously, P/S are considering these changes to coordinate future Plant projects with remedial activities related to the Anniston PCB Site. Details of the proposed changes are listed below:

- P/S propose to raise the height of the retaining wall along the perimeter of the "Future Controls Building" area

(building footprint is shown on Sheet 06 of the OU-3 Remedial Design Drawings). Details of the wall raise are included in the attached Area E Wall Profile (Control Building Area) drawing. This modification will accommodate future construction of the Control Building (not part of the Cover System or RA contract), and will not impact the overall design or construction of the cover system within Area E. Modifications to the wall in Area E are proposed to match the height of a future foundation wall that will be constructed for the Control Building. P/S will provide construction details of the foundation and surrounding concrete covers for the Control Building upon completion.

- The original site fencing layout was provided in Sheet 13 of the OU-3 Remedial Design Drawings. This layout has been revised to accommodate future landscaping along the visitor parking and sidewalk entrance area outside of the Plant's main offices (Area H) and to allow for better access in and out of the parking lot. Setting the fence-line back 7 feet will allow room for people to more safely access the parking lot and to install landscaping between the existing sidewalk and outside of the fence. The proposed fence layout within Area H is included in the attached Proposed New Fence Alignment (Area H) drawing. The proposed design includes removing an existing tree, locating the additional fencing as shown, and pouring a concrete cover along the eastern side of the visitor parking. For reference, the original fencing layout is included on the drawing.

- P/S propose a design change around the vault/pump station located on the western portion of Area A as shown on the attached Vault/Pump Station Locations/Details drawings. The originally approved design calls for construction of a concrete retaining wall around the perimeter of the pump station with a geomembrane and soil cover system on the adjacent areas. The design modification would replace a portion of the geomembrane cover with a six-inch concrete cap as approved under the IROD and shown on Sheets 10 and 11 of the Final Design Drawings. P/S would construct a six-inch concrete cap around the existing pump station and electrical components located in this area rather than attempting to cover this area with the geomembrane cover system. This modification will only affect approximately 1,000 sq ft (0.02 acres) of the capped area for Area A and would significantly expedite construction. The concrete cover would be constructed in accordance with the appropriate drawings and specifications included in the 100% design. P/S believe that this modification is appropriate and would actually provide a better cover system over this small area due to the challenges anticipated with installing the retaining walls and constructing a 2-ft thick cover over such a small area.

Please let me know if we have provided sufficient information for you to review and approve these proposed changes. If acceptable to you, we would document the change as part of the final as-built construction drawings.

Please do not hesitate to contact me at (256) 770-1299 with any questions and/or comments that you may have regarding this submittal.

Thanks,
Gayle

APPENDIX U4

Topsoil Borrow Source Approval

UNITED STATES ENVIRONMENTAL PROTECTION AGENCY
REGION 4
ATLANTA FEDERAL CENTER
61 FORSYTH STREET
ATLANTA, GEORGIA 30303-8960

July 31, 2015

Ms. E. Gayle Macolly
Manager, Remedial Projects
Solutia, Inc.
702 Clydesdale Avenue
Anniston, Alabama 36201-5328

RE: Topsoil Borrow Source
Operable Unit 3
Anniston PCB Site, Anniston, Alabama

EPA CERCLA ID # ALD000400123
EPA RCRA ID # ALD004019048

Dear Ms. Macolly:

The U.S. Environmental Protection Agency has reviewed the proposed topsoil borrow source evaluation report prepared for the Anniston PCB Site. Based on the sampling resulting include in the report, the EPA approves the use of the stockpiled soil from the Oxford Recreational Complex in Oxford, Alabama. If you have any questions, please contact me at (404)562-8935.

Sincerely,

Pamela J. Langston Scully, P.E.
Remedial Project Manager
Restoration and Sustainability Branch

cc: Mr. Chip Crockett (ADEM)
Mr. G. Douglas Jones, Esq.
Mr. Thomas Dahl

APPENDIX U5

SWMU-1 Design Change and Seep Capture

UNITED STATES ENVIRONMENTAL PROTECTION AGENCY
REGION 4
ATLANTA FEDERAL CENTER
61 FORSYTH STREET
ATLANTA, GEORGIA 30303-8960

August 28, 2016

Ms. E. Gayle Macolly
Manager, Remedial Projects
Solutia, Inc.
702 Clydesdale Avenue
Anniston, Alabama 36201-5328

RE: Operable Unit 3 Remedial Action
- SWMU 1 Design Change and Seep Capture
Anniston PCB Site, Anniston, Alabama

EPA CERCLA ID # ALD000400123
EPA RCRA ID # ALD004019048

Dear Ms. Macolly:

The U.S. Environmental Protection Agency has reviewed the change to the design of the SWMU groundwater extraction and treatment system which includes a plan to capture an intermittent seep that continues to impact the cover system constructed over the PCB Cells as part of the interim remedial action for Operable Unit (OU) 3 of the Anniston PCB Site. Design documents were submitted on May 13, 2016 and June 16, 2016. The purpose of this letter is to approve the submitted changes to the groundwater extraction and treatment system for SWMU 1. The EPA is aware that there may be additional specification changes under consideration for the vessels and/or tanks associated with the treatment system. Those changes should also be submitted for approval.

The EPA notes that the information related to the seep near the PCB cells is focused on a quick solution for handling the intermittent seep rather than investigating and possibly eliminating the seep. Although the proposed sump will provide a solution for handling the water, it may or may not be the best solution. More information relative to the seep south of the PCB cells is required as discussed below.

1. It appears from the surface elevation map of the landfill that Cell 1E and Cell 2E are located at a higher elevation than the seep. The topographic map also shows a steep downward slope east of the seep location. Although the landfill was covered with an impermeable cap, it is possible that the water table inside the landfill could rise above the elevation of the seep and that groundwater flow from various areas could drain to the seep. No discussion of the groundwater table elevation during the period when the seep was flowing was presented in the memo. There are a few wells up and down gradient of

the seep. Groundwater elevation during the wet season along with the seep elevation should be analyzed thoroughly, to evaluate flow direction and implications to the seep.

2. The elevation of the land surface south of the landfill is higher than the elevation of the seep (Figure 4). This area could be the potential recharge zone for the seep. Topographic map shows some thick vegetation east of MW-01B. This area should be studied thoroughly for potential source of the seep.

3. There was no discussion in the memo on the proposed sampling frequency and parameters from the sump proposed to collect water from the seep (Sheet F). A detailed monitoring plan should be provided.

4. No monitoring wells from immediately upgradient and downgradient of the south landfill should be abandoned until the source of the seep water is identified. These wells could be useful in identifying the source of the seep.

5. The map of the wells proposed for abandonment in a separate June 2, 2016 submittal should also include the wells remaining in the PSVP (Performance Standard Verification Plan). In addition, maps of groundwater equipotential lines should be provided for both wet and dry seasons. Review of the well abandonment plan will be completed upon receiving the map.

If a response to these comments cannot be provided within 30 days, please provide a proposed schedule for addressing them. If you have any questions, please contact me at (404)562-8935.

Sincerely,



Pamela J. Langston Scully, P.E.
Senior Remedial Project Manager
Restoration and Sustainability Branch

APPENDIX U6

Notification for Off-Site Disposal (Three Corners Facility)

Stevenson, Kelly

From: Whiting, Paula <Whiting.Paula@epa.gov> on behalf of R4CERCLA_OffsiteContact <R4CERCLA_OffsiteContact@epa.gov>
Sent: Monday, July 27, 2015 9:28 AM
To: Knighton, Mark Jack; Scully, Pam
Cc: Macolly, Gayle; Michael Price; Roper, Laurie Ann
Subject: CERCLA Off-Site Acceptability of Three Corners Regional Landfill, Piedmont, AL

Good Morning Mr. Knighton,

Three Corners Regional Landfill, Piedmont, Alabama is acceptable to receive waste regulated by the CERCLA Off-Site Rule. The EPA advises you to contact us within 60 days to check for continued acceptability.

Thanks,

Paula A Whiting
R4 CERCLA Regional Off-Site Contact
Hazardous Waste Enforcement and Compliance Section
Enforcement and Compliance Branch
Resource Conservation and Restoration Division
US Environmental Protection Agency - Region IV
Sam Nunn Atlanta Federal Center
61 Forsyth Street SW
Atlanta, GA 30303
Phone: 404-562-9277
FAX: 404-562-8566

Please Respond to R4CERCLA_OffSiteContact@epa.gov

NOTE: This message and any attachments from the U.S. Environmental Protection Agency may contain CONFIDENTIAL and legally protected information. If you are not the addressee or the intended recipient, please do not read, copy, use or disclose this communication to others. Also, please notify the sender by replying to this message and then delete it from your system.

From: Knighton, Mark Jack [mailto:mmknig1@eastman.com]
Sent: Friday, July 17, 2015 11:27 AM
To: Whiting, Paula; Scully, Pam
Cc: Macolly, Gayle; Mike Price; Roper, Laurie Ann
Subject: Contaminated Soil

Good morning,

Solutia Inc., a subsidiary of Eastman Chemical in order to comply with the Final Remedial Design Report is notifying you that we will be shipping contaminated soil (profile BK3714) off site to Waste Management Emelle Al (ALD000622464) starting 7/26/2015 and intermittently to WM – Emelle for the next 60 days which will take us to September 24, 2015.

Also, we will potentially ship profile CF6400 to Three Corners Landfill in Piedmont AL (ALR000036343) during this time as well.

Please let me know if you need any additional information.

Thank you for your time and help in this matter.

Have a great weekend.

Work Safe, Home Safe

Mark J. Knighton, CSP

HSES Specialist
702 Clydesdale Ave.
Anniston, AL 36201
Office (256) 231-8549
Cell (256) 282-6292
mmknig1@eastman.com



Stevenson, Kelly

From: Whiting, Paula <Whiting.Paula@epa.gov> on behalf of R4CERCLA_OffsiteContact <R4CERCLA_OffsiteContact@epa.gov>
Sent: Wednesday, September 23, 2015 3:04 PM
To: Knighton, Mark Jack; Scully, Pam
Cc: Macolly, Gayle; Michael Price; Roper, Laurie Ann
Subject: CERCLA Off-Site Acceptability of Three Corners Regional Landfill, Piedmont, AL

Good Afternoon Mark,

Three Corners Regional Landfill, Piedmont, Alabama is acceptable to receive waste regulated by the CERCLA Off-Site Rule. The EPA advises you to contact us within 60 days to check for continued acceptability.

Thanks,

Paula A Whiting
R4 CERCLA Regional Off-Site Contact
Hazardous Waste Enforcement and Compliance Section
Enforcement and Compliance Branch
Resource Conservation and Restoration Division
US Environmental Protection Agency - Region IV
Sam Nunn Atlanta Federal Center
61 Forsyth Street SW
Atlanta, GA 30303
Phone: 404-562-9277
FAX: 404-562-8566

Please Respond to R4CERCLA_OffSiteContact@epa.gov

NOTE: This message and any attachments from the U.S. Environmental Protection Agency may contain CONFIDENTIAL and legally protected information. If you are not the addressee or the intended recipient, please do not read, copy, use or disclose this communication to others. Also, please notify the sender by replying to this message and then delete it from your system.

From: Knighton, Mark Jack [mailto:mmknig1@eastman.com]
Sent: Tuesday, September 22, 2015 3:56 PM
To: Whiting, Paula; Scully, Pam
Cc: Macolly, Gayle; Mike Price; Roper, Laurie Ann
Subject: Contaminated Soil

Good afternoon,

Solutia Inc., a subsidiary of Eastman Chemical in order to comply with the Final Remedial Design Report is notifying you that we will be shipping contaminated soil (profile BK3714) off site to Waste Management Emelle Al (ALD000622464) starting 9/26/2015 and intermittently to WM – Emelle for the next 60 days which will take us to November 25, 2015.

Also, we will potentially ship profile CF6400 to Three Corners Landfill in Piedmont AL (ALR000036343) during this time as well.

Please let me know if you need any additional information.

Thank you for your time and help in this matter.

Have a great evening.

Work Safe, Home Safe

Mark J. Knighton, CSP

HSES Specialist
702 Clydesdale Ave.
Anniston, AL 36201
Office (256) 231-8549
Cell (256) 282-6292
mmknig1@eastman.com

Stevenson, Kelly

From: Whiting, Paula <Whiting.Paula@epa.gov> on behalf of R4CERCLA_OffsiteContact <R4CERCLA_OffsiteContact@epa.gov>
Sent: Tuesday, November 24, 2015 11:42 AM
To: Knighton, Mark Jack; Scully, Pam
Cc: Macolly, Gayle; Michael Price; Roper, Laurie Ann; BBarber@adem.state.al.us
Subject: CERCLA Off-Site Acceptability of Three Corners Regional Landfill, Piedmont, AL

Good Morning Mr. Knighton,

Three Corners Regional Landfill, Piedmont, Alabama is acceptable to receive waste regulated by the CERCLA Off-Site Rule. The EPA advises you to contact us within 60 days to check for continued acceptability.

Thanks,

Paula A Whiting
R4 CERCLA Regional Off-Site Contact
Hazardous Waste Enforcement and Compliance Section
Enforcement and Compliance Branch
Resource Conservation and Restoration Division
US Environmental Protection Agency - Region IV
Sam Nunn Atlanta Federal Center
61 Forsyth Street SW
Atlanta, GA 30303
Phone: 404-562-9277
FAX: 404-562-8566

Please Respond to R4CERCLA_OffSiteContact@epa.gov

NOTE: This message and any attachments from the U.S. Environmental Protection Agency may contain CONFIDENTIAL and legally protected information. If you are not the addressee or the intended recipient, please do not read, copy, use or disclose this communication to others. Also, please notify the sender by replying to this message and then delete it from your system.

From: Knighton, Mark Jack [mailto:mmknig1@eastman.com]
Sent: Tuesday, November 17, 2015 10:07 AM
To: Scully, Pam ; Whiting, Paula
Cc: Macolly, Gayle ; Mike Price ; Roper, Laurie Ann
Subject: Contaminated Soil

Good morning,

Solutia Inc., a subsidiary of Eastman Chemical in order to comply with the Final Remedial Design Report is notifying you that we will be shipping contaminated soil (profile BK3714) off site to Waste Management Emelle Al (ALD000622464) starting 11/26/2015 and intermittently to WM – Emelle for the next 60 days which will take us to January 25, 2016.

Also, we will potentially ship profile CF6400 to Three Corners Landfill in Piedmont AL (ALR000036343) during this time as well.

Please let me know if you need any additional information.

Thank you for your time and help in this matter.

Have a great day.

Work Safe, Home Safe

Mark J. Knighton, CSP

HSES Specialist
702 Clydesdale Ave.
Anniston, AL 36201
Office (256) 231-8549
Cell (256) 282-6292
mmknig1@eastman.com

Stevenson, Kelly

From: Whiting, Paula <Whiting.Paula@epa.gov> on behalf of R4CERCLA_OffsiteContact <R4CERCLA_OffsiteContact@epa.gov>
Sent: Thursday, January 21, 2016 10:53 AM
To: Knighton, Mark Jack; Scully, Pam
Cc: Macolly, Gayle; Michael Price; Roper, Laurie Ann; BBarber@adem.state.al.us
Subject: CERCLA Off-Site Acceptability of Three Corners Regional Landfill, Piedmont, AL

Good Morning Mark,

Three Corners Regional Landfill, Piedmont, Alabama is acceptable to receive waste regulated by the CERCLA Off-Site Rule. The EPA advises you to contact us within 60 days to check for continued acceptability

Thanks,

Paula A Whiting
R4 CERCLA Regional Off-Site Contact
Hazardous Waste Enforcement and Compliance Section
Enforcement and Compliance Branch
Resource Conservation and Restoration Division
US Environmental Protection Agency - Region IV
Sam Nunn Atlanta Federal Center
61 Forsyth Street SW
Atlanta, GA 30303
Phone: 404-562-9277
FAX: 404-562-8566

Please Respond to R4CERCLA_OffSiteContact@epa.gov

NOTE: This message and any attachments from the U.S. Environmental Protection Agency may contain CONFIDENTIAL and legally protected information. If you are not the addressee or the intended recipient, please do not read, copy, use or disclose this communication to others. Also, please notify the sender by replying to this message and then delete it from your system.

From: Knighton, Mark Jack [mailto:mmknig1@eastman.com]
Sent: Wednesday, January 20, 2016 9:05 AM
To: Scully, Pam ; Whiting, Paula
Cc: Macolly, Gayle ; Mike Price ; Roper, Laurie Ann
Subject: Impacted Soil

Good morning,

Solutia Inc., a subsidiary of Eastman Chemical in order to comply with the Final Remedial Design Report is notifying you that we will be shipping contaminated soil (profile BK3714) off site to Waste Management Emelle Al (ALD000622464) starting 01/26/2016 and intermittently to WM – Emelle for the next 60 days which will take us to March 26, 2016.

Also, we will potentially ship profile CF6400 to Three Corners Landfill in Piedmont AL (ALR000036343) during this time as well.

Please let me know if you need any additional information.

Thank you for your time and help in this matter.

Have a great day.

Work Safe, Home Safe

Mark J. Knighton, CSP

HSES Specialist
702 Clydesdale Ave.
Anniston, AL 36201
Office (256) 231-8549
Cell (256) 282-6292
mmknig1@eastman.com

Stevenson, Kelly

From: Whiting, Paula <Whiting.Paula@epa.gov> on behalf of R4CERCLA_OffsiteContact <R4CERCLA_OffsiteContact@epa.gov>
Sent: Wednesday, May 25, 2016 3:55 PM
To: Knighton, Mark Jack; Scully, Pam
Cc: Macolly, Gayle; Michael Price; Roper, Laurie Ann; BBarber@adem.state.al.us
Subject: CERCLA Off-Site Acceptability of Three Corners Regional Landfill, Piedmont, AL

Good Afternoon Mark,

Three Corners Regional Landfill, Piedmont, Alabama is acceptable to receive waste regulated by the CERCLA Off-Site Rule. The EPA advises you to contact us within 60 days to check for continued acceptability.

Thanks,

Paula A Whiting
R4 CERCLA Regional Off-Site Contact
Hazardous Waste Enforcement and Compliance Section
Enforcement and Compliance Branch
Resource Conservation and Restoration Division
US Environmental Protection Agency - Region IV
Sam Nunn Atlanta Federal Center
61 Forsyth Street SW, 10th Floor
Atlanta, GA 30303
Phone: 404-562-9277
FAX: 404-562-8566

Please Respond to R4CERCLA_OffSiteContact@epa.gov

NOTE: This message and any attachments from the U.S. Environmental Protection Agency may contain CONFIDENTIAL and legally protected information. If you are not the addressee or the intended recipient, please do not read, copy, use or disclose this communication to others. Also, please notify the sender by replying to this message and then delete it from your system.

From: Knighton, Mark Jack [mailto:mmknig1@eastman.com]
Sent: Wednesday, May 25, 2016 8:41 AM
To: Scully, Pam ; Whiting, Paula
Cc: Macolly, Gayle ; Mike Price ; Roper, Laurie Ann
Subject: Impacted soil

Good afternoon,

Solutia Inc., a subsidiary of Eastman Chemical in order to comply with the Final Remedial Design Report is notifying you that we will be shipping contaminated soil (profile BK3714) off site to Waste Management Emelle Al (ALD000622464) starting May 27, 2016 and intermittently to WM – Emelle for the next 60 days which will take us to July 26, 2016.

Also, we will potentially ship profile CF6400 to Three Corners Landfill in Piedmont AL (ALR000036343) during this time as well.

Please let me know if you need any additional information.

Thank you for your time and help in this matter.

Have a great day.

Work Safe, Home Safe

Mark J. Knighton, CSP

HSES Specialist
702 Clydesdale Ave.
Anniston, AL 36201
Office (256) 231-8549
Cell (256) 282-6292
mmknig1@eastman.com

Stevenson, Kelly

From: Whiting, Paula <Whiting.Paula@epa.gov> on behalf of R4CERCLA_OffsiteContact <R4CERCLA_OffsiteContact@epa.gov>
Sent: Tuesday, July 26, 2016 2:43 PM
To: Knighton, Mark Jack; Scully, Pam
Cc: Macolly, Gayle; Michael Price; Roper, Laurie Ann; BBarber@adem.state.al.us
Subject: RE: Soil Shipments

Good Afternoon Mark,

Three Corners Regional Landfill, Piedmont, Alabama is acceptable to receive waste regulated by the CERCLA Off-Site Rule. The EPA advises you to contact us within 60 days to check for continued acceptability.

Thanks,

Paula A Whiting
R4 CERCLA Regional Off-Site Contact
Hazardous Waste Enforcement and Compliance Section
Enforcement and Compliance Branch
Resource Conservation and Restoration Division
US Environmental Protection Agency - Region IV
Sam Nunn Atlanta Federal Center
61 Forsyth Street SW, 10th Floor
Atlanta, GA 30303
Phone: 404-562-9277
FAX: 404-562-8566

Please Respond to R4CERCLA_OffSiteContact@epa.gov

NOTE: This message and any attachments from the U.S. Environmental Protection Agency may contain CONFIDENTIAL and legally protected information. If you are not the addressee or the intended recipient, please do not read, copy, use or disclose this communication to others. Also, please notify the sender by replying to this message and then delete it from your system.

From: Knighton, Mark Jack [mailto:mmknig1@eastman.com]
Sent: Thursday, July 21, 2016 9:22 AM
To: Scully, Pam ; Whiting, Paula
Cc: Macolly, Gayle ; Mike Price ; Roper, Laurie Ann
Subject: Soil Shipments

Good morning,

Solutia Inc., a subsidiary of Eastman Chemical in order to comply with the Final Remedial Design Report is notifying you that we will be shipping contaminated soil (profile BK3714) off site to Waste Management Emelle Al (ALD000622464) starting July 27, 2016 and intermittently to WM – Emelle for the next 60 days which will take us to September 25, 2016.

Also, we will potentially ship profile CF6400 to Three Corners Landfill in Piedmont AL (ALR000036343) during this time as well.

Please let me know if you need any additional information.

Thank you for your time and help in this matter.

Have a great day.

Mark

Work Safe, Home Safe

Mark J. Knighton, CSP

HSES Specialist
702 Clydesdale Ave.
Anniston, AL 36201
Office (256) 231-8549
Cell (256) 282-6292
mmknig1@eastman.com

Stevenson, Kelly

From: Whiting, Paula <Whiting.Paula@epa.gov> on behalf of R4CERCLA_OffsiteContact <R4CERCLA_OffsiteContact@epa.gov>
Sent: Tuesday, September 20, 2016 8:02 AM
To: Knighton, Mark Jack; Scully, Pam
Cc: Macolly, Gayle; Michael Price; Roper, Laurie Ann; BBarber@adem.state.al.us
Subject: CERCLA Off-Site Acceptability of Three Corners Regional Landfill, Piedmont, AL

Good Morning Mark,

Three Corners Regional Landfill, Piedmont, Alabama is acceptable to receive waste regulated by the CERCLA Off-Site Rule. The EPA advises you to contact us within 60 days to check for continued acceptability.

Thanks,

Paula A Whiting
Environmental Engineer
Hazardous Waste Enforcement and Compliance Section
Enforcement and Compliance Branch
Resource Conservation and Restoration Division
US Environmental Protection Agency - Region IV
Sam Nunn Atlanta Federal Center
61 Forsyth Street SW, 10th Floor
Atlanta, GA 30303
Phone: 404-562-9277
FAX: 404-562-8566

NOTE: This message and any attachments from the U.S. Environmental Protection Agency may contain CONFIDENTIAL and legally protected information. If you are not the addressee or the intended recipient, please do not read, copy, use or disclose this communication to others. Also, please notify the sender by replying to this message and then delete it from your system.

From: Knighton, Mark Jack [mailto:mmknig1@eastman.com]
Sent: Monday, September 19, 2016 11:29 AM
To: Scully, Pam ; Whiting, Paula
Cc: Macolly, Gayle ; Mike Price ; Roper, Laurie Ann
Subject: Impacted Soil

Good morning,

Solutia Inc., a subsidiary of Eastman Chemical in order to comply with the Final Remedial Design Report is notifying you that we will be shipping contaminated soil (profile BK3714) off site to Waste Management Emelle Al (ALD000622464) starting September 26, 2016 and intermittently to WM – Emelle for the next 60 days which will take us to November 25, 2016.

Also, we will potentially ship profile CF6400 to Three Corners Landfill in Piedmont AL (ALR000036343) during this time as well.

Please let me know if you need any additional information.

Thank you for your time and help in this matter.

Have a great day.

Mark

Work Safe, Home Safe

Mark J. Knighton, CSP

HSES Specialist
702 Clydesdale Ave.
Anniston, AL 36201
Office (256) 231-8549
Cell (256) 282-6292
mmknig1@eastman.com



Stevenson, Kelly

From: Whiting, Paula <Whiting.Paula@epa.gov> on behalf of R4CERCLA_OffsiteContact <R4CERCLA_OffsiteContact@epa.gov>
Sent: Friday, November 18, 2016 2:56 PM
To: Knighton, Mark Jack; Scully, Pam
Cc: Macolly Harris, Gayle; Michael Price; Roper, Laurie Ann; BBarber@adem.state.al.us
Subject: CERCLA Off-Site Acceptability of Three Corners Regional Landfill, Piedmont, AL

Good Afternoon Mark,

Three Corners Regional Landfill, Piedmont, Alabama is acceptable to receive waste regulated by the CERCLA Off-Site Rule. The EPA advises you to contact us within 60 days to check for continued acceptability.

Thanks,

Paula A Whiting
R4 CERCLA Regional Off-Site Contact
Hazardous Waste Enforcement and Compliance Section
Enforcement and Compliance Branch
Resource Conservation and Restoration Division
US Environmental Protection Agency - Region IV
Sam Nunn Atlanta Federal Center
61 Forsyth Street SW, 10th Floor
Atlanta, GA 30303
Phone: 404-562-9277
FAX: 404-562-8566

Please Respond to R4CERCLA_OffSiteContact@epa.gov

NOTE: This message and any attachments from the U.S. Environmental Protection Agency may contain CONFIDENTIAL and legally protected information. If you are not the addressee or the intended recipient, please do not read, copy, use or disclose this communication to others. Also, please notify the sender by replying to this message and then delete it from your system.

From: Knighton, Mark Jack [mailto:mmknig1@eastman.com]
Sent: Friday, November 18, 2016 9:03 AM
To: Scully, Pam ; Whiting, Paula
Cc: Macolly Harris, Gayle ; Mike Price ; Roper, Laurie Ann
Subject: Impacted Soil

Good morning,

Solutia Inc., a subsidiary of Eastman Chemical in order to comply with the Final Remedial Design Report is notifying you that we will be shipping contaminated soil (profile BK3714) off site to Waste Management Emelle Al (ALD000622464) starting November 26, 2016 and intermittently to WM – Emelle for the next 60 days which will take us to January 25, 2017.

Also, we will potentially ship profile CF6400 to Three Corners Landfill in Piedmont AL (ALR000036343) during this time as well.

Please let me know if you need any additional information.

Thank you for your time and help in this matter.

Have a great weekend.

Mark

Work Safe, Home Safe

Mark J. Knighton, CSP

HSES Specialist
702 Clydesdale Ave.
Anniston, AL 36201
Office (256) 231-8549
Cell (256) 282-6292
mmknig1@eastman.com

APPENDIX U7

Notification for Off-Site Disposal (Emelle Facility)

Stevenson, Kelly

From: Whiting, Paula <Whiting.Paula@epa.gov> on behalf of R4CERCLA_OffsiteContact <R4CERCLA_OffsiteContact@epa.gov>
Sent: Monday, July 27, 2015 9:30 AM
To: Knighton, Mark Jack; Scully, Pam
Cc: Macolly, Gayle; Michael Price; Roper, Laurie Ann
Subject: CERCLA Off-Site Acceptability of Chemical Waste Management, Emelle, AL

Good Morning Mr. Knighton,

Chemical Waste Management, Emelle, Alabama is acceptable to receive waste regulated by the CERCLA Off-Site Rule. The EPA advises you to contact us within 60 days to check for continued acceptability.

Thanks,

Paula A Whiting
R4 CERCLA Regional Off-Site Contact
Hazardous Waste Enforcement and Compliance Section
Enforcement and Compliance Branch
Resource Conservation and Restoration Division
US Environmental Protection Agency - Region IV
Sam Nunn Atlanta Federal Center
61 Forsyth Street SW
Atlanta, GA 30303
Phone: 404-562-9277
FAX: 404-562-8566

Please Respond to R4CERCLA_OffSiteContact@epa.gov

NOTE: This message and any attachments from the U.S. Environmental Protection Agency may contain CONFIDENTIAL and legally protected information. If you are not the addressee or the intended recipient, please do not read, copy, use or disclose this communication to others. Also, please notify the sender by replying to this message and then delete it from your system.

From: Knighton, Mark Jack [mailto:mmknig1@eastman.com]
Sent: Friday, July 17, 2015 11:27 AM
To: Whiting, Paula; Scully, Pam
Cc: Macolly, Gayle; Mike Price; Roper, Laurie Ann
Subject: Contaminated Soil

Good morning,

Solutia Inc., a subsidiary of Eastman Chemical in order to comply with the Final Remedial Design Report is notifying you that we will be shipping contaminated soil (profile BK3714) off site to Waste Management Emelle Al (ALD000622464) starting 7/26/2015 and intermittently to WM – Emelle for the next 60 days which will take us to September 24, 2015.

Also, we will potentially ship profile CF6400 to Three Corners Landfill in Piedmont AL (ALR000036343) during this time as well.

Please let me know if you need any additional information.

Thank you for your time and help in this matter.

Have a great weekend.

Work Safe, Home Safe

Mark J. Knighton, CSP

HSES Specialist
702 Clydesdale Ave.
Anniston, AL 36201
Office (256) 231-8549
Cell (256) 282-6292
mmknig1@eastman.com



Stevenson, Kelly

From: Whiting, Paula <Whiting.Paula@epa.gov> on behalf of R4CERCLA_OffsiteContact <R4CERCLA_OffsiteContact@epa.gov>
Sent: Wednesday, September 23, 2015 2:30 PM
To: Knighton, Mark Jack; Scully, Pam
Cc: Macolly, Gayle; Michael Price; Roper, Laurie Ann; LKnickerbocker@adem.state.al.us
Subject: CERCLA Off-Site Acceptability of Chemical Waste Management, Emelle, AL

Good Afternoon Mark,

Chemical Waste Management, Emelle, Alabama is acceptable to receive waste regulated by the CERCLA Off-Site Rule. The EPA advises you to contact us within 60 days to check for continued acceptability.

Thanks,

Paula A Whiting
R4 CERCLA Regional Off-Site Contact
Hazardous Waste Enforcement and Compliance Section
Enforcement and Compliance Branch
Resource Conservation and Restoration Division
US Environmental Protection Agency - Region IV
Sam Nunn Atlanta Federal Center
61 Forsyth Street SW
Atlanta, GA 30303
Phone: 404-562-9277
FAX: 404-562-8566

Please Respond to R4CERCLA_OffSiteContact@epa.gov

NOTE: This message and any attachments from the U.S. Environmental Protection Agency may contain CONFIDENTIAL and legally protected information. If you are not the addressee or the intended recipient, please do not read, copy, use or disclose this communication to others. Also, please notify the sender by replying to this message and then delete it from your system.

From: Knighton, Mark Jack [mailto:mmknig1@eastman.com]
Sent: Tuesday, September 22, 2015 3:56 PM
To: Whiting, Paula; Scully, Pam
Cc: Macolly, Gayle; Mike Price; Roper, Laurie Ann
Subject: Contaminated Soil

Good afternoon,

Solutia Inc., a subsidiary of Eastman Chemical in order to comply with the Final Remedial Design Report is notifying you that we will be shipping contaminated soil (profile BK3714) off site to Waste Management Emelle Al (ALD000622464) starting 9/26/2015 and intermittently to WM – Emelle for the next 60 days which will take us to November 25, 2015.

Also, we will potentially ship profile CF6400 to Three Corners Landfill in Piedmont AL (ALR000036343) during this time as well.

Please let me know if you need any additional information.

Thank you for your time and help in this matter.

Have a great evening.

Work Safe, Home Safe

Mark J. Knighton, CSP

HSES Specialist
702 Clydesdale Ave.
Anniston, AL 36201
Office (256) 231-8549
Cell (256) 282-6292
mmknig1@eastman.com

Stevenson, Kelly

From: Whiting, Paula <Whiting.Paula@epa.gov> on behalf of R4CERCLA_OffsiteContact <R4CERCLA_OffsiteContact@epa.gov>
Sent: Tuesday, November 24, 2015 11:40 AM
To: Knighton, Mark Jack; Scully, Pam
Cc: Macolly, Gayle; Michael Price; Roper, Laurie Ann; Knickerbocker, Linda; BBarber@adem.state.al.us
Subject: CERCLA Off-Site Acceptability of Chemical Waste Management, Emelle, AL

Good Morning Mr. Knighton,

Chemical Waste Management, Emelle, Alabama is acceptable to receive waste regulated by the CERCLA Off-Site Rule. The EPA advises you to contact us within 60 days to check for continued acceptability.

Thanks,

Paula A Whiting
R4 CERCLA Regional Off-Site Contact
Hazardous Waste Enforcement and Compliance Section
Enforcement and Compliance Branch
Resource Conservation and Restoration Division
US Environmental Protection Agency - Region IV
Sam Nunn Atlanta Federal Center
61 Forsyth Street SW
Atlanta, GA 30303
Phone: 404-562-9277
FAX: 404-562-8566

Please Respond to R4CERCLA_OffSiteContact@epa.gov

NOTE: This message and any attachments from the U.S. Environmental Protection Agency may contain CONFIDENTIAL and legally protected information. If you are not the addressee or the intended recipient, please do not read, copy, use or disclose this communication to others. Also, please notify the sender by replying to this message and then delete it from your system.

From: Knighton, Mark Jack [mailto:mmknig1@eastman.com]
Sent: Tuesday, November 17, 2015 10:07 AM
To: Scully, Pam ; Whiting, Paula
Cc: Macolly, Gayle ; Mike Price ; Roper, Laurie Ann
Subject: Contaminated Soil

Good morning,

Solutia Inc., a subsidiary of Eastman Chemical in order to comply with the Final Remedial Design Report is notifying you that we will be shipping contaminated soil (profile BK3714) off site to Waste Management Emelle Al (ALD000622464) starting 11/26/2015 and intermittently to WM – Emelle for the next 60 days which will take us to January 25, 2016.

Also, we will potentially ship profile CF6400 to Three Corners Landfill in Piedmont AL (ALR000036343) during this time as well.

Please let me know if you need any additional information.

Thank you for your time and help in this matter.

Have a great day.

Work Safe, Home Safe

Mark J. Knighton, CSP

HSES Specialist
702 Clydesdale Ave.
Anniston, AL 36201
Office (256) 231-8549
Cell (256) 282-6292
mmknig1@eastman.com

EASTMAN

Stevenson, Kelly

From: Whiting, Paula <Whiting.Paula@epa.gov> on behalf of R4CERCLA_OffsiteContact <R4CERCLA_OffsiteContact@epa.gov>
Sent: Thursday, January 21, 2016 10:30 AM
To: Knighton, Mark Jack; Scully, Pam
Cc: Macolly, Gayle; Michael Price; Roper, Laurie Ann; Knickerbocker, Linda; BBarber@adem.state.al.us
Subject: CERCLA Off-Site Acceptability of Chemical Waste Management, Emelle, AL

Good Morning Mark,

Chemical Waste Management, Emelle, Alabama is acceptable to receive waste regulated by the CERCLA Off-Site Rule. The EPA advises you to contact us within 60 days to check for continued acceptability.

Thanks,

Paula A Whiting
Environmental Engineer
Hazardous Waste Enforcement and Compliance Section
Enforcement and Compliance Branch
Resource Conservation and Restoration Division
US Environmental Protection Agency - Region IV
Sam Nunn Atlanta Federal Center
61 Forsyth Street SW
Atlanta, GA 30303
Phone: 404-562-9277
FAX: 404-562-8566

NOTE: This message and any attachments from the U.S. Environmental Protection Agency may contain CONFIDENTIAL and legally protected information. If you are not the addressee or the intended recipient, please do not read, copy, use or disclose this communication to others. Also, please notify the sender by replying to this message and then delete it from your system.

From: Knighton, Mark Jack [mailto:mmknig1@eastman.com]
Sent: Wednesday, January 20, 2016 9:05 AM
To: Scully, Pam ; Whiting, Paula
Cc: Macolly, Gayle ; Mike Price ; Roper, Laurie Ann
Subject: Impacted Soil

Good morning,

Solutia Inc., a subsidiary of Eastman Chemical in order to comply with the Final Remedial Design Report is notifying you that we will be shipping contaminated soil (profile BK3714) off site to Waste Management Emelle Al (ALD000622464) starting 01/26/2016 and intermittently to WM – Emelle for the next 60 days which will take us to March 26, 2016.

Also, we will potentially ship profile CF6400 to Three Corners Landfill in Piedmont AL (ALR000036343) during this time as well.

Please let me know if you need any additional information.

Thank you for your time and help in this matter.

Have a great day.

Work Safe, Home Safe

Mark J. Knighton, CSP

HSES Specialist
702 Clydesdale Ave.
Anniston, AL 36201
Office (256) 231-8549
Cell (256) 282-6292
mmknig1@eastman.com

Stevenson, Kelly

From: Whiting, Paula <Whiting.Paula@epa.gov> on behalf of R4CERCLA_OffsiteContact <R4CERCLA_OffsiteContact@epa.gov>
Sent: Friday, March 25, 2016 1:23 PM
To: Knighton, Mark Jack; Scully, Pam
Cc: Macolly, Gayle; Michael Price; Knickerbocker, Linda; BBarber@adem.state.al.us
Subject: CERCLA Off-Site Acceptability of Chemical Waste Management, Emelle, AL

Good Afternoon Mark,

Chemical Waste Management, Emelle, Alabama is acceptable to receive waste regulated by the CERCLA Off-Site Rule. The EPA advises you to contact us within 60 days to check for continued acceptability.

Thanks,

Paula A Whiting
Environmental Engineer
Hazardous Waste Enforcement and Compliance Section
Enforcement and Compliance Branch
Resource Conservation and Restoration Division
US Environmental Protection Agency - Region IV
Sam Nunn Atlanta Federal Center
61 Forsyth Street SW
Atlanta, GA 30303
Phone: 404-562-9277
FAX: 404-562-8566

NOTE: This message and any attachments from the U.S. Environmental Protection Agency may contain CONFIDENTIAL and legally protected information. If you are not the addressee or the intended recipient, please do not read, copy, use or disclose this communication to others. Also, please notify the sender by replying to this message and then delete it from your system.

From: Knighton, Mark Jack [mailto:mmknig1@eastman.com]
Sent: Monday, March 21, 2016 3:14 PM
To: Scully, Pam ; Whiting, Paula
Cc: Macolly, Gayle ; Mike Price ; Roper, Laurie Ann
Subject: Impacted Soil

Good afternoon,

Solutia Inc., a subsidiary of Eastman Chemical in order to comply with the Final Remedial Design Report is notifying you that we will be shipping contaminated soil (profile BK3714) off site to Waste Management Emelle Al (ALD000622464) starting March 27, 2016 and intermittently to WM – Emelle for the next 60 days which will take us to May 26, 2016.

Also, we will potentially ship profile CF6400 to Three Corners Landfill in Piedmont AL (ALR000036343) during this time as well.

Please let me know if you need any additional information.

Thank you for your time and help in this matter.

Have a great day.

Work Safe, Home Safe

Mark J. Knighton, CSP

HSES Specialist
702 Clydesdale Ave.
Anniston, AL 36201
Office (256) 231-8549
Cell (256) 282-6292
mmknig1@eastman.com

Stevenson, Kelly

From: Whiting, Paula <Whiting.Paula@epa.gov> on behalf of R4CERCLA_OffsiteContact <R4CERCLA_OffsiteContact@epa.gov>
Sent: Wednesday, May 25, 2016 3:49 PM
To: Knighton, Mark Jack; Scully, Pam
Cc: Macolly, Gayle; Michael Price; Roper, Laurie Ann; BBarber@adem.state.al.us; Knickerbocker, Linda
Subject: CERCLA Off-Site Acceptability of Chemical Waste Management, Emelle, AL

Good Afternoon Mark,

Chemical Waste Management, Emelle, Alabama is acceptable to receive waste regulated by the CERCLA Off-Site Rule. The EPA advises you to contact us within 60 days to check for continued acceptability.

Thanks,

Paula A Whiting
Environmental Engineer
Hazardous Waste Enforcement and Compliance Section
Enforcement and Compliance Branch
Resource Conservation and Restoration Division
US Environmental Protection Agency - Region IV
Sam Nunn Atlanta Federal Center
61 Forsyth Street SW, 10th Floor
Atlanta, GA 30303
Phone: 404-562-9277
FAX: 404-562-8566

NOTE: This message and any attachments from the U.S. Environmental Protection Agency may contain CONFIDENTIAL and legally protected information. If you are not the addressee or the intended recipient, please do not read, copy, use or disclose this communication to others. Also, please notify the sender by replying to this message and then delete it from your system.

From: Knighton, Mark Jack [mailto:mmknig1@eastman.com]
Sent: Wednesday, May 25, 2016 8:41 AM
To: Scully, Pam ; Whiting, Paula
Cc: Macolly, Gayle ; Mike Price ; Roper, Laurie Ann
Subject: Impacted soil

Good afternoon,

Solutia Inc., a subsidiary of Eastman Chemical in order to comply with the Final Remedial Design Report is notifying you that we will be shipping contaminated soil (profile BK3714) off site to Waste Management Emelle Al (ALD000622464) starting May 27, 2016 and intermittently to WM – Emelle for the next 60 days which will take us to July 26, 2016.

Also, we will potentially ship profile CF6400 to Three Corners Landfill in Piedmont AL (ALR000036343) during this time as well.

Please let me know if you need any additional information.

Thank you for your time and help in this matter.

Have a great day.

Work Safe, Home Safe

Mark J. Knighton, CSP

HSES Specialist
702 Clydesdale Ave.
Anniston, AL 36201
Office (256) 231-8549
Cell (256) 282-6292
mmknig1@eastman.com

Stevenson, Kelly

From: Whiting, Paula <Whiting.Paula@epa.gov> on behalf of R4CERCLA_OffsiteContact <R4CERCLA_OffsiteContact@epa.gov>
Sent: Tuesday, July 26, 2016 2:38 PM
To: Knighton, Mark Jack; Scully, Pam
Cc: Macolly, Gayle; Michael Price; Roper, Laurie Ann; BBarber@adem.state.al.us; Knickerbocker, Linda
Subject: CERCLA Off-Site Acceptability of Chemical Waste Management, Emelle, AL

Good Afternoon Mark,

Chemical Waste Management, Emelle, Alabama is acceptable to receive waste regulated by the CERCLA Off-Site Rule. The EPA advises you to contact us within 60 days to check for continued acceptability.

Thanks,

Paula A Whiting
R4 CERCLA Regional Off-Site Contact
Hazardous Waste Enforcement and Compliance Section
Enforcement and Compliance Branch
Resource Conservation and Restoration Division
US Environmental Protection Agency - Region IV
Sam Nunn Atlanta Federal Center
61 Forsyth Street SW, 10th Floor
Atlanta, GA 30303
Phone: 404-562-9277
FAX: 404-562-8566

Please Respond to R4CERCLA_OffSiteContact@epa.gov

NOTE: This message and any attachments from the U.S. Environmental Protection Agency may contain CONFIDENTIAL and legally protected information. If you are not the addressee or the intended recipient, please do not read, copy, use or disclose this communication to others. Also, please notify the sender by replying to this message and then delete it from your system.

From: Knighton, Mark Jack [mailto:mmknig1@eastman.com]
Sent: Thursday, July 21, 2016 9:22 AM
To: Scully, Pam ; Whiting, Paula
Cc: Macolly, Gayle ; Mike Price ; Roper, Laurie Ann
Subject: Soil Shipments

Good morning,

Solutia Inc., a subsidiary of Eastman Chemical in order to comply with the Final Remedial Design Report is notifying you that we will be shipping contaminated soil (profile BK3714) off site to Waste Management Emelle Al (ALD000622464) starting July 27, 2016 and intermittently to WM – Emelle for the next 60 days which will take us to September 25, 2016.

Also, we will potentially ship profile CF6400 to Three Corners Landfill in Piedmont AL (ALR000036343) during this time as well.

Please let me know if you need any additional information.

Thank you for your time and help in this matter.

Have a great day.

Mark

Work Safe, Home Safe

Mark J. Knighton, CSP

HSES Specialist
702 Clydesdale Ave.
Anniston, AL 36201
Office (256) 231-8549
Cell (256) 282-6292
mmknig1@eastman.com

EASTMAN

Stevenson, Kelly

From: Whiting, Paula <Whiting.Paula@epa.gov> on behalf of R4CERCLA_OffsiteContact <R4CERCLA_OffsiteContact@epa.gov>
Sent: Tuesday, September 20, 2016 8:00 AM
To: Knighton, Mark Jack; Scully, Pam
Cc: Macolly, Gayle; Michael Price; Roper, Laurie Ann; BBarber@adem.state.al.us; Harris, Jonah
Subject: CERCLA Off-Site Acceptability of Chemical Waste Management, Emelle, AL

Good Morning Mark,

Chemical Waste Management, Emelle, Alabama is acceptable to receive waste regulated by the CERCLA Off-Site Rule. The EPA advises you to contact us within 60 days to check for continued acceptability.

Thanks,

Paula A Whiting
Environmental Engineer
Hazardous Waste Enforcement and Compliance Section
Enforcement and Compliance Branch
Resource Conservation and Restoration Division
US Environmental Protection Agency - Region IV
Sam Nunn Atlanta Federal Center
61 Forsyth Street SW, 10th Floor
Atlanta, GA 30303
Phone: 404-562-9277
FAX: 404-562-8566

NOTE: This message and any attachments from the U.S. Environmental Protection Agency may contain CONFIDENTIAL and legally protected information. If you are not the addressee or the intended recipient, please do not read, copy, use or disclose this communication to others. Also, please notify the sender by replying to this message and then delete it from your system.

From: Knighton, Mark Jack [mailto:mmknig1@eastman.com]
Sent: Monday, September 19, 2016 11:29 AM
To: Scully, Pam ; Whiting, Paula
Cc: Macolly, Gayle ; Mike Price ; Roper, Laurie Ann
Subject: Impacted Soil

Good morning,

Solutia Inc., a subsidiary of Eastman Chemical in order to comply with the Final Remedial Design Report is notifying you that we will be shipping contaminated soil (profile BK3714) off site to Waste Management Emelle Al (ALD000622464) starting September 26, 2016 and intermittently to WM – Emelle for the next 60 days which will take us to November 25, 2016.

Also, we will potentially ship profile CF6400 to Three Corners Landfill in Piedmont AL (ALR000036343) during this time as well.

Please let me know if you need any additional information.

Thank you for your time and help in this matter.

Have a great day.

Mark

Work Safe, Home Safe

Mark J. Knighton, CSP

HSES Specialist
702 Clydesdale Ave.
Anniston, AL 36201
Office (256) 231-8549
Cell (256) 282-6292
mmknig1@eastman.com

Stevenson, Kelly

From: Whiting, Paula <Whiting.Paula@epa.gov> on behalf of R4CERCLA_OffsiteContact <R4CERCLA_OffsiteContact@epa.gov>
Sent: Friday, November 18, 2016 2:38 PM
To: Knighton, Mark Jack; Scully, Pam
Cc: Macolly Harris, Gayle; Michael Price; Roper, Laurie Ann; BBarber@adem.state.al.us; Harris, Jonah
Subject: CERCLA Off-Site Acceptability of Chemical Waste Management, Emelle, AL

Good Afternoon Mark,

Happy Thanksgiving!

Chemical Waste Management, Emelle, Alabama is acceptable to receive waste regulated by the CERCLA Off-Site Rule. The EPA advises you to contact us within 60 days to check for continued acceptability.

Thanks,

Paula A Whiting
R4 CERCLA Regional Off-Site Contact
Hazardous Waste Enforcement and Compliance Section
Enforcement and Compliance Branch
Resource Conservation and Restoration Division
US Environmental Protection Agency - Region IV
Sam Nunn Atlanta Federal Center
61 Forsyth Street SW, 10th Floor
Atlanta, GA 30303
Phone: 404-562-9277
FAX: 404-562-8566

Please Respond to R4CERCLA_OffSiteContact@epa.gov

NOTE: This message and any attachments from the U.S. Environmental Protection Agency may contain CONFIDENTIAL and legally protected information. If you are not the addressee or the intended recipient, please do not read, copy, use or disclose this communication to others. Also, please notify the sender by replying to this message and then delete it from your system.

From: Knighton, Mark Jack [mailto:mmknig1@eastman.com]
Sent: Friday, November 18, 2016 9:03 AM
To: Scully, Pam ; Whiting, Paula
Cc: Macolly Harris, Gayle ; Mike Price ; Roper, Laurie Ann
Subject: Impacted Soil

Good morning,

Solutia Inc., a subsidiary of Eastman Chemical in order to comply with the Final Remedial Design Report is notifying you that we will be shipping contaminated soil (profile BK3714) off site to Waste Management Emelle Al (ALD000622464) starting November 26, 2016 and intermittently to WM – Emelle for the next 60 days which will take us to January 25, 2017.

Also, we will potentially ship profile CF6400 to Three Corners Landfill in Piedmont AL (ALR000036343) during this time as well.

Please let me know if you need any additional information.

Thank you for your time and help in this matter.

Have a great weekend.

Mark

Work Safe, Home Safe

Mark J. Knighton, CSP

HSES Specialist
702 Clydesdale Ave.
Anniston, AL 36201
Office (256) 231-8549
Cell (256) 282-6292
mmknig1@eastman.com



APPENDIX V

CONTRACTOR DAILY REPORTS AND WEEKLY MEETING MINUTES

APPENDIX V1

Taylor Corporation Daily Reports

Solutia OU-3 Remediation Action

Day # 1 Construction Daily Work Report

Project Number/Name:	Solutia OU-3 Remediation Action PO# 42557985
Safety meeting topic:	
Date/Day	Wednesday 6/24/15

Activities/Deliveries

Permit Acquired Today:
Air Monitoring results today:
Temporary Facilities

- **Install Traffic control signage along hwy. 202**

EQUIPMENT	HOURS	EQUIPMENT	HOURS
Truck with air hammer	4		

Labor

NAME	OCCUPATION	START TIME:	STOP TIME:
Jason Joiner		8:00 a.m.	12:00 p.m.
Alabama barricade		8:00 a.m.	12:00 p.m.
Total Crew Hours for today	12		
Total Crew Hours Cumulative	12		

Details of Hauling/weight ticket # and tons/

EQUIPMENT	LOAD COUNT	DESCRIPTION	ORIGIN	DESTINATION

Weather Report

Sunny/Hot High 97, Low 72

Randy Goodwin

Solutia OU-3 Remediation Action

Day # 2 Construction Daily Work Report

Project Number/Name:	Solutia OU-3 Remediation Action PO# 42557985
Safety meeting topic:	
Date/Day	6/25/15 Thursday

Activities/Deliveries

Permit Acquired Today: Excavation
Air Monitoring results today:
Temporary Facilities

- Install fence posts and gates for construction entrance/exits
- One office trailer delivered

EQUIPMENT	HOURS	EQUIPMENT	HOURS

Labor

NAME	OCCUPATION	START TIME:	STOP TIME:
Ellis Bennet		8:00	1:00
Siberton fence		8:00	1:00
Action	Job trailer	8:00	10:00
Total Crew Hours for today	12		
Total Crew Hours Cumulative	24		

Details of Hauling/weight ticket # and tons/

EQUIPMENT	LOAD COUNT	DESCRIPTION	ORIGIN	DESTINATION

Weather Report

Sunny/Hot High 96/Low 71

Randy Goodwin

Day # 3 Construction Daily Work Report

Project Number/Name:	Solutia OU-3 Remediation Action PO# 42557985
Safety meeting topic:	
Date/Day	6/26/15 Friday

Activities/Deliveries

Permit Acquired Today:
Air Monitoring results today:
Temporary Facilities

- Complete installing 16ft gates on entrance/exit
- Setup office trailer

EQUIPMENT	HOURS	EQUIPMENT	HOURS

Labor

NAME	OCCUPATION	START TIME:	STOP TIME:
Jason Joiner		7:30	4:30
Siberton fence		8:00	4:00
Action	Trailer	8:00	2:00
Total Crew Hours for today	23		
Total Crew Hours Cumulative	47		

Details of Hauling/weight ticket # and tons/

EQUIPMENT	LOAD COUNT	DESCRIPTION	ORIGIN	DESTINATION

Weather Report

Sunny/Hot High 89/Low 75

Randy Goodwin

Solutia OU-3 Remediation Action

Day # 4 Construction Daily Work Report

Project Number/Name:	Solutia OU-3 Remediation Action PO# 42557985
Safety meeting topic:	
Date/Day	6/29/15 Monday

Activities/Deliveries

Permit Acquired Today:
Air Monitoring results today:
Mobilization

- Hauled in silt fence, 10oz and 40oz fabric and Bobcat from Taylor office to jobsite

Temporary Facilities

- Moved furniture into office trailer

EQUIPMENT	HOURS	EQUIPMENT	HOURS

Labor

NAME	OCCUPATION	START TIME:	STOP TIME:
Taylor Crew		6:30	4:00
Total Crew Hours for today	57		
Total Crew Hours Cumulative	104		

Details of Hauling/weight ticket # and tons/

EQUIPMENT	LOAD COUNT	DESCRIPTION	ORIGIN	DESTINATION

Weather Report

Sunny/Hot High 89/Low 67

Randy Goodwin

Solutia OU-3 Remediation Action

Day #5 Construction Daily Work Report

Project Number/Name:	Solutia OU-3 Remediation Action PO# 42557985
Safety meeting topic:	Roadway Safety
Date/Day	6/30/15 Tuesday

Activities/Deliveries

Permit Acquired Today:
Air Monitoring results today: See H&S officer
Mobilization

- Move in rented mini-hoe

Removal of Existing Fence

- Remove existing gates and poles at construction entrance/exit

Temporary Facilities

- Install construction entrance/exit at gates

EQUIPMENT	HOURS	EQUIPMENT	HOURS
Bobcat	10		

Labor

NAME	OCCUPATION	START TIME:	STOP TIME:
Taylor Crew		6:30	4:00
Total Crew Hours for today	58.5		
Total Crew Hours Cumulative	162.5		

Details of Hauling/weight ticket # and tons/

EQUIPMENT	LOAD COUNT	DESCRIPTION	ORIGIN	DESTINATION
Stone	**2**	**#24 Modified**	**Mccartney**	**Entrance/exit**
Stone	**3**	**#57 washed**	**McCartney**	**Entrance/exit**
Geofabric	**1,400 sq. ft**			

Weather Report

Randy Hoskins

Solutia OU-3 Remediation Action

Construction Daily Work Report

Day # 16

Project Number/Name:	
Safety Meeting Topic:	
Date:	7-16-15 Thursday

Activities/ Deliveries

Permit Acquired Today:

Air monitor results today:

Specific task working and or accomplished today:

CLEARING AND GRUBBING: cleared on west side of the pcb cell and pulled up some stumps and got them loaded into a roll off can.
SILT FENCE: installed waddles 330' on the east side of the pcb cell and started on the north west side got 90' of waddles installed on that side.
MOBILIZATION: Went and pick up the water truck

EQUIPMENT	HOURS	EQUIPMENT	HOURS
Bobcat	10		
228 track hoe	4		

LABOR

NAME	OCCUPATION	START TIME:	STOP TIME:	HOURS
Randy	Foreman	6:30	4:30	10
Kevin	Laborer	6:30	4:30	10
Frank	Laborer	6:30	4:30	10
Deon	Laborer	6:30	4:30	10
Chris	Laborer	6:30	4:30	10
Jason	Safety	6:30	4:30	10
			Total Crew Hours for Today:	60
			Total Crew Hours Cumulative:	854

Details of Hauling/ Weight ticket # and tons

TRUCK	WEIGHT TICKET # / TONS	LOAD COUNT	ORIGIN	DESTINATION

Weather Report

Partly cloudy High 92 Low 70

X

Randy Goodwin
Foreman

Solutia OU-3 Remediation Action

Construction Daily Work Report

Day # 17

Project Number/Name:	
Safety Meeting Topic:	
Date:	7-17-15 Friday

Activities/ Deliveries

Permit Acquired Today:

Air monitor results today:

Specific task working and or accomplished today:

CLEARING AND GRUBBING: finished up the west side of the pcb cell and took down 2 telephone poles.

EQUIPMENT	HOURS	EQUIPMENT	HOURS
Bobcat	10		
228 track hoe	10		

LABOR

NAME	OCCUPATION	START TIME:	STOP TIME:	HOURS
Randy	Foreman	6:30	4:30	10
Kevin	Laborer	6:30	4:30	10
Frank	Laborer	6:30	4:30	10
Deon	Laborer	6:30	4:30	10
Chris	Laborer	6:30	4:30	10
Jason	Safety	6:30	4:30	10
			Total Crew Hours for Today:	60
			Total Crew Hours Cumulative:	914

Details of Hauling/ Weight ticket # and tons

TRUCK	WEIGHT TICKET # / TONS	LOAD COUNT	ORIGIN	DESTINATION

Weather Report

Cloudy High 91 Low 71

X

Randy Goodwin
Foreman

Solutia OU-3 Remediation Action

Construction Daily Work Report

Day # 18

Project Number/Name:	
Safety Meeting Topic:	
Date:	7-20-15 Monday

Specific task working and or accomplished today:

MOBILIZATION: Got Sakai roller and 39 komatsu dozer on sight. CLEARING AND GRUBBING: Starting clearing th borrow area. Cleared around telephone pole south of pcb cell Installed 30' of waddles for the check dam on west side of the pcb cells and took down 2 more telephone poles. Started blading off haul road to pcb cell to add 24 stone and base to make a haul road

EQUIPMENT	HOURS	EQUIPMENT	HOURS
228 track hoe	10		
Bobcat	10		
39 dozer	6		

LABOR

NAME	OCCUPATION	START TIME:	STOP TIME:	HOURS
Randy	Foreman	6:30	4:30	10
Kevin	Laborer	6:30	4:30	10
Frank	Laborer	6:30	4:30	10
Deon	Laborer	6:30	4:30	10
Chris	Laborer	6:30	4:30	10
Jason	Safety	6:30	4:30	10
			Total Crew Hours for Today:	60
			Total Crew Hours Cumulative:	974

Details of Hauling/ Weight ticket # and tons

TRUCK	WEIGHT TICKET # / TONS	LOAD COUNT	ORIGIN	DESTINATION

Weather Report

Partly sunny	High 96	Low 74

X _____

Randy Goodwin
Foreman

Solutia OU-3 Remediation Action

Construction Daily Work Report

Day # 19

Project Number/Name:	OU-3
Safety Meeting Topic:	3 points of contact climbing on and off equipment
Date:	7-21-15 Tuesday

Activities/ Deliveries Temporary fence panels

Specific task working and or accomplished today:

REMOVAL OF EXISTING FENCE: removed 250' of fence on the south side of the pcb cell,national fence put up temporary fence in its place.
CLEARING AND GRUBBING: cleared on borrow area.
Work on haul road blading it off and cleaning around where we going to add onto the 24" pipe

EQUIPMENT	HOURS	EQUIPMENT	HOURS
228 track hoe	10		
Bobcat	10		
Sakai roller	3		
39 dozer	7		

LABOR

NAME	OCCUPATION	START TIME:	STOP TIME:	HOURS
Randy	Foreman	6:30	4:30	10
Kevin	Laborer	6:30	4:30	10
Frank	Laborer	0:00	0:00	
Deon	Laborer	6:30	4:30	10
Chris	Laborer	6:30	4:30	10
Jason	Safety	6:30	4:30	10
	National Fence	8:30	10:30	2
	National Fence	8:30	10:30	2
			Total Crew Hours for Today:	54
			Total Crew Hours Cumulative:	1,028

Details of Hauling/ Weight ticket # and tons

TRUCK	WEIGHT TICKET # / TONS	LOAD COUNT	ORIGIN	DESTINATION

Weather Report

X

Randy Goodwin
Foreman

Solutia OU-3 Remediation Action

Construction Daily Work Report

Day # 20

Project Number/Name:	OU-3
Safety Meeting Topic:	Make sure to always look behind you and be careful on equipment
Date:	7-22-15 Wednesday

Activities/ Deliveries Construction fence and Herbicide

Specific task working and or accomplished today:

CLEARING AND GRUBBING: Cleared on borrow area. MOBILIZATION: Brought in 270 John Deere track hoe,valvo smooth drum roller and kubota farm tractor with sprayer. HAUL ROAD: started putting 24 stone on haul road. PCB CELL: sprayed herbicide on pcb cell.
TEMPORARY FACILITIES:put up construction fence on south side of the borrow area by the bike trail

EQUIPMENT	HOURS	EQUIPMENT	HOURS
228 track hoe	10	270 track hoe	5
Bobcat	7	39 dozer	10
Sakai roller	2	Kubota farm tractor with sprayer	2.5
Volvo smooth drum roller	2		

LABOR

NAME	OCCUPATION	START TIME:	STOP TIME:	HOURS
Randy	Foreman	6:30	4:30	10
Kevin	Laborer	6:30	4:30	10
Frank	Laborer	6:30	4:30	10
Deon	Laborer	6:30	4:30	10
Chris	Laborer	6:30	4:30	10
Jason	Safety	6:30	4:30	10
Tommy Taylor		8:00	10:30	2
Tuner surveyor	2 guys	7:00	4:00	18
			Total Crew Hours for Today:	80
			Total Crew Hours Cumulative:	1,108

Details of Hauling/ Weight ticket # and tons

TRUCK	WEIGHT TICKET # / TONS	LOAD COUNT	ORIGIN	DESTINATION
Taylor dump truck	#000609474/22.34 tons	1	McCartney	Haul road
Taylor dump truck	#000609504/20.20 tons	2	McCartney	Haul road
Taylor dump truck	#000609487/21.29 tons	3	McCartney	Haul road
Taylor dump truck	#000609523/22.82 tons	4	McCartney	Haul road
Taylor dump truck	#000609461/22.42 tons	5	McCartney	Haul road

Weather Report

Partly cloudy High 91 Low 74

X

Randy Goodwin
Foreman

Solutia OU-3 Remediation Action

Construction Daily Work Report

Day # 21

Project Number/Name:	OU-3
Safety Meeting Topic:	Road traffic
Date:	7-23-15 Thursday

Activities/ Deliveries

Specific task working and or accomplished today:

CLEARING AND GRUBBING: Cleared on borrow area. HAUL ROAD: put down load of 24 stone and 3 loads of base and cut down bad hill before pcb cell and started filling in the hole below,down by temporary fence outside pcb cell until it started raining.(1hr and a half rain and lightning delay)then got both track hoe's back clearing to wet to work on the haul road.

EQUIPMENT	HOURS	EQUIPMENT	HOURS
228 track hoe	10	39 dozer	7
270 track hoe	10	Sakai roller	3
Bobcat	2		
Valvo smooth drum roller	7		

LABOR

NAME	OCCUPATION	START TIME:	STOP TIME:	HOURS
Randy	Foreman	6:30	4:30	10
Kevin	Laborer	6:30	4:30	10
Frank	Laborer	6:30	4:30	10
Deon	Laborer	6:30	4:30	10
Chris	Laborer	6:30	4:30	10
Jason	Safety	6:30	4:30	10
			Total Crew Hours for Today:	60
			Total Crew Hours Cumulative:	1,168

Details of Hauling/ Weight ticket # and tons

TRUCK	WEIGHT TICKET # / TONS	LOAD COUNT	ORIGIN	DESTINATION
Taylor dump truck	000609541/21.50 tons	1	McCartney	Haul road (24 stone)
Taylor dump truck	16730234/25.61 tons	2	Vulcan	Haul road (base)
Taylor dump truck	16730240/25.49 tons	3	Vulcan	Haul road (base)
Taylor dump truck	16730243/26.14 tons	4	Vulcan	Haul road (base)

Weather Report

Scattered thunderstorms **High 91** **Low 74**

X

Randy Goodwin
Foreman

Solutia OU-3 Remediation Action

Construction Daily Work Report

Day # 22

Project Number/Name:	OU-3
Safety Meeting Topic:	Home safety
Date:	7-24-15 Friday

Activities/ Deliveries

Specific task working and or accomplished today:

CLEARING AND GRUBBING: cleared on borrow area HAUL ROAD: finished cutting down bad hill on the haul road by the pcb cell and compacting in and put down 3 loads of 24 stone and 2 loads of base on the haul road and rolled in

EQUIPMENT	HOURS	EQUIPMENT	HOURS
228 track hoe	10	39 dozer	5
270 track hoe	10	Sakai roller	5
Bobcat	6		
Valvo smooth drum roller	4		

LABOR

NAME	OCCUPATION	START TIME:	STOP TIME:	HOURS
Randy	Foreman	6:30	4:30	10
Kevin	Laborer	6:30	4:30	10
Frank	Laborer	6:30	4:30	10
Deon	Laborer	6:30	4:30	10
Chris	Laborer	6:30	4:30	10
Jason	Safety	6:30	4:30	10
			Total Crew Hours for Today:	60
			Total Crew Hours Cumulative:	1,228

Details of Hauling/ Weight ticket # and tons

TRUCK	WEIGHT TICKET # / TONS	LOAD COUNT	ORIGIN	DESTINATION
Taylor dump truck	000609676/21.77 tons	1	McCartney	Haul road (24 stone)
Taylor dump truck	000609697/19.87 tons	2	McCartney	Haul road (24 stone)
Taylor dump truck	000609657/21.41 tons	3	McCartney	Haul road (24 stone)
Taylor dump truck	16730246/25.25 tons	4	Vulcan	Haul road (base)
Taylor dump truck	16730248/26.00 tons	5	Vulcan	Haul road (base)

Weather Report

Chance of thunderstorms	**High 90**	**Low 70**

X

Randy Goodwin
Foreman

Solutia OU-3 Remediation Action

Construction Daily Work Report

Day # 23

Project Number/Name:	OU-3
Safety Meeting Topic:	Security
Date:	7-27-15 Monday

Activities/ Deliveries

Specific task working and or accomplished today:

CLEARING AND GRUBBING: cleared on borrow area. HAUL ROAD: put 3 loads of base down on haul road and rolled in. TEMPORARY FACILITIES: put up 200' of construction fence on south side of borrow area at the bike trail entrance.

EQUIPMENT	HOURS	EQUIPMENT	HOURS
228 track hoe	10	Sakai roller	0
270 track hoe	10		
Bobcat	10		
Valvo smooth roller	7		

LABOR

NAME	OCCUPATION	START TIME:	STOP TIME:	HOURS
Randy	Foreman	6:30	4:30	10
Kevin	Laborer	6:30	4:30	10
Frank	Laborer	6:30	4:30	10
Deon	Laborer	6:30	4:30	10
Chris	Laborer	6:30	4:30	10
Jason	Safety	6:30	4:30	10
			Total Crew Hours for Today:	60
			Total Crew Hours Cumulative:	1,288

Details of Hauling/ Weight ticket # and tons

TRUCK	WEIGHT TICKET # / TONS	LOAD COUNT	ORIGIN	DESTINATION
Taylor dump truck	16730272/26.39 tons	1	Vulcan	Haul road (base)
Taylor dump truck	16730276/25.43 tons	2	Vulcan	Haul road (base)
Taylor dump truck	16730280/26.28 tons	3	Vulcan	Haul road (base)

Weather Report

Mostly sunny **High 96** **Low 75**

X

Randy Goodwin
Foreman

Solutia OU-3 Remediation Action

Construction Daily Work Report

Day # 24

Project Number/Name:	OU-3
Safety Meeting Topic:	Overhead hazards (power lines)
Date:	7-28-15 Tuesday

Activities/ Deliveries 16 cross ties

Specific task working and or accomplished today:

CLEARING AND GRUBBING: cleared on borrow area. PCB CELL: recut the grass on pcb cell on sections that we have to put herbicide back on it

EQUIPMENT	HOURS	EQUIPMENT	HOURS
228 track hoe	10		
270 track hoe	10		
Bobcat	5		

LABOR

NAME	OCCUPATION	START TIME:	STOP TIME:	HOURS
Randy	Foreman	6:30	4:30	10
Kevin	Laborer	6:30	4:30	10
Frank	Laborer	6:30	4:30	10
Deon	Laborer	6:30	4:30	10
Chris	Laborer	6:30	4:30	10
Jason	Safety	6:30	4:30	10
Ellis		12:30	2:30	2
			Total Crew Hours for Today:	62
			Total Crew Hours Cumulative:	1,350

Details of Hauling/ Weight ticket # and tons

TRUCK	WEIGHT TICKET # / TONS	LOAD COUNT	ORIGIN	DESTINATION

Weather Report

Mostly sunny	**High 96**	**Low 75**

X

Randy Goodwin
Foreman

Solutia OU-3 Remediation Action

Construction Daily Work Report

Day # 25

Project Number/Name:	OU-3
Safety Meeting Topic:	Physical fitness
Date:	7-29-15 Wednesday

Activities/ Deliveries Concrete box,24"cmp pipe,36" concrete pipe

Specific task working and or accomplished today:

CLEARING AND GRUBBING:cleared on borrow area. PCB CELLS: started spraying herbicide on section that haven't died yet until it started raining

EQUIPMENT	HOURS	EQUIPMENT	HOURS
228 track hoe	9		
270 track hoe	9		
Bobcat	2		

LABOR

NAME	OCCUPATION	START TIME:	STOP TIME:	HOURS
Randy	Foreman	6:30		
Kevin	Laborer	6:30		
Frank	Laborer	6:30		
Deon	Laborer	6:30		
Chris	Laborer	6:30		
Jason	Safety	6:30		
Ellis		10:30	12:30	2
			Total Crew Hours for Today:	
			Total Crew Hours Cumulative:	

Details of Hauling/ Weight ticket # and tons

TRUCK	WEIGHT TICKET # / TONS	LOAD COUNT	ORIGIN	DESTINATION

Weather Report

Partly cloudy High 93 Low74

Randy Goodwin

Solutia OU-3 Remediation Action

Construction Daily Work Report

Day # 26

Project Number/Name:	OU-3
Safety Meeting Topic:	Heat stress
Date:	7-30-15 Thursday

Activities/ Deliveries

Specific task working and or accomplished today:

CLEARING AND GRUBBING: cleared on borrow area. PCB CELL: finished up putting herbicide on areas with green grass. HAUL ROAD: installed concrete box on existing 24"pipe and installed 1 joint of new 24" cmp pipe out of the box and backfilled with 5 dump truck loads of dirt from sediment pond from borrow area

EQUIPMENT	HOURS	EQUIPMENT	HOURS
228 track hoe	10		
270 track hoe	10		
Sakai roller	3		
Bobcat	6		

LABOR

NAME	OCCUPATION	START TIME:	STOP TIME:	HOURS
Randy	Foreman	6:30	4:30	10
Kevin	Laborer	6:30	4:30	10
Frank	Laborer	6:30	4:30	10
Deon	Laborer	6:30	4:30	10
Chris	Laborer	6:30	4:30	10
Jason	Safety	6:30	2:30	8
Sonny's Crew. Taylor corp	5 guys total	7:30	2:30	35
			Total Crew Hours for Today:	93
			Total Crew Hours Cumulative:	1,505

Details of Hauling/ Weight ticket # and tons

TRUCK	WEIGHT TICKET # / TONS	LOAD COUNT	ORIGIN	DESTINATION
Taylor dump truck	18 tons	1	Borrow area	Haul road/CMP Installation
Taylor dump truck	18 tons	2	Borrow area	Haul road/CMP Installation
Taylor dump truck	18 tons	3	Borrow area	Haul road/CMP Installation
Taylor dump truck	18 tons	4	Borrow area	Haul road/CMP Installation
Taylor dump truck	18 tons	5	Borrow area	Haul road/CMP Installation

Weather Report

Partly cloudy High 92 Low 69

Randy Hodkin

Solutia OU-3 Remediation Action

Construction Daily Work Report

Day # 27

Project Number/Name:	OU-3
Safety Meeting Topic:	Flying debris
Date:	7-31-15 Friday

Activities/ Deliveries

Specific task working and or accomplished today:

CLEARING AND GRUBBING: cleared on borrow area. HAUL ROAD: finished up haul road with 24 stone and base.

EQUIPMENT	HOURS	EQUIPMENT	HOURS
228 track hoe	10	Valvo smooth roller	6
270 track hoe	10		
Bobcat	10		
Sakai roller	2		

LABOR

NAME	OCCUPATION	START TIME:	STOP TIME:	HOURS
Randy	Foreman	6:30	4:30	10
Kevin	Laborer	6:30	4:30	10
Frank	Laborer	6:30	4:30	10
Deon	Laborer	6:30	4:30	10
Chris	Laborer	6:30	4:30	10
Jason	Safety	6:30	4:30	10
			Total Crew Hours for Today:	60
			Total Crew Hours Cumulative:	1,565

Details of Hauling/ Weight ticket # and tons

TRUCK	WEIGHT TICKET # / TONS	LOAD COUNT	ORIGIN	DESTINATION
Taylor dump truck	000610108/21.55 tons	1	McCartney	Haul road (24 stone)
Taylor dump truck	000610125/21.61 tons	2	McCartney	Haul road (24 stone)
Taylor dump truck	16730430/24.13 tons	3	Vulcan	Haul road (base)
Taylor dump truck	16730438/24.26 tons	4	Vulcan	Haul road (base)
Taylor dump truck	16730439/25.82 tons	5	Vulcan	Haul road (base)

Weather Report

Sunny High 93 Low 66

Randy Goodwin

Solutia OU-3 Remediation Action

Construction Daily Work Report

Day # 28

Project Number/Name:	OU-3
Safety Meeting Topic:	PPe selection
Date:	8-3-15 Monday

Lowes delivered cross ties Mechanic worked on water truck

Activities/ Deliveries

Specific task working and or accomplished today:
Clearing @ borrow site building decon pit installing silt fence

EQUIPMENT	HOURS	EQUIPMENT	HOURS
		Bobcat	8
		Komatsu excavator	8
		John Deere excavator	8
		Water truck	1

LABOR

NAME	OCCUPATION	START TIME:	STOP TIME:	HOURS
Sonny	Foreman	6:30	4:30	9.5
Chris	Laborer	6:30	4:30	9.5
Frank	Laborer	6:30	4:30	9.5
Deon	Laborer	6:30	4:30	9.5
Kevin	Laborer	Out		
Jason	Safety	6:30	4:30	9.5
			Total Crew Hours for Today:	47.5
			Total Crew Hours Cumulative:	1,612.50

Details of Hauling/ Weight ticket # and tons

TRUCK	WEIGHT TICKET # / TONS	LOAD COUNT	ORIGIN	DESTINATION
N/a				

Weather Report

Hot/Sunny High 95

Randy Goodwin

Solutia OU-3 Remediation Action

Construction Daily Work Report

Day # 29

Project Number/Name:	OU-3
Safety Meeting Topic:	
Date:	8-4-15 Tuesday

Tc del roller kronospan rep Garrett trk service looked at water trk Tc mech on water trk Clearing

Activities/ Deliveries Bldg d-con pad Installing silt fence

Specific task working and or accomplished today:

EQUIPMENT	HOURS	EQUIPMENT	HOURS
John Deere ex	8		
Komatsu ex	8		
Bobcat	8		

LABOR

NAME	OCCUPATION	START TIME:	STOP TIME:	HOURS
Randy	Foreman	6:30	4:30	
Kevin	Laborer	6:30	4:30	
Frank	Laborer	6:30	4:30	
Deon	Laborer	6:30	4:30	
Chris	Laborer	6:30	4:30	
Jason	Safety	6:30	4:30	
			Total Crew Hours for Today:	47.5
			Total Crew Hours Cumulative:	1,660

Details of Hauling/ Weight ticket # and tons

TRUCK	WEIGHT TICKET # / TONS	LOAD COUNT	ORIGIN	DESTINATION
N/a				

Weather Report

Hot/ Sunny. High 97/Low 75

Randy Goodwin

Solutia OU-3 Remediation Action

Construction Daily Work Report

Day # 30

Project Number/Name:	OU-3
Safety Meeting Topic:	Environmental safety
Date:	8-5-15 Wednesday

Tc delivered komatsu 200&tractor Tc mech replaced teeth on jd270

Activities/ Deliveries Clean up @ borrow site Building decon pad ✓

Specific task working and or accomplished today:

EQUIPMENT	HOURS	EQUIPMENT	HOURS
Jd 270	8		
Komatsu 228	8		
Bobcat	8		
Water truck	8		

LABOR

NAME	OCCUPATION	START TIME:	STOP TIME:	HOURS
Randy	Foreman	Off		
Kevin	Laborer	6:30	4:30	9.5
Frank	Laborer	6:30	4:30	9.5
Deon	Laborer	6:30	4:30	9.5
Chris	Laborer	6:30	4:30	9.5
Jason	Safety	6:30	4:30	9.5
Sonny	Foreman	6:30	4:30	9.5
Bud	Foreman	6:30	2:30	7.5
				64.5
			Total Crew Hours Cumulative:	1,724.50

Details of Hauling/ Weight ticket # and tons

TRUCK	WEIGHT TICKET # / TONS	LOAD COUNT	ORIGIN	DESTINATION
K w dump	43960lb 21.98 tons	57 stone 1	McCartney quarry	PCB Decon Pad
K w dump	43820lb 21.91 tons	57 stone. 2	McCartney quarry	PCB Decon Pad
K w dump	42060lb 21.03 tons	24 stone 1	McCartney quarry	PCB Decon Pad

Weather Report

Upper 60's am. Mid 90's. Pm

Randy Goodwin

Solutia OU-3 Remediation Action

Construction Daily Work Report

Day # 31

Project Number/Name:	OU-3
Safety Meeting Topic:	Communicaton
Date:	8-6-15 Thursday

Activities/ Deliveries

Specific task working and or accomplished today:

Continued clearing at borrow area. Continued construction of PCB cell decon pad. (Dug and back filled well pads for GW)

EQUIPMENT	HOURS	EQUIPMENT	HOURS
Bobcat	8		
Water Truck	4		
Komatsu 220	5		
John Deere	6		

LABOR

NAME	OCCUPATION	START TIME:	STOP TIME:	HOURS
Sonnie	Foreman	6:30	10:00	3.5
Kevin	Laborer	6:30	4:30	10
Frank (4.5 GW Dig)	Laborer	6:30	4:30	10
Deon	Laborer	6:30	4:30	10
Chris	Laborer	6:30	4:30	10
Jason	Safety	6:30	4:30	10
Bud (4.5 GW Dig)	Operator	6:30	2:30	8
			Total Crew Hours for Today:	61.5
			Total Crew Hours Cumulative:	1,786.00

Details of Hauling/ Weight ticket # and tons

TRUCK	WEIGHT TICKET # / TONS	LOAD COUNT	ORIGIN	DESTINATION
Taylor Dump	610583	24 Stone 1	McCartney	PCB Cell Decon Pad

Weather Report

Hi 85 Low 72 ,Clear with a chance of rain.

Solutia OU-3 Remediation Action

Construction Daily Work Report

Day # 32

Project Number/Name:	OU-3
Safety Meeting Topic:	**Back to School. Be mindful of Bus traffic and childen**
Date:	8-7-15 Friday

Activities/ Deliveries

Specific task working and or accomplished today:

Began work on #2 decon pad. Continued reshuffling of trees on borrow area for chipping. Repair driveway on gate #2.

EQUIPMENT	HOURS	EQUIPMENT	HOURS
Water Truck	3		
Bobcat	7		
Komatsu 78	3		
Jon Deere 227	7		

LABOR

NAME	OCCUPATION	START TIME:	STOP TIME:	HOURS
Randy	Foreman			
Kevin	Laborer	6:30	4:30	10
Frank	Laborer	6:30	4:30	10
Deon	Laborer	6:30	4:30	10
Chris	Laborer	6:30	4:30	10
Jason	Safety	6:30	4:30	10
Bud	Operator	6:30	4:30	10
			Total Crew Hours for Today:	70
			Total Crew Hours Cumulative:	

Details of Hauling/ Weight ticket # and tons

TRUCK	WEIGHT TICKET # / TONS	LOAD COUNT	ORIGIN	DESTINATION
Taylor Dump	16730661	DGA Base 1	Vulcan	PCB Cell Decon Pad
Taylor Dump	16730668	DGA Base 2	Vulcan	PCB Cell Decon Pad

Weather Report

Hi 90 Low 68, cloudy with a chance of thunder storms in th afternoon.

Solutia OU-3 Remediation Action

Construction Daily Work Report

Day # 33

Project Number/Name:	OU-3
Safety Meeting Topic:	Job site traffic
Date:	8-10-15 Monday

Activities/ Deliveries 2 loads of 24 stone 1 load of base

Specific task working and or accomplished today:

CLEARING AND GRUBBING: started moving brush pile on borrow area up to south east side. DECON PAD: finished up decon pad by construction entrance to job trailer.

EQUIPMENT	HOURS	EQUIPMENT	HOURS
200 track hoe	8		
270 track hoe	8		
Bobcat	10		
78 mini hoe	10		

LABOR

NAME	OCCUPATION	START TIME:	STOP TIME:	HOURS
Randy	Foreman	6:30	4:30	10
Kevin	Laborer	6:30	4:30	10
Frank	Laborer	6:30	4:30	10
Deon	Laborer	6:30	4:30	10
Chris	Laborer	6:30	4:30	10
Jason	Safety	6:30	4:30	10
Sunny crew	Total 5 guys	6:30	2:30	40
			Total Crew Hours for Today:	100
			Total Crew Hours Cumulative (Sonny Crew)	40
			Total Crew Hours Cumulative (Randy)	1,916

Details of Hauling/ Weight ticket # and tons

TRUCK	WEIGHT TICKET # / TONS	LOAD COUNT	ORIGIN	DESTINATION
Taylor dump truck	000610853/23.90 tons	1	McCartney	Decon pad
Taylor dump truck	000610874/23.81 tons	2	McCartney	Decon pad
Taylor dump truck	16730693/21.73 tons	3	Vulcan	Decon pad

Weather Report

Mostly cloudy **High 93** **Low 72**

Randy Goodwin

Solutia OU-3 Remediation Action

Construction Daily Work Report

Day # 34

Project Number/Name:	OU-3
Safety Meeting Topic:	Site acclimation
Date:	8-11-15 Tuesday

Activities/ Deliveries 1 load of base

Specific task working and or accomplished today:

CLEARING AND GRUBBING: continued moving brush pile and restacking it south east corner of borrow area bladed off entrance road to borrow area.
CONSTRUCTION ENTRANCE:fixed bad spots on road and around job trailer. AUTOCLAVE: shot grade around autoclave to find low spots and break points

EQUIPMENT	HOURS	EQUIPMENT	HOURS
270 track hoe	10		
200 track hoe	8		
Bobcat	8		
39 dozer	6		

LABOR

NAME	OCCUPATION	START TIME:	STOP TIME:	HOURS
Randy	Foreman	6:30	4:30	10
Kevin	Laborer	6:30	4:30	10
Frank	Laborer	6:30	4:30	10
Deon	Laborer	6:30	4:30	10
Chris	Laborer	6:30	4:30	10
Jason	Safety	6:30	4:30	10
			Total Crew Hours for Today:	60
			Total Crew Hours Cumulative (Sonny	Another job
			Total Crew Hours Cumulative:	2,025

Details of Hauling/ Weight ticket # and tons

TRUCK	WEIGHT TICKET # / TONS	LOAD COUNT	ORIGIN	DESTINATION
Taylor dump truck	16730724/24.48 tons	1	Vulcan	Construction entrance

Weather Report

Sunny High 90 Low 67

Randy Goodwin

17

Solutia OU-3 Remediation Action

Construction Daily Work Report

Day # 35

Project Number/Name:	OU-3
Safety Meeting Topic:	Being struck by equipment
Date:	8-12-15 Wednesday

Activities/ Deliveries 3 loads of class 1 rip rap

Specific task working and or accomplished today:

MOBILIZATION: Taylor brought in disc for tractor and a Takeuchi mini hoe,chipping crew brought in the chipper and 210 track hoe. CLEARING AND GRUBBING:got the brush pile moved and started cleaning up smaller brush. BORROW AREA:started stripping topsoil off and started on rip rap ditch

EQUIPMENT	HOURS	EQUIPMENT	HOURS
200 track hoe	10		
270 track hoe	10		
39 dozer	10		

LABOR

NAME	OCCUPATION	START TIME:	STOP TIME:	HOURS
Randy	Foreman	6:30	4:30	10
Kevin	Laborer	6:30	4:30	10
Frank	Laborer	6:30	4:30	10
Deon	Laborer	6:30	4:30	10
Chris	Laborer	6:30	4:30	10
Jason	Safety	6:30	4:30	10
Bud	Operator	6:30	2:30	8
Chipping crew	2 guys	10:00	3:30	11
			Total Crew Hours for Today:	79
			Total Crew Hours Cumulative:	2,104

Details of Hauling/ Weight ticket # and tons

TRUCK	WEIGHT TICKET # / TONS	LOAD COUNT	ORIGIN	DESTINATION
Taylor dump truck	000611023/23.57 tons	1	McCartney	Borrow area (rip rap ditch)
Taylor dump truck	000611041/22.81 tons	2	McCartney	Borrow area (rip rap ditch)
Taylor dump truck	000611042/22.73 tons	3	McCartney	Borrow area (rip rap ditch)

Weather Report

Sunny High 89 Low 63

Randy Goodwin



Solutia OU-3 Remediation Action

Construction Daily Work Report

Day # 36

Project Number/Name:	OU-3
Safety Meeting Topic:	Struck by hazards
Date:	8-13-15 Thursday

Activities/ Deliveries

Specific task working and or accomplished today:

CLEARING AND GRUBBING:finished cleaning up small brush piles and putting it in the new stack. BORROW AREA:Chippers started chipping brush pile.We continued stripping top soil of borrow area,and continued on the rip rap ditch east side of the borrow area.(100'longx11'widex3'deep with rip rap and 10 oz fabric)

EQUIPMENT	HOURS	EQUIPMENT	HOURS
270 track hoe	10	39 dozer	10
Bobcat	10		
Takeuchi mini hoe	10		
200 track hoe	8		

LABOR

NAME	OCCUPATION	START TIME:	STOP TIME:	HOURS
Randy	Foreman	6:30	4:30	10
Kevin	Laborer	6:30	4:30	10
Frank	Laborer	6:30	4:30	10
Deon	Laborer	6:30	4:30	10
Chris	Laborer	6:30	4:30	10
Jason	Safety	6:30	1:00	6.5
Bud	Operator	6:30	2:30	8
Chipping crew	2 guys	6:30	4:30	20
			Total Crew Hours for Today:	84.5
			Total Crew Hours Cumulative:	2,104

Details of Hauling/ Weight ticket # and tons

TRUCK	WEIGHT TICKET # / TONS	LOAD COUNT	ORIGIN	DESTINATION

Weather Report

Sunny High 91 Low 68

Randy Goodwin

Solutia OU-3 Remediation Action

Construction Daily Work Report **Day #** 37

Project Number/Name:	OU-3
Safety Meeting Topic:	PCB awareness
Date:	8-14-15 Friday

Activities/ Deliveries 4 light plants,2 plate tamps,mini hoe 2 loads of base

Specific task working and or accomplished today:

MOBILIZATION: moved in mini hoe,pick up rolls of plastic,and tools for the autoclave. Set up caution tape and barrels in our work zone at the autoclave and got 2 cans move down to autoclave also. BORROW AREA:continued chipping brush pile

EQUIPMENT	HOURS	EQUIPMENT	HOURS
270 track hoe	10		
200 track hoe	8		

LABOR

NAME	OCCUPATION	START TIME:	STOP TIME:	HOURS
Randy	Foreman	6:30	4:30	10
Kevin	Laborer	6:30	4:30	10
Frank	Laborer	6:30	4:30	10
Deon	Laborer	6:30	4:30	10
Chris	Laborer	6:30	4:30	10
Jason	Safety	6:30	4:30	10
Bud	Operator	6:30	2:30	8
Chipping crew	2 guys	6:30	4:30	20
			Total Crew Hours for Today:	88
			Total Crew Hours Cumulative:	2,192

Details of Hauling/ Weight ticket # and tons

TRUCK	WEIGHT TICKET # / TONS	LOAD COUNT	ORIGIN	DESTINATION
Taylor dump truck	16730867/24.31 tons	1	Vulcan	Job trailor(base for autoclave)
Taylor dump truck	16730866/25.22 tons	2	Vulcan	Job trailor(base for autoclave)

Weather Report

Partly sunny High 89 Low 69

Randy Goodwin

Solutia OU-3 Remediation Action

Construction Daily Work Report

Day # 38

Project Number/Name:	OU-3
Safety Meeting Topic:	Weather
Date:	8-17-15 Monday

Activities/ Deliveries Hammer hoe and 7 loads of base

Specific task working and or accomplished today:

DAY CREW AUTOCLAVE:40'longx9'widex14"deep east side of autoclave then 36'longx10'widex14"deep south side of the autoclave and under 2 stairs. (Filled up 5 roll off)
NIGHT CREW AUTOCLAVE: 2200 sq feet dug out

EQUIPMENT	HOURS	EQUIPMENT	HOURS
78 mini hoe	24	250 loader	24
Bobcat skid steer	24		
John deer skid steer	24		
Bobcat mini hoe	24		

LABOR

NAME	OCCUPATION	START TIME:	STOP TIME:	HOURS
Randy crew	Foreman (5 guys total)	6:00	6:00p	60
Matt	Foreman	6:30	4:30	10
Jason	Safety	6:00	6:00p	12
Bud	Operator	6:30	2:30	8
Chippers	2 guys	6:30	4:30	20
Lance		10:00	6:00p	8
Tony	Truck driver	9:00	6:00	9
Sunny crew + Ellis	7 guys	6:00p	6:00a	84
			Total Crew Hours for Today:	211
			Total Crew Hours Cumulative:	2,403

Details of Hauling/ Weight ticket # and tons

TRUCK	WEIGHT TICKET # / TONS	LOAD COUNT	ORIGIN	DESTINATION
Taylor dump truck	16730884/24.26 tons	1	Vulcan	Autoclave
Taylor dump truck	16730885/24.63 tons	2	Vulcan	Autoclave
Taylor dump truck	16730891/25.21 tons	3	Vulcan	Autoclave
Taylor dump truck	16730892/24.47 tons	4	Vulcan	Autoclave
Taylor dump truck	16730902/24.94 tons	5	Vulcan	Autoclave
Taylor dump truck	16730903/24.34 tons	6	Vulcan	Autoclave
Taylor dump truck	16730908/25.58 tons	7	Vulcan	Autoclave
Taylor dump truck	16730909/25.41 tons	8	Vulcan	Autoclave

Weather Report

Scattered thunderstorms High 83 Low 70

Randy Goodwin

Solutia OU-3 Remediation Action

Construction Daily Work Report

Day # 39

Project Number/Name:	OU-3
Safety Meeting Topic:	Spotters
Date:	8-18-15 Tuesday

Activities/ Deliveries 2 loads of 57 stone and a load of rebar

Specific task working and or accomplished today:
AUTOCLAVE DAY CREW:removed 3,000 sq feet of dirt from autoclave and loaded out into 16 roll off cans between showers.
AUTOCLAVE NIGHT CREW:hammered concrete down and got lil dirt out from under last set of stairs

EQUIPMENT	HOURS	EQUIPMENT	HOURS
Bobcat skid steer	24	250 loader	24
Bobcat mini hoe	24	Hammer hoe	12
78 mini hoe	24	270 track hoe	10
John deer skid steer	24	200 track hoe	8

LABOR

NAME	OCCUPATION	START TIME:	STOP TIME:	HOURS
Randy crew	Foreman (5 guys total)	6:00	6:00p	60
Tony	Truck driver	6:00	6:00p	12
Lance		9:00	8:00p	11
Bud	Operator	6:00	2:30	8.5
Matt	Foreman	6:00	4:30	10.5
Jason	Safety	6:00	6:00p	12
Chippers	2 guys	6:30	4:30	20
Sonny crew + Ellis	7 guys total	6:00p	6:00 AM	84
			Total Crew Hours for Today:	218
			Total Crew Hours Cumulative:	2,621

Details of Hauling/ Weight ticket # and tons

TRUCK	WEIGHT TICKET # / TONS	LOAD COUNT	ORIGIN	DESTINATION
Taylor dump truck	000611413/24 tons	1	McCartney	Autoclave (57 for under drain
Taylor dump truck	000611416/23.87 tons	2	McCartney	Autoclave (57 for under drain

Weather Report

Scattered thunderstorms **High 87** **Low 73**

Randy Goodwin

Solutia OU-3 Remediation Action

Construction Daily Work Report

Day # 40

Project Number/Name:	OU-3
Safety Meeting Topic:	Trips and falls
Date:	8-19-15 Wednesday

Activities/ Deliveries 6 loads of base

Specific task working and or accomplished today:

AUTOCLAVE DAY CREW:got the hammer back running around 8:30 hammered out 8 high spots of concrete and sawed of rebar and I beams that were too high for concrete.Checked grade with epa and golder with string line to make sure we had 12".Started putting in base after lunch and put in 8 loads of base.

AUTOCLAVE NIGHT CREW:put in 6 loads of base and got the south side of autoclave graded and tamped in

EQUIPMENT	HOURS	EQUIPMENT	HOURS
78 mini hoe	24	250 loader	24
Bobcat mini hoe	24	200 track hoe	8
Bobcat skid steer	24	270 track hoe	10
John deer skid steer	24	228 track hoe	16

LABOR

NAME	OCCUPATION	START TIME:	STOP TIME:	HOURS
Randy crew	Foreman (5 guy total)	6:00	6:00p	60
Jason	Safety	6:00	6:00p	12
Bud	Operator	6:00	2:30	8.5
Matt	Foreman	6:00	4:30	10.5
Lance		8:30	4:00	7.5
Chippers	2 guys	6:30	4:30	20
Sunny crew +Ellis	7 guys total	6:00p	6:00a	84
Taylor truck drivers	3 guys(1 in roll off 2 in dump truck	7:00	5:30	16
			Total Crew Hours for Today:	218.5
			Total Crew Hours Cumulative:	2,839.50

Details of Hauling/ Weight ticket # and tons

TRUCK	WEIGHT TICKET # / TONS	LOAD COUNT	ORIGIN	DESTINATION
Taylor dump truck	16730952/24.07 tons	1	Vulcan	Autoclave (base)
Taylor dump truck	16730953/23.67 tons	2	Vulcan	Autoclave (base)
Taylor dump truck	16730955/25.47 tons	3	Vulcan	Autoclave (base)
Taylor dump truck	16730956/24.67 tons	4	Vulcan	Autoclave (base)
Taylor dump truck	16730960/25.00 tons	5	Vulcan	Autoclave (base)
Taylor dump truck	16730961/25.02 tons	6	Vulcan	Autoclave (base)

Weather Report

Scattered thunderstorms. High 87 Low 73

Randy Goodwin



Solutia OU-3 Remediation Action

Construction Daily Work Report

Day # 41

Project Number/Name:	OU-3
Safety Meeting Topic:	Caught between
Date:	8-20-15 Thursday

Activities/ Deliveries 4 loads of base

Specific task working and or accomplished today:

AUTOCLAVE:finished up the south side with base and got tamped in,finished up the east side from autoclave to side walk to top of slope with base got tamped in,finished up the west side from autoclave to building to top of slope got tamped in.Acker electric fixed all ground cables.Brown's concrete started forming and tieing rebar on the east side and west side.

EQUIPMENT	HOURS	EQUIPMENT	HOURS
Bobcat skid steer	12	228 track hoe	7
Bobcat mini hoe	2	250 loader	7
John deer skid steer	6	200 track hoe	8
78 mini hoe	12	270 track hoe	10

LABOR

NAME	OCCUPATION	START TIME:	STOP TIME:	HOURS
Randy Crew	Foreman 5 guys total	6:00a	6:00p	60
Jason	Safety	6:00a	6:00p	12
Bud	Operator	6:00	2:30	8.5
Matt	Foreman	6:00	4:30	10.5
Chippers	2 guys	6:30	4:30	20
Brown's Concrete	8 guys	10:00	7:00p	72
Lance		9:00	3:00p	6
Acker electric	4 guys	7:30	2:30	28
			Total Crew Hours for Today:	217
			Total Crew Hours Cumulative:	3,056.50

Details of Hauling/ Weight ticket # and tons

TRUCK	WEIGHT TICKET # / TONS	LOAD COUNT	ORIGIN	DESTINATION
Taylor dump truck	16730971/24.30 tons	1	Vulcan	Autoclave (base)
Taylor dump truck	16730972/25.32 tons	2	Vulcan	Autoclave (base)
Taylor dump truck	16730987/23.59 tons	3	Vulcan	Autoclave (base)
Taylor dump truck	16730988/24.28 tons	4	Vulcan	Autoclave (base)

Weather Report

Scattered thunderstorms **High 83** **Low 68**

Randy Goodwin

Solutia OU-3 Remediation Action

Construction Daily Work Report

Day # 42

Project Number/Name:	OU-3
Safety Meeting Topic:	Lead by example
Date:	8-21-15 Friday

Activities/ Deliveries

Specific task working and or accomplished today:

AUTOCLAVE:finished grading base on north and west side of the autoclave and tamped in finished the slope and got it tamped in.Layed 3 3" pipes out to the slope for the steam lines.Browns concrete poured 2 sections on the south side of autoclave and one on the west side of the autoclave and formed up and tied rebar on 1 section on the east side and one section on the north side.

EQUIPMENT	HOURS	EQUIPMENT	HOURS
78 mini hoe	11.5	270 track hoe	10
Bobcat skid steer	10	250 loader	8
John deer skid steer	5		
200 track hoe	8		

LABOR

NAME	OCCUPATION	START TIME:	STOP TIME:	HOURS
Randy crew	Foreman 5 guys total	6:00	5:30p	57.5
Jason	Safety	6:00	5:30p	11.5
Bud	Operator	6:00	2:30	8.5
Matt	Foreman	6:00	11:00a	5
Chippers	2 guys	0:00		
Brown's concrete	8 guys	6:00	6:00p	96
Lance		1:00p	4:30p	3.5
			Total Crew Hours for Today:	182
			Total Crew Hours Cumulative:	3,238.50

Details of Hauling/ Weight ticket # and tons

TRUCK	WEIGHT TICKET # / TONS	LOAD COUNT	ORIGIN	DESTINATION

Weather Report

Scattered thunderstorms High 85 Low 67

Randy Goodwin

5

Solutia OU-3 Remediation Action

Construction Daily Work Report

Day # 43

Project Number/Name:	OU-3
Safety Meeting Topic:	Fatigue
Date:	8-22-15 Saturday

Activities/ Deliveries

Specific task working and or accomplished today:

AUTOCLAVE: Brown's concrete poured section on the south side of autoclave and one on the west corner

EQUIPMENT	HOURS	EQUIPMENT	HOURS

LABOR

NAME	OCCUPATION	START TIME:	STOP TIME:	HOURS
Randy	Foreman (5 guys total)			
Jason	Safety	6:00	1:00	7
Brown's concrete	8 guys	6:00	1:00	7
			Total Crew Hours for Today:	14
			Total Crew Hours Cumulative:	3,252.50

Details of Hauling/ Weight ticket # and tons

TRUCK	WEIGHT TICKET # / TONS	LOAD COUNT	ORIGIN	DESTINATION

Weather Report

Scattered thunderstorms	High 90	Low 67

Randy Brown

Solutia OU-3 Remediation Action

Construction Daily Work Report

Day # 44

Project Number/Name:	OU-3
Safety Meeting Topic:	Proper tools for the job
Date:	8-24-15 Monday

Activities/ Deliveries 2 loads of base

Specific task working and or accomplished today:

AUTOCLAVE:Layed under drain at the toe of slope and got backfilled with 57 stone (132'of 2"sch 80 slotted pipe 1,980 sq feet of 6oz fabric and stub out of tee's and 90's over the wall)finished running the 3 3" steam lines down the slopes and stubbed over the wall and 90 down and backfilled.Brown's concrete formed up north of autoclave and some east of autoclave and tied rebar in those sections they poured 2 section on the west side and 1 section on the east side. BORROW AREA:dug out some of the settling pond.

EQUIPMENT	HOURS	EQUIPMENT	HOURS
250 loader	11		
Bobcat skid steer	2		
200 track hoe	8		
270 track hoe	10		

LABOR

NAME	OCCUPATION	START TIME:	STOP TIME:	HOURS
Randy crew	Foreman 5 guys	6:30	5:30	55
Jason	Safety	6:30	8:00p	13.5
Bud	Operator	6:30	2:30	8
Matt	Foreman	6:30	4:30	10
Brown's concrete	8 guys	6:00	9:00p	120
			Total Crew Hours for Today:	206.5
			Total Crew Hours Cumulative:	3,459

Details of Hauling/ Weight ticket # and tons

TRUCK	WEIGHT TICKET # / TONS	LOAD COUNT	ORIGIN	DESTINATION
Taylor dump truck	000611627/22.16 tons	1	McCartney	Autoclave (57 stone)
Taylor dump truck	000611625/21.82 tons	2	McCartney	Autoclave (57 stone)

Weather Report

Clear High 89 Low 61

Randy Mashburn

Solutia OU-3 Remediation Action

Construction Daily Work Report

Day # 45

Project Number/Name:	OU-3
Safety Meeting Topic:	Backing up equipment and trucks
Date:	8-25-15 Tuesday

Activities/ Deliveries 2 rolls 6oz fabric 1 roll of 10oz and silt bags

Specific task working and or accomplished today:
AUTOCLAVE:cleaned up around autoclave.Brown's concrete formed up and tied rebar in for section and poured them sections 2 on the north side and 2 on the east side of the autoclave. BORROW AREA:stripped topsoil and work on the sediment pond.

EQUIPMENT	HOURS	EQUIPMENT	HOURS
270 track hoe	10		
39 dozer	8		
John deer skid steer	8		

LABOR

NAME	OCCUPATION	START TIME:	STOP TIME:	HOURS
Randy	Foreman	6:30	6:30p	12
Jason	Safety	6:30	1:30p	7
Bud	Operator	6:30	2:30	8
Matt	Foreman	6:30	4:30	10
Brown's concrete	8 guys	6:00	6:30p	100
Deon,Kevin,frank	Taylor	6:30	5:00	31.5
Chris	Taylor	6:30	2:00	7.5
			Total Crew Hours for Today:	176
			Total Crew Hours Cumulative:	3,635

Details of Hauling/ Weight ticket # and tons

TRUCK	WEIGHT TICKET # / TONS	LOAD COUNT	ORIGIN	DESTINATION

Weather Report

Sunny High 86 Low 56

Randy Goodwin

Solutia OU-3 Remediation Action

Construction Daily Work Report

Day # 46

Project Number/Name:	OU-3
Safety Meeting Topic:	Do your job and do it safe
Date:	8-26-15 Wednesday

Activities/ Deliveries 24' of 24" class 5 rcp

Specific task working and or accomplished today:

BORROW AREA:Stripped topsoil and chippers moved back in and started chipping. SILT FENCE:put up 305' of silt fence under power line on the west side down the north side to entrance road going up to the borrow area. PCB CELL:disced up the pcb cell all day. AUTOCLAVE: Brown's concrete tied rebar in the last 3 sections on top and got poured on the east and south east side.

EQUIPMENT	HOURS	EQUIPMENT	HOURS
John deer tractor and disc	9		
John deer skid steer	8		
39 dozer	8		
270 track hoe	10		

LABOR

NAME	OCCUPATION	START TIME:	STOP TIME:	HOURS
Randy	Foreman 5 guys	6:30	5:00	52.5
Jason	Safety	9:00	3:00	6
Bud	Operator	6:30	3:00	8.5
Matt	Foreman	6:30	4:30	10
Brown's concrete	8 guys	7:00	5:30	84
Chippers	2 guys	9:00	4:30	15
			Total Crew Hours for Today:	176
			Total Crew Hours Cumulative:	3,811

Details of Hauling/ Weight ticket # and tons

TRUCK	WEIGHT TICKET # / TONS	LOAD COUNT	ORIGIN	DESTINATION

Weather Report

Sunny High 84 Low 60

Randy Jackson

3

Solutia OU-3 Remediation Action

Construction Daily Work Report

Day # 47

Project Number/Name:	OU-3
Safety Meeting Topic:	Right ppe for the right job
Date:	8-27-15 Thursday

Activities/ Deliveries 5 loads of base,3 loads of 24

Specific task working and or accomplished today:

BORROW AREA:stripped topsoil. PCB CELL: started rolling cell down PCB cell got about 3/4 rolled in then identified soft spots. AUTOCLAVE:Brown's concrete tied rebar and poured 3 section on the slopes at autoclave.Started pulling up tops on the expansion joints and put the steps back on. AREA E: Put in 123'x30' pad used 3,690 sq foot of 10 oz fabric on top of fabric put 24 stone topped off with base.

EQUIPMENT	HOURS	EQUIPMENT	HOURS
270 track hoe	8		
John deer skid steer	10		
250 loader	3		
Sakai roller	10		

LABOR

NAME	OCCUPATION	START TIME:	STOP TIME:	HOURS
Randy	Foreman 5 guys	6:30	4:30	50
Jason	Safety	6:30	4:30	10
Bud	Operator	6:30	2:30	8
Matt	Foreman	0:00		
Chippers	2 guys	6:30	4:30	20
Brown's concrete	8 guys	7:30	4:30	72
			Total Crew Hours for Today:	160
			Total Crew Hours Cumulative:	3,971

Details of Hauling/ Weight ticket # and tons

TRUCK	WEIGHT TICKET # / TONS	LOAD COUNT	ORIGIN	DESTINATION
Taylor dump truck	000611998/20.47 tons	1	McCartney	Area E (24 stone)
Taylor dump truck	000612000/22.54 tons	2	McCartney	Area E(24 stone)
Taylor dump truck	000612001/22.11 tons	3	McCartney	Area E(24 stone)
Taylor dump truck	16731198/25.06 tons	4	Vulcan	Area E(base)
Taylor dump truck	16731199/23.66 tons	5	Vulcan	Area E(base)
Taylor dump truck	16731200/24.62 tons	6	Vulcan	Area E(base)
Taylor dump truck	16731211/24.52 tons	7	Vulcan	Area E(base)
Taylor dump truck	16731212/24.45 tons	8	Vulcan	Area E(base)

PAC

Weather Report

Partly cloudy High 88 Low 65

Randy Goodwin

Solutia OU-3 Remediation Action

Construction Daily Work Report

Day # 47

Project Number/Name:	OU-3
Safety Meeting Topic:	Right ppe for the right job
Date:	8-27-15 Thursday

Activities/ Deliveries 5 loads of base,3 loads of 24

Specific task working and or accomplished today:

BORROW AREA:stripped topsoil. PCB CELL: started rolling cell down PCB cell got about 3/4 rolled in then identified soft spots. AUTOCLAVE:Brown's concrete tied rebar and poured 3 section on the slopes at autoclave.Started pulling up tops on the expansion joints and put the steps back on. AREA E: Put in 123'x30' pad used 3,690 sq foot of 10 oz fabric on top of fabric put 24 stone topped off with base.

EQUIPMENT	HOURS	EQUIPMENT	HOURS
270 track hoe	8		
John deer skid steer	10		
250 loader	3		
Sakai roller	10		

LABOR

NAME	OCCUPATION	START TIME:	STOP TIME:	HOURS
Randy	Foreman 5 guys	6:30	4:30	50
Jason	Safety	6:30	4:30	10
Bud	Operator	6:30	2:30	8
Matt	Foreman	0:00		
Chippers	2 guys	6:30	4:30	20
Brown's concrete	8 guys	7:30	4:30	72
			Total Crew Hours for Today:	160
			Total Crew Hours Cumulative:	3,971

Details of Hauling/ Weight ticket # and tons

TRUCK	WEIGHT TICKET # / TONS	LOAD COUNT	ORIGIN	DESTINATION
Taylor dump truck	000611998/20.47 tons	1	McCartney	Area E (24 stone)
Taylor dump truck	000612000/22.54 tons	2	McCartney	Area E(24 stone)
Taylor dump truck	000612001/22.11 tons	3	McCartney	Area E(24 stone)
Taylor dump truck	16731198/25.06 tons	4	Vulcan	Area E(base)
Taylor dump truck	16731199/23.66 tons	5	Vulcan	Area E(base)
Taylor dump truck	16731200/24.62 tons	6	Vulcan	Area E(base)
Taylor dump truck	16731211/24.52 tons	7	Vulcan	Area E(base)
Taylor dump truck	16731212/24.45 tons	8	Vulcan	Area E(base)

Weather Report

Partly cloudy High 88 Low 65

Randy Goodwin

Solutia OU-3 Remediation Action

Construction Daily Work Report

Day # 49

Project Number/Name:	OU-3
Safety Meeting Topic:	Flying debris
Date:	8-29-15 Saturday

Activities/ Deliveries

Specific task working and or accomplished today:

AUTOCLAVE: cleaned of autoclave area and cleaned off asphalt road

EQUIPMENT	HOURS	EQUIPMENT	HOURS
Water truck	4.5		

LABOR

NAME	OCCUPATION	START TIME:	STOP TIME:	HOURS
Randy crew	Foreman 5 guys	6:30	11:00:00a	22.5
Jason	Safety	6:30	11:00:00a	4.5
Chippers	2 guys	6:30	11:00a	9
			Total Crew Hours for Today:	36
			Total Crew Hours Cumulative:	4,141.50

Details of Hauling/ Weight ticket # and tons

TRUCK	WEIGHT TICKET # / TONS	LOAD COUNT	ORIGIN	DESTINATION

Weather Report

Scattered thunderstorms High 83 Low 68

Randy Hawkins

Solutia OU-3 Remediation Action

Construction Daily Work Report

Day # 48

Project Number/Name:	OU-3
Safety Meeting Topic:	House keeping
Date:	8-28-15 Friday

Activities/ Deliveries

Specific task working and or accomplished today:

PCB CELL: finished rolling in the PCB cell then smooth drummed it off,deconed the valvo smooth drum and the John deer tractor and disc. BORROW AREA: stripped topsoil and chipped trees. AUTOCLAVE: Brown's concrete finished pouring the last 3 sections on the slope.Welowered the drain pipe east side on the slope by the steps and run it over the wall and removed caps on all expansion joints on top part of the autoclave and started blowing out the joints and cleaning.

EQUIPMENT	HOURS	EQUIPMENT	HOURS
Valvo smooth drum roller	8		
Sakai roller	2		
270 track hoe	8		
39 dozer	2		

LABOR

NAME	OCCUPATION	START TIME:	STOP TIME:	HOURS
Randy	Foreman	6:30	4:00	9.5
Kevin,frank,deon	Laborer 3 guys	6:30	4:00	28.5
Chris	Labor	6:30	11:00	4.5
Bud	Operator	6:30	2:30	8
Matt	Foreman	0:00		
Chippers	2 guys	6:30	4:30	20
Brown's concrete	8 guys	7:00	3:00	64
			Total Crew Hours for Today:	134.5
			Total Crew Hours Cumulative:	4,105.50

Details of Hauling/ Weight ticket # and tons

TRUCK	WEIGHT TICKET # / TONS	LOAD COUNT	ORIGIN	DESTINATION

Weather Report

Partly sunny High 89 Low 68

Remedy Foreman

Incident Report

*(use this form to report **non-employee** injuries and property damage)*
Please be as accurate as possible. We encourage reporting of all incidents.

Date: 8/28/15 Time of accident: 7:45 PM

Name of person reporting incident (please print): JASON W. JOINER

Street Address 702 CLYSDALE AVE

City ANNISTON State AL Phone #: 256-499-6948

COMPLETE THIS SECTION IF THERE WAS AN INJURY:

Type of Bodily Injury (If any): _____

The injured person(s) is a:

Location of accident: _____

Name(s) of Person(s) injured: _____

_____

Describe exactly what happened: AT Approx. 0630 on 29 AUG 15 I RECEIVED NOTIFICATION THAT THE REMEDIATION GATE #1 HAD BEEN LEFT UNLOCKED AFTER TC CREW HAD LEFT THE SITE FOR THE DAY. THE GAURD WAS INSTRUCTED ~~THE~~ THE GATES ARE TO BE DOUBLE CHECKED BEFORE LEAVING

Signature: _____ Date: 8/31/15

Solutia OU-3 Remediation Action

Construction Daily Work Report

Day # 50

Project Number/Name:	OU-3
Safety Meeting Topic:	Under ground utilities
Date:	8-31-15 Monday

Activities/ Deliveries Sikaflex

Specific task working and or accomplished today:

AUTOCLAVE:Strted putting sikaflex in the expansion joints. BORROW AREA:Stripped topsoil and chippers grinded trees.

EQUIPMENT	HOURS	EQUIPMENT	HOURS
270 track hoe	8		
39 dozer	10		

LABOR

NAME	OCCUPATION	START TIME:	STOP TIME:	HOURS
Randy	Foreman 4 guys	6:30	4:30	40
Kevin	Laborer	8:30	4:30	8
Jason	Safety	6:30	4:00	10
Chippers	2 guys	6:30	4:30	20
Bud	Operator	6:30	2:30	8
Matt	Foreman	6:30	4:30	10
			Total Crew Hours for Today:	97
			Total Crew Hours Cumulative:	4,238.50

Details of Hauling/ Weight ticket # and tons

TRUCK	WEIGHT TICKET # / TONS	LOAD COUNT	ORIGIN	DESTINATION

Weather Report

Partly cloudy High 81 Low 66

Randy Hoskins

Solutia OU-3 Remediation Action

Construction Daily Work Report

Day # 66

Project Number/Name:	OU-3
Safety Meeting Topic:	Weather,utilities
Date:	9-23-15. Wednesday

Activities/ Deliveries

Specific task working and or accomplished today:

AREA A: dug out and graded 78' long 15'6" wide on south side headed north for 6" of concrete cover and loaded into roll off can. AREA E: Acker electric lowered cable line on west side of area e,we then dug out and graded 58' long 2' wide 12" deep and got graded with base and tamped in.Put up 58' of silt fence in ditch line on the west side of area e.Deconed 250 loader to put the base in with.

EQUIPMENT	HOURS	EQUIPMENT	HOURS
78 mini hoe	10		
250 loader	10		
Plate tamp	2		

LABOR

NAME	OCCUPATION	START TIME:	STOP TIME:	HOURS
Randy crew	Foreman 5 guys	6:30	4:30	50
Jason	Safety	6:30	4:30	10
Acker electric	2 guys	8:30a.m	10:30a.m	4
Brown's concrete	6 guys	7:30	4:30	54
			Total Crew Hours for Today:	118
			Total Crew Hours Cumulative:	5,692

Details of Hauling/ Weight ticket # and tons

TRUCK	WEIGHT TICKET # / TONS	LOAD COUNT	ORIGIN	DESTINATION

Weather Report

Partly cloudy. High 86. Low 63

Randy Goodwin

Solutia OU-3 Remediation Action

Construction Daily Work Report

Day # 51

Project Number/Name:	Ou-3
Safety Meeting Topic:	Fire safety
Date:	9-1-15 Tuesday

Activities/ Deliveries

Specific task working and or accomplished today:
AUTOCLAVE:Quility gutter installed gutter and down spouts on the wall at autoclave.Finished up with the sikaflex on expansions joints and saw joints on the new concrete at autoclave.PCB CELL:Deconed the Sakai roller to take to the borrow area. BORROW AREA: Chippers continued grinding up brush.Taylor worked on fixing sediment pond to grade.

EQUIPMENT	HOURS	EQUIPMENT	HOURS
270 track hoe	10		
39 dozer	8		
Sakai roller	4		

LABOR

NAME	OCCUPATION	START TIME:	STOP TIME:	HOURS
Randy	Foreman 5 guys	6:30	4:30	50
Jason	Safety	6:30	4:30	10
Bud	Operator	6:30	2:30	8
Matt	Foreman	6:30	4:30	10
Chippers	2 guys	6:30	4:30	20
Quility gutter	4 guys	8:30	11:30	12
			Total Crew Hours for Today:	110
			Total Crew Hours Cumulative:	4,348.50

Details of Hauling/ Weight ticket # and tons

TRUCK	WEIGHT TICKET # / TONS	LOAD COUNT	ORIGIN	DESTINATION

Weather Report

Sunny High 88 Low 69

Randy Goodwin

Solutia OU-3 Remediation Action

Construction Daily Work Report

Day # 52

Project Number/Name:	OU-3
Safety Meeting Topic:	Public safety
Date:	9-2-15 Wednesday

Activities/ Deliveries 60' of cmp pipe,concrete

Specific task working and or accomplished today:

BORROW AREA:Put 36" riser pipe in sediment pond in a 7'x6' box and poured concrete 22"deep around pipe and inside pipe top of riser set to 877 elev.saw cut 20"x20" hole on the side of riser pipe and ran 40' of 18" cmp pipe out of riser pipe.Stripped topsoil,and Chippers continued chipping

EQUIPMENT	HOURS	EQUIPMENT	HOURS
270 track hoe	10		
39 dozer	10		

LABOR

NAME	OCCUPATION	START TIME:	STOP TIME:	HOURS
Randy crew	Foreman 5 guys	6:30	4:30	50
Jason	Safety	6:30	4:30	10
Bud	Operator	6:30	2:30	8
Matt	Foreman	6:30	4:30	10
Chippers	2 guys	6:30	4:30	20
Lance & ellis		10:30	2:30	8
			Total Crew Hours for Today:	106
			Total Crew Hours Cumulative:	4,454.50

Details of Hauling/ Weight ticket # and tons

TRUCK	WEIGHT TICKET # / TONS	LOAD COUNT	ORIGIN	DESTINATION

Weather Report

Partly cloudy High 90 Low 70

Randy Goodwin

Solutia OU-3 Remediation Action

Construction Daily Work Report

Day # 53

Project Number/Name:	OU-3
Safety Meeting Topic:	Slips and falls
Date:	9-3-15 Thursday

Activities/ Deliveries

Specific task working and or accomplished today:

BORROW AREA: finished laying 18" cmp add a 17' piece to get out side the berm.Got the berm on the sediment pond backfilled and rolled in where we layed the 18"pipe through it.Qored 7 holes in riser pipe.Got diversion berm put in and stripped topsoil.Chippers continued chipping.

EQUIPMENT	HOURS	EQUIPMENT	HOURS
270 track hoe	10		
39 dozer	10		
Sakai roller	3		

LABOR

NAME	OCCUPATION	START TIME:	STOP TIME:	HOURS
Randy crew	Foreman 4 guys	6:30	4:30	40
Deon	Labor	6:30	2:00	7.5
Bud	Operator	6:30	2:30	8
Matt	Foreman	6:30	4:00	9.5
Chippers	2 guys	6:30	4:30	20
Jason	Safety	6:30	4:00	9.5
			Total Crew Hours for Today:	94.5
			Total Crew Hours Cumulative:	4,549

Details of Hauling/ Weight ticket # and tons

TRUCK	WEIGHT TICKET # / TONS	LOAD COUNT	ORIGIN	DESTINATION

Weather Report

Partly cloudy High 90 Low 72

Randy Goodwin

Solutia OU-3 Remediation Action

Construction Daily Work Report

Day # 54

Project Number/Name:	OU-3
Safety Meeting Topic:	Safe holiday weekend
Date:	9-4-15 Friday

Activities/ Deliveries

Screen

Specific task working and or accomplished today:

MOBILIZATION: Brought in the screen. PCB CELLS:Used the 270 track hoe and raked up brush east side of PCB cell and started loading into roll off can,then deconed the 270 and John deer skid steer BORROW AREA: drilled 3 more holes in the riser pipe in the sediment pond got holes finished wrapped fabric around the lower holes and backfilled with 57 stone halfway up to the top holes. Chippers finished chipping th brush. SILT FENCE: installed 169' of northwest corner of borrow area

EQUIPMENT	HOURS	EQUIPMENT	HOURS
270 teach hoe	9		
John deer skid steer	9		

LABOR

NAME	OCCUPATION	START TIME:	STOP TIME:	HOURS
Randy	Foreman 5 guys	6:30	4:00	47.5
Jason	Safety	6:30	4:00	9.5
Bud	Operator	12:30	2:30	2
Matt	Foreman	0:00		
Chippers	2 guys	6:30	4:00	19
			Total Crew Hours for Today:	78
			Total Crew Hours Cumulative:	4,627

Details of Hauling/ Weight ticket # and tons

TRUCK	WEIGHT TICKET # / TONS	LOAD COUNT	ORIGIN	DESTINATION

Weather Report

Sunny High 94 Low 69

Randy Goodwin

Solutia OU-3 Remediation Action

Construction Daily Work Report

Day # 55

Project Number/Name:	OU-3
Safety Meeting Topic:	Starting back after long weekend
Date:	9-8-15 Tuesday

Activities/ Deliveries

Loads of 24 stone

Specific task working and or accomplished today:

MOBILIZATION:Volvo off road dump truck. AREA E:dug out for the footer along sidewalk on south side heading towards east side and loaded in to roll off.Deconed 250 loader to get base to grade out for the footer. Dugout and graded 50' 2'wide and put up 50' of silt fence with the wooden stakes. BORROW AREA:unfolded the screen got it ready,put down 24 stone on haul road out of borrow area towards new haul road,cut down and worked on ditch beside diversion berm.

EQUIPMENT	HOURS	EQUIPMENT	HOURS
78 mini hoe	7		
250 loader	7		
270 track hoe	6		
39 dozer	10		

LABOR

NAME	OCCUPATION	START TIME:	STOP TIME:	HOURS
Randy crew	Foreman 5 guys	6:30	4:30	50
Tyler crew	Foreman 3 guys	6:30	4:30	30
Bud	Operator	6:30	2:30	8
Matt	Foreman fire watch at night	5:00:00p	6:00a	13
Jason	Safety	6:30	4:00	9.5
			Total Crew Hours for Today:	110.5
			Total Crew Hours Cumulative:	4,737.50

Details of Hauling/ Weight ticket # and tons

TRUCK	WEIGHT TICKET # / TONS	LOAD COUNT	ORIGIN	DESTINATION
Taylor dump truck	000613646/22.31 tons	1	McCartney	Haul road
Taylor dump truck	000613677/21.83 tons	2	McCartney	Haul road
Taylor dump truck	000613699/21.27 tons	3	McCartney	Haul road
Taylor dump truck	000613714/21.82 tons	4	McCartney	Haul road
Taylor dump truck	000613734/23.75 tons	5	McCartney	Haul road

Weather Report

Cloudy High 89 Low 69

Randy Goodwin

Solutia OU-3 Remediation Action

Construction Daily Work Report

Day # 56

Project Number/Name:	OU-3
Safety Meeting Topic:	Spotters,watch out people walking around
Date:	9-9-15 Wednesday

Activities/ Deliveries 6 loads of stone

986-[p7o

Specific task working and or accomplished today:

AREA E: Spot dug up several places found 5 pipes and 4 electric lines.Dug 83' of footer 2' wide loaded in a roll off and got graded with base and put up 83' of silt fence and tamped in.Deconed 250 loader to put the base in with. BORROW AREA:Cut down dirt for a pad and got screen set up.Put in rip rap ditch south side of sediment pond (23'wide x 26'long x18" of riprap with 598 sq feet 10oz fabric) put emergency spillway in from bottom inside pond to down slope out pond(10'wide x40'long x 18" of riprap

EQUIPMENT	HOURS	EQUIPMENT	HOURS
61 dozer	7	250 loader	10
39 dozer	10	Plate tamp	3
270 track hoe	5		
78 mini hoe	10		

LABOR

NAME	OCCUPATION	START TIME:	STOP TIME:	HOURS
Randy crew	Foreman 5 guys	6:30	4:30	50
Tyler crew	Foreman 3 guys	6:30	4:30	30
Bud	Operator	6:30	2:30	8
Matt	Foreman	5:00p	6:00a	13
Jason	Safety	6:30	4:30	10
Turner survey	3 guys	9:00	4:30	22.5
			Total Crew Hours for Today:	133.5
			Total Crew Hours Cumulative:	4,871

Details of Hauling/ Weight ticket # and tons

TRUCK	WEIGHT TICKET # / TONS	LOAD COUNT	ORIGIN	DESTINATION
Taylor dump truck	16731588/24.69 tons	1	Vulcan	Haul road (base)
Taylor dump truck	16731603/24.43 tons	2	Vulcan	Haul road (base)
Taylor dump truck	16731636/24.68 tons	3	Vulcan	Haul road (base)
Taylor dump truck	16731652/23.15 tons	4	Vulcan	Haul road (base)
Taylor dump truck	000613805/21.94 tons	5	McCartney	Haul road (24 stone)
Taylor dump truck	000613818/21.87 tons	6	McCartney	Haul road (24 stone)

Weather Report

Cloudy High 88 Low 69

Randy Godwin

Solutia OU-3 Remediation Action

Construction Daily Work Report

Day # 57

Project Number/Name:	OU-3
Safety Meeting Topic:	Slips and falls
Date:	9-10-15 Thursday

Activities/ Deliveries

Load of base

Specific task working and or accomplished today:

AREA E: spot dug up few places looking of utilities,dug out 113' 2' wide for footer graded 96' of that and tamped in,and put up 100' of silt fence.Found 6 electric lines and 2 old clay lines.Deconed 250 to bring in base with. PCB CELLS: loaded in to roll off brush on east side of PCB cell,raked up west side brush into a pile,put in rip rap check dam in ditch on the east side also. BORROW AREA:dug out drain pipe out of sediment pond and installed head wall got it sealed off,put riprap check dam in front of head

X 18" tall 110 sq feet of 10 oz fabric

EQUIPMENT	HOURS	EQUIPMENT	HOURS
78 mini hoe	10	270 track hoe	8
250 loader	10	39 dozer	5
Plate tamp	2	61 dozer	2
228 track hoe	8		

LABOR

NAME	OCCUPATION	START TIME:	STOP TIME:	HOURS
Randy crew	Foreman 5 guys	6:30	4:30	50
Tyler crew	Foreman 3 guys	6:30	4:30	30
Bud	Operator	6:30	1:30	7
Matt	Foreman	0:00		
Jason	Safety	6:30	4:30	10
			Total Crew Hours for Today:	97
			Total Crew Hours Cumulative:	4,968

Details of Hauling/ Weight ticket # and tons

TRUCK	WEIGHT TICKET # / TONS	LOAD COUNT	ORIGIN	DESTINATION
Taylor dump truck	16731664/26.72 tons	1	Vulcan	Haul road (base)

Weather Report

Scattered showers High 82 Low 67

Randy Goodwin

Solutia OU-3 Remediation Action

Construction Daily Work Report

Day # 58

Project Number/Name:	OU-3
Safety Meeting Topic:	Visibility
Date:	9-11-15 Friday

Activities/ Deliveries

Specific task working and or accomplished today:

AREA E: spot dug up few places looking for utilities then dug out and graded for footer 84' 2' wide down east side through north east corner started up north side. PCB CELL:disced up west side of PCB cell, started screening dirt hauled 11 Taylor dump truck loads,5 rock truck loads to the west of PCB cell.Grassed slops from spill way to where it plays out on sediment pond used 1 bag of grass seed and 2 bags of fertilizer and put 2 and half roll of erosion fabric on the slopes

EQUIPMENT	HOURS	EQUIPMENT	HOURS
Valvo rock truck	6	Farm tractor with disc	2
270 track hoe	8	39 dozer	6
228 track hoe	10	78 mini hoe	10
61 dozer	10	250 loader	10

LABOR

NAME	OCCUPATION	START TIME:	STOP TIME:	HOURS
Randy crew	Foreman 4 guys	6:30	4:30	40
Tyler crew	Foreman 2 guys	6:30	4:30	20
Deon	Laborer	6:30	4:00	9.5
Matt	Foreman	6:30	4:00	9.5
Jason	Safety	6:30	4:30	10
Bud	Operator	6:30	2:30	8
			Total Crew Hours for Today:	97
			Total Crew Hours Cumulative:	5,065

Details of Hauling/ Weight ticket # and tons

TRUCK	WEIGHT TICKET # / TONS	LOAD COUNT	ORIGIN	DESTINATION
Taylor dump truck		11	Borrow area	PCB cell
Off road truck		5	Borrow area	PCB cell

Weather Report

Partly cloudy High 87 Low 65

Randy Goodwin

Solutia OU-3 Remediation Action

Construction Daily Work Report

Day # 59

Project Number/Name:	OU-3
Safety Meeting Topic:	Weather,erosion control
Date:	9-14-15 Monday

Activities/ Deliveries Rebar

Specific task working and or accomplished today:

AREA E: spot dug up power lines nothwest corner coming off telephone pole,spot dug up looking for phone lines on the south side,took down white fence around pump station,dug out 109' 2' wide down south side heading west around the pump station graded 100' and put up 100' of silt fence.Unloaded load of rebar for the walls and footer.

EQUIPMENT	HOURS	EQUIPMENT	HOURS
78 mini hoe	10		10
250 loader	10		6
Plate tamp	3		10
			10

LABOR

NAME	OCCUPATION	START TIME:	STOP TIME:	HOURS
Randy crew	Foreman 5 guys	6:30	4:30	50
Jason	Safety	6:30	4:30	10
			Total Crew Hours for Today:	60
			Total Crew Hours Cumulative:	5,125

Details of Hauling/ Weight ticket # and tons

TRUCK	WEIGHT TICKET # / TONS	LOAD COUNT	ORIGIN	DESTINATION

Weather Report

Sunny High 82 Low 50

Solutia OU-3 Remediation Action

Construction Daily Work Report

Day # 1

Project Number/Name:	OU-3
Safety Meeting Topic:	Drinking plenty of water
Date:	9/14/15 Monday

Activities/ Deliveries

Specific task working and or accomplished today:

Load count 50. PCB CELL: Got the rest of the brush up from the west side of the cell and put in a new container.Hauled screened dirt to the cell from borrow pit.Continued spreading fill dirt around the west corner of the cell almost down to the exit road.

EQUIPMENT	HOURS	EQUIPMENT	HOURS
39 dozer	10	Screen	10
270 track hoe	10	Rock truck	10
228 track hoe	8		
Pad foot roller	6		

LABOR

NAME	OCCUPATION	START TIME:	STOP TIME:	HOURS
Tyler crew	Foreman 3 guys	6:30	4:30	30
Bud	Operator	6:30	2:30	8
Matt	Foreman	6:30	4:30	10
			Total Crew Hours for Today:	48
			Total Crew Hours Cumulative:	48

Details of Hauling/ Weight ticket # and tons

TRUCK	WEIGHT TICKET # / TONS	LOAD COUNT	ORIGIN	DESTINATION
Off road truck		20	Borrow pit	PCB cell
TC truck		9	Borrow pit	PCB cell
TC truck		21	Borrow pit	PCB cell

Weather Report

Sunny High 82 / Low 50

Solutia OU-3 Remediation Action

Construction Daily Work Report

Day # 60

Project Number/Name:	OU-3
Safety Meeting Topic:	Power lines,dust control
Date:	9-15-15 Tuesday

Activities/ Deliveries

Specific task working and or accomplished today:

AREA E: hand dug out 5' on west side from power pole to curb because of electric lines.Dud out 57'on top of electric line on west side heading south till the end of the asphalt where the line turned headed towards the scales, then dug out 20' past asphalt on the west side going south and got graded with base.Graded from corner of pump station headed west past telephone pole to curb 15' with base.Deconed 250 loader to haul base. HAUL ROAD: Layed 24' of 24" rcp pipe to replace the cmp pipe on haul

Put up 70' of silt fence around AREA E.

EQUIPMENT	HOURS	EQUIPMENT	HOURS
78 mini hoe	10	228 track hoe	3
250 loader	10		
Plate tamp	2		
Sakai roller	2		

LABOR

NAME	OCCUPATION	START TIME:	STOP TIME:	HOURS
Randy crew	Foreman 5 guys	6:30	4:30	50
Jason	Safety	6:30	4:30	10
			Total Crew Hours for Today:	60
			Total Crew Hours Cumulative:	5,185

Details of Hauling/ Weight ticket # and tons

TRUCK	WEIGHT TICKET # / TONS	LOAD COUNT	ORIGIN	DESTINATION

Weather Report

Sunny High 84 Low 55

Randy Goodwin

Solutia OU-3 Remediation Action

Construction Daily Work Report

Day # 2

Project Number/Name:	OU-3
Safety Meeting Topic:	Dust control
Date:	9/15/15 Tuesday

Activities/ Deliveries

Specific task working and or accomplished today:

Load count 32. PCB CELL:.Hauled screened dirt to the cell from borrow pit.Continued spreading fill dirt around the west corner of the cell down to the exit road.The trucks started using exit road. BORROW PIT: Started putting the rock from the screen behind the diversion berm.

EQUIPMENT	HOURS	EQUIPMENT	HOURS
39 dozer	10	Screen	10
270 track hoe	10	Rock truck	10
228 track hoe	5	Loader	3
Pad foot roller	6		

LABOR

NAME	OCCUPATION	START TIME:	STOP TIME:	HOURS
Tyler crew	Foreman 4 guys	6:30	4:30	40
Bud	Operator	6:30	2:30	8
Matt	Foreman	6:30	4:30	10
			Total Crew Hours for Today:	58
			Total Crew Hours Cumulative:	106

Details of Hauling/ Weight ticket # and tons

TRUCK	WEIGHT TICKET # / TONS	LOAD COUNT	ORIGIN	DESTINATION
Off road truck		15	Borrow pit	PCB cell
TC truck		17	Borrow pit	PCB cell

Weather Report

Sunny and 83 degrees

Solutia OU-3 Remediation Action

Construction Daily Work Report

Day # 61

Project Number/Name:	OU-3
Safety Meeting Topic:	Beware of your surroundings
Date:	9-16-15 Wednesday

Activities/ Deliveries

Liner

Specific task working and or accomplished today:

AREA E: dug out and graded 83' of footer 2' wide on west side then turned headed back east,saw cut old sidewalk out and removed 2'wide x4' long,saw cut asphalt 56' long on west side of area e.Sleeved 3 pipes sleeved 1 with sch 80 4",sleeved other 2 with sdr 11 hdpe pipe 6" filled all 3 with foam.Unloaded 11 rolls of liner on area e.Put up 83' of silt fence.Deconed 250 loader to put in base with.

EQUIPMENT	HOURS	EQUIPMENT	HOURS
78 mini hoe	10		
250 loader	10		
Plate tamp	2		

LABOR

NAME	OCCUPATION	START TIME:	STOP TIME:	HOURS
Randy crew	Foreman 5 guys	6:30	4:30	50
Jason	Safety	6:30	12:30	6
			Total Crew Hours for Today:	56
			Total Crew Hours Cumulative:	5,241

Details of Hauling/ Weight ticket # and tons

TRUCK	WEIGHT TICKET # / TONS	LOAD COUNT	ORIGIN	DESTINATION

Weather Report

Partly cloudy High 84 Low 60

Randy Goodwin

Solutia OU-3 Remediation Action

Construction Daily Work Report

Day # 3

Project Number/Name:	OU-3
Safety Meeting Topic:	Be aware of your surroundings.
Date:	9/16/15 Wednesday

Activities/ Deliveries

Specific task working and or accomplished today:

Load count 9. PCB CELL: Continued spreading fill dirt from the borrow pit.Unloaded 2 trucks of poly liner (17 rolls) BORROW PIT: Broke one of the belts on the screen.They will be there to fix it in the morning.Continued putting the rock from the screen behind the diversion. Brought the lower cut further to the north to the sediment pond and staked the dirt on the upper shelf so the screen can continue to move north with the upper cut.

EQUIPMENT	HOURS	EQUIPMENT	HOURS
39 dozer	8	Screen	2
270 track hoe		Rock truck	2
228 track hoe	10	Loader	8
Pad foot roller	2		

LABOR

NAME	OCCUPATION	START TIME:	STOP TIME:	HOURS
Tyler crew	Foreman 4 guys	6:30	5:00	42
Bud	Operator	6:30	2:30	8
Matt	Foreman	6:30	2:30	8
			Total Crew Hours for Today:	58
			Total Crew Hours Cumulative:	164

Details of Hauling/ Weight ticket # and tons

TRUCK	WEIGHT TICKET # / TONS	LOAD COUNT	ORIGIN	DESTINATION
Off road truck		3	Borrow pit	PCB cell
TC truck		3	Borrow pit	PCB cell
TC truck		3	Borrow pit	PCB cell
Red Wood	21.11	11 Rolls	Houston TX	Solutia
Red Wood	11.58	6 Rolls	Houston TX	Solutia

Weather Report

Sunny high 82 low 67

Solutia OU-3 Remediation Action

Construction Daily Work Report

Day # 62

Project Number/Name:	OU-3
Safety Meeting Topic:	Ppe
Date:	9-17-15. Thursday

Activities/ Deliveries

Liner

Specific task working and or accomplished today:

AREA E: unloaded 4 rolls of liner at area e,sleeved another steel pipe with 4"sch 80 pipe.Dug up and graded 79' of footer last run west corner heading up to south side walk and put up 79' of silt fence.Deconed 250 loader to put in base.Started spot digging up utilities around pump station to dig out the 6" for concrete.Brown's concrete continued forming for the footer

EQUIPMENT	HOURS	EQUIPMENT	HOURS
78 mini hoe	10		
250 loader	10		
Plate tamp	1.5		

LABOR

NAME	OCCUPATION	START TIME:	STOP TIME:	HOURS
Randy crew	Foreman/safety 4 guys	6:30	4:30	40
Kevin	Laborer	6:30	1:30	7
Jason	Safety	0:00		
Brown's concrete	5 guys	7:30	4:00	42.5
			Total Crew Hours for Today:	47
			Total Crew Hours Cumulative:	5,328

Details of Hauling/ Weight ticket # and tons

TRUCK	WEIGHT TICKET # / TONS	LOAD COUNT	ORIGIN	DESTINATION

Weather Report

Sunny. High 86. Low 60

Randy Goodwin

Solutia OU-3 Remediation Action

Construction Daily Work Report

Day # 4

Project Number/Name:	OU-3
Safety Meeting Topic:	PPE
Date:	9/17/15 Thursday

Activities/ Deliveries

Specific task working and or accomplished today:

Load count 2. BORROW PIT: Screen belt broke after repair. Had a new belt installed. Worked on the rip rap flume around the borrow pit. We got 217' of the flume

EQUIPMENT	HOURS	EQUIPMENT	HOURS
39 dozer	8	Screen	1
270 track hoe		Rock truck	6
228 track hoe	10	Loader	8
Pad foot roller			

LABOR

NAME	OCCUPATION	START TIME:	STOP TIME:	HOURS
Tyler crew	Foreman 3 guys	6:30	5:00	31.5
Bud	Operator	6:30	2:30	8
Matt	Foreman	6:30	5:00	10.5
Jessie Payne	Labor	0:00	0:00	0
			Total Crew Hours for Today:	50
			Total Crew Hours Cumulative:	214

Details of Hauling/ Weight ticket # and tons

TRUCK	WEIGHT TICKET # / TONS	LOAD COUNT	ORIGIN	DESTINATION
Off road truck		1	Borrow pit	PCB cell
TC truck		1	Borrow pit	PCB cell
TC truck	000615410/22.55	1	McCarteny	Borrow Pit
TC Truck	000615430/23.10	2	McCarteny	Borrow Pit
TC truck	000615453/22.42	3	McCarteny	Borrow Pit
TC truck	000615481/20.81	4	McCarteny	Borrow Pit
TC truck	000615499/18.47	5	McCarteny	Borrow Pit

Weather Report

Sunny high 85 low 60

Solutia OU-3 Remediation Action

Construction Daily Work Report

Day # 63

Project Number/Name:	OU-3
Safety Meeting Topic:	Poor housekeeping
Date:	9-19-15. Friday

Activities/ Deliveries

Specific task working and or accomplished today:

BORROW AREA:Grassed and hayed inside half inside sediment pond and top of pond. AREA E:put rebar cage around pipes that we put sleeves on,hand shoveled out and around pump station and utilities and loaded out into roll off

EQUIPMENT	HOURS	EQUIPMENT	HOURS
250 loader	4		

LABOR

NAME	OCCUPATION	START TIME:	STOP TIME:	HOURS
Randy crew	Foreman/safety 5 guys	6:30	4:00	47.5
Jason	Safety	0:00		
Brown's concrete	5 guys	7:00	12:00	25
Lance surveyors	2 guys	8:00	1:30	11
			Total Crew Hours for Today:	83.5
			Total Crew Hours Cumulative:	5,411.50

Details of Hauling/ Weight ticket # and tons

TRUCK	WEIGHT TICKET # / TONS	LOAD COUNT	ORIGIN	DESTINATION

Weather Report

Sunny. High 88. Low 60

Solutia OU-3 Remediation Action

Construction Daily Work Report

Day # 5

Project Number/Name:	OU-3
Safety Meeting Topic:	Poor house keeping
Date:	9/18/15 Friday

Activities/ Deliveries

Specific task working and or accomplished today:
Load count 51 BORROW PIT: Hauled screened dirt to PCB cell from borrow pit.

EQUIPMENT	HOURS	EQUIPMENT	HOURS
Rock Truck	10	Screen	10
270 track hoe	10	Rock truck	10
228 track hoe		Loader	10
Pad foot roller	5	D61 dozer	10

LABOR

NAME	OCCUPATION	START TIME:	STOP TIME:	HOURS
Tyler crew	Foreman 4 guys	6:30	4:30	40
Bud	Operator	6:30	2:30	8
Matt	Foreman	6:30	4:30	10
			Total Crew Hours for Today:	58
			Total Crew Hours Cumulative:	272

Details of Hauling/ Weight ticket # and tons

TRUCK	WEIGHT TICKET # / TONS	LOAD COUNT	ORIGIN	DESTINATION
Off road truck		25	Borrow pit	PCB cell
Off road truck		26	Borrow pit	PCB cell

Weather Report

Sunny high 88 low 60

Solutia OU-3 Remediation Action

Construction Daily Work Report

Day # 64

Project Number/Name:	OU-3
Safety Meeting Topic:	Rain slick spots,ppe
Date:	9-21-15. Monday

Activities/ Deliveries

Specific task working and or accomplished today:

AREA E:finish digging out around pump station north west corner of area e and loaded out into roll off. AREA A: took down and hauled off weather tower and flushed cut off all pipes to the ground.

EQUIPMENT	HOURS	EQUIPMENT	HOURS
78 mini hoe	6		
250 loader	6		

LABOR

NAME	OCCUPATION	START TIME:	STOP TIME:	HOURS
Randy crew	Foreman 4 guys	6:30	4:30	40
Kevin	Laborer	0:00		
Jason	Safety	6:30	4:30	10
Brown's concrete	6 guys	7:00 a.m	9:30:00 A.m	15
			Total Crew Hours for Today:	65
			Total Crew Hours Cumulative:	5,476.50

Details of Hauling/ Weight ticket # and tons

TRUCK	WEIGHT TICKET # / TONS	LOAD COUNT	ORIGIN	DESTINATION

Weather Report

Cloudy. High 81. Low 60

Randy Goodwin

Solutia OU-3 Remediation Action

Construction Daily Work Report

Day # 5

Project Number/Name:	OU-3
Safety Meeting Topic:	PPE
Date:	9/21/15 Monday

Activities/ Deliveries

Specific task working and or accomplished today:
Load count 25. BORROW PIT: Hauled screened dirt to PCB cell from borrow pit.

EQUIPMENT	HOURS	EQUIPMENT	HOURS
Rock Truck	6	Screen	6
270 track hoe	6	Rock truck	
228 track hoe		Loader	
Pad foot roller	6	D61 dozer	6

LABOR

NAME	OCCUPATION	START TIME:	STOP TIME:	HOURS
Tyler crew	Foreman 3 guys	6:30	5:00	31.5
Bud	Operator	6:30	2:30	8
Matt	Foreman	6:30	5:00	10.5
Jonathan Tenney	Labor	0:00	0:00	0
			Total Crew Hours for Today:	50
			Total Crew Hours Cumulative:	264

Details of Hauling/ Weight ticket # and tons

TRUCK	WEIGHT TICKET # / TONS	LOAD COUNT	ORIGIN	DESTINATION
Off road truck		16	Borrow pit	PCB cell
TC truck		9	Borrow pit	PCB cell

Weather Report

Rained all morning 60%

Solutia OU-3 Remediation Action

Construction Daily Work Report

Day # 65

Project Number/Name:	OU-3
Safety Meeting Topic:	Weather
Date:	9-22-15. Tuesday

Activities/ Deliveries

Specific task working and or accomplished today:

AREA A: it out 146' of waddles between fence and curb.Graded down gravel top of curb to top of curb by parking started at main entrance gate working north 68' long 15'6" wide for 6" concrete cover.Loaded up 3 trench box's and spreader bars to take back for Tyler.

EQUIPMENT	HOURS	EQUIPMENT	HOURS
78 mini hoe	7		
250 loader	2		

LABOR

NAME	OCCUPATION	START TIME:	STOP TIME:	HOURS
Randy crew	Foreman 4 guys	6:30	4:30	40
Kevin	Laborer	0:00		
Jason	Safety	6:30	4:30	10
Brown's concrete	5 guys	7:00	4:30	47.5
			Total Crew Hours for Today:	97.5
			Total Crew Hours Cumulative:	5,574

Details of Hauling/ Weight ticket # and tons

TRUCK	WEIGHT TICKET # / TONS	LOAD COUNT	ORIGIN	DESTINATION

Weather Report

Cloudy. High 80. Low 63

Randy Goodwin

Solutia OU-3 Remediation Action

Construction Daily Work Report

Day # 5

Project Number/Name:	OU-3
Safety Meeting Topic:	PPE
Date:	9/22/15 Tuesday

Activities/ Deliveries

Specific task working and or accomplished today:
Load count 38 BORROW PIT: Hauled screened dirt to PCB cell from borrow pit.

EQUIPMENT	HOURS	EQUIPMENT	HOURS
Rock Truck	8	Screen	8
270 track hoe		Rock truck	6
228 track hoe	6	Loader	8
Pad foot roller	6	39 dozer	6

LABOR

NAME	OCCUPATION	START TIME:	STOP TIME:	HOURS
Tyler crew	Foreman 4 guys	6:30	5:00	42
Bud	Operator	6:30	2:30	8
Matt	Foreman	6:30	5:00	10.5
Winston Nemire	Temp Labor	6:30	5:00	10.5
			Total Crew Hours for Today:	71
			Total Crew Hours Cumulative:	335

Details of Hauling/ Weight ticket # and tons

TRUCK	WEIGHT TICKET # / TONS	LOAD COUNT	ORIGIN	DESTINATION
Off road truck		25	Borrow pit	PCB cell
TC truck		6	Borrow pit	PCB cell
Off road truck		7	Borrow pit	PCB cell

Weather Report

Solutia OU-3 Remediation Action

Construction Daily Work Report

Day # 5

Project Number/Name:	OU-3
Safety Meeting Topic:	Weather/house keeping
Date:	9/24/15 Thursday

Activities/ Deliveries

Specific task working and or accomplished today:
Load count 43 BORROW PIT: Hauled screened dirt to PCB cell from borrow pit.

EQUIPMENT	HOURS	EQUIPMENT	HOURS
Rock Truck	10	Screen	10
228 track hoe	10	Rock truck	10
Water truck	8	Loader	10
Pad foot roller	10	39 dozer	10

LABOR

NAME	OCCUPATION	START TIME:	STOP TIME:	HOURS
Tyler crew	Foreman 5 guys	6:30	5:00	52.5
Matt	Foreman	6:30	5:00	10.5
Winston Nemire	Temp Labor	6:30	5:00	10.5
			Total Crew Hours for Today:	73.5
			Total Crew Hours Cumulative:	490

Details of Hauling/ Weight ticket # and tons

TRUCK	WEIGHT TICKET # / TONS	LOAD COUNT	ORIGIN	DESTINATION
Off road truck		23	Borrow pit	PCB cell
Off road truck		20	Borrow pit	PCB cell

Weather Report

Solutia OU-3 Remediation Action

Construction Daily Work Report

Day # 67

Project Number/Name:	OU-3
Safety Meeting Topic:	Housekeeping,ppe
Date:	9-24-15. Thursday

Activities/ Deliveries

Specific task working and or accomplished today:

AREA E: Browns concrete continued forming for footer and wall. AREA A:Graded out 55' 15'6" wide for 6" of concrete cover south side of area a to north corner then it turns east beside fence graded where the fence was after we removed it. EXISTING FENCE REMOVAL: removed 164' of fence from where the solutia gate fully open to north corner. TEMPORARY FACILITIES: put up 174' of temporary fence at area a. Put waddles back in place.

EQUIPMENT	HOURS	EQUIPMENT	HOURS
78 mini hoe	7		
250 loader	7		

LABOR

NAME	OCCUPATION	START TIME:	STOP TIME:	HOURS
Randy crew	Foreman 5 guys	6:30	4:30	50
Jason	Safety	6:30	4:30	10
Brown's concrete	6 guys	7:00	4:30	57
			Total Crew Hours for Today:	117
			Total Crew Hours Cumulative:	5,809

Details of Hauling/ Weight ticket # and tons

TRUCK	WEIGHT TICKET # / TONS	LOAD COUNT	ORIGIN	DESTINATION

Weather Report

Partly cloudy. High 81. Low 62

Randy Goodwin

Solutia OU-3 Remediation Action

Construction Daily Work Report

Day # 68

Project Number/Name:	OU -3
Safety Meeting Topic:	Wet roadways
Date:	9-25-15. Friday

Activities/ Deliveries

Specific task working and or accomplished today:
Got rained out,took safety class

EQUIPMENT	HOURS	EQUIPMENT	HOURS

LABOR

NAME	OCCUPATION	START TIME:	STOP TIME:	HOURS
Randy crew	Foreman 5 guys	6:30	1:00	32.5
Jason	Safety	6:30	2:30	8
Brown's concrete		0:00		
			Total Crew Hours for Today:	40.5
			Total Crew Hours Cumulative:	5,849.50

Details of Hauling/ Weight ticket # and tons

TRUCK	WEIGHT TICKET # / TONS	LOAD COUNT	ORIGIN	DESTINATION

Weather Report

Rain showers High 72. Low 60

Randy Goodwin

Solutia OU-3 Remediation Action

Construction Daily Work Report

Day # 10

Project Number/Name:	OU-3
Safety Meeting Topic:	Weather/house keeping
Date:	9/25/15 Friday

Activities/ Deliveries

Specific task working and or accomplished today:

BORROW PIT: Rained most of the day. Greesed equipment and fixed a few things on the screen. Had 6 loads of class 1 rip rap. Put in 40' (440 sq ft) of the drainage ditch around the pit.

EQUIPMENT	HOURS	EQUIPMENT	HOURS
Rock Truck		Screen	
228 track hoe	2	Rock truck	
Water truck		Loader	2
Pad foot roller		39 dozer	

LABOR

NAME	OCCUPATION	START TIME:	STOP TIME:	HOURS
Tyler crew	Foreman 5 guys	6:30	2:30	40
Matt	Foreman	6:30	2:30	8
Winston Nemire	Temp Labor	6:30	10:30	4
			Total Crew Hours for Today:	52
			Total Crew Hours Cumulative:	542

Details of Hauling/ Weight ticket # and tons

TRUCK	WEIGHT TICKET # / TONS	LOAD COUNT	ORIGIN	DESTINATION
Jerrys trucking	Class 1	1	McCartney	Borrow pit
Jerrys trucking	Class 1	2	McCartney	Borrow pit
Jerrys trucking	Class 1	3	McCartney	Borrow pit
Jerrys trucking	Class 1	4	McCartney	Borrow pit
Jerrys trucking	Class 1	5	McCartney	Borrow pit
Jerrys trucking	Class 1	6	McCartney	Borrow pit

Weather Report

60% chance of rain

Solutia OU-3 Remediation Action

Construction Daily Work Report

Day # 69

Project Number/Name:	OU-3
Safety Meeting Topic:	
Date:	9-26-15. Saturday

Activities/ Deliveries

Specific task working and or accomplished today:
Worked with Tyler

EQUIPMENT	HOURS	EQUIPMENT	HOURS

LABOR

NAME	OCCUPATION	START TIME:	STOP TIME:	HOURS
Randy crew	Foreman 5 guys			
Jason	Safety	6:30	3:30	9
			Total Crew Hours for Today:	9
			Total Crew Hours Cumulative:	5,858.50

Details of Hauling/ Weight ticket # and tons

TRUCK	WEIGHT TICKET # / TONS	LOAD COUNT	ORIGIN	DESTINATION

Weather Report

Randy Goodwin

Solutia OU-3 Remediation Action

Construction Daily Work Report

Day # 11

Project Number/Name:	OU-3
Safety Meeting Topic:	Be aware of your surroundings
Date:	9/26/15 Saturday

Activities/ Deliveries

Specific task working and or accomplished today:
Load count: 56. BORROW PIT: Hauled screened dirt from borrow pit to the PCB cell.

EQUIPMENT	HOURS	EQUIPMENT	HOURS
Rock Truck	9	Screen	9
228 track hoe	9	Rock truck	9
Water truck		Loader	9
Pad foot roller	9	39 dozer	9

LABOR

NAME	OCCUPATION	START TIME:	STOP TIME:	HOURS
Tyler crew	Foreman 5 guys	6:30	4:00	47.5
Matt	Foreman	6:30	4:00	9.5
Winston Nemire	Temp Labor	6:30	4:00	9.5
			Total Crew Hours for Today:	66.5
			Total Crew Hours Cumulative:	608.5

Details of Hauling/ Weight ticket # and tons

TRUCK	WEIGHT TICKET # / TONS	LOAD COUNT	ORIGIN	DESTINATION
Off road truck		28	Borrow pit	PCB cell
Off road truck		28	Borrow pit	PCB cell

Weather Report

Solutia OU-3 Remediation Action

Construction Daily Work Report

Day # 70

Project Number/Name:	OU-3
Safety Meeting Topic:	
Date:	9-27-15. Sunday

Activities/ Deliveries

Specific task working and or accomplished today:
Worked with Tyler

EQUIPMENT	HOURS	EQUIPMENT	HOURS

LABOR

NAME	OCCUPATION	START TIME:	STOP TIME:	HOURS
Randy crew	Foreman 5 guys			
Jason	Safety	6:30	11:30	5
			Total Crew Hours for Today:	5
			Total Crew Hours Cumulative:	5,863.50

Details of Hauling/ Weight ticket # and tons

TRUCK	WEIGHT TICKET # / TONS	LOAD COUNT	ORIGIN	DESTINATION

Weather Report

Solutia OU-3 Remediation Action

Construction Daily Work Report

Day # 12

Project Number/Name:	OU-3
Safety Meeting Topic:	Be aware of your surroundings
Date:	9/27/15 Sunday

Activities/ Deliveries

Specific task working and or accomplished today:

BORROW PIT: Work on the floor grades of the pit

EQUIPMENT	HOURS	EQUIPMENT	HOURS
Rock Truck		Screen	
228 track hoe	4	Rock truck	
Water truck		Loader	4
Pad foot roller		39 dozer	

LABOR

NAME	OCCUPATION	START TIME:	STOP TIME:	HOURS
Tyler crew	Foreman 5 guys	6:30	11:00	22.5
Matt	Foreman			
Winston Nemire	Temp Labor			
			Total Crew Hours for Today:	22.5
			Total Crew Hours Cumulative:	631

Details of Hauling/ Weight ticket # and tons

TRUCK	WEIGHT TICKET # / TONS	LOAD COUNT	ORIGIN	DESTINATION
Off road truck				
Off road truck				

Weather Report

Solutia OU-3 Remediation Action

Construction Daily Work Report

Day # 71

Project Number/Name:	OU-3
Safety Meeting Topic:	Wet conditions
Date:	9-28-15. Monday

Activities/ Deliveries

Specific task working and or accomplished today:

AREA E: Brown's concrete worked on forming the wall until they got rained out. BORROW AREA: worked on the rip rap ditch south side of borrow area.Dug out and graded 213' of ditch 3' deep 15'wide and put in 18" of rip rap and used 3,195 sq feet of 10 oz fabric.

EQUIPMENT	HOURS	EQUIPMENT	HOURS
228 track hoe	9.5		
John Deere skid steer	9.5		
70 Kcm loader	5		

LABOR

NAME	OCCUPATION	START TIME:	STOP TIME:	HOURS
Randy crew	Foreman 5 guys	6:30	4:30	50
Jason	Safety	6:30	3:00	8.5
Brown's concrete	5 guys	7:30	10:30	15
			Total Crew Hours for Today:	73.5
			Total Crew Hours Cumulative:	5,937

Details of Hauling/ Weight ticket # and tons

TRUCK	WEIGHT TICKET # / TONS	LOAD COUNT	ORIGIN	DESTINATION

Weather Report

Cloudy chance of rain. High 77. Low 69

`

Randy Goodwin

Solutia OU-3 Remediation Action

Construction Daily Work Report

Day # 11

Project Number/Name:	OU-3
Safety Meeting Topic:	Be aware of your surroundings
Date:	9/28/15 Monday

Activities/ Deliveries

Specific task working and or accomplished today:

Load count: 22 BORROW PIT: hauled screened dirt to PCB cell from borrow pit. Rained out at lunch.

EQUIPMENT	HOURS	EQUIPMENT	HOURS
Rock Truck	4	Screen	4
200 Tracy hoe	4	Rock truck	4
Water truck		Loader	4
Pad foot roller	4	39 dozer	4

LABOR

NAME	OCCUPATION	START TIME:	STOP TIME:	HOURS
Tyler crew	Foreman 5 guys	6:30	11:00	22.5
Matt	Foreman	6:30	11:00	4.5
Winston Nemire	Temp Labor	6:30	10:30	4
			Total Crew Hours for Today:	31
			Total Crew Hours Cumulative:	662

Details of Hauling/ Weight ticket # and tons

TRUCK	WEIGHT TICKET # / TONS	LOAD COUNT	ORIGIN	DESTINATION
Off road truck		11	Borrow pit	PCB cell
Off road truck		11	Borrow pit	PCB cell

Weather Report

Rained out at lunch

Solutia OU-3 Remediation Action

Construction Daily Work Report

Day # 72

Project Number/Name:	OU-3
Safety Meeting Topic:	Lighting safety
Date:	9-29-15. Tuesday

Activities/ Deliveries

Specific task working and or accomplished today:

BORROW AREA:worked on the rip rap ditch from south west corner heading west on the south side 170' long x15' wide 18" of rip rap 2,550 sq feet of 10 oz fabric

EQUIPMENT	HOURS	EQUIPMENT	HOURS
228 track hoe	10		
70 loader	10		
John Deere skid steer	4		

LABOR

NAME	OCCUPATION	START TIME:	STOP TIME:	HOURS
Randy crew	Foreman 5 guys	6:30	4:30	50
Jason	Safety	6:30	4:30	10
Brown's concrete	5 guys	0:00		
			Total Crew Hours for Today:	60
			Total Crew Hours Cumulative:	5,997

Details of Hauling/ Weight ticket # and tons

TRUCK	WEIGHT TICKET # / TONS	LOAD COUNT	ORIGIN	DESTINATION
Taylor dump truck	23.24 tons/000616788	1	McCartney	Borrow area rip rap ditch
Taylor dump truck	23.12 tons/000616810	2	McCartney	Borrow area rip rap ditch
Taylor dump truck	22.59 tons/000616825	3	McCartney	Borrow area rip rap ditch
Taylor dump truck	22.17 tons/000616845	4	McCartney	Borrow area rip rap ditch
Taylor dump truck	22.96 tons/000616875	5	McCartney	Borrow area rip rap ditch
Taylor dump truck	22.11 tons/000616892	6	McCartney	Borrow area rip rap ditch

Weather Report

Chance of thunderstorms. High 81. Low 68

Randy Goodwin

Solutia OU-3 Remediation Action

Construction Daily Work Report

Day # 12

Project Number/Name:	OU-3
Safety Meeting Topic:	Be aware of your surroundings
Date:	9/29/15 Tuesday

Activities/ Deliveries

Specific task working and or accomplished today:

BORROW PIT: moved top soil from borrow pit to the flat area under the power line

EQUIPMENT	HOURS	EQUIPMENT	HOURS
Rock Truck	5	Screen	
200 Tracy hoe	5	Rock truck	5
Water truck		Loader	
Pad foot roller	4	39 dozer	5

LABOR

NAME	OCCUPATION	START TIME:	STOP TIME:	HOURS
Tyler crew	Foreman 5 guys	11:00	4:30	27.5
Matt	Foreman	6:30	4:30	10
Winston Nemire	Temp Labor			
			Total Crew Hours for Today:	37.5
			Total Crew Hours Cumulative:	699.5

Details of Hauling/ Weight ticket # and tons

TRUCK	WEIGHT TICKET # / TONS	LOAD COUNT	ORIGIN	DESTINATION
Off road truck			Borrow pit	PCB cell
Off road truck			Borrow pit	PCB cell

Weather Report

Solutia OU-3 Remediation Action

Construction Daily Work Report

Day # 73

Project Number/Name:	OU-3
Safety Meeting Topic:	Chop saw and sparks setting fire
Date:	9-30-15. Wednesday

Activities/ Deliveries

Specific task working and or accomplished today:

BORROW AREA:finished up with the rip rap ditch on south side,107' long 15' wide with 18" of rip rap,and used 1,605 sq feet of 10 oz fabric.Started loading out topsoil moving it to the topsoil pile. PCB CELLS: started spraying herbicide out in front of Tyler putting down 6" of good fill. AREA A:Acker electric raised the ground wire and removed guide wire that was on the pole on the south side. AREA E: Brown's concrete worked on forming the wall and putting in rebar.Acker electric raised guide wire and ground in area e.

EQUIPMENT	HOURS	EQUIPMENT	HOURS
228 track hoe	10		
61 dozer	5		

LABOR

NAME	OCCUPATION	START TIME:	STOP TIME:	HOURS
Randy crew	Foreman 5 guys	6:30	4:30	50
Jason	Safety	6:30	4:30	10
Brown's concrete	5 guys	7:30	4:30	45
Acker electric	3 guys	9:30	11:30	6
			Total Crew Hours for Today:	111
			Total Crew Hours Cumulative:	6,108

Details of Hauling/ Weight ticket # and tons

TRUCK	WEIGHT TICKET # / TONS	LOAD COUNT	ORIGIN	DESTINATION
Taylor dump truck	Moving topsoil	14	Borrow area	Topsoil pile
Taylor dump truck	Moving topsoil	7	Borrow area	Topsoil pile

Weather Report

Cloudy. High 81. Low 63

Randy Goodwin

Solutia OU-3 Remediation Action

Construction Daily Work Report

Day # 12

Project Number/Name:	OU-3
Safety Meeting Topic:	Be aware of your surroundings
Date:	9/30/15 Wednesday

Activities/ Deliveries

Specific task working and or accomplished today:
Load count: 45 BORROW PIT: hauled screened material to the PCB cell

EQUIPMENT	HOURS	EQUIPMENT	HOURS
Rock Truck	10	Screen	10
200 Tracy hoe	10	Rock truck	10
Water truck		Loader	10
Pad foot roller	10	39 dozer	10

LABOR

NAME	OCCUPATION	START TIME:	STOP TIME:	HOURS
Tyler crew	Foreman 5 guys	6:30	5:00	52.5
Winston	Temp worker	6:30	5:00	10.5
Matt	Foreman	6:30	5:00	10.5
			Total Crew Hours for Today:	73.5
			Total Crew Hours Cumulative:	773

Details of Hauling/ Weight ticket # and tons

TRUCK	WEIGHT TICKET # / TONS	LOAD COUNT	ORIGIN	DESTINATION
Off road truck		30	Borrow pit	PCB cell
Off road truck		15	Borrow pit	PCB cell

Weather Report

Solutia OU-3 Remediation Action

Construction Daily Work Report

Day # 74

Project Number/Name:	OU-3
Safety Meeting Topic:	Ppe
Date:	10-1-15. Thursday

Activities/ Deliveries

Specific task working and or accomplished today:
BORROW AREA:loaded out 106 loads of topsoil moved to topsoil pile. PCB CELL:dug test holes for Tyler checking the thickness of the fill dirt,and finished spraying herbicide on PCB cell. AREA E: Brown's concrete continued forming and tieing rebar for the footer and wall.

EQUIPMENT	HOURS	EQUIPMENT	HOURS
228 track hoe	10		
61 dozer	10		

LABOR

NAME	OCCUPATION	START TIME:	STOP TIME:	HOURS
Randy crew	Foreman 5 guys	6:30	4:30	50
Jason	Safety	8:00	4:30	10
Brown's concrete	6 guys	7:30	4:30	54
			Total Crew Hours for Today:	114
			Total Crew Hours Cumulative:	6,222

Details of Hauling/ Weight ticket # and tons

TRUCK	WEIGHT TICKET # / TONS	LOAD COUNT	ORIGIN	DESTINATION
Taylor dump truck		55	Borrow area topsoil	Topsoil pile
Taylor dump truck		51	Borrow area topsoil	Topsoil pile

Weather Report

Chance of rain. High 70. Low 59

Randy Goodwin

Solutia OU-3 Remediation Action

Construction Daily Work Report

Day # 14

Project Number/Name:	OU-3
Safety Meeting Topic:	Be aware of your surroundings
Date:	10/1/15 Thursday

Activities/ Deliveries

Specific task working and or accomplished today:
Load count: 50 BORROW PIT: hauled screened material to the PCB cell

EQUIPMENT	HOURS	EQUIPMENT	HOURS
Rock Truck	10	Screen	10
200 Tracy hoe	10	Rock truck	10
Water truck		Loader	10
Pad foot roller	10	39 dozer	10

LABOR

NAME	OCCUPATION	START TIME:	STOP TIME:	HOURS
Tyler crew	Foreman 5 guys	6:30	4:30	50
Winston	Temp worker	6:30	4:30	10
Matt	Foreman	6:30	4:30	10
			Total Crew Hours for Today:	70
			Total Crew Hours Cumulative:	913

Details of Hauling/ Weight ticket # and tons

TRUCK	WEIGHT TICKET # / TONS	LOAD COUNT	ORIGIN	DESTINATION
Off road truck		26	Borrow pit	PCB cell
Off road truck		24	Borrow pit	PCB cell

Weather Report

Solutia OU-3 Remediation Action

Construction Daily Work Report

Day # 75

Project Number/Name:	OU-3
Safety Meeting Topic:	Keep speed down
Date:	10-2-15. Friday

Activities/ Deliveries

Specific task working and or accomplished today:

AREA E: Brown's concrete continued on tieing rebar for the wall and footer. BORROW AREA: finished loading out topsoil pile moving it under power lines with the off road trucks. PCB CELLS: put bridging area in over spot east side of PCB cell,8" of 24 stone,4" of base,10oz fabric,51' long x 25' wide 1,275 sq feet of 10 oz fabric

EQUIPMENT	HOURS	EQUIPMENT	HOURS
228 track hoe	7.5		
250 loader	7.5		

LABOR

NAME	OCCUPATION	START TIME:	STOP TIME:	HOURS
Randy crew	Foreman 5 guys	6:30	2:00	37.5
Jason	Safety	6:30	2:00	7.5
Brown's concrete	5 guys	7:30	4:00	42.5
			Total Crew Hours for Today:	87.5
			Total Crew Hours Cumulative:	6,309.50

Details of Hauling/ Weight ticket # and tons

TRUCK	WEIGHT TICKET # / TONS	LOAD COUNT	ORIGIN	DESTINATION
Bell off road truck		6	Borrow area	Topsoil pile
Valvo off road truck		6	Borrow area	Topsoil pile

Weather Report

Cloudy. High 73. Low 60

Randy Brown

Solutia OU-3 Remediation Action

Construction Daily Work Report

Day # 14

Project Number/Name:	OU-3
Safety Meeting Topic:	Be aware of your surroundings
Date:	10/2/15 Friday

Activities/ Deliveries

Specific task working and or accomplished today:

BORROW PIT: moved top soil, piled up the ashes from the chip pile that burnt. Filled over the eastern most soft area with 10 ounce fabric, 24 stone, and base. Rained most of the day.

EQUIPMENT	HOURS	EQUIPMENT	HOURS
Rock Truck	5	Screen	
200 Tracy hoe	5	Rock truck	
Water truck		Loader	
Pad foot roller		39 dozer	

LABOR

NAME	OCCUPATION	START TIME:	STOP TIME:	HOURS
Tyler crew	Foreman 4 guys	6:30	2:00	30
Winston	Temp worker	6:30	10:30	4
Matt	Foreman	6:30	2:00	7.5
	Statlin Ponder	0:00	0:00	0
			Total Crew Hours for Today:	41.5
			Total Crew Hours Cumulative:	884.5

Details of Hauling/ Weight ticket # and tons

TRUCK	WEIGHT TICKET # / TONS	LOAD COUNT	ORIGIN	DESTINATION
TC truck	BASE	3	Vulcan	PCB cell
TC truck	BASE	3	Vulcan	PCB cell
TC truck	24 stone	4	McCartney	PCB cell
TC truck	24 stone	2	McCartney	PCB cell
TC truck	24 stone	2	McCartney	PCB cell

Weather Report

70% chance of rain

Solutia OU-3 Remediation Action

Construction Daily Work Report

Day # 76

Project Number/Name:	OU-3
Safety Meeting Topic:	Caution wet surface,ppe
Date:	10-5-15. Monday

Activities/ Deliveries

Specific task working and or accomplished today:

AREA E: Brown's concrete tied rebar and put in water stop get ready to pour concrete tomorrow. AUTOCLAVE:went and got grate and put in for the box out on the south side behind stairs at autoclave. PCB CELLS: Started on the other bridging area got 10 oz fabric down and 24 stone got about half of the base put down 74' long x 27' wide used 1,998 sq feet of 10 oz fabric.

EQUIPMENT	HOURS	EQUIPMENT	HOURS
228 track hoe	7.5		
Cat loader	4.5		

LABOR

NAME	OCCUPATION	START TIME:	STOP TIME:	HOURS
Randy crew	Foreman 4 guys	6:30	4:30	40
Jason	Safety	6:30	4:30	10
Brown's concrete	4 guys	7:00	5:00	40
Kevin		0:00		
Total Crew Hours for Today:				90
Total Crew Hours Cumulative:				6,399.50

Details of Hauling/ Weight ticket # and tons

TRUCK	WEIGHT TICKET # / TONS	LOAD COUNT	ORIGIN	DESTINATION

Weather Report

Cloudy. High 76. Low 61

Randy Goodwin

Solutia OU-3 Remediation Action

Construction Daily Work Report

Day # 15

Project Number/Name:	OU-3
Safety Meeting Topic:	Be aware of your surroundings
Date:	10/5/10 Monday

Activities/ Deliveries

Specific task working and or accomplished today:
Load count: 60 BORROW PIT: hauled screened material to PCB cell

EQUIPMENT	HOURS	EQUIPMENT	HOURS
Rock Truck	10	Screen	10
200 Tracy hoe	10	Rock truck	10
Water truck		Loader	10
Pad foot roller	10	39 dozer	10

LABOR

NAME	OCCUPATION	START TIME:	STOP TIME:	HOURS
Tyler crew	Foreman 5 guys	6:30	5:00	52.5
Winston	Temp worker	6:30	5:00	10.5
Matt	Foreman	6:30	5:00	10.5
			Total Crew Hours for Today:	73.5
			Total Crew Hours Cumulative:	958

Details of Hauling/ Weight ticket # and tons

TRUCK	WEIGHT TICKET # / TONS	LOAD COUNT	ORIGIN	DESTINATION
TC truck	Class 1	1	McCartney	Borrow pit
Off road truck		30	Borrow pit	PCB cell
Off road truck		30	Borrow pit	PCB cell

Weather Report

Solutia OU-3 Remediation Action

Construction Daily Work Report

Day # 77

Project Number/Name:	OU-3
Safety Meeting Topic:	Safety vs production
Date:	10-6-15. Tuesday

Activities/ Deliveries

Specific task working and or accomplished today:

AREA E: Brown's concrete poured 373' of footer and 6" lip up off the footer for the wall. AREA A: removed the tops off 3 PIV valves to check the thickness of the stems and see if they were round or square. PCB CELL: finished up the base on the bridging area. BORROW AREA: stripped topsoil ahead of Tyler HAUL ROADS: fixed some of the bad places in haul road.

EQUIPMENT	HOURS	EQUIPMENT	HOURS
228 track hoe	4		
Cat loader	4		
61 dozer	2.5		
John Deere skid steer	2.5		

LABOR

NAME	OCCUPATION	START TIME:	STOP TIME:	HOURS
Randy crew	Foreman 4 guys	6:30	4:30	40
Jason	Safety	6:30	4:30	10
Brown's concrete	8 guys	6:30	3:30	72
Kevin		0:00		
			Total Crew Hours for Today:	122
			Total Crew Hours Cumulative:	6,521.50

Details of Hauling/ Weight ticket # and tons

TRUCK	WEIGHT TICKET # / TONS	LOAD COUNT	ORIGIN	DESTINATION

Weather Report

Partly cloudy. High 82. Low 60

Solutia OU-3 Remediation Action

Construction Daily Work Report

Day # 16

Project Number/Name:	OU-3
Safety Meeting Topic:	Be aware of your surroundings
Date:	10/6/15 Tuesday

Activities/ Deliveries

Specific task working and or accomplished today:

Load count: 53 BORROW PIT: hauled screened material to PCB cell. Had a few wet areas in the fill from the rain bladed them up to air out and dry.

EQUIPMENT	HOURS	EQUIPMENT	HOURS
Rock Truck	10	Screen	10
200 Tracy hoe	10	Rock truck	10
Water truck		Loader	10
Pad foot roller	10	39 dozer	10

LABOR

NAME	OCCUPATION	START TIME:	STOP TIME:	HOURS
Tyler crew	Foreman 5 guys	6:30	5:30	55
Winston	Temp worker	6:30	5:30	11
Matt	Foreman	6:30	5:30	11
			Total Crew Hours for Today:	77
			Total Crew Hours Cumulative:	1035

Details of Hauling/ Weight ticket # and tons

TRUCK	WEIGHT TICKET # / TONS	LOAD COUNT	ORIGIN	DESTINATION
TC truck		14	Borrow pit	PCB cell
Off road truck		20	Borrow pit	PCB cell
Off road truck		19	Borrow pit	PCB cell

Weather Report

Solutia OU-3 Remediation Action

Construction Daily Work Report

Day # 78

Project Number/Name:	OU-3
Safety Meeting Topic:	Changing job site
Date:	10-7-15. Wednesday

Activities/ Deliveries

Specific task working and or accomplished today:

AREA A: Brown's concrete formed up both sides for the 6" concrete pad south side area a by the main solutia gate 181'. BORROW AREA:stripped topsoil ahead of Tyler. HAUL ROADS: fixed bad places on haul road and kelp roads watered down

EQUIPMENT	HOURS	EQUIPMENT	HOURS
61 dozer	10		
John Deere skid steer	6		

LABOR

NAME	OCCUPATION	START TIME:	STOP TIME:	HOURS
Randy crew	Foreman 4 guys	6:30	4:30	40
Jason	Safety	6:30	4:30	10
Brown's concrete	4 guys	7:00	4:30	38
Kevin		0:00		
			Total Crew Hours for Today:	88
			Total Crew Hours Cumulative:	6,609.50

Details of Hauling/ Weight ticket # and tons

TRUCK	WEIGHT TICKET # / TONS	LOAD COUNT	ORIGIN	DESTINATION

Weather Report

Partly cloudy. High 85. Low 61

Randy Goodwin

Solutia OU-3 Remediation Action

Construction Daily Work Report

Day # 16

Project Number/Name:	OU-3
Safety Meeting Topic:	Be aware of your surroundings
Date:	10/7/15 Wednesday

Activities/ Deliveries

Specific task working and or accomplished today:
Load count: 58 BORROW PIT: hauled screened material to PCB cell.

EQUIPMENT	HOURS	EQUIPMENT	HOURS
Rock Truck	10	Screen	10
200 Tracy hoe	10	Rock truck	10
Water truck	10	Loader	10
Pad foot roller	10	39 dozer	10

LABOR

NAME	OCCUPATION	START TIME:	STOP TIME:	HOURS
Tyler crew	Foreman 5 guys	6:30	5:30	55
Winston	Temp worker	6:30	5:30	11
Matt	Foreman	6:30	5:30	11
			Total Crew Hours for Today:	77
			Total Crew Hours Cumulative:	1112

Details of Hauling/ Weight ticket # and tons

TRUCK	WEIGHT TICKET # / TONS	LOAD COUNT	ORIGIN	DESTINATION
TC truck		18	Borrow pit	PCB cell
Off road truck		18	Borrow pit	PCB cell
Off road truck		22	Borrow pit	PCB cell

Weather Report

Solutia OU-3 Remediation Action

Construction Daily Work Report

Day # 79

Project Number/Name:	OU-3
Safety Meeting Topic:	Spill kit
Date:	10-8-15. Thursday

Activities/ Deliveries 1 load of geotextile fabric

Specific task working and or accomplished today:

AREA A: Brown's concrete formed and tied rebar for 6" concrete pad south side area a along side the fence they tied 4 20'x16' squares with rebar and formed up.
BORROW AREA:loaded of 40 loads of topsoil and hauled to topsoil pile under the power lines. Unloaded 27 rollers of geotextile fabric for the PCB cell 1 truck load.

EQUIPMENT	HOURS	EQUIPMENT	HOURS
228 track hoe	10		
61 dozer	10		
Valvo off road truck	10		
250 loader	2.5		

LABOR

NAME	OCCUPATION	START TIME:	STOP TIME:	HOURS
Randy crew	Foreman 5 guys	6:30	4:30	40
Jason	Safety	6:30	4:30	10
Brown's concrete	5 guys	7:30	4:00	42.5
Kevin		0:00		
			Total Crew Hours for Today:	92.5
			Total Crew Hours Cumulative:	6,702

Details of Hauling/ Weight ticket # and tons

TRUCK	WEIGHT TICKET # / TONS	LOAD COUNT	ORIGIN	DESTINATION

Weather Report

Sunny. High 83. Low 63.

Solutia OU-3 Remediation Action

Construction Daily Work Report

Day # 18

Project Number/Name:	OU-3
Safety Meeting Topic:	Be aware of your surroundings
Date:	10/8/15 Thursday

Activities/ Deliveries

Specific task working and or accomplished today:

Load count: 42 BORROW PIT: hauled screened material to PCB cell. Had a few wet areas in the fill from the rain bladed them up to air out and dry.

EQUIPMENT	HOURS	EQUIPMENT	HOURS
Rock Truck	10	Screen	10
200 Tracy hoe	10	Rock truck	10
Water truck		Loader	10
Pad foot roller	10	39 dozer	10

LABOR

NAME	OCCUPATION	START TIME:	STOP TIME:	HOURS
Tyler crew	Foreman 5 guys	6:30	5:30	55
Winston	Temp worker	6:30	5:30	11
Matt	Foreman	6:30	5:30	11
			Total Crew Hours for Today:	77
			Total Crew Hours Cumulative:	1189

Details of Hauling/ Weight ticket # and tons

TRUCK	WEIGHT TICKET # / TONS	LOAD COUNT	ORIGIN	DESTINATION
TC truck		14	Borrow pit	PCB cell
Off road truck		14	Borrow pit	PCB cell
Off road truck		14	Borrow pit	PCB cell
TC TRUCK	Load of sand	1	Webb	PCB cell

Weather Report

Solutia OU-3 Remediation Action

Construction Daily Work Report

Day # 80

Project Number/Name:	OU-3
Safety Meeting Topic:	Traffic
Date:	10-9-15. Friday

Activities/ Deliveries 1 load of geotextile fabric

Specific task working and or accomplished today:

PCB CELLS:unloaded 27 rolls of geotextile fabric 1 truck load. BORROW AREA: stripped topsoil and loaded out and moved to topsoil pile. AREA A: Brown's concrete poured 4 squares south side of area a by main solutia gate and tied rebar in 1 other square.

EQUIPMENT	HOURS	EQUIPMENT	HOURS
228 track hoe	6		
61 dozer	10		

LABOR

NAME	OCCUPATION	START TIME:	STOP TIME:	HOURS
Randy crew	Foreman 3 guys	6:30	11:00	13.5
Jason	Safety	6:30	4:30	10
Brown's concrete	6 guys	6:30	4:00	57
Deon	Laborer	6:30	4:30	10
Kevin	Laborer	0:00		
			Total Crew Hours for Today:	90.5
			Total Crew Hours Cumulative:	6,792.50

Details of Hauling/ Weight ticket # and tons

TRUCK	WEIGHT TICKET # / TONS	LOAD COUNT	ORIGIN	DESTINATION

Weather Report

Partly cloudy High 83. Low 61

Solutia OU-3 Remediation Action

Construction Daily Work Report

Day # 19

Project Number/Name:	OU-3
Safety Meeting Topic:	Be aware of your surroundings
Date:	10/9/15 Friday

Activities/ Deliveries

Specific task working and or accomplished today:

Load count: 16 BORROW PIT: hauled screened material to PCB cell. Had to replace the screens on the screen. Some of the braces in the screen were broke had to weld them up.

EQUIPMENT	HOURS	EQUIPMENT	HOURS
Rock Truck	5	Screen	5
200 Tracy hoe	5	Rock truck	5
Water truck		Loader	5
Pad foot roller	5	39 dozer	5

LABOR

NAME	OCCUPATION	START TIME:	STOP TIME:	HOURS
Tyler crew	Foreman 5 guys	6:30	5:30	55
Winston	Temp worker	6:30	5:30	11
Matt	Foreman	6:30	5:30	11
			Total Crew Hours for Today:	77
			Total Crew Hours Cumulative:	1266

Details of Hauling/ Weight ticket # and tons

TRUCK	WEIGHT TICKET # / TONS	LOAD COUNT	ORIGIN	DESTINATION
TC truck			Borrow pit	PCB cell
Off road truck		8	Borrow pit	PCB cell
Off road truck		8	Borrow pit	PCB cell

Weather Report

Solutia OU-3 Remediation Action

Construction Daily Work Report

Day # 19

Project Number/Name:	OU-3
Safety Meeting Topic:	Be aware of your surroundings
Date:	10/10/15 Saturday

Activities/ Deliveries

Specific task working and or accomplished today:
Load count: 0 BORROW PIT: Rained Friday night to wet to haul. Greesed equipment.

EQUIPMENT	HOURS	EQUIPMENT	HOURS
Rock Truck		Screen	
200 Tracy hoe		Rock truck	
Water truck		Loader	
Pad foot roller		39 dozer	

LABOR

NAME	OCCUPATION	START TIME:	STOP TIME:	HOURS
Tyler crew	Foreman 4 guys	6:30	8:30	8
Winston	Temp worker	6:30	8:30	2
Matt	Foreman	6:30	8:30	2
Stalin Ponder	Labor	0:00	0:00	
			Total Crew Hours for Today:	12
			Total Crew Hours Cumulative:	1278

Details of Hauling/ Weight ticket # and tons

TRUCK	WEIGHT TICKET # / TONS	LOAD COUNT	ORIGIN	DESTINATION
TC truck		1	Borrow pit	PCB cell
Off road truck			Borrow pit	PCB cell
Off road truck			Borrow pit	PCB cell

Weather Report

Solutia OU-3 Remediation Action

Construction Daily Work Report

Day # 81

Project Number/Name:	OU-3
Safety Meeting Topic:	Awareness
Date:	10-12-15. Monday

Activities/ Deliveries

Specific task working and or accomplished today:

BORROW AREA:stripped topsoil and piled up. AREA A:Brown's concrete tied rebar in 2 squares and poured 3 20' x 16' squares. PCB CELLS:stared on the anchor trench for the liner on th south side of pcb cell dug 40' of trench.

EQUIPMENT	HOURS	EQUIPMENT	HOURS
61 dozer	6		
228 track hoe	6		
Vermeer mini hoe	6		
Bell rock truck	10.5		

LABOR

NAME	OCCUPATION	START TIME:	STOP TIME:	HOURS
Randy crew	Foreman 3 guys	6:30	5:00	31.5
Jason	Safety	0:00		
Kevin		0:00		
Chris		6:30	5:30	11
Brown's concrete	8 guys	7:00	4:00	72
			Total Crew Hours for Today:	114.5
			Total Crew Hours Cumulative:	6,907

Details of Hauling/ Weight ticket # and tons

TRUCK	WEIGHT TICKET # / TONS	LOAD COUNT	ORIGIN	DESTINATION

Weather Report

Partly cloudy. High 81. Low 63

Solutia OU-3 Remediation Action

Construction Daily Work Report

Day # 19

Project Number/Name:	OU-3
Safety Meeting Topic:	Be aware of your surroundings
Date:	10/12/15 Monday

Activities/ Deliveries

Specific task working and or accomplished today:

Load count: 54 BORROW PIT: Hauled screened material to the PCB cell. PFF arrived on the job site. They filled sand bags. Surveyors started there lazier scanning

EQUIPMENT	HOURS	EQUIPMENT	HOURS
Rock Truck	10	Screen	10
200 Tracy hoe	10	Rock truck	10
Water truck		Loader	10
Pad foot roller	10	39 dozer	10

LABOR

NAME	OCCUPATION	START TIME:	STOP TIME:	HOURS
Tyler crew	Foreman 4 guys	6:30	5:30	44
Winston	Temp worker	6:30	5:30	11
Matt	Foreman	6:30	5:30	11
Stalin Ponder	Labor	0:00	0:00	
Plastic Fushion	8 guys	6:30	4:00	76
			Total Crew Hours for Today:	104
			Total Crew Hours Cumulative:	1420

Details of Hauling/ Weight ticket # and tons

TRUCK	WEIGHT TICKET # / TONS	LOAD COUNT	ORIGIN	DESTINATION
Jerry Trucking		12	Borrow pit	PCB cell
Off road truck		20	Borrow pit	PCB cell
Off road truck		22	Borrow pit	PCB cell

Weather Report

Solutia OU-3 Remediation Action

Construction Daily Work Report

Day # 82

Project Number/Name:	OU-3
Safety Meeting Topic:	Wet conditions,traffic
Date:	10-13-15. Tuesday

Activities/ Deliveries 1 load of geotextile fabric,PIV replacements

Specific task working and or accomplished today:

BORROW AREA: hauled topsoil to topsoil pile under power lines 85 loads. AREA A: Brown's concrete poured 20' x 13' square and tied rebar in 2 other squares. AREA E: Brown's concrete put forms together for the wall form. PCB CELL: removed 40' of existing fence and put up temporary fence in its place south east corner of PCB cell

EQUIPMENT	HOURS	EQUIPMENT	HOURS
61 dozer	10		
Valvo Rock truck	10		
Bell rock truck	10		
John Deere skid steer	6		

LABOR

NAME	OCCUPATION	START TIME:	STOP TIME:	HOURS
Randy crew	Foreman 5 guys	6:30	4:30	50
Jason	Safety	6:30	4:30	10
Brown's concrete	7 guys	7:00	4:00	63
			Total Crew Hours for Today:	123
			Total Crew Hours Cumulative:	7,030

Details of Hauling/ Weight ticket # and tons

TRUCK	WEIGHT TICKET # / TONS	LOAD COUNT	ORIGIN	DESTINATION

Weather Report

Sunny. High 80. Low 61

Solutia OU-3 Remediation Action

Construction Daily Work Report

Day # 19

Project Number/Name:	OU-3
Safety Meeting Topic:	Be aware of your surroundings
Date:	10/13/15 Tuesday

Activities/ Deliveries

Specific task working and or accomplished today:

Load count: BORROW PIT: rained Monday night so it was to wet to haul. moved top soil PCB CELL: made a new road to the south east corner of the PCB cell

EQUIPMENT	HOURS	ler	HOURS
Rock Truck		Screen	
200 Tracy hoe		Rock truck	
Water truck		Loader	
Pad foot roller		39 dozer	

LABOR

NAME	OCCUPATION	START TIME:	STOP TIME:	HOURS
Tyler crew	Foreman 3 guys	6:30	4:30	30
Winston	Temp worker	6:30	10:30	4
Matt	Foreman	6:30	4:00	10
Stalin Ponder	Labor	0:00	0:00	
Jonathan Tenney	Labor	0:00	0:00	
Plastic Fushion	8 guys	6:30	9:30	24
			Total Crew Hours for Today:	68
			Total Crew Hours Cumulative:	1488

Details of Hauling/ Weight ticket # and tons

TRUCK	WEIGHT TICKET # / TONS	LOAD COUNT	ORIGIN	DESTINATION
TC truck			Borrow pit	PCB cell
Off road truck			Borrow pit	PCB cell
Off road truck			Borrow pit	PCB cell

Weather Report

Solutia OU-3 Remediation Action

Construction Daily Work Report

Day # 83

Project Number/Name:	OU-3
Safety Meeting Topic:	Ppe,
Date:	10-14-15. Wednesday

Activities/ Deliveries

Specific task working and or accomplished today:

AREA A: Brown's concrete finished up the 2 squares south of area a for 6" cap and Taylor herbicide the 9' wide down the fence line where the 6" cap concrete goes down south east side. AREA E: Brown's started form on the wall. PCB CELL: put down 43 loads of borrow dirt for the 6" cap on east side of the cell started hauling around 10:30,dug 200' of anchor trench from south east corner heading west.Started clipping the cell with the grader.

EQUIPMENT	HOURS	EQUIPMENT	HOURS
39 dozer	10	Grader	2
Bell rock truck	10		
Sakai roller	10		
Rented mini hoe	8		

LABOR

NAME	OCCUPATION	START TIME:	STOP TIME:	HOURS
Randy crew	Foreman 5 guys	6:30:00a	7:00p	62.5
Jason	Safety	6:30a	7:00p	12.5
Brown's concrete	7 guys	7:00	4:30	66.5
Plastic fusion	8 guys	6:30	11:30	40
Bud		1:00	3:00	2
			Total Crew Hours for Today:	183.5
			Total Crew Hours Cumulative:	7,213.50

Details of Hauling/ Weight ticket # and tons

TRUCK	WEIGHT TICKET # / TONS	LOAD COUNT	ORIGIN	DESTINATION
Valvo rock truck		15	Borrow area	PCB cell
Bell rock truck		18	Borrow area	PCB cell
Jerry dump truck		10	Borrow area	PCB cell

Weather Report

Sunny. High 80. Low 50

Solutia OU-3 Remediation Action

Construction Daily Work Report

Day # 84

Project Number/Name:	OU-3
Safety Meeting Topic:	Ppe,spotters
Date:	10-15-15. Thursday

Activities/ Deliveries 1 load of geotextile fabric

Specific task working and or accomplished today:

AREA A:Brown's concrete took out some of the forms on the 6" pad that they had poured. AREA E: Brown's concrete formed up on the wall and tied rebar in the wall. PCB CELL: hauled 46 loads of fill dirt and rolled in.Graded off over half of the cell and smooth rolled in.Plastic fusion started stringing out the geotextile fabric.Dug out all the anchor trench except where for about 20'.Dug out 530' of trench

EQUIPMENT	HOURS	EQUIPMENT	HOURS
39 dozer	12.5	Smooth drum roller	6
Sakai roller	12.5	Motor grader	7
Rented mini hoe	12.5		
Bell rock truck	12.5		

LABOR

NAME	OCCUPATION	START TIME:	STOP TIME:	HOURS
Randy crew	Foreman 5 guys	6:30	7:00	62.5
Jason	Safety	6:30	7:00	12.5
Brown's concrete	6 guys	11:30	4:30	30
Plastic fusion	8 guys	6:30	3:00	68
Bud		8:00	2:30	6.5
			Total Crew Hours for Today:	179.5
			Total Crew Hours Cumulative:	7,393

Details of Hauling/ Weight ticket # and tons

TRUCK	WEIGHT TICKET # / TONS	LOAD COUNT	ORIGIN	DESTINATION
Taylor dump truck		14	Borrow area	PCB cell
Bell rock truck		14	Borrow area	PCB cell
Valvo rock truck		18	Borrow area	PCB cell

Weather Report

Sunny. High 83. Low 55

Solutia OU-3 Remediation Action

Construction Daily Work Report

Day # 85

Project Number/Name:	OU-3
Safety Meeting Topic:	Ppe,
Date:	10-16-15. Friday

Activities/ Deliveries

Specific task working and or accomplished today:

AREA A:siberton fence put up new fence on the south of area a form main gate north and drove new poles up east side we moved temporary fence around south east side. AREA E: Brown's concrete tied rebar and formed on the wall area e. PCB CELL:finished hauling the 6" cap dirt on the east side and had to fill up the north side to the flag limits and fixed wash out spots on the west side rolled in and graded off and smooth rolled in,finished up the anchor trench 72' of it,plastic fusion started putting in liner around 10:30 a.m.

EQUIPMENT	HOURS	EQUIPMENT	HOURS
39 dozer	4	John Deere skid steer	5
Sakai roller	4	Mini hoe	4
Smooth drum roller	5		
Grader	5		

LABOR

NAME	OCCUPATION	START TIME:	STOP TIME:	HOURS
Randy crew	Foreman 5 guys	6:30	5:00	52.5
Jason	Safety	6:30	5:00	10.5
Brown's concrete	5 guys	7:00	12:00	25
Plastic fusion	8 guys	6:30	5:30	88
Siberton fence	4 guys	9:30	5:00	30
			Total Crew Hours for Today:	206
			Total Crew Hours Cumulative:	7,599

Details of Hauling/ Weight ticket # and tons

TRUCK	WEIGHT TICKET # / TONS	LOAD COUNT	ORIGIN	DESTINATION
Bell off road truck		3	Borrow area	PCB cell
Valvo off road truck		3	Borrow area	PCB cell

Weather Report

Sunny. High 78. Low 43

Solutia OU-3 Remediation Action

Construction Daily Work Report

Day # 86

Project Number/Name:	OU-3
Safety Meeting Topic:	
Date:	10-17-15. Saturday

Activities/ Deliveries

Specific task working and or accomplished today:
PCB CELL: plastic continued putting in liner on 6" cap

EQUIPMENT	HOURS	EQUIPMENT	HOURS

LABOR

NAME	OCCUPATION	START TIME:	STOP TIME:	HOURS
Randy crew	Foreman 5 guys			
Jason	Safety			
Plastic fusion	8 guys	6:30	5:30	88
Ellis		7:30	5:30	10
			Total Crew Hours for Today:	98
			Total Crew Hours Cumulative:	7,697

Details of Hauling/ Weight ticket # and tons

TRUCK	WEIGHT TICKET # / TONS	LOAD COUNT	ORIGIN	DESTINATION

Weather Report

Sunny. High 70. Low. 48

Randy Goodwin

Solutia OU-3 Remediation Action

Construction Daily Work Report

Day # 87

Project Number/Name:	OU-3
Safety Meeting Topic:	
Date:	10-18-15. Sunday

Activities/ Deliveries

Specific task working and or accomplished today:
PCB CELL: plastic fusion continued putting down liner

EQUIPMENT	HOURS	EQUIPMENT	HOURS

LABOR

NAME	OCCUPATION	START TIME:	STOP TIME:	HOURS
Randy crew	Foreman 5 guys			
Jason	Safety			
Plastic fusion	8 guys	6:30	12:30	48
Ellis		7:00	12:30	5.5
			Total Crew Hours for Today:	53.5
			Total Crew Hours Cumulative:	7,750.50

Details of Hauling/ Weight ticket # and tons

TRUCK	WEIGHT TICKET # / TONS	LOAD COUNT	ORIGIN	DESTINATION

Weather Report

Sunny. High 66. Low 39

Randy Goodwin

Solutia OU-3 Remediation Action

Construction Daily Work Report

Day # 88

Project Number/Name:	OU-3
Safety Meeting Topic:	Safety equipment sheets
Date:	10-19-15. Monday

Activities/ Deliveries

Specific task working and or accomplished today:

AREA E: Brown's concrete continued forming wall and tieing rebar. AREA A:removed 203' of existing fence and cut poles flush with the ground,put up 203' of temporary fence and hauled old fence top top by job trailer.Cleaned up road where Brown's concrete poured the 6" cap and put base cover in the notch out area where the main gate opens.

EQUIPMENT	HOURS	EQUIPMENT	HOURS
John deer skid steer	8		

LABOR

NAME	OCCUPATION	START TIME:	STOP TIME:	HOURS
Randy crew	Foreman 5 guys	6:30	4:30	50
Jason	Safety	6:30	4:30	10
Brown's concrete	7 guys	7:00	4:00	63
			Total Crew Hours for Today:	123
			Total Crew Hours Cumulative:	7,873.50

Details of Hauling/ Weight ticket # and tons

TRUCK	WEIGHT TICKET # / TONS	LOAD COUNT	ORIGIN	DESTINATION

Weather Report

Sunny. High 70. Low 40

Solutia OU-3 Remediation Action

Construction Daily Work Report

Day # _____

Project Number/Name:	OU-3
Safety Meeting Topic:	Be aware of your surroundings
Date:	10/19/15 Monday

Activities/ Deliveries

Specific task working and or accomplished today:

Load count: 15 loads of top soil hauled in from sports complex. BORROW PIT: started stock piling screened material. PCB CELL: PFF is putting poly down on the PCB CELL

EQUIPMENT	HOURS	EQUIPMENT	HOURS
Rock Truck	10	Screen	10
200 track hoe	10	Rock truck	10
Water truck		Loader	10
Pad foot roller		D61 dozer	6

LABOR

NAME	OCCUPATION	START TIME:	STOP TIME:	HOURS
Tyler crew	Forman 5 guys	6:30	6:00	57.5
Matt	Foreman	6:30	6:00	11.5
Jonathan Tenney	Labor	0:00	0:00	
Plastic Fushion	8 guys	6:30	4:30	80
			Total Crew Hours for Today:	149
			Total Crew Hours Cumulative:	1637

Details of Hauling/ Weight ticket # and tons

TRUCK	WEIGHT TICKET # / TONS	LOAD COUNT	ORIGIN	DESTINATION
TC truck		5	Sports complex	Borrow pit
TC truck		5	Sports complex	Borrow pit
TC truck		5	Sports complex	Borrow pit

Weather Report

Solutia OU-3 Remediation Action

Construction Daily Work Report

Day # 89

Project Number/Name:	OU-3
Safety Meeting Topic:	Equipment inspection
Date:	10-20-15. Tuesday

Activities/ Deliveries 1- load of base

Specific task working and or accomplished today:

AREA E: Brown's concrete continued forming and tieing rebar for the wall. AREA A: graded out 8.5" wide by 6" of base for the 6" cap cover removed grass that was by existing curb that was high then graded out the rest with base heading east to the pump station and power box pad graded 65' long.

EQUIPMENT	HOURS	EQUIPMENT	HOURS
78 mini hoe	10		
John deer skid steer	10		

LABOR

NAME	OCCUPATION	START TIME:	STOP TIME:	HOURS
Randy crew	Foreman 5 guys	6:30	4:30	50
Jason	Safety	6:30	4:30	10
Brown's concrete	6 guys	7:00	3:30	51
			Total Crew Hours for Today:	111
			Total Crew Hours Cumulative:	7,984.50

Details of Hauling/ Weight ticket # and tons

TRUCK	WEIGHT TICKET # / TONS	LOAD COUNT	ORIGIN	DESTINATION
Taylor dump truck	16732858/25.88 tons	1	Vulcan	Area a

Weather Report

Sunny. High 75. Low 45

Solutia OU-3 Remediation Action

Construction Daily Work Report

Day # _____

Project Number/Name:	OU-3
Safety Meeting Topic:	Be aware of your surroundings
Date:	10/20/15 Tuesday

Activities/ Deliveries

Specific task working and or accomplished today:

Load count: 57 loads of top soil hauled in from sports complex. BORROW PIT: continued stock piling screened material. PCB CELL: PFF is putting poly down on the PCB CELL

EQUIPMENT	HOURS	EQUIPMENT	HOURS
Rock Truck	10	Screen	10
200 track hoe	10	Rock truck	10
Water truck		Loader	10
Pad foot roller		D61 dozer	6

LABOR

NAME	OCCUPATION	START TIME:	STOP TIME:	HOURS
Tyler crew	Forman 6 guys	6:30	5:00	63
Matt	Foreman	6:30	4:00	9.5
Plastic Fushion	8 guys	6:30	4:30	80
			Total Crew Hours for Today:	152.5
			Total Crew Hours Cumulative:	1789.5

Details of Hauling/ Weight ticket # and tons

TRUCK	WEIGHT TICKET # / TONS	LOAD COUNT	ORIGIN	DESTINATION
TC truck	Top soil	7	Sports complex	Borrow pit
TC truck	Top soil	7	Sports complex	Borrow pit
TC truck	Top soil	7	Sports complex	Borrow pit
Jerry truck	Top soil	7	Sports complex	Borrow pit
Jerry truck	Top soil	7	Sports complex	Borrow pit
Jerry truck	Top soil	7	Sports complex	Borrow pit
Jerry truck	Top soil	7	Sports complex	Borrow pit
Jerry truck	Top soil	8	Sports complex	Borrow pit

Weather Report

Solutia OU-3 Remediation Action

Construction Daily Work Report

Day # 90

Project Number/Name:	OU-3
Safety Meeting Topic:	Spot check equipment
Date:	10-21-15. Wednesday

Activities/ Deliveries

Specific task working and or accomplished today:

AREA E: Brown's concrete poured 230' of the wall. AREA A: dug out high spots and graded low spots with base for 6" cap 100' long x 8.5' wide down east side fence heading north then started by Clydesdale at corner of the fence a graded heading west got 10' graded.

EQUIPMENT	HOURS	EQUIPMENT	HOURS
John deer skid steer	10		
78 mini hoe	10		

LABOR

NAME	OCCUPATION	START TIME:	STOP TIME:	HOURS
Randy crew	Foreman 5 guys	6:30	5:00	52.5
Jason	Safety	6:30	4:30	10
Brown's concrete	7 guys	7:00	4:00	63
			Total Crew Hours for Today:	125.5
			Total Crew Hours Cumulative:	8,110

Details of Hauling/ Weight ticket # and tons

TRUCK	WEIGHT TICKET # / TONS	LOAD COUNT	ORIGIN	DESTINATION

Weather Report

Sunny. High 78. Low 48

Solutia OU-3 Remediation Action

Construction Daily Work Report

Day # _____

Project Number/Name:	OU-3
Safety Meeting Topic:	Be aware of your surroundings
Date:	10/21/15 Wednesday

Activities/ Deliveries

Specific task working and or accomplished today:

Load count: 27 loads of top soil hauled in from sports complex. BORROW PIT: continued stock piling screened material. PCB CELL: PFF finished putting poly down on the PCB CELL

EQUIPMENT	HOURS	EQUIPMENT	HOURS
Rock Truck	10	Screen	10
200 track hoe	10	Rock truck	10
Water truck		Loader	10
228 track hoe	10	31 dozer	10

LABOR

NAME	OCCUPATION	START TIME:	STOP TIME:	HOURS
Tyler crew	Forman 6 guys	6:30	5:30	66
Matt	Foreman	6:30	5:00	10.5
Plastic Fushion	8 guys	6:30	4:30	80
			Total Crew Hours for Today:	156.5
			Total Crew Hours Cumulative:	1946

Details of Hauling/ Weight ticket # and tons

TRUCK	WEIGHT TICKET # / TONS	LOAD COUNT	ORIGIN	DESTINATION
TC truck	Top soil	8	Sports complex	Borrow pit
TC truck			Sports complex	Borrow pit
TC truck			Sports complex	Borrow pit
Jerry truck	Top soil	8	Sports complex	Borrow pit
Jerry truck	Top soil	8	Sports complex	Borrow pit
Jerry truck	Top soil	3	Sports complex	Borrow pit
Jerry truck			Sports complex	Borrow pit
Jerry truck			Sports complex	Borrow pit

Weather Report

Solutia OU-3 Remediation Action

Construction Daily Work Report

Day # 91

Project Number/Name:	OU-3
Safety Meeting Topic:	Dust control
Date:	10-22-15. Thursday

Activities/ Deliveries

1 load of base

Specific task working and or accomplished today:

AREA E: regraded 260' of footer in area e with step up in it 6 guys,78 mini hoe,John deer skid steer 6:30 to 2:00. AREA A:siberton fence drove post on south east side beside parking lot and on the east side beside Clydesdale to next entrance road.Browns concrete started forming of 6" cap down south side to pump station and headed north past pump station.Taylor started gradient around pump station and slab of concrete down 6".

EQUIPMENT	HOURS	EQUIPMENT	HOURS
78 mini hoe	10		
John deer skid steer	10		

LABOR

NAME	OCCUPATION	START TIME:	STOP TIME:	HOURS
Randy crew	Foreman 5 guys	6:30	4:30	50
Jason	Safety	6:30	4:30	10
Brown's concrete	4 guys	7:00	4:00	36
Siberton fence	4 guys	8:30	4:00	30
Ellis		7:30	12:30	5
			Total Crew Hours for Today:	131
			Total Crew Hours Cumulative:	8,241

Details of Hauling/ Weight ticket # and tons

TRUCK	WEIGHT TICKET # / TONS	LOAD COUNT	ORIGIN	DESTINATION
Taylor dump truck	16732971/24.86 tons	1	Vulcan	Area a

Weather Report

Sunny. High 82. Low 53

Solutia OU-3 Remediation Action

Construction Daily Work Report

Day # _____

Project Number/Name:	OU-3
Safety Meeting Topic:	Be aware of your surroundings
Date:	10/22/15 Thursday

Activities/ Deliveries

Specific task working and or accomplished today:
Load count: 9 hauled ash out from borrow pit to three corners. BORROW PIT: continued stock piling screened material.

EQUIPMENT	HOURS	EQUIPMENT	HOURS
Rock Truck	10	Screen	10
200 track hoe	10	Rock truck	10
Water truck		Loader	10
228 track hoe	10	31 dozer	10

LABOR

NAME	OCCUPATION	START TIME:	STOP TIME:	HOURS
Tyler crew	Forman 5 guys	6:30	5:00	52.5
Bryan	Labor	0:00	0:00	0
Matt	Foreman	0:00	0:00	0
Plastic Fushion	8 guys	6:30	4:30	80
			Total Crew Hours for Today:	132.5
			Total Crew Hours Cumulative:	2078.5

Details of Hauling/ Weight ticket # and tons

TRUCK	WEIGHT TICKET # / TONS	LOAD COUNT	ORIGIN	DESTINATION
TC truck	Ash	3	Borrow pit	Three corners
TC truck	Ash	3	Borrow pit	Three corners
TC truck				
Jerry truck	Ash	3	Borrow pit	Three corners
Jerry truck				
Jerry truck				
Jerry truck				
Jerry truck				

Weather Report

Solutia OU-3 Remediation Action

Construction Daily Work Report

Day # 92

Project Number/Name:	OU-3
Safety Meeting Topic:	Watch for cars on 202 race weekend
Date:	10-23-15. Friday

Activities/ Deliveries

1 load of base

Specific task working and or accomplished today:

AREA E:Brown's concrete finished forming and pouring concrete for the wall on the east side 120'. AREA A: Brown's concrete formed up down the south heading east to pump station and from pump station headed north and tied rebar in 3-20' x 8'wide sections.Taylor graded from Clydesdale west 127' and tamped in for 6" cap.Siberton fence drove on the north side from Clydesdale headed west.

EQUIPMENT	HOURS	EQUIPMENT	HOURS
78 mini hoe	10		
John deer skid steer	10		
Plate tamp	3		

LABOR

NAME	OCCUPATION	START TIME:	STOP TIME:	HOURS
Randy crew	Foreman 5 guys	6:30	4:30	50
Jason	Safety	6:30	4:30	10
Brown's concrete	7 guys	7:30	4:00	59.5
Siberton fence	4 guys	9:00	4:00	28
			Total Crew Hours for Today:	147.5
			Total Crew Hours Cumulative:	8,388.50

Details of Hauling/ Weight ticket # and tons

TRUCK	WEIGHT TICKET # / TONS	LOAD COUNT	ORIGIN	DESTINATION
Taylor dump truck	16733037/25.14 tons	1	Vulcan	Area a

Weather Report

Sunny. High 84. Low 59

Solutia OU-3 Remediation Action

Construction Daily Work Report

Day # _____

Project Number/Name:	OU-3
Safety Meeting Topic:	Be aware of your surroundings
Date:	10/23/15 Friday

Activities/ Deliveries

Specific task working and or accomplished today:

Load count: 6 loads of ash hauled to three corners. All the ash has been hauled out. BORROW PIT: continued stock piling screened material.

EQUIPMENT	HOURS	EQUIPMENT	HOURS
Rock Truck	10	Screen	10
270 track hoe	10	Rock truck	10
Water truck		Loader	10
228 track hoe	10	31 dozer	10

LABOR

NAME	OCCUPATION	START TIME:	STOP TIME:	HOURS
Tyler crew	Forman 5 guys	6:30	5:00	52.5
Jonathan Tenney	Labor	6:30	2:00	7.5
Matt	Foreman	6:30	5:00	10.5
Plastic Fushion	8 guys	6:30	4:30	80
			Total Crew Hours for Today:	150.5
			Total Crew Hours Cumulative:	2229

Details of Hauling/ Weight ticket # and tons

TRUCK	WEIGHT TICKET # / TONS	LOAD COUNT	ORIGIN	DESTINATION
TC truck	As			
TC truck	Ash	3	Borrow pit	Three corners
TC truck				
Jerry truck	Ash	3	Borrow pit	Three corners
Jerry truck				
Jerry truck				
Jerry truck				
Jerry truck				

Weather Report

Solutia OU-3 Remediation Action

Construction Daily Work Report

Day # _____

Project Number/Name:	OU-3
Safety Meeting Topic:	Be aware of your surroundings
Date:	10/24/15 Saturday

Activities/ Deliveries

Specific task working and or accomplished today:
Load count: BORROW PIT: continued stock piling screened material.

EQUIPMENT	HOURS	EQUIPMENT	HOURS
Rock Truck	7	Screen	7
270 track hoe	7	Rock truck	7
Water truck		Loader	7
228 track hoe	7	31 dozer	7

LABOR

NAME	OCCUPATION	START TIME:	STOP TIME:	HOURS
Tyler crew	Forman 5 guys	6:30	2:30	40
Jonathan Tenney	Labor	0:00	0:00	0
Matt	Foreman	6:30	2:30	8
Jason	H&S	6:30	3:30	Additional 4 hrs Sunday)13
Plastic Fushion	8 guys	6:30	1:00	56
			Total Crew Hours for Today:	104
			Total Crew Hours Cumulative:	2346

Details of Hauling/ Weight ticket # and tons

TRUCK	WEIGHT TICKET # / TONS	LOAD COUNT	ORIGIN	DESTINATION
TC truck				
TC truck				
TC truck				
Jerry truck				
Jerry truck				
Jerry truck				
Jerry truck				
Jerry truck				

Weather Report

Solutia OU-3 Remediation Action

Construction Daily Work Report

Day # 93

Project Number/Name:	OU-3
Safety Meeting Topic:	Wet conditions
Date:	10-26-15. Monday

Activities/ Deliveries

16 loads of base

Specific task working and or accomplished today:

AREA A: Tyler crew started removing fence around where the weather station was until they got rained out. AREA C&D: hauled in 16 loads of base and started spreading 6" thick to be blended in with stone already there

EQUIPMENT	HOURS	EQUIPMENT	HOURS
39 dozer	3		

LABOR

NAME	OCCUPATION	START TIME:	STOP TIME:	HOURS
Randy crew	Foreman 5 guys	6:30	3:30	45
Jason	Safety	6:30	4:00	9.5
Brown's concrete		0:00		
			Total Crew Hours for Today:	54.5
			Total Crew Hours Cumulative:	8,443

Details of Hauling/ Weight ticket # and tons

TRUCK	WEIGHT TICKET # / TONS	LOAD COUNT	ORIGIN	DESTINATION
Taylor dump truck	Jimmy	6 LOADS	Vulcan	Area C&D
Taylor dump truck	Tony	6 LOADS	Vulcan	Area C&D
Taylor dump truck	Kelly	4 LOADS	Vulcan	Area C&D

Weather Report

Rain. High 66. Low 58

Randy Goodwin

Solutia OU-3 Remediation Action

Construction Daily Work Report

Day # _____

Project Number/Name:	OU-3
Safety Meeting Topic:	Be aware of your surroundings
Date:	10/26/2015 Monday

Activities/ Deliveries

Specific task working and or accomplished today:

Load count: BORROW PIT: too wet the screen dirt. Greesed equipment and done maintenance on the screen AREA A: started taking done the fence around the old weather station.

EQUIPMENT	HOURS	EQUIPMENT	HOURS
Rock Truck		Screen	
270 track hoe		Rock truck	
Water truck		Loader	
228 track hoe		31 dozer	

LABOR

NAME	OCCUPATION	START TIME:	STOP TIME:	HOURS
Tyler crew	Forman 5 guys	6:30	1:30	35
Jonathan Tenney	Labor	6:30	8:30	2
Matt	Foreman	0:00	0:00	0
Plastic Fushion	8 guys	0:00	0:00	0
			Total Crew Hours for Today:	37
			Total Crew Hours Cumulative:	2370

Details of Hauling/ Weight ticket # and tons

TRUCK	WEIGHT TICKET # / TONS	LOAD COUNT	ORIGIN	DESTINATION
TC truck				
TC truck				
TC truck				
Jerry truck				
Jerry truck				
Jerry truck				
Jerry truck				
Jerry truck				

Weather Report

Solutia OU-3 Remediation Action

Construction Daily Work Report

Day # 94

Project Number/Name:	OU-3
Safety Meeting Topic:	Hot work areas
Date:	10-27-15. Tuesday

Activities/ Deliveries 18 loads of base

Specific task working and or accomplished today:

AREA C&D: put out 18 loads of base over existing gravel,put up 173' of silt fence,and removed 143' of guard rail. AREA A:Tyler crew started digging out to raise PIV up in area a.

EQUIPMENT	HOURS	EQUIPMENT	HOURS
39 dozer	9.5		
John deer skid steer	6		

LABOR

NAME	OCCUPATION	START TIME:	STOP TIME:	HOURS
Randy crew	Foreman 4 guys	6:30	4:00	38
Jason	Safety	6:30	4:00	9.5
Deon		Vacation day	Vacation day	0
Brown's concrete		0:00		
			Total Crew Hours for Today:	47.5
			Total Crew Hours Cumulative:	8,490.50

Details of Hauling/ Weight ticket # and tons

TRUCK	WEIGHT TICKET # / TONS	LOAD COUNT	ORIGIN	DESTINATION
Taylor dump truck	Jimmy	7 loads	Vulcan	Area C&D
Taylor dump truck	Tony	6 loads	Vulcan	Area C&D
Taylor dump truck	Kelly	5 loads	Vulcan	Area C&D

Weather Report

Rain showers. High 63. Low 58

Solutia OU-3 Remediation Action

Construction Daily Work Report

Day # _____

Project Number/Name:	OU-3
Safety Meeting Topic:	Be aware of your surroundings
Date:	10/27/15 Tuesday

Activities/ Deliveries

Specific task working and or accomplished today:
AREA A: Finished taking down fence around the old weather station location. Dug PIV valve to extend the stem on the valve.

EQUIPMENT	HOURS	EQUIPMENT	HOURS
Rock Truck		Screen	
270 track hoe		Rock truck	
Water truck		Loader	
228 track hoe		31 dozer	

LABOR

NAME	OCCUPATION	START TIME:	STOP TIME:	HOURS
Tyler crew	Forman 5 guys	6:30	3:30	45
Jonathan Tenney	Labor	0:00	0:00	0
Matt	Foreman	0:00	0:00	0
Plastic Fushion	8 guys	0:00	0:00	0
			Total Crew Hours for Today:	45
			Total Crew Hours Cumulative:	2415

Details of Hauling/ Weight ticket # and tons

TRUCK	WEIGHT TICKET # / TONS	LOAD COUNT	ORIGIN	DESTINATION
TC truck				
TC truck				
TC truck				
Jerry truck				
Jerry truck				
Jerry truck				
Jerry truck				
Jerry truck				

Weather Report

Solutia OU-3 Remediation Action

Construction Daily Work Report

Day # 95

Project Number/Name:	OU-3
Safety Meeting Topic:	Ppe
Date:	10-28-15. Wednesday

Activities/ Deliveries 2 loads of geotextile fabric

Specific task working and or accomplished today:

AREA E: Brown's concrete started removing forms off the poured wall. AREA C&D: put down 18 loads of base,SILT FENCE installed 326' of fence around area C&D. Unloaded 1 load of geotextile fabric Tyler unloaded the other.Started on the new concrete washout area for Johnny

EQUIPMENT	HOURS	EQUIPMENT	HOURS
39 dozer	10		
John deer skid steer	10		
250 loader	1		

LABOR

NAME	OCCUPATION	START TIME:	STOP TIME:	HOURS
Randy crew	Foreman 5 guys	6:30	5:00	52.5
Jason	Safety	6:30	5:00	10.5
Brown's concrete	3 guys	7:30	3:30	24
			Total Crew Hours for Today:	87
			Total Crew Hours Cumulative:	8,577.50

Details of Hauling/ Weight ticket # and tons

TRUCK	WEIGHT TICKET # / TONS	LOAD COUNT	ORIGIN	DESTINATION
Taylor dump truck	Jimmy	6	Vulcan	Area C&D
Taylor dump truck	Tony	2	Vulcan	Area C&D
Taylor dump truck	Kelly	9	Vulcan	Area C&D
Teague hauling		1	Vulcan	Area C&D

Weather Report

Chance of showers. High 72. Low 57

Randy Goodwin

Solutia OU-3 Remediation Action

Construction Daily Work Report

Day # _____

Project Number/Name:	OU-3
Safety Meeting Topic:	Be aware of your surroundings
Date:	10/28/15 Wednesday

Activities/ Deliveries

Specific task working and or accomplished today:
AREA A: Extended the hydrant in area A and dug up the hydrant that had been knocked over and exposed the location where the cap will be installed. Herbicided in area A.

EQUIPMENT	HOURS	EQUIPMENT	HOURS
Rock Truck		Screen	
270 track hoe		Rock truck	
Water truck		Loader	
228 track hoe		31 dozer	

LABOR

NAME	OCCUPATION	START TIME:	STOP TIME:	HOURS
Tyler crew	Forman 6 guys	6:30	5:30	66
Matt	Foreman	0:00	0:00	0
Plastic Fushion	8 guys	6:30	9:00	20
			Total Crew Hours for Today:	86
			Total Crew Hours Cumulative:	2501

Details of Hauling/ Weight ticket # and tons

TRUCK	WEIGHT TICKET # / TONS	LOAD COUNT	ORIGIN	DESTINATION
TC truck				
TC truck				
TC truck				
Jerry truck				
Jerry truck				
Jerry truck				
Jerry truck				
Jerry truck				

Weather Report

Solutia OU-3 Remediation Action

Construction Daily Work Report

Day # 96

Project Number/Name:	OU-3
Safety Meeting Topic:	Working in hot zones
Date:	10-28-15. Thursday

Activities/ Deliveries 65 loads of base

Specific task working and or accomplished today:

AREA C&D: put down 64 loads of base 1 load went to area a. AREA E: Brown's concrete took down more forms off poured wall. AREA A:Brown's concrete poured 3 squares and tied rebar in 3 20' squares south east side and south east headed north.Taylor graded 71' long x 9' wide beside parking lot on east side heading west. OUT OF SCOPE WORK:finished up new concrete wash out area 7 waddles,107' of silt fence,5,775 sq feet of 6 oz fabric.Started hammering out high spots in concrete in

Wash out area 4 hrs hammering With mini hammer hoe

EQUIPMENT	HOURS	EQUIPMENT	HOURS
39 dozer	6		
John deer skid steer	10.5		
Mini hoe with hammer	4		
31 dozer	4.5		

LABOR

NAME	OCCUPATION	START TIME:	STOP TIME:	HOURS
Randy crew	Foreman 5 guys	6:30	5:00	52.5
Jason	Safety	6:30	5:00	10.5
Brown's concrete	8 guys	7:30	5:00	76
			Total Crew Hours for Today:	138.5
			Total Crew Hours Cumulative:	8,716

Details of Hauling/ Weight ticket # and tons

TRUCK	WEIGHT TICKET # / TONS	LOAD COUNT	ORIGIN	DESTINATION
Taylor dump truck	2 trucks	14 loads	Vulcan	Area C&D
Jerrys trucking	4 trucks	29 loads	Vulcan	Area C&D
Teague hauling	3 trucks	15 loads	Vulcan	Area C&D
Rsms trucking	1 truck	6 loads	Vulcan	Area C&D
Teague hauling	1 truck	1	Vulcan	Area a

Weather Report

Chance of showers. High 73. Low 43

Randy Hoskins

Solutia OU-3 Remediation Action

Construction Daily Work Report

Day # _____

Project Number/Name:	OU-3
Safety Meeting Topic:	Be aware of your surroundings
Date:	10/29/15 Thursday

Activities/ Deliveries

Specific task working and or accomplished today:
AREA A: put cap on pipe after taking the hydrant out. Poured kicker behind the cap. Put up caution fence around the hole of the first PIV.

EQUIPMENT	HOURS	EQUIPMENT	HOURS
Rock Truck		Screen	
270 track hoe		Rock truck	
Water truck		Loader	
228 track hoe		31 dozer	

LABOR

NAME	OCCUPATION	START TIME:	STOP TIME:	HOURS
Tyler crew	Forman 6 guys	6:30	11:00	27
Matt	Foreman	6:30	4:30	10
Plastic Fushion	8 guys	6:30	4:30	80
			Total Crew Hours for Today:	117
			Total Crew Hours Cumulative:	2618

Details of Hauling/ Weight ticket # and tons

TRUCK	WEIGHT TICKET # / TONS	LOAD COUNT	ORIGIN	DESTINATION
TC truck				
TC truck				
TC truck				
Jerry truck				
Jerry truck				
Jerry truck				
Jerry truck				
Jerry truck				

Weather Report

Solutia OU-3 Remediation Action

Construction Daily Work Report

Day # 97

Project Number/Name:	OU-3
Safety Meeting Topic:	Next couple of days watch out for kids on Halloween
Date:	10-30-15. Friday

Activities/ Deliveries

29 loads of base

Specific task working and or accomplished today:

AREA A: finished grading south east of area a beside parking lot for the 6" cap 50' and started on the north side got dug out where it was high and graded 61'.Browns concrete tied rebar in 2 squares and poured 4 20' squares south east side beside parking lot.Sinerton fence and Taylor removed fence posts on east side to moved back 4'. AREA E:Brown's concrete finished taking forms off the poured wall. AREA C&D:put down 29 loads of base.

EQUIPMENT	HOURS	EQUIPMENT	HOURS
31 dozer	10.5		
John deer skid steer	10.5		
78 mini hoe	2		
Mini hoe with hammer	4		

LABOR

NAME	OCCUPATION	START TIME:	STOP TIME:	HOURS
Randy crew	Foreman 5 guys	6:30	5:00	52.5
Jason	Safety	6:30	5:00	10.5
Brown's concrete	8 guys	7:30	4:00	68
Siberton fence	3 guys	12:30	1:30	3
			Total Crew Hours for Today:	134
			Total Crew Hours Cumulative:	8,850

Details of Hauling/ Weight ticket # and tons

TRUCK	WEIGHT TICKET # / TONS	LOAD COUNT	ORIGIN	DESTINATION
Jerrys trucking	3 trucks	16 loads	Vulcan	Area C&D
Teague hauling	1 truck	9 loads	Vulcan	Area C&D
Taylor dump trucks	2 trucks	3 loads	Vulcan	Area C&D
Taylor dump truck	1 truck	1 load	Vulcan	Area a

Weather Report

Sunny. High 70. Low 48

Randy Hoskins

Solutia OU-3 Remediation Action

Construction Daily Work Report

Day # _____

Project Number/Name:	OU-3
Safety Meeting Topic:	Be aware of your surroundings
Date:	10/30/15 Friday

Activities/ Deliveries

Specific task working and or accomplished today:
BORROW PIT: started back screening material and stock piling. PCB CELL: PFF is sewing the fabric.

EQUIPMENT	HOURS	EQUIPMENT	HOURS
Rock Truck	10	Screen	10
270 track hoe	10	Rock truck	
Water truck		Loader	10
228 track hoe	10	D61 dozed	10

LABOR

NAME	OCCUPATION	START TIME:	STOP TIME:	HOURS
Tyler crew	Forman 6 guys	6:30	5:00	63
Matt Owen	Forman	6:30	5:00	10.5
Plastic Fusion	8 guys	6:30	4:30	80
			Total Crew Hours for Today:	153.5
			Total Crew Hours Cumulative:	2771.5

Details of Hauling/ Weight ticket # and tons

TRUCK	WEIGHT TICKET # / TONS	LOAD COUNT	ORIGIN	DESTINATION
TC truck				
TC truck				
TC truck				
Jerry truck				
Jerry truck				
Jerry truck				
Jerry truck				
Jerry truck				

Weather Report

Solutia OU-3 Remediation Action

Construction Daily Work Report

Day # _____

Project Number/Name:	OU-3
Safety Meeting Topic:	Be aware of your surroundings
Date:	10/31/15 Saturday

Activities/ Deliveries

Specific task working and or accomplished today:
BORROW PIT: Screened and stockpiled dirt. PCB CELL: PFF is sewing the fabric.

EQUIPMENT	HOURS	EQUIPMENT	HOURS
Rock Truck	8	Screen	8
270 track hoe	8	Rock truck	
Water truck		Loader	8
228 track hoe	8	D61 dozed	8

LABOR

NAME	OCCUPATION	START TIME:	STOP TIME:	HOURS
Tyler crew	Forman 6 guys	6:30	2:30	64
Matt Owen	Forman	6:30	2:30	8
Jason Joiner	Safety man	6:30	2:30	8
Plastic Fusion	8 guys	6:30	4:00	76
			Total Crew Hours for Today:	156
			Total Crew Hours Cumulative:	2927.5

Details of Hauling/ Weight ticket # and tons

TRUCK	WEIGHT TICKET # / TONS	LOAD COUNT	ORIGIN	DESTINATION
TC truck				
TC truck				
TC truck				
Jerry truck				
Jerry truck				
Jerry truck				
Jerry truck				
Jerry truck				

Weather Report

Solutia OU-3 Remediation Action

Construction Daily Work Report

Day # _____

Project Number/Name:	OU-3
Safety Meeting Topic:	Be aware of your surroundings
Date:	11/1/15 Sunday

Activities/ Deliveries

Specific task working and or accomplished today:
BORROW PIT: done maintenance on the screen.

EQUIPMENT	HOURS	EQUIPMENT	HOURS
Rock Truck		Screen	
270 track hoe		Rock truck	
Water truck		Loader	
228 track hoe		D61 dozed	

LABOR

NAME	OCCUPATION	START TIME:	STOP TIME:	HOURS
Tyler crew	Forman 6 guys	6:30	11:00	27
Matt Owen	Forman			
Jason Joiner	Safety man			
Plastic Fusion	8 guys			
			Total Crew Hours for Today:	27
			Total Crew Hours Cumulative:	2954.5

Details of Hauling/ Weight ticket # and tons

TRUCK	WEIGHT TICKET # / TONS	LOAD COUNT	ORIGIN	DESTINATION
TC truck				
TC truck				
TC truck				
Jerry truck				
Jerry truck				
Jerry truck				
Jerry truck				
Jerry truck				

Weather Report

Solutia OU-3 Remediation Action

Construction Daily Work Report

Day # 98

Project Number/Name:	OU-3
Safety Meeting Topic:	Wet conditions,slips and falls
Date:	11-2-15. Monday

Activities/ Deliveries Truck load of geocells

Specific task working and or accomplished today:

AREA E:looked for electric lines that run to the 2 light poles. AREA C&D: put in 28 loads of base and 6 loads of class 1 rip rap in swampy area on east side of C&D down in the bottom.Started blending stone together and rolling in.Unloaded truck load of geocells.Removed 24" pipe running under driveway

EQUIPMENT	HOURS	EQUIPMENT	HOURS
31 dozer	10	78 mini hoe	4
Motor grader	7	John deer skid steer	8
61 dozer	7		
Smooth roller	7		

LABOR

NAME	OCCUPATION	START TIME:	STOP TIME:	HOURS
Randy crew	Foreman 4 guys	6:30	4:30	40
Jason	Safety	6:30	4:30	10
Brown's concrete		0:00		
Chris		11:00 a.m	4:30	5.5
Larry	Operator	9:30 a.m	4:30	7
Jeremy	Operator	9:30 a.m	4:30	7
Chuck	Operator	9:30 a.m	4:30	7
			Total Crew Hours for Today:	76.5
			Total Crew Hours Cumulative:	8,926.50

Details of Hauling/ Weight ticket # and tons

TRUCK	WEIGHT TICKET # / TONS	LOAD COUNT	ORIGIN	DESTINATION
Taylor dump truck	3 trucks	15 loads	Vulcan	Area C&D
Taylor dump trucks	3 trucks	6 loads of class 1 riprap	McCartney	Area C&D
Jerry hauling	2 trucks	13 loads	Vulcan	Area C&D

Weather Report

Rain showers. High 71. Low 59

Solutia OU-3 Remediation Action

Construction Daily Work Report

Day # _____

Project Number/Name:	OU-3
Safety Meeting Topic:	Be aware of your surroundings
Date:	11/2/15 Monday

Activities/ Deliveries

Specific task working and or accomplished today:
BORROW PIT: done maintenance on the screen. Started clearing for the fence down the property line. To wet to screen dirt.

EQUIPMENT	HOURS	EQUIPMENT	HOURS
Rock Truck		Screen	
270 track hoe		Rock truck	
200 track hoe	8	Loader	
228 track hoe		D61 dozed	8

LABOR

NAME	OCCUPATION	START TIME:	STOP TIME:	HOURS
Tyler crew	Forman 6 guys	6:30	4:30	60
Matt Owen	Forman			
Plastic Fusion	8 guys	6:30	4:30	80
			Total Crew Hours for Today:	140
			Total Crew Hours Cumulative:	3094.5

Details of Hauling/ Weight ticket # and tons

TRUCK	WEIGHT TICKET # / TONS	LOAD COUNT	ORIGIN	DESTINATION
TC truck				
TC truck				
TC truck				
Jerry truck				
Jerry truck				
Jerry truck				
Jerry truck				
Jerry truck				

Weather Report

Solutia OU-3 Remediation Action

Construction Daily Work Report

Day # 99

Project Number/Name:	OU-3
Safety Meeting Topic:	Ppe
Date:	11-3-15. Tuesday

Activities/ Deliveries

Specific task working and or accomplished today:

AREA A:Brown's concrete started forming and putting in rebar on the east side along side the parking lot.Taylor dug around and looked for power that ran to the 2 light pole. AREA E:model city brought a crane in and we got the big safety sign moved.browns concrete started forming up and putting in rebar to raise vault up in area a. AREA C&D:Finished blending and rolling in area,started putting in 6" cap layer was stopped until we got area surveyed,put in around 25 loads before being stopped,then stocked piled 23 loads saw cut down the 2 trees in the swamp area

Saw cut down 2 trees southeast side In swamp area

EQUIPMENT	HOURS	EQUIPMENT	HOURS
61 dozer	10		
Motor grader	9		
31 dozer	10		
Smooth roller	10		

LABOR

NAME	OCCUPATION	START TIME:	STOP TIME:	HOURS
Randy crew	Foreman 5 guys	6:30	4:30	50
Jason	Safety	6:30	4:30	10
Brown's concrete	7 guys	7:30	4:00	59.5
Larry	Operator	6:30	4:00	9.5
Chuck	Operator	6:30	4:30	10
			Total Crew Hours for Today:	139
			Total Crew Hours Cumulative:	9,065.50

Details of Hauling/ Weight ticket # and tons

TRUCK	WEIGHT TICKET # / TONS	LOAD COUNT	ORIGIN	DESTINATION
Taylor dump truck	3 trucks	18 loads	Vulcan	Area C&D
Jerrys trucking	5 trucks	20 loads	Vulcan	Area C&D
Rsms hauling	1 truck	6 loads	Vulcan	Area C&D
Teague hauling	2 trucks	4 loads	Vulcan	Area C&D

Weather Report

Cloudy,drizzle. High 76 Low 61

Solutia OU-3 Remediation Action

Construction Daily Work Report

Day # _____

Project Number/Name:	OU-3
Safety Meeting Topic:	Be aware of your surroundings
Date:	11/3/15 Tuesday

Activities/ Deliveries

Specific task working and or accomplished today:
AREA A: dug two PIV valves and replaced the stems back filled and got one of the two PIVs set back on its stem.

EQUIPMENT	HOURS	EQUIPMENT	HOURS
Rock Truck		Screen	
270 track hoe		Rock truck	
Water truck		Loader	
228 track hoe		D61 dozed	

LABOR

NAME	OCCUPATION	START TIME:	STOP TIME:	HOURS
Tyler crew	Forman 6 guys	6:30	4:30	60
Matt Owen	Forman	6:30	4:30	10
Plastic Fusion	8 guys	6:30	4:30	80
			Total Crew Hours for Today:	150
			Total Crew Hours Cumulative:	3244.5

Details of Hauling/ Weight ticket # and tons

TRUCK	WEIGHT TICKET # / TONS	LOAD COUNT	ORIGIN	DESTINATION
TC truck				
TC truck				
TC truck				
Jerry truck				
Jerry truck				
Jerry truck				
Jerry truck				
Jerry truck				

Weather Report

Solutia OU-3 Remediation Action

Construction Daily Work Report

Day # 100

Project Number/Name:	OU-3
Safety Meeting Topic:	Permits,right ppe in the right areas
Date:	11-4-15. Wednesday

Activities/ Deliveries

Specific task working and or accomplished today:

AREA A:Brown's concrete got 3 20' squares poured 2 on the east run beside parking lot and 1 on th south h east corner and tied rebar in 3 more squares. AREA E:Brown's concrete the valve vault raised up and where the big safety sign raised up with concrete.Lilton electric looked at light pole and sign of rewireing. AREA C&D:lance survey got area shot and we started putting in 6"cap with base 75 loads and rolled in,got the safety sign wrapped with plastic.

EQUIPMENT	HOURS	EQUIPMENT	HOURS
31 dozer	6		
61 dozer	10.5		
Motor grader	10.5		
Smooth roller	8		

LABOR

NAME	OCCUPATION	START TIME:	STOP TIME:	HOURS
Randy crew	Foreman 5 guys	6:30	5:00	52.5
Jason	Safety	6:30	5:00	10.5
Brown's concrete	7 guys	7:30	4:00	59.5
Larry	Operator	6:30	5:00	10.5
Chuck	Operator	6:30	5:00	10.5
Lance survey	3 guys	9:30	2:00	13.5
Lilton electric		6:30	8:00	1.5
			Total Crew Hours for Today:	158.5
			Total Crew Hours Cumulative:	9,224.00

Details of Hauling/ Weight ticket # and tons

TRUCK	WEIGHT TICKET # / TONS	LOAD COUNT	ORIGIN	DESTINATION
Taylor dump trucks	3 trucks	19 loads	Vulcan	Area C&D
Jerrys trucking	5 trucks	37 loads	Vulcan	Area C&D
Rsms hauling	1 truck	9 loads	Vulcan	Area C&D
Teague hauling	1 truck	10 loads	Vulcan	Area. C&D

Weather Report

Cloudy. High 76. Low 64

Solutia OU-3 Remediation Action

Construction Daily Work Report

Day # _____

Project Number/Name:	OU-3
Safety Meeting Topic:	Be aware of your surroundings
Date:	11/4/15 Wednesday

Activities/ Deliveries

Specific task working and or accomplished today:
AREA A: Finished raising the PIV valves. Had to put excavated dirt into container and back fill the holes with stone.

EQUIPMENT	HOURS	EQUIPMENT	HOURS
Rock Truck		Screen	
270 track hoe		Rock truck	
78 track hoe	10	Loader	
228 track hoe		D61 dozed	

LABOR

NAME	OCCUPATION	START TIME:	STOP TIME:	HOURS
Tyler crew	Forman 6 guys	6:30	5:00	63
Matt Owen	Forman	6:30	4:30	10
			Total Crew Hours for Today:	73
			Total Crew Hours Cumulative:	3317.5

Details of Hauling/ Weight ticket # and tons

TRUCK	WEIGHT TICKET # / TONS	LOAD COUNT	ORIGIN	DESTINATION
TC truck	DGA	2	Vulcan	AREA A
TC truck	57 stone	2	Vulcan	AREA A
TC truck				
Jerry truck				
Jerry truck				
Jerry truck				
Jerry truck				
Jerry truck				

Weather Report

Solutia OU-3 Remediation Action

Construction Daily Work Report

Day # 101

Project Number/Name:	OU-3
Safety Meeting Topic:	Smoke area
Date:	11-5-15. Thursday

Activities/ Deliveries

Specific task working and or accomplished today:

AREA A:graded 127' x 9' wide for the 6" cap on the north side, removed 79' of 12" drain line and backfilled it with base on the north side.browns concrete poured 4 20' squares on the east side beside parking lot and formed up and tied rebar in 4 more,they poured 1 section beside pump station in the corner. AREA C&D:put in 66 loads of base and started on the bridging area where is was soft with some different fabric.Used 7,661 sq feet of the special fabric.

EQUIPMENT	HOURS	EQUIPMENT	HOURS
61 dozer	10	John deer skid steer	10
31 dozer	5	78 mini hoe	10
Motor grader	10		
Smooth roller	10		

LABOR

NAME	OCCUPATION	START TIME:	STOP TIME:	HOURS
Randy crew	Foreman 4 guys	6:30	4:30	40
Jason	Safety	6:30	2:30	8
Brown's concrete	4 guys	7:30	4:30	36
Larry	Operator	6:30	4:30	10
Chuck	Operator	6:30	4:30	10
Frank		6:30	2:00	7.5
			Total Crew Hours for Today:	111.5
			Total Crew Hours Cumulative:	9,336

Details of Hauling/ Weight ticket # and tons

TRUCK	WEIGHT TICKET # / TONS	LOAD COUNT	ORIGIN	DESTINATION
Taylor dump trucks	3 trucks	21 loads	Vulcan	Area C&D
Jerry trucking	4 trucks	28 loads	Vulcan	Area C&D
Teague hauling	1 truck	10 loads	Vulcan	Area C&D
Quincey Boyd	1 truck	7 loads	Vulcan	Area C&D

Weather Report

Cloudy. High 78. Low 66

Randy Gordon

Solutia OU-3 Remediation Action

Construction Daily Work Report

Day # _____

Project Number/Name:	OU-3
Safety Meeting Topic:	Be aware of your surroundings
Date:	11/5/15 Thursday

Activities/ Deliveries

Specific task working and or accomplished today:

BORROW PIT: screened and stock piled material. PCB CELL: laid out the haul road with paint and cones. AREA A: finished getting the excavated material into the container.

EQUIPMENT	HOURS	EQUIPMENT	HOURS
Rock Truck	10	Screen	10
270 track hoe	10	Rock truck	
78 track hoe	2	Loader	10
228 track hoe	10	D61 dozed	10

LABOR

NAME	OCCUPATION	START TIME:	STOP TIME:	HOURS
Tyler crew	Forman 6 guys	6:30	4:30	60
Matt Owen	Forman	6:30	4:30	10
			Total Crew Hours for Today:	70
			Total Crew Hours Cumulative:	3387.5

Details of Hauling/ Weight ticket # and tons

TRUCK	WEIGHT TICKET # / TONS	LOAD COUNT	ORIGIN	DESTINATION
TC truck				
TC truck				
TC truck				
Jerry truck				
Jerry truck				
Jerry truck				
Jerry truck				
Jerry truck				

Weather Report

Solutia OU-3 Remediation Action

Construction Daily Work Report

Day # 102

Project Number/Name:	OU-3
Safety Meeting Topic:	Weather
Date:	11-6-15. Friday

Activities/ Deliveries

Specific task working and or accomplished today:

AREA A:graded 136' x 9' wide for 6" cap and rolled in,capped off drain pipe in inlet box with water plug,and right outside asphalt road,filled up hole with base and rolled in.Browns concrete formed up and tied rebar around pump station and along side parking lot for the 6" cap. AREA C&D:put down 87 loads of base and rolled in.

EQUIPMENT	HOURS	EQUIPMENT	HOURS
Motor grader	10	78 mini hoe	3
31 dozer	5	John deer skid steer	10
61 dozer	10		
Smooth roller	10		

LABOR

NAME	OCCUPATION	START TIME:	STOP TIME:	HOURS
Randy crew	Foreman/safety 5 guys	6:30	4:30	50
Jason	Safety	0:00		
Brown's concrete	4 guys	7:30	4:00	34
Larry	Operator	6:30	4:30	10
Chuck	Operator	6:30	4:30	10
			Total Crew Hours for Today:	104
			Total Crew Hours Cumulative:	9,440

Details of Hauling/ Weight ticket # and tons

TRUCK	WEIGHT TICKET # / TONS	LOAD COUNT	ORIGIN	DESTINATION
Taylor dump trucks	3 trucks	23 loads	Vulcan	Area C&D
Jerry hauling	5 trucks	35 loads	Vulcan	Area C&D
Rsms trucking	1 truck	9 loads	Vulcan	Area C&D
Teague hauling	2 trucks	14 loads	Vulcan	Area C&D
Quincey Boyd	1 truck	6 loads	Vulcan	Area C&D

Weather Report

Chance of rain. High 70. Low 65

Solutia OU-3 Remediation Action

Construction Daily Work Report

Day # _____

Project Number/Name:	OU-3
Safety Meeting Topic:	Be aware of your surroundings
Date:	11/6/15 Frday

Activities/ Deliveries

Specific task working and or accomplished today:
BORROW PIT: screened and stock piled material.

EQUIPMENT	HOURS	EQUIPMENT	HOURS
Rock Truck	10	Screen	10
270 track hoe	10	Rock truck	
78 track hoe		Loader	10
228 track hoe	10	D61 dozed	10

LABOR

NAME	OCCUPATION	START TIME:	STOP TIME:	HOURS
Tyler crew	Forman 6 guys	6:30	4:30	60
Matt Owen	Forman	6:30	4:30	10
			Total Crew Hours for Today:	70
			Total Crew Hours Cumulative:	3457.5

Details of Hauling/ Weight ticket # and tons

TRUCK	WEIGHT TICKET # / TONS	LOAD COUNT	ORIGIN	DESTINATION
TC truck				
TC truck				
TC truck				
Jerry truck				
Jerry truck				
Jerry truck				
Jerry truck				
Jerry truck				

Weather Report

Solutia OU-3 Remediation Action

Construction Daily Work Report

Day # _____

Project Number/Name:	OU-3
Safety Meeting Topic:	Be aware of your surroundings
Date:	11/9/15 Monday

Activities/ Deliveries

Specific task working and or accomplished today:
Rained out

EQUIPMENT	HOURS	EQUIPMENT	HOURS
Rock Truck		Screen	
270 track hoe		Rock truck	
78 track hoe		Loader	
228 track hoe		D61 dozed	

LABOR

NAME	OCCUPATION	START TIME:	STOP TIME:	HOURS
Tyler crew	Forman 5 guys	6:30	8:30	10
Matt Owen	Forman	6:30	8:30	2
Jonathan Tenney	Labor	0:00	0:00	
			Total Crew Hours for Today:	12
			Total Crew Hours Cumulative:	3471.5

Details of Hauling/ Weight ticket # and tons

TRUCK	WEIGHT TICKET # / TONS	LOAD COUNT	ORIGIN	DESTINATION
TC truck				
TC truck				
TC truck				
Jerry truck				
Jerry truck				
Jerry truck				
Jerry truck				
Jerry truck				

Weather Report

Solutia OU-3 Remediation Action

Construction Daily Work Report

Day # 104

Project Number/Name:	OU-3
Safety Meeting Topic:	B&p issues
Date:	11-10-15. Tuesday

Activities/ Deliveries

Specific task working and or accomplished today:

AREA A:Brown's concrete poured 4 20' squares on the south east side beside the parking lot and started forming and tieing rebar on the north side. AREA C&D:fixed the area that got washed out,filled in areas that were little low,and clipped down some that was little high put in 13 loads and stocked piled 1 of base,and started putting in geocells put in 6,446 sq feet and backfilled small area of it.

EQUIPMENT	HOURS	EQUIPMENT	HOURS
Motor grader	9.5		
61 dozer	10		
John deer skid steer	10		

LABOR

NAME	OCCUPATION	START TIME:	STOP TIME:	HOURS
Randy crew	Foreman 5 guys	6:30	4:30	50
Jason	Safety	6:30	4:30	10
Larry	Operator	6:30	4:00	9.5
Chuck	Operator	6:30	4:30	10
Brown's concrete	7 guys	7:30	4:30	63
			Total Crew Hours for Today:	142.5
			Total Crew Hours Cumulative:	9,608.50

Details of Hauling/ Weight ticket # and tons

TRUCK	WEIGHT TICKET # / TONS	LOAD COUNT	ORIGIN	DESTINATION
Taylor dump trucks	3 trucks	14 loads	Vulcan	Area C&D

Weather Report

Cloudy. High 68. Low 44

Solutia OU-3 Remediation Action

Construction Daily Work Report

Day # _____

Project Number/Name:	OU-3
Safety Meeting Topic:	Be aware of your surroundings
Date:	11/10/15 Tuesday

Activities/ Deliveries

Specific task working and or accomplished today:
AREA C&D: Cut rebar for the geocell. Started laying the geocell out. BORROW PIT: Bladed up to dry.

EQUIPMENT	HOURS	EQUIPMENT	HOURS
Rock Truck		Screen	
270 track hoe		Rock truck	
78 track hoe		Loader	
228 track hoe		D61 dozed	

LABOR

NAME	OCCUPATION	START TIME:	STOP TIME:	HOURS
Tyler crew	Forman 6 guys	6:30	4:30	60
Matt Owen	Forman	6:30	4:30	10
			Total Crew Hours for Today:	70
			Total Crew Hours Cumulative:	3539.5

Details of Hauling/ Weight ticket # and tons

TRUCK	WEIGHT TICKET # / TONS	LOAD COUNT	ORIGIN	DESTINATION
TC truck				
TC truck				
TC truck				
Jerry truck				
Jerry truck				
Jerry truck				
Jerry truck				
Jerry truck				

Weather Report

Solutia OU-3 Remediation Action

Construction Daily Work Report

Day # 105

Project Number/Name:	OU-3
Safety Meeting Topic:	Foggy,slips & falls
Date:	11-11-15. Wednesday

Activities/ Deliveries

Specific task working and or accomplished today:

AREA A:Brown's concrete poured last 2 sections beside parking lot on south east side,then thy formed and tied rebar on the north side and poured 5 squares on the north side. AREA C&D:Put in 13,464 sq feet of geocells and continued backfilling those,stocked piled 9 loads to put inside the geocells,put 2 loads on top of the cell to backfill with, and used 7 loads on building the new road going into area C&D,cleaned out in front storm in where base washed down.

EQUIPMENT	HOURS	EQUIPMENT	HOURS
61 dozer	10		
John deer skid steer	10		
78 mini hoe	2		
Smooth roller	9		

LABOR

NAME	OCCUPATION	START TIME:	STOP TIME:	HOURS
Randy crew	Foreman 5 guys	6:30	4:30	50
Jason	Safety	6:30	4:30	10
Brown's concrete	7 guys	7:30	4:30	63
Chuck	Operator	6:30	4:30	10
			Total Crew Hours for Today:	133
			Total Crew Hours Cumulative:	9,741.50

Details of Hauling/ Weight ticket # and tons

TRUCK	WEIGHT TICKET # / TONS	LOAD COUNT	ORIGIN	DESTINATION
Taylor dump trucks	3 trucks	18 loads	Vulcan	Area C&D

Weather Report

Clear. High 74. Low 57

Solutia OU-3 Remediation Action

Construction Daily Work Report

Day # _____

Project Number/Name:	OU-3
Safety Meeting Topic:	Be aware of your surroundings
Date:	11/11/15 Wednesday

Activities/ Deliveries

Specific task working and or accomplished today:
BORROW PIT: to wet to haul dirt to PCB cell. Worked stock pile to dry. AREA C&D: put down more geocell.

EQUIPMENT	HOURS	EQUIPMENT	HOURS
Rock Truck		Screen	
270 track hoe	8	Rock truck	
78 track hoe		Loader	
228 track hoe		D61 dozed	

LABOR

NAME	OCCUPATION	START TIME:	STOP TIME:	HOURS
Tyler crew	Forman 6 guys	6:30	5:00	63
Matt Owen	Forman	6:30	5:00	10.5
			Total Crew Hours for Today:	73.5
			Total Crew Hours Cumulative:	3613

Details of Hauling/ Weight ticket # and tons

TRUCK	WEIGHT TICKET # / TONS	LOAD COUNT	ORIGIN	DESTINATION
TC truck				
TC truck				
TC truck				
Jerry truck				
Jerry truck				
Jerry truck				
Jerry truck				
Jerry truck				

Weather Report

Solutia OU-3 Remediation Action

Construction Daily Work Report

Day # 106

Project Number/Name:	OU-3
Safety Meeting Topic:	Trips and falls on the geocells
Date:	11-12-15. Thursday

Activities/ Deliveries

Specific task working and or accomplished today:

AREA A:Brown's concrete poured 6 squares north side of area a and formed up and tied in 2 other squares. AREA C&D:put down 13,464 sq feet of geocells and backfilled geocells with base,finished up new road going into the area.Tyler put in a riprap check dam down by the culvert on the north side of C&D.put in 15 loads of base

EQUIPMENT	HOURS	EQUIPMENT	HOURS
31 dozer	10		
John deer skid steer	10		
Smooth roller	4		

LABOR

NAME	OCCUPATION	START TIME:	STOP TIME:	HOURS
Randy crew	Foreman 5 guys	6:30	4:30	50
Jason	Safety	6:30	4:30	10
Brown's concrete	7 guys	7:30	4:30	63
Chuck	Operator	6:30	4:30	10
			Total Crew Hours for Today:	133
			Total Crew Hours Cumulative:	9,874.50

Details of Hauling/ Weight ticket # and tons

TRUCK	WEIGHT TICKET # / TONS	LOAD COUNT	ORIGIN	DESTINATION
Taylor dump truck	3 dump trucks	15 loads	Vulcan	Area C&D
Taylor dump truck	1 truck	1 load	McCartney	Area C&D rip rap

Weather Report

Chance of rain. High 67. Low 42

Randy Goodwin

Solutia OU-3 Remediation Action

Construction Daily Work Report

Day # _____

Project Number/Name:	OU-3
Safety Meeting Topic:	Be aware of your surroundings
Date:	11/12/15 Thursday

Activities/ Deliveries

Specific task working and or accomplished today:
BORROW PIT: to wet to haul dirt to PCB cell. Worked stock pile to dry. AREA C&D: put down more geocell.

EQUIPMENT	HOURS	EQUIPMENT	HOURS
Rock Truck		Screen	
270 track hoe	8	Rock truck	
78 track hoe		Loader	
228 track hoe		D61 dozed	

LABOR

NAME	OCCUPATION	START TIME:	STOP TIME:	HOURS
Tyler crew	Forman 6 guys	6:30	4:30	60
Matt Owen	Forman	6:30	4:30	10
			Total Crew Hours for Today:	70
			Total Crew Hours Cumulative:	3683

Details of Hauling/ Weight ticket # and tons

TRUCK	WEIGHT TICKET # / TONS	LOAD COUNT	ORIGIN	DESTINATION
TC truck				
TC truck				
TC truck				
Jerry truck				
Jerry truck				
Jerry truck				
Jerry truck				
Jerry truck				

Weather Report

Solutia OU-3 Remediation Action

Construction Daily Work Report

Day # 107

Project Number/Name:	OU-3
Safety Meeting Topic:	Trip hazard on geocells
Date:	11-13-15. Friday

Activities/ Deliveries

Specific task working and or accomplished today:

AREA C&D:put down 8,976 sq feet of geocells and backfilled them with 11 loads of base. AREA A:Brown's concrete poured 5 squares to finish up the north side and started taking down forms and cleaning up.Siberton fence put up 2 gate post and 3 other posts on the north side.

EQUIPMENT	HOURS	EQUIPMENT	HOURS
31 dozer	10		
John deer skid steer	10		
Smooth roller	4		
78 mini hoe	5		

LABOR

NAME	OCCUPATION	START TIME:	STOP TIME:	HOURS
Randy crew	Foreman 5 guys	6:30	4:30	50
Jason	Safety	6:30	4:00	9.5
Brown's concrete	5 guys	7:30	3:30	40
Chuck	Operator	6:30	4:30	10
Siberton fence	3 guys	10:00 a.m	11:30	4.5
			Total Crew Hours for Today:	114
			Total Crew Hours Cumulative:	9,988.50

Details of Hauling/ Weight ticket # and tons

TRUCK	WEIGHT TICKET # / TONS	LOAD COUNT	ORIGIN	DESTINATION
Taylor dump truck	2 trucks	11 loads	Vulcan	Area C&D

Weather Report

Sunny. High 62. Low 35

Solutia OU-3 Remediation Action

Construction Daily Work Report

Day # _____

Project Number/Name:	OU-3
Safety Meeting Topic:	Be aware of your surroundings
Date:	11/13/15 Friday

Activities/ Deliveries

Specific task working and or accomplished today:
Load count: 36. BORROW PIT / PCB CELL: Hauled dirt off the screen to the PCB cell to start the 3' haul road.

EQUIPMENT	HOURS	EQUIPMENT	HOURS
Rock Truck	10	Screen	10
270 track hoe	10	Rock truck	10
78 track hoe		Loader	10
228 track hoe		D61 dozed	10

LABOR

NAME	OCCUPATION	START TIME:	STOP TIME:	HOURS
Tyler crew	Forman 5 guys	6:30	4:30	50
Matt Owen	Forman	6:30	4:30	10
Jonathan Tenney	Labor	0:00	0:00	
			Total Crew Hours for Today:	60
			Total Crew Hours Cumulative:	3743

Details of Hauling/ Weight ticket # and tons

TRUCK	WEIGHT TICKET # / TONS	LOAD COUNT	ORIGIN	DESTINATION
Off road truck		18	Borrow pit	PCB cell
Off road truck.		18	Borrow pit	PCB cell
TC truck				
Jerry truck				
Jerry truck				
Jerry truck				
Jerry truck				
Jerry truck				

Weather Report

Solutia OU-3 Remediation Action

Construction Daily Work Report

Day # _____

Project Number/Name:	OU-3
Safety Meeting Topic:	Be aware of your surroundings
Date:	11/14/15 Saturday

Activities/ Deliveries

Specific task working and or accomplished today:
Load count: 22. BORROW PIT / PCB CELL: Hauled dirt off the screen to the PCB cell to start the 3' haul road.

EQUIPMENT	HOURS	EQUIPMENT	HOURS
Rock Truck	10	Screen	10
270 track hoe	10	Rock truck	10
78 track hoe		Loader	10
228 track hoe		D61 dozed	10

LABOR

NAME	OCCUPATION	START TIME:	STOP TIME:	HOURS
Tyler crew	Forman 6 guys	6:30	4:30	60
Gary Murphy	Operator	6:30	4:30	10
Jason	H&S	6:30	4:30	10
			Total Crew Hours for Today:	70
			Total Crew Hours Cumulative:	3812

Details of Hauling/ Weight ticket # and tons

TRUCK	WEIGHT TICKET # / TONS	LOAD COUNT	ORIGIN	DESTINATION
TC truck				
TC truck				
TC truck				
Jerry truck				
Jerry truck				
Jerry truck				
Jerry truck				
Jerry truck				

Weather Report

Solutia OU-3 Remediation Action

Construction Daily Work Report

Day # _____

Project Number/Name:	OU-3
Safety Meeting Topic:	Be aware of your surroundings
Date:	11/15/15 Sunday

Activities/ Deliveries

Specific task working and or accomplished today:
Load count: 22. BORROW PIT / PCB CELL: Hauled dirt out of the stock pile the start the 1' lift in the south west corner or the PCB cell.

EQUIPMENT	HOURS	EQUIPMENT	HOURS
Rock Truck	8	Screen	
270 track hoe	8	Rock truck	8
78 track hoe		Loader	
228 track hoe		D61 dozed	8

LABOR

NAME	OCCUPATION	START TIME:	STOP TIME:	HOURS
Tyler crew	Forman 6 guys	6:30	2:30	48
			Total Crew Hours for Today:	48
			Total Crew Hours Cumulative:	3860

Details of Hauling/ Weight ticket # and tons

TRUCK	WEIGHT TICKET # / TONS	LOAD COUNT	ORIGIN	DESTINATION
TC truck				
TC truck				
TC truck				
Jerry truck				
Jerry truck				
Jerry truck				
Jerry truck				
Jerry truck				

Weather Report

Solutia OU-3 Remediation Action

Construction Daily Work Report

Day # 108

Project Number/Name:	OU-3
Safety Meeting Topic:	Equipment sheets
Date:	11-16-15. Monday

Activities/ Deliveries

Specific task working and or accomplished today:

AREA A:Brown's concrete cleaned up and took down forms. AREA E:Brown's concrete started back forming on the wall west side heading south. AREA C&D:put down 8,976 sq feet of geocells and put down 16 loads of base filling up geocells.

EQUIPMENT	HOURS	EQUIPMENT	HOURS
31 dozer	10		
Smooth roller	2		
John deer skid steer	10		

LABOR

NAME	OCCUPATION	START TIME:	STOP TIME:	HOURS
Randy crew	Foreman 5 guys	6:30	4:30	50
Jason	Safety	6:30	3:30	9
Brown's concrete	4 guys	7:30	4:00	34
Chuck	Operator	6:30	4:30	10
			Total Crew Hours for Today:	103
			Total Crew Hours Cumulative:	10,091.50

Details of Hauling/ Weight ticket # and tons

TRUCK	WEIGHT TICKET # / TONS	LOAD COUNT	ORIGIN	DESTINATION
Taylor dump truck	1 truck	7 loads	Vulcan	Area C&D
Teague hauling	1 truck	9 loads	Vulcan	Area C&D

Weather Report

Partly cloudy. High 70. Low 54

Solutia OU-3 Remediation Action

Construction Daily Work Report

Day # _____

Project Number/Name:	OU-3
Safety Meeting Topic:	Be aware of your surroundings
Date:	11/16/15 Monday

Activities/ Deliveries

Specific task working and or accomplished today:

Load count: 26 BORROW PIT / PCB CELL: Hauled dirt out of the stock pile to continue the 1' lift in the south west corner of the PCB cell. Wrecked the Volvo truck due to brakes going out. Cleaned up the oil and diesel from the truck and put it in a container. Regarded the area and grassed and Hayes the area.

EQUIPMENT	HOURS	EQUIPMENT	HOURS
Rock Truck	4	Screen	
270 track hoe	4	Rock truck	4
78 track hoe		Loader	
228 track hoe		D61 dozed	4

LABOR

NAME	OCCUPATION	START TIME:	STOP TIME:	HOURS
Tyler crew	Forman 5 guys	6:30	5:00	52.5
Jessie Payne	Labor	6:30	10:30	4
			Total Crew Hours for Today:	56.6
			Total Crew Hours Cumulative:	3916.5

Details of Hauling/ Weight ticket # and tons

TRUCK	WEIGHT TICKET # / TONS	LOAD COUNT	ORIGIN	DESTINATION
TC truck				
TC truck				
TC truck				
Jerry truck				
Jerry truck				
Jerry truck				
Jerry truck				
Jerry truck				

Weather Report

Solutia OU-3 Remediation Action

Construction Daily Work Report

Day # 109

Project Number/Name:	OU-3
Safety Meeting Topic:	Equipment check list
Date:	11-16-15. Tuesday

Activities/ Deliveries

Specific task working and or accomplished today:

AREA E:Brown's concrete continued forming and tieing rebar for the wall on the west side heading south. AREA C&D:put down 8,976 sq feet of geocells,backfilled with base and rolled in,put in 1 load of class 1 rip rap for the berm on the west side,started where it washed out used 810 sq feet of 10 oz fabric.

EQUIPMENT	HOURS	EQUIPMENT	HOURS
31 dozer	10		
John deer skid steer	10		
Smooth roller	6		

LABOR

NAME	OCCUPATION	START TIME:	STOP TIME:	HOURS
Randy crew	Foreman 5 guys	6:30	4:30	50
Jason	Safety	6:30	4:30	10
Brown's concrete	3 guys	7:30	4:00	25.5
Chuck	Operator	6:30	4:30	10
			Total Crew Hours for Today:	95.5
			Total Crew Hours Cumulative:	10,187

Details of Hauling/ Weight ticket # and tons

TRUCK	WEIGHT TICKET # / TONS	LOAD COUNT	ORIGIN	DESTINATION
Taylor dump truck	1 truck	7 loads	Vulcan	Area C&D
Teague hauling	1 truck	10 loads	Vulcan	Area C&D
Taylor dump truck	1 truck	1 load rip rap	McCartney	Area C&D

Weather Report

Cloudy. High 70. Low 62

Randy Goodwin

Solutia OU-3 Remediation Action

Construction Daily Work Report

Day # _____

Project Number/Name:	OU-3
Safety Meeting Topic:	Be aware of your surroundings
Date:	11/17/15 Tuesday

Activities/ Deliveries

Specific task working and or accomplished today:
BORROW PIT: Cleaned up pit for the rain. Worked on getting the safety check list organized in in the equipment. AREA C&D: put down geocell.

EQUIPMENT	HOURS	EQUIPMENT	HOURS
Rock Truck		Screen	
270 track hoe	2	Rock truck	
78 track hoe		Loader	
228 track hoe		D61 dozed	2

LABOR

NAME	OCCUPATION	START TIME:	STOP TIME:	HOURS
Tyler crew	Forman 4 guys	6:30	5:00	42
Statlin Ponder	Labor	0:00	0:00	0
			Total Crew Hours for Today:	42
			Total Crew Hours Cumulative:	3958.5

Details of Hauling/ Weight ticket # and tons

TRUCK	WEIGHT TICKET # / TONS	LOAD COUNT	ORIGIN	DESTINATION
TC truck				
TC truck				
TC truck				
Jerry truck				
Jerry truck				
Jerry truck				
Jerry truck				
Jerry truck				

Weather Report

Solutia OU-3 Remediation Action

Construction Daily Work Report

Day # 110

Project Number/Name:	OU-3
Safety Meeting Topic:	Muscle strains on geocells
Date:	11-18-15. Wednesday

Activities/ Deliveries

Specific task working and or accomplished today:

AREA C&D: put down 4,488 sq feet of geocells,and backfilled geocells with 7 loads of base and rolled in,put riprap check dam in on the east side down by where it's holding water.

EQUIPMENT	HOURS	EQUIPMENT	HOURS
31 dozer	4		
John deer skid steer	4		
Smooth roller	1.5		

LABOR

NAME	OCCUPATION	START TIME:	STOP TIME:	HOURS
Randy crew	Foreman 5 guys	6:30	10:30a.m	20
Jason	Safety	6:30	12:00	5.5
Brown's concrete		0:00		
Chuck	Operator	6:30	10:30a.m	4
			Total Crew Hours for Today:	29.5
			Total Crew Hours Cumulative:	10,216.50

Details of Hauling/ Weight ticket # and tons

TRUCK	WEIGHT TICKET # / TONS	LOAD COUNT	ORIGIN	DESTINATION
Taylor dump truck	1 truck	3 loads	Vulcan	Area C&D
Teague hauling	2 trucks	4 loads	Vulcan	Area C&D

Weather Report

Thunderstorms. High 69. Low 48.

Solutia OU-3 Remediation Action

Construction Daily Work Report

Day # _____

Project Number/Name:	OU-3
Safety Meeting Topic:	Be aware of your surroundings
Date:	11/18/15 Wednesday

Activities/ Deliveries

Specific task working and or accomplished today:
Worked in area C&D putting done geocells. Got rained out.

EQUIPMENT	HOURS	EQUIPMENT	HOURS
Rock Truck		Screen	
270 track hoe		Rock truck	
78 track hoe		Loader	
228 track hoe		D61 dozed	

LABOR

NAME	OCCUPATION	START TIME:	STOP TIME:	HOURS
Tyler crew	Forman 2 guys	6:30	10:00	7
Statlin Ponder	Labor	0:00	0:00	0
Jonathon Tenney	Labor	0:00	0:00	0
Bryan Mondough	Labor	6:30	8:30	2
			Total Crew Hours for Today:	9
			Total Crew Hours Cumulative:	3967.5

Details of Hauling/ Weight ticket # and tons

TRUCK	WEIGHT TICKET # / TONS	LOAD COUNT	ORIGIN	DESTINATION
TC truck				
TC truck				
TC truck				
Jerry truck				
Jerry truck				
Jerry truck				
Jerry truck				
Jerry truck				

Weather Report

Solutia OU-3 Remediation Action

Construction Daily Work Report

Day # 111

Project Number/Name:	OU-3
Safety Meeting Topic:	Foggy weather
Date:	11-19-15. Thursday

Activities/ Deliveries

Specific task working and or accomplished today:

AREA E:Brown's concrete poured up to raise the sign up and worked on forming and tieing rebar on the west side heading south. AREA C&D:put out 8,976 sq feet of geocells and backfilled with 11 loads of base.

EQUIPMENT	HOURS	EQUIPMENT	HOURS
31 dozer	10		
John deer skid steer	10		

LABOR

NAME	OCCUPATION	START TIME:	STOP TIME:	HOURS
Randy crew	Foreman 5 guys/safety	6:30	4:30	50
Jason	Safety	0:00		
Brown's concrete	4 guys	7:30	4:00	34
Chuck	Operator	6:30	4:30	10
			Total Crew Hours for Today:	94
			Total Crew Hours Cumulative:	10,310.50

Details of Hauling/ Weight ticket # and tons

TRUCK	WEIGHT TICKET # / TONS	LOAD COUNT	ORIGIN	DESTINATION
Taylor dump truck	1 truck	3 loads	Vulcan	Area C&D
Teague hauling	2 trucks	8 loads	Vulcan	Area C&D

Weather Report

Foggy. High 69. Low 42

Randy Hoskins

Solutia OU-3 Remediation Action

Construction Daily Work Report

Day # _____

Project Number/Name:	OU-3
Safety Meeting Topic:	Be aware of your surroundings
Date:	11/19/15 Thursday

Activities/ Deliveries

Specific task working and or accomplished today:
BORROW PIT: Put in rip rap check dam in sediment pond (800 sq ft of fabric/ 16" of class 1 rip rap) Cleared property line for fence.

EQUIPMENT	HOURS	EQUIPMENT	HOURS
Rock Truck	4	Screen	
270 track hoe	2	Rock truck	
200 track hoe	4	Loader	
228 track hoe	4	D61 dozed	2

LABOR

NAME	OCCUPATION	START TIME:	STOP TIME:	HOURS
Tyler crew	Forman 4 guys	6:30	4:30	40
Bryan Mondough	Labor	0:00	0:00	0
			Total Crew Hours for Today:	40
			Total Crew Hours Cumulative:	4007.5

Details of Hauling/ Weight ticket # and tons

TRUCK	WEIGHT TICKET # / TONS	LOAD COUNT	ORIGIN	DESTINATION
TC truck		4	McCartney	Borrow pit
TC truck		4	McCartney	Borrow pit
TC truck				
Jerry truck				
Jerry truck				
Jerry truck				
Jerry truck				
Jerry truck				

Weather Report

Solutia OU-3 Remediation Action

Construction Daily Work Report

Day # 112

Project Number/Name:	OU-3
Safety Meeting Topic:	Paperwork for the machines
Date:	11-20-15. Friday

Activities/ Deliveries

Specific task working and or accomplished today:

AREA E:Brown's concrete continued forming and tieing rebar on the west side for the wall and took form down away from the vault that they raised. AREA C&D:put in down 8,976 sq feet of geocells,and backfilled with 15 loads of base and rolled in.

EQUIPMENT	HOURS	EQUIPMENT	HOURS
31 dozer	10		
John deer skid steer	10		
Smooth roller	2		

LABOR

NAME	OCCUPATION	START TIME:	STOP TIME:	HOURS
Randy crew	Foreman 5 guys	6:30	4:30	50
Jason	Safety	6:30	4:30	10
Brown's concrete	3 guys	7:30	3:30	24
Chuck	Operator	6:30	4:30	10
			Total Crew Hours for Today:	94
			Total Crew Hours Cumulative:	10,404.50

Details of Hauling/ Weight ticket # and tons

TRUCK	WEIGHT TICKET # / TONS	LOAD COUNT	ORIGIN	DESTINATION
Taylor dump truck	1 truck	7 loads	Vulcan	Area C&D
Teague hauling	1 truck	8 loads	Vulcan	Area C&D

Weather Report

Sunny. High 64. Low 41

Randy Goodwin

Solutia OU-3 Remediation Action

Construction Daily Work Report

Day # _____

Project Number/Name:	OU-3
Safety Meeting Topic:	Be aware of your surroundings
Date:	11/20/15 Friday

Activities/ Deliveries

Specific task working and or accomplished today:
BORROW PIT/PCB CELL: load count 31 hauled screened material to PCB cell.

EQUIPMENT	HOURS	EQUIPMENT	HOURS
Rock Truck	10	Screen	
270 track hoe	10	Rock truck	10
200 track hoe		Loader	
228 track hoe		D61 dozed	10

LABOR

NAME	OCCUPATION	START TIME:	STOP TIME:	HOURS
Tyler crew	Forman 5 guys	6:30	5:00	52.5
			Total Crew Hours for Today:	52.5
			Total Crew Hours Cumulative:	4060

Details of Hauling/ Weight ticket # and tons

TRUCK	WEIGHT TICKET # / TONS	LOAD COUNT	ORIGIN	DESTINATION
TC truck				
TC truck				
TC truck				
Jerry truck				
Jerry truck				
Jerry truck				
Jerry truck				
Jerry truck				

Weather Report

Solutia OU-3 Remediation Action

Construction Daily Work Report

Day # _____

Project Number/Name:	OU-3
Safety Meeting Topic:	Be aware of your surroundings
Date:	11/21/15 Saturday

Activities/ Deliveries

Specific task working and or accomplished today:
BORROW PIT/PCB CELL: load count 28 hauled screened material to PCB cell.

EQUIPMENT	HOURS	EQUIPMENT	HOURS
Rock Truck	5	Screen	5
270 track hoe	5	Rock truck	5
200 track hoe	5	Loader	5
228 track hoe	5	D61 dozed	5

LABOR

NAME	OCCUPATION	START TIME:	STOP TIME:	HOURS
Tyler crew	Forman 5 guys	6:30	12:00	27.5
			Total Crew Hours for Today:	27.5
			Total Crew Hours Cumulative:	4087.5

Details of Hauling/ Weight ticket # and tons

TRUCK	WEIGHT TICKET # / TONS	LOAD COUNT	ORIGIN	DESTINATION
TC truck				
TC truck				
TC truck				
Jerry truck				
Jerry truck				
Jerry truck				
Jerry truck				
Jerry truck				

Weather Report

Solutia OU-3 Remediation Action

Construction Daily Work Report

Day # 114

Project Number/Name:	OU-3
Safety Meeting Topic:	Congestion,make sure to do the check list right
Date:	11-22-15. Sunday

Activities/ Deliveries

Specific task working and or accomplished today:

BORROW AREA: screened dirt.

EQUIPMENT	HOURS	EQUIPMENT	HOURS
228 track hoe	8		
200 track hoe	8		
250 loader	8		

LABOR

NAME	OCCUPATION	START TIME:	STOP TIME:	HOURS
Randy crew	Foreman 5 guys	6:30	3:00	42.5
Jason	Safety	6:30	3:00	8.5
Chuck	Operator	6:30	3:00	8.5
			Total Crew Hours for Today:	59.5
			Total Crew Hours Cumulative:	10,502.50

Details of Hauling/ Weight ticket # and tons

TRUCK	WEIGHT TICKET # / TONS	LOAD COUNT	ORIGIN	DESTINATION

Weather Report

Partly cloudy. High 49. Low 27

Randy Rush

Solutia OU-3 Remediation Action

Construction Daily Work Report

Day # _____

Project Number/Name:	OU-3
Safety Meeting Topic:	Be aware of your surroundings
Date:	11/22/15 Sunday

Activities/ Deliveries

Specific task working and or accomplished today:
BORROW PIT/PCB CELL: load count 32 hauled screened material to PCB cell.

EQUIPMENT	HOURS	EQUIPMENT	HOURS
Rock Truck	2	Screen	
270 track hoe	8	Rock truck	8
200 track hoe		Loader	
228 track hoe		D61 dozed	8

LABOR

NAME	OCCUPATION	START TIME:	STOP TIME:	HOURS
Tyler crew	Forman 4 guys	6:30	2:30	32
Bryan	Labor	0:00	0:00	0
			Total Crew Hours for Today:	32
			Total Crew Hours Cumulative:	4119.5

Details of Hauling/ Weight ticket # and tons

TRUCK	WEIGHT TICKET # / TONS	LOAD COUNT	ORIGIN	DESTINATION
TC truck				
TC truck				
TC truck				
Jerry truck				
Jerry truck				
Jerry truck				
Jerry truck				
Jerry truck				

Weather Report

Solutia OU-3 Remediation Action

Construction Daily Work Report

Day # 115

Project Number/Name:	OU-3
Safety Meeting Topic:	Stay focus
Date:	11-23-15. Monday

Activities/ Deliveries

Specific task working and or accomplished today:

AREA C&D:put down 4,488 sq feet of geocells and got in 1 load of base,got water to drain out with base at top of the hill. AREA E:Brown's concrete poured footer on the west side heading south. BORROW AREA: screened dirt.

EQUIPMENT	HOURS	EQUIPMENT	HOURS
John deer skid steer	5	Screen	5
228 track hoe	5		
200 track hoe	5		
250 loader	5		

LABOR

NAME	OCCUPATION	START TIME:	STOP TIME:	HOURS
Randy crew	Foreman 4 guys	6:30	4:30	40
Jason	Safety	6:30	4:00	9.5
Brown's concrete	4 guys	7:30	4:30	36
Chuck		0:00		
Deon		0:00	VACATION DAY	FUNERAL
			Total Crew Hours for Today:	85.5
			Total Crew Hours Cumulative:	10,588.00

Details of Hauling/ Weight ticket # and tons

TRUCK	WEIGHT TICKET # / TONS	LOAD COUNT	ORIGIN	DESTINATION
Taylor dump truck	1 truck	1	Vulcan	Area C&D

Weather Report

Sunny. High 56. Low 31

Solutia OU-3 Remediation Action

Construction Daily Work Report

Day # _____

Project Number/Name:	OU-3
Safety Meeting Topic:	Be aware of your surroundings
Date:	11/23/15 Monday

Activities/ Deliveries

Specific task working and or accomplished today:
BORROW PIT/PCB CELL: load count 27 hauled screened material to PCB cell. 5 loads of class one hauled in.

EQUIPMENT	HOURS	EQUIPMENT	HOURS
Rock Truck	10	Screen	
270 track hoe	10	Rock truck	
200 track hoe		37 dozer	10
228 track hoe		D61 dozed	10

LABOR

NAME	OCCUPATION	START TIME:	STOP TIME:	HOURS
Tyler crew	Forman 5 guys	6:30	4:30	50
			Total Crew Hours for Today:	50
			Total Crew Hours Cumulative:	4169.5

Details of Hauling/ Weight ticket # and tons

TRUCK	WEIGHT TICKET # / TONS	LOAD COUNT	ORIGIN	DESTINATION
TC truck		2	McCartney	Haul road
TC truck		3	McCartney	Stock piled at borrow pit
TC truck				
Jerry truck				
Jerry truck				
Jerry truck				
Jerry truck				
Jerry truck				

Weather Report

Solutia OU-3 Remediation Action

Construction Daily Work Report

Day # 116

Project Number/Name:	OU-3
Safety Meeting Topic:	Stay warm,check list,stay safe
Date:	11-24-15. Tuesday

Activities/ Deliveries

Specific task working and or accomplished today:

AREA E:Taylor spot dug up and probed down for utilities for new light poles,Acker electric finished drilling 2 holes and forming up both holes. AREA A:Matt and 2 other guys started joint sealing 6" caped concrete in area a. BORROW AREA:screened dirt,screen was down about 3 hrs from rock greeting hung in the belt and a plate was broke on the shaker part got Tyler to weld it back

EQUIPMENT	HOURS	EQUIPMENT	HOURS
228 track hoe	10		
200 track hoe	10		
250 loader	10		
Screen	7		

LABOR

NAME	OCCUPATION	START TIME:	STOP TIME:	HOURS
Randy crew	Foreman 4 guys	6:30	4:30	40
Jason	Safety	6:30	4:30	10
Brown's concrete		0:00		
Chuck	Operator	0:00		
Kevin		0:00	Off with his wife	
Matt	3 guys	6:30	4:30	30
Acker electric	5 guys	8:30	4:30	40
			Total Crew Hours for Today:	120
			Total Crew Hours Cumulative:	10,708

Details of Hauling/ Weight ticket # and tons

TRUCK	WEIGHT TICKET # / TONS	LOAD COUNT	ORIGIN	DESTINATION

Weather Report

Sunny. High 61. Low 37

Randy Hedrick

Solutia OU-3 Remediation Action

Construction Daily Work Report

Day # _____

Project Number/Name:	OU-3
Safety Meeting Topic:	Be aware of your surroundings
Date:	11/24/15 Tuesday

Activities/ Deliveries

Specific task working and or accomplished today:
BORROW PIT/PCB CELL: load count 44 hauled screened material to PCB cell.

EQUIPMENT	HOURS	EQUIPMENT	HOURS
Rock Truck	10	Screen	
270 track hoe	10	Rock truck	8
200 track hoe		37 dozer	10
228 track hoe		D61 dozed	10

LABOR

NAME	OCCUPATION	START TIME:	STOP TIME:	HOURS
Tyler Hollis	Forman	6:30	4:30	10
Jonathan Tenney	Labor	6:30	4:30	10
Statlin Ponder	Labor	6:30	4:30	10
Ethan Howle	Labor	6:30	4:30	10
Bryan Mondough	Labor	6:30	4:30	10
			Total Crew Hours for Today:	50
			Total Crew Hours Cumulative:	4219.5

Details of Hauling/ Weight ticket # and tons

TRUCK	WEIGHT TICKET # / TONS	LOAD COUNT	ORIGIN	DESTINATION
TC truck				
TC truck				
TC truck				
Jerry truck				
Jerry truck				
Jerry truck				
Jerry truck				
Jerry truck				

Weather Report

Solutia OU-3 Remediation Action

Construction Daily Work Report

Day # 117

Project Number/Name:	OU-3
Safety Meeting Topic:	Keep focus on your job
Date:	11-25-15. Wednesday

Activities/ Deliveries

Specific task working and or accomplished today:

AREA A: Matt and 2 other guys continued joint sealing concrete cap in area a. the light poles. BORROW AREA: screened dirt.

AREA E: Matt crew backfilled around light pole and Acker electric poured concrete for

EQUIPMENT	HOURS	EQUIPMENT	HOURS
228 track hoe	9.5		
200 track hoe	9.5		
250 loader	9.5		
Screen	9		

LABOR

NAME	OCCUPATION	START TIME:	STOP TIME:	HOURS
Randy crew	Foreman 5 guys	6:30	4:30	50
Jason	Safety	6:30	4:30	10
Brown's concrete		0:00		
Matt	3 guys	6:30	4:30	30
Acker electric	2 guys	10:30	1:30	6
Chuck		0:00		
			Total Crew Hours for Today:	96
			Total Crew Hours Cumulative:	10,804

Details of Hauling/ Weight ticket # and tons

TRUCK	WEIGHT TICKET # / TONS	LOAD COUNT	ORIGIN	DESTINATION

Weather Report

Sunny. High 62. Low 43

Solutia OU-3 Remediation Action

Construction Daily Work Report

Day # _____

Project Number/Name:	OU-3
Safety Meeting Topic:	Be aware of your surroundings
Date:	11/25/15 Wednesday

Activities/ Deliveries

Specific task working and or accomplished today:
BORROW PIT/PCB CELL: load count 48 hauled screened material to PCB cell.

EQUIPMENT	HOURS	EQUIPMENT	HOURS
Rock Truck	10	Screen	
270 track hoe	10	Rock truck	8
200 track hoe		37 dozer	10
228 track hoe		D61 dozed	10

LABOR

NAME	OCCUPATION	START TIME:	STOP TIME:	HOURS
Tyler Hollis	Forman	6:30	4:30	10
Jonathan Tenney	Labor	6:30	4:30	10
Statlin Ponder	Labor	6:30	4:30	10
Ethan Howle	Labor	6:30	4:30	10
Bryan Mondough	Labor	6:30	4:30	10
			Total Crew Hours for Today:	50
			Total Crew Hours Cumulative:	4269.5

Details of Hauling/ Weight ticket # and tons

TRUCK	WEIGHT TICKET # / TONS	LOAD COUNT	ORIGIN	DESTINATION
TC truck				
TC truck				
TC truck				
Jerry truck				
Jerry truck				
Jerry truck				
Jerry truck				
Jerry truck				

Weather Report

Solutia OU-3 Remediation Action

Construction Daily Work Report

Day # 118

Project Number/Name:	OU-3
Safety Meeting Topic:	Be safe
Date:	11-30-15. Monday

Activities/ Deliveries

Specific task working and or accomplished today:

BORROW AREA:screened dirt and loaded out dirt. AREA A:Siberton fence started instilling the fence in area a. AREA C&D:after lunch started back on geocells put in 3,366 sq feet

EQUIPMENT	HOURS	EQUIPMENT	HOURS
228 track hoe	10	John deer skid steer	5
270 track hoe	10		
200 track hoe	10		
Screen	10		

LABOR

NAME	OCCUPATION	START TIME:	STOP TIME:	HOURS
Randy crew	Foreman 5 guys	6:30	4:30	50
Jason	Safety	6:30	4:30	10
Brown's concrete		0:00		
Chuck	Operator	6:30	4:30	10
Siberton fence	3 guys	9:30	4:00	19.5
			Total Crew Hours for Today:	89.5
			Total Crew Hours Cumulative:	10,893.50

Details of Hauling/ Weight ticket # and tons

TRUCK	WEIGHT TICKET # / TONS	LOAD COUNT	ORIGIN	DESTINATION

Weather Report

Partly cloudy High 73. Low 60

Solutia OU-3 Remediation Action

Construction Daily Work Report

Day # _____

Project Number/Name:	OU-3
Safety Meeting Topic:	Be aware of your surroundings
Date:	11/30/15 Monday

Activities/ Deliveries

Specific task working and or accomplished today:
BORROW PIT/PCB CELL: load count 28 hauled screened material to PCB cell.

EQUIPMENT	HOURS	EQUIPMENT	HOURS
Rock Truck	10	Screen	
270 track hoe	10	Rock truck	8
200 track hoe		31dozer	10
228 track hoe		D61 dozed	10

LABOR

NAME	OCCUPATION	START TIME:	STOP TIME:	HOURS
Tyler Hollis	Forman	6:30	4:30	10
Jonathan Tenney	Labor	6:30	4:30	10
Statlin Ponder	Labor	6:30	4:30	10
Ethan Howle	Labor	6:30	4:30	10
Bryan Mondough	Labor	6:30	4:30	10
			Total Crew Hours for Today:	50
			Total Crew Hours Cumulative:	4319.5

Details of Hauling/ Weight ticket # and tons

TRUCK	WEIGHT TICKET # / TONS	LOAD COUNT	ORIGIN	DESTINATION
TC truck				
TC truck				
TC truck				
Jerry truck				
Jerry truck				
Jerry truck				
Jerry truck				
Jerry truck				

Weather Report

Solutia OU-3 Remediation Action

Construction Daily Work Report

Day # 119

Project Number/Name:	OU-3
Safety Meeting Topic:	Equipment,ppe,
Date:	12-1-15. Tuesday

Activities/ Deliveries

Specific task working and or accomplished today:

Borrow AREA: screen dirt and loaded out dirt on trucks

EQUIPMENT	HOURS	EQUIPMENT	HOURS
270 track hoe	9		
228 track hoe	9		
Screen	9		
200 track hoe	9		

LABOR

NAME	OCCUPATION	START TIME:	STOP TIME:	HOURS
Randy crew	Foreman 5 guys	6:30	3:30	45
Jason	Safety	6:30	2:30	8
Brown's concrete		0:00		
Chuck	Operator	6:30	3:00	8.5
			Total Crew Hours for Today:	61.5
			Total Crew Hours Cumulative:	10,955

Details of Hauling/ Weight ticket # and tons

TRUCK	WEIGHT TICKET # / TONS	LOAD COUNT	ORIGIN	DESTINATION

Weather Report

Showers. High 67. Low 56

Randy Goodwin

Solutia OU-3 Remediation Action

Construction Daily Work Report

Day # _____

Project Number/Name:	OU-3
Safety Meeting Topic:	Be aware of your surroundings
Date:	12/1/15 Tuesday

Activities/ Deliveries

Specific task working and or accomplished today:

BORROW PIT/PCB CELL: load count 10 hauled screened material to PCB cell. Rained about 10:00 and made the haul road at the PCB cell to slick for the trucks. Repaired entrance and exit haul roads with stone.

EQUIPMENT	HOURS	EQUIPMENT	HOURS
Rock Truck	5	Screen	
270 track hoe		Rock truck	5
250 loader	2	31dozer	5
228 track hoe		D61 dozed	5

LABOR

NAME	OCCUPATION	START TIME:	STOP TIME:	HOURS
Tyler Hollis	Forman	6:30	4:00	9.5
Jonathan Tenney	Labor	6:30	4:00	9.5
Statlin Ponder	Labor	6:30	4:00	9.5
Ethan Howle	Labor	6:30	4:00	9.5
Bryan Mondough	Labor	6:30	9:30	3
			Total Crew Hours for Today:	41
			Total Crew Hours Cumulative:	4360.5

Details of Hauling/ Weight ticket # and tons

TRUCK	WEIGHT TICKET # / TONS	LOAD COUNT	ORIGIN	DESTINATION
TC truck				
TC truck				
TC truck				
Jerry truck				
Jerry truck				
Jerry truck				
Jerry truck				
Jerry truck				

Weather Report

Solutia OU-3 Remediation Action

Construction Daily Work Report

Day # 120

Project Number/Name:	OU-3
Safety Meeting Topic:	Trips,slips,and falls
Date:	12-2-15. Wednesday

Activities/ Deliveries

Specific task working and or accomplished today:

AREA C&D: put down 13,464 sq feet of geocells and backfilled with 8 loads of base.

EQUIPMENT	HOURS	EQUIPMENT	HOURS
John deer skid steer	10		

LABOR

NAME	OCCUPATION	START TIME:	STOP TIME:	HOURS
Randy crew	Foreman 5 guys	6:30	4:30	50
Jason	Safety	6:30	4:30	10
Brown's concrete		0:00		
Chuck	Operator	6:30	4:30	10
Siberton fence		0:00		
			Total Crew Hours for Today:	70
			Total Crew Hours Cumulative:	11,025

Details of Hauling/ Weight ticket # and tons

TRUCK	WEIGHT TICKET # / TONS	LOAD COUNT	ORIGIN	DESTINATION
Taylor dump truck	1 truck	4 loads	Vulcan	Area C&D
Teague hauling	1 truck	4 loads	Vulcan	Area C&D

Weather Report

Occasional rain. High 59. Low 37

Solutia OU-3 Remediation Action

Construction Daily Work Report

Day # _____

Project Number/Name:	OU-3
Safety Meeting Topic:	Be aware of your surroundings
Date:	12/2/15 Wednesday

Activities/ Deliveries

Specific task working and or accomplished today:
Worked in area C&D putting down geo cells.

EQUIPMENT	HOURS	EQUIPMENT	HOURS
Rock Truck		Screen	
270 track hoe		Rock truck	
200 track hoe		31dozer	
228 track hoe		D61 dozed	

LABOR

NAME	OCCUPATION	START TIME:	STOP TIME:	HOURS
Tyler Hollis	Forman	6:30	4:30	10
Jonathan Tenney	Labor	6:30	4:30	10
Statlin Ponder	Labor	6:30	4:30	10
Ethan Howle	Labor	6:30	4:30	10
Bryan Mondough	Labor	6:30	4:30	10
			Total Crew Hours for Today:	50
			Total Crew Hours Cumulative:	4410.5

Details of Hauling/ Weight ticket # and tons

TRUCK	WEIGHT TICKET # / TONS	LOAD COUNT	ORIGIN	DESTINATION
TC truck				
TC truck				
TC truck				
Jerry truck				
Jerry truck				
Jerry truck				
Jerry truck				
Jerry truck				

Weather Report

Solutia OU-3 Remediation Action

Construction Daily Work Report

Day # 121

Project Number/Name:	OU-3
Safety Meeting Topic:	Ppe,equipment check list
Date:	12-3-15. Thursday

Activities/ Deliveries

Specific task working and or accomplished today:

AREA C&D: put down 17,952 sq feet of geocells and backfilled with 17 loads of base. AREA E: Acker electric looked at running new conduit for light poles and looked at trying to find where the power comes from. AREA A: siberton fence installed fence on the north,east and south at area a where they took down and on the north and northeast side put up new fence.

EQUIPMENT	HOURS	EQUIPMENT	HOURS
John deer skid steer	10		
31 dozer	10		

LABOR

NAME	OCCUPATION	START TIME:	STOP TIME:	HOURS
Randy crew	Foreman 5 guys	6:30	4:30	50
Jason	Safety	6:30	4:30	10
Chuck	Operator	6:30	4:30	10
siberton fence	3 guys	8:30	4:30	24
Acker electric	2 guys	12:30	2:30	4
Turner survey	3 guys	9:30	1:30	12
Frederick Sandlin,Reginald Boyd	Temp workers 2 guys	6:30	4:30	20
Christopher Bobo, D'Andre Bonds	Temp workers 2 guys	6:30	4:30	20
			Total Crew Hours for Today:	150
			Total Crew Hours Cumulative:	11,175

Details of Hauling/ Weight ticket # and tons

TRUCK	WEIGHT TICKET # / TONS	LOAD COUNT	ORIGIN	DESTINATION
Taylor dump truck	2 trucks	7	Vulcan	Area C&D
Teague hauling	1 truck	10	Vulcan	Area C&D

Weather Report

Sunny. High 55. Low 33

Solutia OU-3 Remediation Action

Construction Daily Work Report

Day # 122

Project Number/Name:	OU-3
Safety Meeting Topic:	Ppe,fire extinguisher,check list
Date:	12-4-15. Friday

Activities/ Deliveries

Specific task working and or accomplished today:

AREA A: siberton fence finished up with the fence and barbed wire on top of the fence. AREA E: Acker electric ran 131' of 1" conduit from one light pole to the other. AREA C&D:put down 13,464 sq feet of geocells and backfilled with 22 loads of base and rolled in.

EQUIPMENT	HOURS	EQUIPMENT	HOURS
John deer skid steer	10		
31 dozer	10		
Smooth drum roller	3		

LABOR

NAME	OCCUPATION	START TIME:	STOP TIME:	HOURS
Frank		**6:30**	**5:00**	**10.5**
Randy crew	Foreman 4 guys	6:30	4:30	40
Jason	Safety	6:30	4:30	10
Chuck	Operator	6:30	4:30	10
Frederick Sandlin, Reginald Boyd	Temp workers 2 guys	6:30	4:30	20
D'Andre Bonds	Temp workers	6:30	4:30	10
Acker electric	2 guys	12:30	2:00	3
Siberton fence	2 guys	11:30	3:30	8
Christopher Bobo	Temp worker. Late	7:00	4:30	9.5
			Total Crew Hours for Today:	121
			Total Crew Hours Cumulative:	11,296

Details of Hauling/ Weight ticket # and tons

TRUCK	WEIGHT TICKET # / TONS	LOAD COUNT	ORIGIN	DESTINATION
Taylor dump trucks	2 trucks	13 loads	Vulcan	Area C&D
Teague hauling	1 truck	9 loads	Vulcan	Area C&D

Weather Report

Sunny. High 60. Low 34

Solutia OU-3 Remediation Action

Construction Daily Work Report

Day # _____

Project Number/Name:	OU-3
Safety Meeting Topic:	Be aware of your surroundings
Date:	12/4/15 Friday

Activities/ Deliveries

Specific task working and or accomplished today:
BORROW PIT: Screened and stock piled material for PCB cell.

EQUIPMENT	HOURS	EQUIPMENT	HOURS
Rock Truck		Screen	
270 track hoe		Rock truck	
200 track hoe		31dozer	
228 track hoe		D61 dozed	

LABOR

NAME	OCCUPATION	START TIME:	STOP TIME:	HOURS
Tyler Hollis	Forman	6:30	5:00	10.5
Jonathan Tenney	Labor	6:30	5:00	10.5
Statlin Ponder	Labor	6:30	5:00	10.5
Ethan Howle	Labor	6:30	5:00	10.5
Bryan Mondough	Labor	6:30	4:30	10
			Total Crew Hours for Today:	52
			Total Crew Hours Cumulative:	4410.5

Details of Hauling/ Weight ticket # and tons

TRUCK	WEIGHT TICKET # / TONS	LOAD COUNT	ORIGIN	DESTINATION
TC truck				
TC truck				
TC truck				
Jerry truck				
Jerry truck				
Jerry truck				
Jerry truck				
Jerry truck				

Weather Report

Solutia OU-3 Remediation Action

Construction Daily Work Report

Day # 123

Project Number/Name:	OU-3
Safety Meeting Topic:	Work safe
Date:	12-5-15. Saturday

Activities/ Deliveries

Specific task working and or accomplished today:

AREA A:took down and removed temporary fence that was in the parking lot.

AREA C&D:put down 8,976 sq feet of geocells.

EQUIPMENT	HOURS	EQUIPMENT	HOURS
John deer skid steer	7		

LABOR

NAME	OCCUPATION	START TIME:	STOP TIME:	HOURS
Randy crew	Foreman 4 guys	6:30	2:30	32
Jason	Safety	0:00		
Chuck		0:00		
Frederick Sandlin, Reginald Boyd	Temp workers 2 guys	6:30	2:30	16
Christopher Bobo, D'Andre Bonds	Temp workers 2 guys	6:30	2:30	16
Frank		6:30	2:30	8
			Total Crew Hours for Today:	62
			Total Crew Hours Cumulative:	11,358

Details of Hauling/ Weight ticket # and tons

TRUCK	WEIGHT TICKET # / TONS	LOAD COUNT	ORIGIN	DESTINATION

Weather Report

Sunny. High 63. Low 39

Randy Sandlin

Solutia OU-3 Remediation Action

Construction Daily Work Report

Day # _____

Project Number/Name:	OU-3
Safety Meeting Topic:	Be aware of your surroundings
Date:	12/5/15 Saturday

Activities/ Deliveries

Specific task working and or accomplished today:
LOAD COUNT: 32 BORROW PIT : screened dirt. PCB CELL: hauled screened material to the haul road on the PCB cell.

EQUIPMENT	HOURS	EQUIPMENT	HOURS
Rock Truck	8	Screen	8
270 track hoe	8	Rock truck	8
200 track hoe	8	31dozer	
228 track hoe		D61 dozed	8

LABOR

NAME	OCCUPATION	START TIME:	STOP TIME:	HOURS
Tyler Hollis	Forman	6:30	2:30	8
Jonathan Tenney	Labor	6:30	2:30	8
Statlin Ponder	Labor	6:30	2:30	8
Ethan Howle	Labor	6:30	2:30	8
Bryan Mondough	Labor	6:30	2:30	8
Matt Owen	Forman	6:30	2:30	8
			Total Crew Hours for Today:	48
			Total Crew Hours Cumulative:	4550

Details of Hauling/ Weight ticket # and tons

TRUCK	WEIGHT TICKET # / TONS	LOAD COUNT	ORIGIN	DESTINATION
TC truck				
TC truck				
TC truck				
Jerry truck				
Jerry truck				
Jerry truck				
Jerry truck				
Jerry truck				

Weather Report

Solutia OU-3 Remediation Action

Construction Daily Work Report

Day # 124

Project Number/Name:	OU-3
Safety Meeting Topic:	
Date:	12-6-15 Sunday

Activities/ Deliveries

Specific task working and or accomplished today:
Frank helped Tyler

EQUIPMENT	HOURS	EQUIPMENT	HOURS

LABOR

NAME	OCCUPATION	START TIME:	STOP TIME:	HOURS
Randy crew	Foreman 5 guys			
Jason	Safety			
Frank		6:30	2:30	8
			Total Crew Hours for Today:	8
			Total Crew Hours Cumulative:	11,366

Details of Hauling/ Weight ticket # and tons

TRUCK	WEIGHT TICKET # / TONS	LOAD COUNT	ORIGIN	DESTINATION

Weather Report

Solutia OU-3 Remediation Action

Construction Daily Work Report

Day # 125

Project Number/Name:	OU-3
Safety Meeting Topic:	Task at hand,check equipment
Date:	12-7-15. Monday

Activities/ Deliveries

Specific task working and or accomplished today:

AREA E: Brown's concrete started back on tieing steel and form on the north west corner heading south. AREA C&D:put down 7,480 sq feet of geocells and backfilled with 24 loads of base,and rolled in.

EQUIPMENT	HOURS	EQUIPMENT	HOURS
John deer skid steer	10		
31 dozer	10		
Smooth roller	3		

LABOR

NAME	OCCUPATION	START TIME:	STOP TIME:	HOURS
Randy crew	Foreman 4 guys	6:30	4:30	40
Jason	Safety	6:30	4:30	10
Chuck	Operator	6:30	4:30	10
Bryan Mondabaugh	Labor	6:30	4:30	10
Frederick Sandlin, Reginald Boyd	Temp workers 2 guys	6:30	4:30	20
Christopher Bobo, D'Andre Bonds	Temp workers 2 guys	6:30	4:30	20
Brown's concrete	3 guys	9:00	3:30	19.5
			Total Crew Hours for Today:	129.5
			Total Crew Hours Cumulative:	11,495.50

Details of Hauling/ Weight ticket # and tons

TRUCK	WEIGHT TICKET # / TONS	LOAD COUNT	ORIGIN	DESTINATION
Taylor dump truck	2 trucks	14	Vulcan	Area C&D
Teague hauling	1 truck	10	Vulcan	Area C&D

Weather Report

Sunny. High 66. Low 35

Solutia OU-3 Remediation Action

Construction Daily Work Report

Day # _____

Project Number/Name:	OU-3
Safety Meeting Topic:	Electrical hazards
Date:	12/7/15 Monday

Activities/ Deliveries

Specific task working and or accomplished today:
LOAD COUNT: 29 hauled screened dirt to PCB cell. Screen dirt.

EQUIPMENT	HOURS	EQUIPMENT	HOURS
Rock Truck	10	Screen	10
270 track hoe	10	Rock truck	10
200 track hoe	10	Loader	10
228 track hoe		D61 dozed	10

LABOR

NAME	OCCUPATION	START TIME:	STOP TIME:	HOURS
Tyler Hollis	Forman	6:30	4:30	10
Jonathan Tenney	Labor	6:30	4:30	10
Statlin Ponder	Labor	6:30	4:30	10
Ethan Howle	Labor	6:30	4:30	10
Frank Hollis	Labor	6:30	4:30	10
Matt Owen	Forman	6:30	4:30	10
			Total Crew Hours for Today:	60
			Total Crew Hours Cumulative:	4650

Details of Hauling/ Weight ticket # and tons

TRUCK	WEIGHT TICKET # / TONS	LOAD COUNT	ORIGIN	DESTINATION
TC truck				
TC truck				
TC truck				
Jerry truck				
Jerry truck				
Jerry truck				
Jerry truck				
Jerry truck				

Weather Report

Solutia OU-3 Remediation Action

Construction Daily Work Report

Day # 126

Project Number/Name:	OU-3
Safety Meeting Topic:	Electrical safety
Date:	12-8-15. Tuesday

Activities/ Deliveries

Specific task working and or accomplished today:

AREA E:Brown's concrete continued on forming and tieing rebar on the west and north west side for the wall. AREA C&D: put down 5,984 sq feet of geocells and backfilled with 17 loads of base and rolled in.

EQUIPMENT	HOURS	EQUIPMENT	HOURS
31 dozer	10		
Smooth roller	3		
John deer skid steer	10		

LABOR

NAME	OCCUPATION	START TIME:	STOP TIME:	HOURS
Kevin		6:30	4:30	10
Jason	Safety	6:30	3:00	8.5
Chuck	Operator	6:30	4:30	10
Bryan Mondabaugh	Labor	6:30	4:30	10
Frederick Sandlin, Regiald Boyd	Temp workers 2 guys	6:30	4:30	20
D'Andre Bonds	Temp worker	6:30	4:30	10
Brown's concrete	3 guys	8:00	4:00	24
Chris		6:30	4:30	10
			Total Crew Hours for Today:	102.5
			Total Crew Hours Cumulative:	11,598.00

Details of Hauling/ Weight ticket # and tons

TRUCK	WEIGHT TICKET # / TONS	LOAD COUNT	ORIGIN	DESTINATION
Taylor dump truck	1 truck	7 loads	Vulcan	Area C&D
Teague hauling	2 trucks	10 loads	Vulcan	Area C&D

Weather Report

Sunny. High 65. Low 41

Randy Hoskins

Solutia OU-3 Remediation Action

Construction Daily Work Report

Day # 1

Project Number/Name:	OU-3 ground water. (Job # 1504)
Safety Meeting Topic:	
Date:	12-8-15. Tuesday

Activities/ Deliveries

Specific task working and or accomplished today:

GROUND WATER: Spot dug up poly line in two spots at well I.w.41 in front of the employees parking lot,then spot dug up poly line at well I.w.13 on the pcb cell side of the road and found 90 bend that headed south and the bands that where on the 90 were rusted into.

EQUIPMENT	HOURS	EQUIPMENT	HOURS

LABOR

NAME	OCCUPATION	START TIME:	STOP TIME:	HOURS
Randy		6:30	4:30	10
Deon		6:30	4:30	10
Jason		2:00	3:30	1.5
			Total Crew Hours for Today:	21.5
			Total Crew Hours Cumulative:	21.5

Details of Hauling/ Weight ticket # and tons

TRUCK	WEIGHT TICKET # / TONS	LOAD COUNT	ORIGIN	DESTINATION

Weather Report

Randy Goodwin

Solutia OU-3 Remediation Action

Construction Daily Work Report

Day # _____

Project Number/Name:	OU-3
Safety Meeting Topic:	Electrical hazards
Date:	12/8/15 Tuesday

Activities/ Deliveries

Specific task working and or accomplished today:
LOAD COUNT: 11 loads of tope soil 11 loads of screened material. Hauled screened material and tope soil to the PCB cell. Worked on southern slope of the borrow area.

EQUIPMENT	HOURS	EQUIPMENT	HOURS
Rock Truck	10	Screen	10
270 track hoe	10	Rock truck	10
200 track hoe	10	Loader	10
228 track hoe	2	D61 dozed	10

LABOR

NAME	OCCUPATION	START TIME:	STOP TIME:	HOURS
Tyler Hollis	Forman	6:30	4:30	10
Jonathan Tenney	Labor	6:30	4:30	10
Statlin Ponder	Labor	6:30	4:30	10
Ethan Howle	Labor	6:30	4:30	10
Frank Hollis	Labor	6:30	4:30	10
Matt Owen	Forman	6:30	4:30	10
			Total Crew Hours for Today:	60
			Total Crew Hours Cumulative:	4710

Details of Hauling/ Weight ticket # and tons

TRUCK	WEIGHT TICKET # / TONS	LOAD COUNT	ORIGIN	DESTINATION
TC truck				
TC truck				
TC truck				
Jerry truck				
Jerry truck				
Jerry truck				
Jerry truck				
Jerry truck				

Weather Report

Solutia OU-3 Remediation Action

Construction Daily Work Report

Day # 127

Project Number/Name:	OU-3
Safety Meeting Topic:	Underground utilities,and spotters
Date:	12-9-15. Wednesday

Activities/ Deliveries

Specific task working and or accomplished today:

AREA C&D: backfilled geocells with 12 loads of bases. AREA E: Brown's concrete continued forming and tieing rebar for the wall on the north and west side.

EQUIPMENT	HOURS	EQUIPMENT	HOURS
John deer skid steer	3		
Smooth roller	2		
31 dozer	6		

LABOR

NAME	OCCUPATION	START TIME:	STOP TIME:	HOURS
Jason	Safety	6:30	3:30	9
Chuck	Operator	6:30	4:30	10
Bryan M.	Labor	6:30	4:30	10
	Temp workers 2 guys	6:30	11:00	9
	Temp worker	6:30	11:30	5
Brown's concrete	3 guys	7:30	4:00	25.5
			Total Crew Hours for Today:	68.5
			Total Crew Hours Cumulative:	11,667

Details of Hauling/ Weight ticket # and tons

TRUCK	WEIGHT TICKET # / TONS	LOAD COUNT	ORIGIN	DESTINATION
Taylor dump truck	1 truck	7 loads	Vulcan	Area C&D
Teague hauling	1 truck	5 loads	Vulcan	Area C&D

Weather Report

Sunny. High 67. Low 49

Randy Godwin

Solutia OU-3 Remediation Action

Construction Daily Work Report

Day # 2

Project Number/Name:	OU-3 ground water. (Job # 1504)
Safety Meeting Topic:	
Date:	12-9-15. Wednesday

Activities/ Deliveries

Specific task working and or accomplished today:

GROUND WATER:look and spot dug up poly lines at well l.w.13 followed two pole lines to see where they went to,one out of the 90 bend from the well dug up to the gravel road,and the other line that went back towards the 90 from east to west up at the 90 it had been cut off.Then we tried to locate the poly lines that went across hwy 202 on the west side of the well couldn't find any.

EQUIPMENT	HOURS	EQUIPMENT	HOURS
78 mini hoe	7		

LABOR

NAME	OCCUPATION	START TIME:	STOP TIME:	HOURS
Randy	Supervisor	6:30	4:30	10
Deon	Labor	6:30	4:30	10
Kevin	Labor	6:30	4:30	10
Chris	Labor	6:30	4:30	10
Jason	Safety	3:00	4:00	1
			Total Crew Hours for Today:	41
			Total Crew Hours Cumulative:	62.5

Details of Hauling/ Weight ticket # and tons

TRUCK	WEIGHT TICKET # / TONS	LOAD COUNT	ORIGIN	DESTINATION

Weather Report

Randy Goodwin

Solutia OU-3 Remediation Action

Construction Daily Work Report

Day # _____

Project Number/Name:	OU-3
Safety Meeting Topic:	Electrical hazards
Date:	12/9/15 Wednesday

Activities/ Deliveries

Specific task working and or accomplished today:

LOAD COUNT: 56 loads of tope soil hauled to the south west corner of the PCB cell. Got the 6" cover of tope soil in the south west corner of PCB cell and started stock piling more tope soil off the side of the entrance haul road on the PCB cell. BORROW PIT: screened and stock piled good dirt.

EQUIPMENT	HOURS	EQUIPMENT	HOURS
Rock Truck	10	Screen	10
270 track hoe	10	Rock truck	10
200 track hoe	10	Loader	10
228 track hoe	8	D61 dozed	10

LABOR

NAME	OCCUPATION	START TIME:	STOP TIME:	HOURS
Tyler Hollis	Forman	6:30	4:30	10
Jonathan Tenney	Labor	6:30	4:30	10
Statlin Ponder	Labor	6:30	4:30	10
Ethan Howle	Labor	6:30	11:00	4.5
Frank Hollis	Labor	6:30	4:30	10
Matt Owen	Forman	6:30	4:30	10
			Total Crew Hours for Today:	54.5
			Total Crew Hours Cumulative:	4764.5

Details of Hauling/ Weight ticket # and tons

TRUCK	WEIGHT TICKET # / TONS	LOAD COUNT	ORIGIN	DESTINATION
TC truck				
TC truck				
TC truck				
Jerry truck				
Jerry truck				
Jerry truck				
Jerry truck				
Jerry truck				

Weather Report

Solutia OU-3 Remediation Action

Construction Daily Work Report

Day # 128

Project Number/Name:	OU-3
Safety Meeting Topic:	Make sure do the check sheet right,check equipment
Date:	12-10-15. Thursday

Activities/ Deliveries

7 rolls of 10 oz fabric

Specific task working and or accomplished today:

AREA E:Brown's concrete poured wall on the south west and west side heading south. AREA A:siberton fence started driving poles on the north side other side of the entrance road. AREA C&D: continued backfilling geocells with 12 loads of base.

EQUIPMENT	HOURS	EQUIPMENT	HOURS
31 dozer	8		
Smooth roller	2		

LABOR

NAME	OCCUPATION	START TIME:	STOP TIME:	HOURS
Siberton fence	3 guys	12:00	4:30	13.5
Jason	Safety	6:30	3:00	8.5
Chuck	Operator	6:30	4:30	10
Brown's concrete	4 guys	7:30	4:00	34
			Total Crew Hours for Today:	66
			Total Crew Hours Cumulative:	11,733

Details of Hauling/ Weight ticket # and tons

TRUCK	WEIGHT TICKET # / TONS	LOAD COUNT	ORIGIN	DESTINATION
Taylor dump truck	1 truck	4 loads	Vulcan	Area C&D
Teague hauling	1 truck	8 loads	Vulcan	Area C&D

Weather Report

Partly cloudy. High 67. Low 46

Solutia OU-3 Remediation Action

Construction Daily Work Report

Day # 3

Project Number/Name:	OU-3 ground water. (job # 1504)
Safety Meeting Topic:	
Date:	12-10-15. Thursday

Activities/ Deliveries

Specific task working and or accomplished today:

GROUND WATER: spot dug up on the east side of I.w 13 well from the poly line that was cut off to the fence that started digging on the west side of the well started at 120' from I.w.13 on the west headed back east to well with 24" wide ditch 24" dee and probing trying to find the poly lines found 2 lines 65' from the well west side,backfilled the holes on the east side and west side up to the lines we found.

EQUIPMENT	HOURS	EQUIPMENT	HOURS
78 mini hoe	10		

LABOR

NAME	OCCUPATION	START TIME:	STOP TIME:	HOURS
Randy		6:30	4:30	10
Deon		6:30	4:30	10
Kevin		6:30	4:30	10
Chris		6:30	4:30	10
Bryan		6:30	4:30	10
Jason	Safety	10:00	10:30	0.5
Jason	Safety	2:00	3:00	1
			Total Crew Hours for Today:	51.5
			Total Crew Hours Cumulative:	114

Details of Hauling/ Weight ticket # and tons

TRUCK	WEIGHT TICKET # / TONS	LOAD COUNT	ORIGIN	DESTINATION

Weather Report

Solutia OU-3 Remediation Action

Construction Daily Work Report

Day # _____

Project Number/Name:	OU-3
Safety Meeting Topic:	Equipment maintance
Date:	12/10/15 Thursday

Activities/ Deliveries

Specific task working and or accomplished today:
LOAD COUNT: 4 loads of tope soil hauled to PCB cell to stock pile. 40 loads of screened material hauled to PCB cell for 1' lift. BORROW PIT: screened and stock piled good dirt.

EQUIPMENT	HOURS	EQUIPMENT	HOURS
Rock Truck	10	Screen	10
270 track hoe	10	Rock truck	10
200 track hoe	10	Loader	10
228 track hoe	8	D61 dozed	10

LABOR

NAME	OCCUPATION	START TIME:	STOP TIME:	HOURS
Tyler Hollis	Forman	6:30	5:00	10.5
Jonathan Tenney	Labor	6:30	5:00	10.5
Statlin Ponder	Labor	6:30	5:00	10.5
Ethan Howle	Labor	6:30	5:00	10.5
Frank Hollis	Labor	6:30	5:00	10.5
Matt Owen	Forman	6:30	5:00	10.5
			Total Crew Hours for Today:	63
			Total Crew Hours Cumulative:	4827.5

Details of Hauling/ Weight ticket # and tons

TRUCK	WEIGHT TICKET # / TONS	LOAD COUNT	ORIGIN	DESTINATION
TC truck				
TC truck				
TC truck				
Jerry truck				
Jerry truck				
Jerry truck				
Jerry truck				
Jerry truck				

Weather Report

Solutia OU-3 Remediation Action

Construction Daily Work Report

Day # 129

Project Number/Name:	OU-3
Safety Meeting Topic:	Slips,trips,and falls
Date:	12-11-15. Friday

Activities/ Deliveries

Specific task working and or accomplished today:

AREA E: redug and graded where the footer had to be wider 63' long x 4' wide on the west side heading east and dug out the section that wasn't dug out heading south 53' long x 2' wide and graded it and tamped in. AREA C&D:finished up backfilling geocells with 17 loads of base.

EQUIPMENT	HOURS	EQUIPMENT	HOURS
78 mini hoe	8		
John deer skid steer	10		
31 dozer	10		
Smooth roller	2		

LABOR

NAME	OCCUPATION	START TIME:	STOP TIME:	HOURS
Randy crew	Foreman 4 guys	6:30	4:30	40
Jason	Safety	6:30	4:30	10
Bryan M		6:30	5:00	10.5
Siberton fence	3 guys	9:30	3:00	16.5
Chuck	Operator	6:30	4:30	10
			Total Crew Hours for Today:	87
			Total Crew Hours Cumulative:	11,820

Details of Hauling/ Weight ticket # and tons

TRUCK	WEIGHT TICKET # / TONS	LOAD COUNT	ORIGIN	DESTINATION
Teague hauling	1 truck	1	Vulcan	Area E regrading footer
Teague hauling	1 truck	1	Vulcan	Area A gradeing around piv
Taylor dump truck	1 truck	9 loads	Vulcan	Area C&D
Teague hauling	1 truck	8 loads	Vulcan	Area C&D

Weather Report

Mostly cloudy. High 74. Low 56

Randy Goodwin

Solutia OU-3 Remediation Action

Construction Daily Work Report

Day # _____

Project Number/Name:	OU-3
Safety Meeting Topic:	Trip hazards
Date:	12/11/15 Friday

Activities/ Deliveries

Specific task working and or accomplished today:
LOAD COUNT: 42 Hauled screened material to PCB cell.

EQUIPMENT	HOURS	EQUIPMENT	HOURS
Rock Truck	10	Screen	10
270 track hoe	10	Rock truck	10
200 track hoe	10	Loader	10
228 track hoe	8	D61 dozed	10

LABOR

NAME	OCCUPATION	START TIME:	STOP TIME:	HOURS
Tyler Hollis	Forman	6:30	5:00	10.5
Jonathan Tenney	Labor	6:30	5:00	10.5
Statlin Ponder	Labor	6:30	3:00	8.5
Ethan Howle	Labor	6:30	5:00	10.5
Frank Hollis	Labor	6:30	5:00	10.5
Matt Owen	Forman	6:30	5:00	10.5
			Total Crew Hours for Today:	61
			Total Crew Hours Cumulative:	4888.5

Details of Hauling/ Weight ticket # and tons

TRUCK	WEIGHT TICKET # / TONS	LOAD COUNT	ORIGIN	DESTINATION
TC truck				
TC truck				
TC truck				
Jerry truck				
Jerry truck				
Jerry truck				
Jerry truck				
Jerry truck				

Weather Report

Solutia OU-3 Remediation Action

Construction Daily Work Report

Day # _____

Project Number/Name:	OU-3
Safety Meeting Topic:	Trip hazards
Date:	12/12/15 Saturday

Activities/ Deliveries

Specific task working and or accomplished today:
LOAD COUNT: 27 screened dirt 28 tope soil. Hauled screened material to PCB cell.

EQUIPMENT	HOURS	EQUIPMENT	HOURS
Rock Truck	8	Screen	8
270 track hoe	8	Rock truck	8
200 track hoe	8	Loader	8
31 dozen	8	D61 dozed	8

LABOR

NAME	OCCUPATION	START TIME:	STOP TIME:	HOURS
Tyler Hollis	Forman	6:30	3:00	8.5
Jonathan Tenney	Labor	6:30	3:00	8.5
Statlin Ponder	Labor	6:30	3:00	8.5
Ethan Howle	Labor	6:30	3:00	8.5
Frank Hollis	Labor	6:30	3:00	8.5
Matt Owen	Forman	6:30	3:00	8.5
Richard Thompson	Operator	6:30	3:00	8.5
			Total Crew Hours for Today:	59.5
			Total Crew Hours Cumulative:	4948

Details of Hauling/ Weight ticket # and tons

TRUCK	WEIGHT TICKET # / TONS	LOAD COUNT	ORIGIN	DESTINATION
TC truck				
TC truck				
TC truck				
Jerry truck				
Jerry truck				
Jerry truck				
Jerry truck				
Jerry truck				

Weather Report

Solutia OU-3 Remediation Action

Construction Daily Work Report

Day # 130

Project Number/Name:	OU-3
Safety Meeting Topic:	Vehicle safety
Date:	12-14-15. Monday

Activities/ Deliveries

Specific task working and or accomplished today:
AREA C&D:hauled in 14 loads

EQUIPMENT	HOURS	EQUIPMENT	HOURS

LABOR

NAME	OCCUPATION	START TIME:	STOP TIME:	HOURS
Randy crew	Foreman 4 guys	6:30	7:30	4
Jason	Safety	6:30	9:30	3
Bryan M		6:30	7:30	1
Brown's concrete		0:00		
Siberton fence		0:00		
			Total Crew Hours for Today:	8
			Total Crew Hours Cumulative:	11,828

Details of Hauling/ Weight ticket # and tons

TRUCK	WEIGHT TICKET # / TONS	LOAD COUNT	ORIGIN	DESTINATION
Taylor dump truck	2 trucks	4 loads	Vulcan	Area C&D class 1 riprap
Benchmark trucks	2 trucks	10 loads	Vulcan	Area C&D class 1 riprap

Weather Report

Rain early. High 66. Low 43

Randy Goodwin

Solutia OU-3 Remediation Action

Construction Daily Work Report

Day # _____

Project Number/Name:	OU-3
Safety Meeting Topic:	Safety check lists
Date:	12/14/15 Monday

Activities/ Deliveries

Specific task working and or accomplished today:
Rained out

EQUIPMENT	HOURS	EQUIPMENT	HOURS
Rock Truck		Screen	
270 track hoe		Rock truck	
200 track hoe		Loader	
31 dozen		D61 dozed	

LABOR

NAME	OCCUPATION	START TIME:	STOP TIME:	HOURS
Tyler Hollis	Forman	6:30	10:00	3.5
Jonathan Tenney	Labor	6:30	9:00	2.5
Statlin Ponder	Labor	6:30	9:00	2.5
Ethan Howle	Labor	6:30	9:00	2.5
Frank Hollis	Labor	6:30	9:00	2.5
Matt Owen	Forman	6:30	8:30	2
			Total Crew Hours for Today:	15.5
			Total Crew Hours Cumulative:	4963.5

Details of Hauling/ Weight ticket # and tons

TRUCK	WEIGHT TICKET # / TONS	LOAD COUNT	ORIGIN	DESTINATION
TC truck				
TC truck				
TC truck				
Jerry truck				
Jerry truck				
Jerry truck				
Jerry truck				
Jerry truck				

Weather Report

Solutia OU-3 Remediation Action

Construction Daily Work Report

Day # 131

Project Number/Name:	OU-3
Safety Meeting Topic:	Check list,bmp's
Date:	12-15-15. Tuesday

Activities/ Deliveries

Specific task working and or accomplished today:

AREA A:removed 236' of fence east to west run beside Eastman contractor parking.siberton fence drove post on very north side of area a and we helped put in 3 gate post on new entrance road. AREA E:got up old silt fence and put in roll off. AREA C&D:put in 277' long x 12' wide of riprap around edge of geocell started on the west side heading north used 4,155 sq feet of 10 oz fabric.

EQUIPMENT	HOURS	EQUIPMENT	HOURS
John deer skid steer	10		

LABOR

NAME	OCCUPATION	START TIME:	STOP TIME:	HOURS
Randy crew	Foreman 4 guys	6:30	4:30	40
Jason	Safety	6:30	4:30	10
Bryan M		6:30	4:30	10
Brown's concrete		0:00		
Siberton fence	4 guys	9:00	4:00	28
Chuck	Operator	6:30	4:30	10
			Total Crew Hours for Today:	98
			Total Crew Hours Cumulative:	11,926

Details of Hauling/ Weight ticket # and tons

TRUCK	WEIGHT TICKET # / TONS	LOAD COUNT	ORIGIN	DESTINATION

Weather Report

Sunny. High 70. Low 40

Solutia OU-3 Remediation Action

Construction Daily Work Report

Day # _____

Project Number/Name:	OU-3
Safety Meeting Topic:	Safety check lists
Date:	12/15/15 Tuesday

Activities/ Deliveries

Specific task working and or accomplished today:
Screened and stock piled dirt. Put in 50' of 24" drain pipe and head wall under entrance road to borrow pit. 510 sq ft of fabric and rip rap put in the drainage ditch.

EQUIPMENT	HOURS	EQUIPMENT	HOURS
Rock Truck		Screen	10
270 track hoe	10	Rock truck	
200 track hoe	10	Loader	10
228 track hoe	10	D61 dozed	

LABOR

NAME	OCCUPATION	START TIME:	STOP TIME:	HOURS
Tyler Hollis	Forman	6:30	4:30	10
Jonathan Tenney	Labor	6:30	4:30	10
Statlin Ponder	Labor	6:30	4:30	10
Ethan Howle	Labor	6:30	4:30	10
Frank Hollis	Labor	6:30	4:30	10
Matt Owen	Forman	6:30	4:30	10
			Total Crew Hours for Today:	60
			Total Crew Hours Cumulative:	5023.5

Details of Hauling/ Weight ticket # and tons

TRUCK	WEIGHT TICKET # / TONS	LOAD COUNT	ORIGIN	DESTINATION
TC truck				
TC truck				
TC truck				
Jerry truck				
Jerry truck				
Jerry truck				
Jerry truck				
Jerry truck				

Weather Report

Solutia OU-3 Remediation Action

Construction Daily Work Report

Day # 4

Project Number/Name:	OU-3. Ground water
Safety Meeting Topic:	Underground electric
Date:	12-16-15. Wednesday

Activities/ Deliveries

Specific task working and or accomplished today:

Started digging up the 2 line trying to find out where they were tied in at on the 2" line farther west we found a tee there and haven't found the one closet to I.w.13,backfilled the hole up and dressed up.

EQUIPMENT	HOURS	EQUIPMENT	HOURS
78 mini hoe	4		

LABOR

NAME	OCCUPATION	START TIME:	STOP TIME:	HOURS
Randy crew	Foreman 4 guys	6:30	12:30	24
Jason	Safety	6:30	8:30	2
Bryan M		6:30	12:30	6
			Total Crew Hours for Today:	32
			Total Crew Hours Cumulative:	146

Details of Hauling/ Weight ticket # and tons

TRUCK	WEIGHT TICKET # / TONS	LOAD COUNT	ORIGIN	DESTINATION

Weather Report

Mostly sunny. High 72. Low 56

Solutia OU-3 Remediation Action

Construction Daily Work Report

Day # 132

Project Number/Name:	OU-3
Safety Meeting Topic:	Underground electricity
Date:	12-16-15. Wednesday

Activities/ Deliveries

Specific task working and or accomplished today:

AREA A:siberton fence started hanging fence on the very north side of area a. AREA E: Brown's concrete took down forms on the last section of wall they poured on the north and west side of area e. AREA C&D:put of riprap on the west side headed north and some on the south side 136' long x 12' wide and used 2,040 sq feet of 10oz fabric.

EQUIPMENT	HOURS	EQUIPMENT	HOURS
John deer skid steer	10		
Bobcat skid steer	4		

LABOR

NAME	OCCUPATION	START TIME:	STOP TIME:	HOURS
Randy crew	Foreman 4 guys	12:30	4:30	16
Jason	Safety	8:30	4:30	8
Bryan M		12:30	4:30	4
Chuck	Operator	6:30	4:30	10
Siberton fence	4 guys	9:00	4:30	30
Brown's concrete	2 guys	8:30	4:00	15
			Total Crew Hours for Today:	83
			Total Crew Hours Cumulative:	12,009

Details of Hauling/ Weight ticket # and tons

TRUCK	WEIGHT TICKET # / TONS	LOAD COUNT	ORIGIN	DESTINATION
Teague hauling	1 truck	1 load	Vulcan	Area C&D (base)

Weather Report

Mostly sunny. High 72. Low 56

Randy Goodwin

Solutia OU-3 Remediation Action

Construction Daily Work Report

Day # _____

Project Number/Name:	OU-3
Safety Meeting Topic:	Electrical safety
Date:	12/16/15 Wednesday

Activities/ Deliveries

Specific task working and or accomplished today:
22 loads of screened material hauled to PCB cell. Screened dirt to stock pile.

EQUIPMENT	HOURS	EQUIPMENT	HOURS
Rock Truck	10	Screen	10
270 track hoe	10	Rock truck	10
200 track hoe	10	Loader	10
228 track hoe	10	D61 dozed	10

LABOR

NAME	OCCUPATION	START TIME:	STOP TIME:	HOURS
Tyler Hollis	Forman	6:30	4:30	10
Jonathan Tenney	Labor	6:30	4:30	10
Statlin Ponder	Labor	6:30	4:30	10
Ethan Howle	Labor	6:30	4:30	10
Frank Hollis	Labor	6:30	4:30	10
Matt Owen	Forman	6:30	4:30	10
			Total Crew Hours for Today:	60
			Total Crew Hours Cumulative:	5083.5

Details of Hauling/ Weight ticket # and tons

TRUCK	WEIGHT TICKET # / TONS	LOAD COUNT	ORIGIN	DESTINATION
TC truck	Class 1	2	Vulcan	Borrow pit entrance ditch
TC truck				
TC truck				
Jerry truck				
Jerry truck				
Jerry truck				
Jerry truck				
Jerry truck				

Weather Report

Solutia OU-3 Remediation Action

Construction Daily Work Report

Day # 133

Project Number/Name:	OU-3
Safety Meeting Topic:	OSHA 10 most causing accidents on job site
Date:	12-17-15. Thursday

Activities/ Deliveries Tray system for ground water

Specific task working and or accomplished today:

AREA E:Acker electric pulled wires in conduit for light poles. AREA A: siberton fence continued hanging fence on very north side of area a. AREA C&D: put riprap berm around geocells on north and south side and east side 668' long x 12' wide and used 10,020 sq feet of 10 oz fabric.Unloaded tray system for the ground water.Stocked piled 9 loads of base for when we finish the geocells

EQUIPMENT	HOURS	EQUIPMENT	HOURS
250 loader	8		
John deer skid steer	10		

LABOR

NAME	OCCUPATION	START TIME:	STOP TIME:	HOURS
Randy crew	Foreman 4 guys	6:30	4:30	40
Jason	Safety	6:30	4:30	10
Bryan M		6:30	4:30	10
Chuck	Operator	6:30	4:30	10
Brown's concrete		0:00		
Siberton fence	4 guys	9:30	4:30	28
Acker electric	3 guys	12:30	4:00	10.5
			Total Crew Hours for Today:	108.5
			Total Crew Hours Cumulative:	12,117.50

Details of Hauling/ Weight ticket # and tons

TRUCK	WEIGHT TICKET # / TONS	LOAD COUNT	ORIGIN	DESTINATION
Teague hauling	1 truck	9 loads	Vulcan	Area C&D (base)
Taylor dump trucks	3 trucks	8 loads	Vulcan	Area C&D (riprap)

Weather Report

Overcast. High 61. Low 34

Solutia OU-3 Remediation Action

Construction Daily Work Report

Day # _____

Project Number/Name:	OU-3
Safety Meeting Topic:	Electrical safety
Date:	12/17/15 Thursday

Activities/ Deliveries

Specific task working and or accomplished today:
Worked in area C&D putting fabric down for rip rap. Worked on the south slope of the borrow pit.

EQUIPMENT	HOURS	EQUIPMENT	HOURS
Rock Truck		Screen	
270 track hoe	5	Rock truck	
200 track hoe		Loader	10
228 track hoe	5	D61 dozed	5

LABOR

NAME	OCCUPATION	START TIME:	STOP TIME:	HOURS
Tyler Hollis	Forman	6:30	4:30	10
Jonathan Tenney	Labor	6:30	4:30	10
Statlin Ponder	Labor	7:00	4:30	9.5
Ethan Howle	Labor	6:30	4:30	10
Frank Hollis	Labor	6:30	4:30	10
Matt Owen	Forman	6:30	4:30	10
			Total Crew Hours for Today:	59.5
			Total Crew Hours Cumulative:	5143

Details of Hauling/ Weight ticket # and tons

TRUCK	WEIGHT TICKET # / TONS	LOAD COUNT	ORIGIN	DESTINATION
TC truck				
TC truck				
TC truck				
Jerry truck				
Jerry truck				
Jerry truck				
Jerry truck				
Jerry truck				

Weather Report

Solutia OU-3 Remediation Action

Construction Daily Work Report

Day # 134

Project Number/Name:	OU-3
Safety Meeting Topic:	Secure up equipment
Date:	12-18-15. Friday

Activities/ Deliveries

Specific task working and or accomplished today:

AREA E: Acker electric relocated one light pole to new location. AREA C&D:installed 137' long x 12' wide of the riprap berm on the south and east side used 2,055 sq feet of 10 oz fabric.Stocked piled base. AREA A:siberton fence continued installing fence on the very north side of area a.

EQUIPMENT	HOURS	EQUIPMENT	HOURS
John deer kid steer	10		

LABOR

NAME	OCCUPATION	START TIME:	STOP TIME:	HOURS
Jason	Safety	8:30	11:00	2.5
Chuck	Operator	6:30	4:30	10
Brown's concrete		0:00		
Acker electric	2 guys	8:30	4:00	15
Siberton fence	4 guys	9:30	4:30	28
			Total Crew Hours for Today:	55.5
			Total Crew Hours Cumulative:	12,173

Details of Hauling/ Weight ticket # and tons

TRUCK	WEIGHT TICKET # / TONS	LOAD COUNT	ORIGIN	DESTINATION
Benchmark trucking	2 trucks	6 loads	Vulcan	Area C&D (riprap)
Teague hauling	1 truck	6 loads	Vulcan	Area C&D (base)

Weather Report

Sunny. High 51. Low 28

Solutia OU-3 Remediation Action

Construction Daily Work Report

Day # 5

Project Number/Name:	OU-3 ground water
Safety Meeting Topic:	
Date:	12-18-15. Friday

Activities/ Deliveries

Specific task working and or accomplished today:

GROUND WATER: removed 240' of old pipe trays and installed 240' of new pipe trays.

EQUIPMENT	HOURS	EQUIPMENT	HOURS

LABOR

NAME	OCCUPATION	START TIME:	STOP TIME:	HOURS
Randy crew	Foreman	6:30	4:30	10
Jason	Safety	6:30	8:30	2
Bryan M		6:30	4:30	10
Deon		6:30	4:30	10
Chris		6:30	4:30	10
Kevin		6:30	4:30	10
			Total Crew Hours for Today:	52
			Total Crew Hours Cumulative:	198

Details of Hauling/ Weight ticket # and tons

TRUCK	WEIGHT TICKET # / TONS	LOAD COUNT	ORIGIN	DESTINATION

Weather Report

Solutia OU-3 Remediation Action

Construction Daily Work Report

Day # _____

Project Number/Name:	OU-3
Safety Meeting Topic:	Electrical safety
Date:	12/18/15 Friday

Activities/ Deliveries

Specific task working and or accomplished today:
Screened and stock piled the screened material.

EQUIPMENT	HOURS	EQUIPMENT	HOURS
Rock Truck		Screen	8
270 track hoe	8	Rock truck	
200 track hoe		Loader	8
228 track hoe	8	D61 dozed	2

LABOR

NAME	OCCUPATION	START TIME:	STOP TIME:	HOURS
Tyler Hollis	Forman	6:30	4:00	9.5
Jonathan Tenney	Labor	6:30	4:00	9.5
Statlin Ponder	Labor	7:00	4:00	9.5
Ethan Howle	Labor	6:30	4:00	9.5
Frank Hollis	Labor	6:30	4:00	9.5
Matt Owen	Forman	6:30	4:00	9.5
			Total Crew Hours for Today:	57
			Total Crew Hours Cumulative:	5200

Details of Hauling/ Weight ticket # and tons

TRUCK	WEIGHT TICKET # / TONS	LOAD COUNT	ORIGIN	DESTINATION
TC truck				
TC truck				
TC truck				
Jerry truck				
Jerry truck				
Jerry truck				
Jerry truck				
Jerry truck				

Weather Report

Solutia OU-3 Remediation Action

Construction Daily Work Report

Day # 135

Project Number/Name:	OU-3
Safety Meeting Topic:	Ppe
Date:	12-19-15. Saturday

Activities/ Deliveries

Specific task working and or accomplished today:

AREA A: siberton fence worked on fence and installed 2 new gates on the very north side of area a.

EQUIPMENT	HOURS	EQUIPMENT	HOURS

LABOR

NAME	OCCUPATION	START TIME:	STOP TIME:	HOURS
Siberton fence	3 guys	10:30	3:00	13.5
Jason	Safety	6:30	2:30	8
			Total Crew Hours for Today:	21.5
			Total Crew Hours Cumulative:	12,194.50

Details of Hauling/ Weight ticket # and tons

TRUCK	WEIGHT TICKET # / TONS	LOAD COUNT	ORIGIN	DESTINATION

Weather Report

Sunny. High 53. Low 30

Randy Hoehn

Solutia OU-3 Remediation Action

Construction Daily Work Report

Day # 6

Project Number/Name:	OU-3. Ground water
Safety Meeting Topic:	Ppe
Date:	12-19-15. Saturday

Activities/ Deliveries

Specific task working and or accomplished today:

GROUND WATER:installed 192' of the pipe tray system and removed 192' of the old tray went back started putting in the grounding cables on the tray.

EQUIPMENT	HOURS	EQUIPMENT	HOURS

LABOR

NAME	OCCUPATION	START TIME:	STOP TIME:	HOURS
Randy crew	Foreman	6:30	3:00	8.5
Jason	Safety	2:30	3:00	0.5
Deon		6:30	3:00	8.5
Chris		6:30	3:00	8.5
Kevin		6:30	3:00	8.5
Bryan		6:30	3:00	8.5
			Total Crew Hours for Today:	43
			Total Crew Hours Cumulative:	241

Details of Hauling/ Weight ticket # and tons

TRUCK	WEIGHT TICKET # / TONS	LOAD COUNT	ORIGIN	DESTINATION

Weather Report

Sunny. High 55. Low 29

Solutia OU-3 Remediation Action

Construction Daily Work Report

Day # _____

Project Number/Name:	OU-3
Safety Meeting Topic:	Electrical safety
Date:	12/19/15 Saturday

Activities/ Deliveries

Specific task working and or accomplished today:
Screened and stock piled the screened material. 45 loads of screened material hauled to pcb cell.

EQUIPMENT	HOURS	EQUIPMENT	HOURS
Rock Truck	9	Screen	9
270 track hoe	9	Rock truck	9
200 track hoe	9	Loader	9
228 track hoe		D61 dozed	9

LABOR

NAME	OCCUPATION	START TIME:	STOP TIME:	HOURS
Tyler Hollis	Forman	6:30	4:00	9.5
Jonathan Tenney	Labor	6:30	4:00	9.5
Statlin Ponder	Labor	7:00	4:00	9.5
Ethan Howle	Labor	6:30	4:00	9.5
Frank Hollis	Labor	6:30	4:00	9.5
Matt Owen	Forman	6:30	4:00	9.5
			Total Crew Hours for Today:	57
			Total Crew Hours Cumulative:	5257

Details of Hauling/ Weight ticket # and tons

TRUCK	WEIGHT TICKET # / TONS	LOAD COUNT	ORIGIN	DESTINATION
TC truck				
TC truck				
TC truck				
Jerry truck				
Jerry truck				
Jerry truck				
Jerry truck				
Jerry truck				

Weather Report

Solutia OU-3 Remediation Action

Construction Daily Work Report

Day # 136

Project Number/Name:	OU-3
Safety Meeting Topic:	Over head drilling
Date:	12-21-15. Monday

Activities/ Deliveries

Specific task working and or accomplished today:

AREA E:Acker electric moved the 2nd light pole to new location. AREA A:siberton fence finish up the fence on the very north of area a. AREA C&D:Tyler's crew and two temp workers started back on the geocells after lunch.Started push the base and backfilling them

EQUIPMENT	HOURS	EQUIPMENT	HOURS
John deer skid steer	10		
31 dozer	4		

LABOR

NAME	OCCUPATION	START TIME:	STOP TIME:	HOURS
Siberton fence	2 guys	9:30	11:30	4
Jason	Safety	6:30	3:30	9
Acker electric	3 guys	8:00	1:00	15
Chuck	Operator	6:30	5:00	10.5
D'Andre Bonds	Temp worker	11:30	4:30	5
Reginald Boyd	Temp worker	11:30	4:30	5
Turner survey	3 guys	10:00	4:30	19.5
			Total Crew Hours for Today:	68
			Total Crew Hours Cumulative:	12,262.50

Details of Hauling/ Weight ticket # and tons

TRUCK	WEIGHT TICKET # / TONS	LOAD COUNT	ORIGIN	DESTINATION

Weather Report

Rain showers. High 64. Low 56

Randy Goodwin

Solutia OU-3 Remediation Action

Construction Daily Work Report

Day # 7

Project Number/Name:	OU-3. Ground water
Safety Meeting Topic:	Over head grilling
Date:	12-21-15. Monday

Activities/ Deliveries

Specific task working and or accomplished today:

GROUND WATER:installed 264'of pipe trays and removed 264' of old tray

EQUIPMENT	HOURS	EQUIPMENT	HOURS

LABOR

NAME	OCCUPATION	START TIME:	STOP TIME:	HOURS
Randy crew	Foreman	6:30	4:30	10
Jason	Safety	3:30	4:30	1
Deon		6:30	4:30	10
Kevin		6:30	4:30	10
Chris		6:30	4:30	10
Bryan		6:30	4:30	10
Reginald Boyd	Temp worker	6:30	11:30	5
D'Andre Bonds	Temp worker	6:30	11:30	5
			Total Crew Hours for Today:	61
			Total Crew Hours Cumulative:	302

Details of Hauling/ Weight ticket # and tons

TRUCK	WEIGHT TICKET # / TONS	LOAD COUNT	ORIGIN	DESTINATION

Weather Report

Rain showers. High 60. Low 48

Randy Goodwin

Solutia OU-3 Remediation Action

Construction Daily Work Report

Day # _____

Project Number/Name:	OU-3
Safety Meeting Topic:	Over head drilling
Date:	12/21/15 Monday

Activities/ Deliveries

Specific task working and or accomplished today:

Screened and stock piled the screened material. 24 loads of screened material hauled to pcb cell. Haul roads got to slick to haul. Worked in area C&D put down 8976 sq ft of geo cell.

EQUIPMENT	HOURS	EQUIPMENT	HOURS
Rock Truck	5	Screen	5
270 track hoe	5	Rock truck	5
200 track hoe	5	Loader	5
228 track hoe		D61 dozed	5

LABOR

NAME	OCCUPATION	START TIME:	STOP TIME:	HOURS
Tyler Hollis	Forman	6:30	5:00	10.5
Jonathan Tenney	Labor	6:30	5:00	10.5
Statlin Ponder	Labor	7:00	5:00	10.5
Ethan Howle	Labor	6:30	5:00	10.5
Frank Hollis	Labor	6:30	5:00	10.5
Matt Owen	Forman	6:30	12:00	5.5
			Total Crew Hours for Today:	58
			Total Crew Hours Cumulative:	5315

Details of Hauling/ Weight ticket # and tons

TRUCK	WEIGHT TICKET # / TONS	LOAD COUNT	ORIGIN	DESTINATION
TC truck				
TC truck				
TC truck				
Jerry truck				
Jerry truck				
Jerry truck				
Jerry truck				
Jerry truck				

Weather Report

Rained off and on most of the day.

Solutia OU-3 Remediation Action

Construction Daily Work Report

Day # 137

Project Number/Name:	OU-3
Safety Meeting Topic:	Be safe
Date:	12-22-15. Tuesday

Activities/ Deliveries

Specific task working and or accomplished today:
AREA C&D:Tyler's crew finished up with the geocell and got backfilled with base,put in 34'long x 12'wide riprap berm and used 510 sq feet of 10 oz fabric

EQUIPMENT	HOURS	EQUIPMENT	HOURS
John deer skid steer	5		
31 dozer	5		

LABOR

NAME	OCCUPATION	START TIME:	STOP TIME:	HOURS
Jason	Safety	7:30	4:00	8.5
Chuck	Operator	6:30	4:00	9.5
			Total Crew Hours for Today:	18
			Total Crew Hours Cumulative:	12,280.50

Details of Hauling/ Weight ticket # and tons

TRUCK	WEIGHT TICKET # / TONS	LOAD COUNT	ORIGIN	DESTINATION
Taylor dump truck	16735543/24.43 tons	1	Vulcan	Area C&D base backfill cells
Taylor dump truck	16735531/23.60 tons	2	Vulcan	Area C&D base backfill cells

Weather Report

Showers and thunderstorms. High 71. Low 60

Solutia OU-3 Remediation Action

Construction Daily Work Report

Day # 8

Project Number/Name:	OU-3. Ground water
Safety Meeting Topic:	Be safe
Date:	12-22-15. Tuesday

Activities/ Deliveries

Specific task working and or accomplished today:

GROUND WATER:put in 216' of the new pipe tray's and removed 216' of old tray's

EQUIPMENT	HOURS	EQUIPMENT	HOURS

LABOR

NAME	OCCUPATION	START TIME:	STOP TIME:	HOURS
Randy	Foreman	6:30	4:00	9.5
Deon		6:30	4:00	9.5
Kevin		6:30	4:00	9.5
Chris		6:30	4:00	9.5
Bryan		6:30	4:00	9.5
Jason	Safety	6:30	7:30	1
			Total Crew Hours for Today:	48.5
			Total Crew Hours Cumulative:	350.5

Details of Hauling/ Weight ticket # and tons

TRUCK	WEIGHT TICKET # / TONS	LOAD COUNT	ORIGIN	DESTINATION

Weather Report

Showers and thunderstorms. High 71. Low 60

Solutia OU-3 Remediation Action

Construction Daily Work Report

Day # 138

Project Number/Name:	OU-3
Safety Meeting Topic:	Check equipment
Date:	1-4-16. Monday

Activities/ Deliveries

Specific task working and or accomplished today:

AREA C&D: REPAIRED,section of the geocell that the base had wash off 1-load of base,started back on the riprap berm around the cells.61' x 12' wide used 915 sq feet of 10 oz fabric,add riprap over smaller riprap 41' on the east side where water ponds up

EQUIPMENT	HOURS	EQUIPMENT	HOURS
John deer skid steer	10		

LABOR

NAME	OCCUPATION	START TIME:	STOP TIME:	HOURS
Randy crew	Foreman 5 guys	6:30	11:30	25
Jason	Safety	6:30	3:30	9
Chuck	Operator	6:30	4:30	10
			Total Crew Hours for Today:	44
			Total Crew Hours Cumulative:	12,324.50

Details of Hauling/ Weight ticket # and tons

TRUCK	WEIGHT TICKET # / TONS	LOAD COUNT	ORIGIN	DESTINATION

Weather Report

Sunny. High 44. Low 25

Randy Goodwin

Solutia OU-3 Remediation Action

Construction Daily Work Report

Day # 9

Project Number/Name:	OU-3. Ground water
Safety Meeting Topic:	Equipment
Date:	1-4-16. Monday

Activities/ Deliveries 6 pipe trays,90,tee

Specific task working and or accomplished today:

GROUND WATER: removed 31' of old pipe tray and installed 31' of new tray and the 90 bend on the north west side. Loaded up old trays and wood moved to top of the hill
Mobilization: moved in a man lift the get the part down in the ditch.

EQUIPMENT	HOURS	EQUIPMENT	HOURS

LABOR

NAME	OCCUPATION	START TIME:	STOP TIME:	HOURS
Randy crew	Foreman 5 guys	11:30	4:30	25
Jason	Safety	3:30	4:30	1
			Total Crew Hours for Today:	26
			Total Crew Hours Cumulative:	376.5

Details of Hauling/ Weight ticket # and tons

TRUCK	WEIGHT TICKET # / TONS	LOAD COUNT	ORIGIN	DESTINATION

Weather Report

Randy Goodwin

Solutia OU-3 Remediation Action

Construction Daily Work Report

Day # _____

Project Number/Name:	OU-3
Safety Meeting Topic:	Equipment maintenance
Date:	1/4/15 Monday

Activities/ Deliveries

Specific task working and or accomplished today:

PCB CELL: put down 32 loads of 4 ml poly over the liner (64000 sq ft.) BORROW PIT: cleaned out sediment basin.

EQUIPMENT	HOURS	EQUIPMENT	HOURS
Rock Truck	4	Screen	
270 track hoe	4	Rock truck	
200 track hoe		Loader	8
228 track hoe		D61 dozed	4

LABOR

NAME	OCCUPATION	START TIME:	STOP TIME:	HOURS
Tyler Hollis	Forman	6:30	4:00	9.5
Jonathan Tenney	Labor	6:30	4:00	9.5
Statlin Ponder	Labor	7:00	4:00	9.5
Ethan Howle	Labor	6:30	4:00	9.5
Frank Hollis	Labor	6:30	4:00	9.5
Matt Owen	Forman	6:30	4:00	9.5
2 temp workers	Labor	7:30	4:00	17
			Total Crew Hours for Today:	74
			Total Crew Hours Cumulative:	5449

Details of Hauling/ Weight ticket # and tons

TRUCK	WEIGHT TICKET # / TONS	LOAD COUNT	ORIGIN	DESTINATION
TC truck				
TC truck				
TC truck				
Jerry truck				
Jerry truck				
Jerry truck				
Jerry truck				
Jerry truck				

Weather Report

Cold, Sunny, Windy.



Solutia OU-3 Remediation Action

Construction Daily Work Report

Day # 139

Project Number/Name:	OU-3
Safety Meeting Topic:	Winter construction hazards
Date:	1-5-16. Tuesday

Activities/ Deliveries

Specific task working and or accomplished today:

AREA C&D:done 118' of riprap ditch around geocells used 1,770 sq feet of 10oz fabric,started taking out decon pad. AREA E:Layed out the wall where we got to add too the footer.

EQUIPMENT	HOURS	EQUIPMENT	HOURS
John deer skid steer	10		

LABOR

NAME	OCCUPATION	START TIME:	STOP TIME:	HOURS
Randy crew	Foreman 5 guys	4:00	5:00	5
Jason	Safety	7:30	4:30	9
Chuck	Operator	6:30	4:30	10
Brown's concrete	4 guys	7:30	4:00	34
			Total Crew Hours for Today:	58
			Total Crew Hours Cumulative:	12,382.50

Details of Hauling/ Weight ticket # and tons

TRUCK	WEIGHT TICKET # / TONS	LOAD COUNT	ORIGIN	DESTINATION
Teague hauling	16735691/24.07 tons	1	Vulcan	Area C&D/area a

Weather Report

Sunny. High 47. Low 25

Solutia OU-3 Remediation Action

Construction Daily Work Report

Day # 10

Project Number/Name:	OU-3 ground water
Safety Meeting Topic:	
Date:	1-5-16. Tuesday

Activities/ Deliveries

Specific task working and or accomplished today:

GROUNG WATER:finished up pipe trays on north side heading back west to electric panel 80' and put in one tray tee.Cleaned up old trays hauled to top of the hill

EQUIPMENT	HOURS	EQUIPMENT	HOURS

LABOR

NAME	OCCUPATION	START TIME:	STOP TIME:	HOURS
Randy crew	Foreman 5 guys	6:30	4:00	47.5
Jason	Safety	6:30	7:30	1
			Total Crew Hours for Today:	48.5
			Total Crew Hours Cumulative:	425

Details of Hauling/ Weight ticket # and tons

TRUCK	WEIGHT TICKET # / TONS	LOAD COUNT	ORIGIN	DESTINATION

Weather Report

TAYLOR CORPORATION Construction Daily Work Report

Project Number/Name:	OU-3
Foreman:	Tyler Hollis
Date:	1/5/16 Tuesday

Description of Work Being Done Today:

Hauled in 15 loads of tope soil to the PCB cell. Spread tope soil in between the haul roads.

Put down 8 rolls of poly on tope of the liner. (16000 sq ft)

EQUIPMENT	HOURS	EQUIPMENT	HOURS
D-61	8		
270 track hoe	8		
Volvo truck	8		
31 dozer	8		
Volvo truck	8		
Loader	8		

LABOR:

NAME	OCCUPATION	START TIME:	STOP TIME:
Tyler Hollis	foreman	6:30	5:00
Jonathan Tenney	Laborer	6:30	5:00
Statlin Ponder	laborer	6:30	5:00
Ethan Howle	Labor	6:30	5:00
Frank Hollis	Labor	6:30	5:00
Matt Owen	Forman	6:30	5:00

Weather Reports:

Solutia OU-3 Remediation Action

Construction Daily Work Report

Day # 140

Project Number/Name:	OU-3
Safety Meeting Topic:	Workplace harassment
Date:	1-6-15. Wednesday

Activities/ Deliveries

Specific task working and or accomplished today:

AREA C&D:finished removing decon pad,graded swale ditch east side of C&D where it was holding water,added base on top of geocells on the east side where the water ran over. AREA E:Browns continued forming wall around control room and tieing rebar,Taylor backfilled in front of footer with base to top of footer for new concrete pad on top of the footer and started drilling dial bar holes into footer drilled 63 holes.

EQUIPMENT	HOURS	EQUIPMENT	HOURS
John deer skid steer	10		
78 mini hie	6		

LABOR

NAME	OCCUPATION	START TIME:	STOP TIME:	HOURS
Randy crew	Foreman 5 guys	6:30	4:30	50
Jason	Safety	6:30	4:30	10
Browns concrete	5 guys	7:30	4:30	45
			Total Crew Hours for Today:	105
			Total Crew Hours Cumulative:	12,487.50

Details of Hauling/ Weight ticket # and tons

TRUCK	WEIGHT TICKET # / TONS	LOAD COUNT	ORIGIN	DESTINATION
Taylor dump truck	16337886/22.66 tons	1	Vulcan	C&D riprap berm

Weather Report

Partly cloudy. High 52. Low 34

Solutia OU-3 Remediation Action

Construction Daily Work Report

Day # _____

Project Number/Name:	OU-3
Safety Meeting Topic:	Work place harassment
Date:	1/6/16 Wednesday

Activities/ Deliveries

Specific task working and or accomplished today:

PCB CELL: Hauled in 36 loads of tope soil to the PCB cell. Hauled in 10 loads of screened material to the PCB cell.

EQUIPMENT	HOURS	EQUIPMENT	HOURS
Rock Truck	8	Screen	8
270 track hoe	8	Rock truck	8
200 track hoe	8	Loader	8
31 dozer	10	D61 dozed	10

LABOR

NAME	OCCUPATION	START TIME:	STOP TIME:	HOURS
Tyler Hollis	Forman	6:30	5:00	10.5
Jonathan Tenney	Labor	6:30	5:00	10.5
Statlin Ponder	Labor	6:30	5:00	10.5
Ethan Howle	Labor	6:30	5:00	10.5
Frank Hollis	Labor	6:30	5:00	10.5
Matt Owen	Forman	6:30	4:30	10
Chuck	Operator	6:30	4:30	10
			Total Crew Hours for Today:	72.5
			Total Crew Hours Cumulative:	5584.5

Details of Hauling/ Weight ticket # and tons

TRUCK	WEIGHT TICKET # / TONS	LOAD COUNT	ORIGIN	DESTINATION
TC truck				
TC truck				
TC truck				
Jerry truck				
Jerry truck				
Jerry truck				
Jerry truck				
Jerry truck				

Weather Report

Rained off and on most of the day.

Solutia OU-3 Remediation Action

Construction Daily Work Report

Day # 141

Project Number/Name:	OU-3
Safety Meeting Topic:	Ppe
Date:	1-7-16. Thursday

Activities/ Deliveries

Specific task working and or accomplished today:

AREA E:finished drilling hole for the new footer expansion 37 holes,finished grade for the footer removing dirt and add base and tamped in,deconed bucket on the 78 minihoe and John deer skid steer,cleaned off asphalt going into area e where gravel was on it.Browns concrete worked on forming and tie rebar for wall around control room for half day. AREA C&D:covered up few spots of geocells that were showing on the new entrance road going in.

EQUIPMENT	HOURS	EQUIPMENT	HOURS
John deer skid steer	10		
78 mini home	7		

LABOR

NAME	OCCUPATION	START TIME:	STOP TIME:	HOURS
Randy crew	Foreman 5 guys	6:30	4:30	50
Jason	Safety	6:30	4:30	10
Browns concrete	5 guys	7:30	12:30	25
			Total Crew Hours for Today:	85
			Total Crew Hours Cumulative:	12,572.50

Details of Hauling/ Weight ticket # and tons

TRUCK	WEIGHT TICKET # / TONS	LOAD COUNT	ORIGIN	DESTINATION
Taylor dump truck	16735818/22.17 tons	1	Vulcan	C&D geocells repair

Weather Report

Cloudy. High 59. Low 46.

Solutia OU-3 Remediation Action

Construction Daily Work Report

Day # _____

Project Number/Name:	OU-3
Safety Meeting Topic:	Work place harassment
Date:	1/7/16 Thursday

Activities/ Deliveries

Specific task working and or accomplished today:

PCB CELL: Hauled in 25 loads of tope soil to stock pile at PCB cell. Finished the tope soil in between the two haul roads. Bushed the eastern haul road east into fill. 4 loads of class 1 rip rap hauled in and stock piled at the PCB cell. Worked on the 4 ml poly over the tope of the liner. Worked on the screen.

EQUIPMENT	HOURS	EQUIPMENT	HOURS
Rock Truck		Screen	
270 track hoe		Rock truck	
200 track hoe		Loader	
31 dozer	10	D61 dozed	10

LABOR

NAME	OCCUPATION	START TIME:	STOP TIME:	HOURS
Tyler Hollis	Forman	6:30	5:00	10.5
Jonathan Tenney	Labor	6:30	5:00	10.5
Statlin Ponder	Labor	6:30	5:00	10.5
Ethan Howle	Labor	6:30	11:00	4.5
Frank Hollis	Labor	6:30	5:00	10.5
Matt Owen	Forman	6:30	4:30	10
Chuck	Operator	6:30	4:30	10
4 temps	Labor	6:30	5:00	42
			Total Crew Hours for Today:	108.5
			Total Crew Hours Cumulative:	5693

Details of Hauling/ Weight ticket # and tons

TRUCK	WEIGHT TICKET # / TONS	LOAD COUNT	ORIGIN	DESTINATION
TC truck	Class 1	4	Vulcan	PCB cell
TC truck				
TC truck				
Jerry truck				
Jerry truck				
Jerry truck				
Jerry truck				
Jerry truck				

Weather Report

Rained off and on most of the day.

Solutia OU-3 Remediation Action

Construction Daily Work Report

Day # 142

Project Number/Name:	OU-3
Safety Meeting Topic:	Equipment horse play
Date:	1-8-16. Friday

Activities/ Deliveries

Specific task working and or accomplished today:

AREA E: blew out the hole we drilled for the new footer and epoxy 100 bent rebar in the holes,Browns concrete worked on finishing up with the wall forming and tieing steel around the control room.

EQUIPMENT	HOURS	EQUIPMENT	HOURS

LABOR

NAME	OCCUPATION	START TIME:	STOP TIME:	HOURS
Randy		2:30	4:30	2
Jason	Safety	6:30	3:30	9
Browns concrete	5 guys	7:30	4:00	42.5
Kevin		1:30	4:30	3
Bryan		1:30	4:30	3
			Total Crew Hours for Today:	59.5
			Total Crew Hours Cumulative:	12,632

Details of Hauling/ Weight ticket # and tons

TRUCK	WEIGHT TICKET # / TONS	LOAD COUNT	ORIGIN	DESTINATION

Weather Report

Cloudy. High 62. Low 49

Solutia OU-3 Remediation Action

Construction Daily Work Report

Day # 11

Project Number/Name:	OU-3 ground water
Safety Meeting Topic:	
Date:	1-8-16. Friday

Activities/ Deliveries

Specific task working and or accomplished today:

GROUND WATER:drilled holes in the plates for the I bolts or the tray system,then started putting on the pipe.

EQUIPMENT	HOURS	EQUIPMENT	HOURS

LABOR

NAME	OCCUPATION	START TIME:	STOP TIME:	HOURS
Randy		6:30	2:30	8
Jason	Safety	6:30	3:30	9
Deon		6:30	4:30	10
Chris		6:30	4:30	10
Kevin		6:30	1:30	7
Bryan		6:30	1:30	7
			Total Crew Hours for Today:	51
			Total Crew Hours Cumulative:	476

Details of Hauling/ Weight ticket # and tons

TRUCK	WEIGHT TICKET # / TONS	LOAD COUNT	ORIGIN	DESTINATION

Weather Report

Solutia OU-3 Remediation Action

Construction Daily Work Report

Day # _____

Project Number/Name:	OU-3
Safety Meeting Topic:	Equipment maintenance
Date:	1/8/16 Friday

Activities/ Deliveries

Specific task working and or accomplished today:
24 loads of screened material hauled to PCB cell. 25 rolls of poly (50000sq ft) put down on tope of the liner. 11 loads of class 1 hauled to stock pile at PCB cell.

EQUIPMENT	HOURS	EQUIPMENT	HOURS
Rock Truck	8	Screen	8
270 track hoe	8	Rock truck	8
200 track hoe	8	Loader	8
31 dozer	10	D61 dozed	10

LABOR

NAME	OCCUPATION	START TIME:	STOP TIME:	HOURS
Tyler Hollis	Forman	6:30	4:30	10
Jonathan Tenney	Labor	6:30	4:30	10
Statlin Ponder	Labor	6:30	4:30	10
Ethan Howle	Labor	6:30	4:30	10
Frank Hollis	Labor	6:30	4:30	10
Matt Owen	Forman	6:30	4:30	10
Chuck	Operator	6:30	4:30	10
4 temps	Labor	6:30	4:30	40
			Total Crew Hours for Today:	110
			Total Crew Hours Cumulative:	5803

Details of Hauling/ Weight ticket # and tons

TRUCK	WEIGHT TICKET # / TONS	LOAD COUNT	ORIGIN	DESTINATION
Teague	Class 1	5	Vulcan	PCB cell
Teague	Class 1	6	Vulcan	PCB cell
TC truck				
Jerry truck				
Jerry truck				
Jerry truck				
Jerry truck				
Jerry truck				

Weather Report

Rained off and on most of the day.

Solutia OU-3 Remediation Action

Construction Daily Work Report

Day # _____

Project Number/Name:	OU-3
Safety Meeting Topic:	Equipment maintenance
Date:	1/9/16 Saturday

Activities/ Deliveries

Specific task working and or accomplished today:
Hauled 20 loads of screened material to PCB cell

EQUIPMENT	HOURS	EQUIPMENT	HOURS
Rock Truck	8	Screen	8
270 track hoe	8	Rock truck	8
200 track hoe	8	Loader	8
31 dozer		D61 dozed	8

LABOR

NAME	OCCUPATION	START TIME:	STOP TIME:	HOURS
Tyler Hollis	Forman			
Jonathan Tenney	Labor	6:30	11:00	4.5
Statlin Ponder	Labor			
Ethan Howle	Labor	6:30	3:00	8.5
Frank Hollis	Labor	6:30	3:00	8.5
Matt Owen	Forman	6:30	3:00	8.5
Chuck	Operator	6:30	3:00	8.5
4 temps	Labor	6:30	11:00	18
			Total Crew Hours for Today:	56.5
			Total Crew Hours Cumulative:	5859.5

Details of Hauling/ Weight ticket # and tons

TRUCK	WEIGHT TICKET # / TONS	LOAD COUNT	ORIGIN	DESTINATION
Teague	Class 1	5	Vulcan	PCB cell
Teague	Class 1	6	Vulcan	PCB cell
TC truck				
Jerry truck				
Jerry truck				
Jerry truck				
Jerry truck				
Jerry truck				

Weather Report

Rained off and on most of the day.

Solutia OU-3 Remediation Action

Construction Daily Work Report

Day # 143

Project Number/Name:	OU-3
Safety Meeting Topic:	Buried utilities
Date:	1-11-16. Monday

Activities/ Deliveries

Specific task working and or accomplished today:

AREA E:we pulled the electric conduit up that was under the base so it wouldn't be poured under the new added footer,Browns concrete continued working on the wall around the control room and started forming on the new footer.

EQUIPMENT	HOURS	EQUIPMENT	HOURS

LABOR

NAME	OCCUPATION	START TIME:	STOP TIME:	HOURS
Randy crew	Foreman 4 guys	6:30	7:30	4
Jason	Safety	6:30	3:30	9
Browns concrete	6 guys	7:30	4:00	51
Bryan		6:30	4:30	10
			Total Crew Hours for Today:	74
			Total Crew Hours Cumulative:	12,706

Details of Hauling/ Weight ticket # and tons

TRUCK	WEIGHT TICKET # / TONS	LOAD COUNT	ORIGIN	DESTINATION

Weather Report

Cloudy. High 45. Low 27

Randy Crabtree

Solutia OU-3 Remediation Action

Construction Daily Work Report

Day # 12

Project Number/Name:	OU-3 ground water
Safety Meeting Topic:	
Date:	1-11-16. Monday

Activities/ Deliveries

Specific task working and or accomplished today:

GROUND WATER:continued working on the u bolts to hold poly pipe on the new later trays.

EQUIPMENT	HOURS	EQUIPMENT	HOURS

LABOR

NAME	OCCUPATION	START TIME:	STOP TIME:	HOURS
Randy crew	Foreman	7:30	4:30	9
Jason	Safety	3:30	4:30	1
Deon		7:30	4:30	9
Chris		7:30	4:30	9
Kevin		7:30	4:30	9
			Total Crew Hours for Today:	37
			Total Crew Hours Cumulative:	513

Details of Hauling/ Weight ticket # and tons

TRUCK	WEIGHT TICKET # / TONS	LOAD COUNT	ORIGIN	DESTINATION

Weather Report

Randy Goodwin

Solutia OU-3 Remediation Action

Construction Daily Work Report

Day # _____

Project Number/Name:	OU-3
Safety Meeting Topic:	Equipment maintenance
Date:	1/11/16 Monday

Activities/ Deliveries

Specific task working and or accomplished today:
Hauled 18 loads of screened material to PCB cell. Started hauling after lunch due to wet haul roads. 1 load of class one hauled in.

EQUIPMENT	HOURS	EQUIPMENT	HOURS
Rock Truck	8	Screen	8
270 track hoe	8	Rock truck	8
200 track hoe	8	Loader	8
31 dozer		D61 dozed	8

LABOR

NAME	OCCUPATION	START TIME:	STOP TIME:	HOURS
Tyler Hollis	Forman	6:30	4:30	10
Jonathan Tenney	Labor	6:30	4:30	10
Statlin Ponder	Labor			
Ethan Howle	Labor			
Frank Hollis	Labor	6:30	4:30	10
Matt Owen	Forman	6:30	4:30	10
Chuck	Operator	6:30	4:30	10
			Total Crew Hours for Today:	50
			Total Crew Hours Cumulative:	5909.5

Details of Hauling/ Weight ticket # and tons

TRUCK	WEIGHT TICKET # / TONS	LOAD COUNT	ORIGIN	DESTINATION
Teague	Class 1	1	Vulcan	PCB cell
Teague				
TC truck				
Jerry truck				
Jerry truck				
Jerry truck				
Jerry truck				
Jerry truck				

Weather Report

Rained off and on most of the day.

Solutia OU-3 Remediation Action

Construction Daily Work Report

Day # 144

Project Number/Name:	OU-3
Safety Meeting Topic:	Watch traffic
Date:	1-12-16. Tuesday

Activities/ Deliveries

Specific task working and or accomplished today:

PCB CELLS: started putting in the armor shield around the cell 118' long x 15' wide then 165' long x 12' wide used 3,750 sq feet of 10 oz fabric. AREA E:Browns concrete poured the footer around control room area and poured the added footer on the north and east side.

EQUIPMENT	HOURS	EQUIPMENT	HOURS
228 track hoe	10		
621f loader	8		

LABOR

NAME	OCCUPATION	START TIME:	STOP TIME:	HOURS
Randy crew	Foreman 5 guys	6:30	4:30	50
Jason	Safety	6:30	4:30	10
Browns concrete	6 guys	7:30	4:00	51
			Total Crew Hours for Today:	111
			Total Crew Hours Cumulative:	12,817

Details of Hauling/ Weight ticket # and tons

TRUCK	WEIGHT TICKET # / TONS	LOAD COUNT	ORIGIN	DESTINATION
Teague hauling	1 truck	6 loads	Vulcan	Pcb cell riprap armor shield

Weather Report

Sunny. High 53. Low 26

Solutia OU-3 Remediation Action

Construction Daily Work Report

Day # _____

Project Number/Name:	OU-3
Safety Meeting Topic:	Equipment maintenance
Date:	1/12/16 Tuesday

Activities/ Deliveries

Specific task working and or accomplished today:
Hauled 9 loads of screened material to PCB cell. Screen went down. Started hauling top soil out of the stock pile to spread on the east side of the cell.

EQUIPMENT	HOURS	EQUIPMENT	HOURS
Rock Truck	10	Screen	10
270 track hoe	10	Rock truck	10
200 track hoe	10	Loader	8
31 dozer	8	D61 dozed	10

LABOR

NAME	OCCUPATION	START TIME:	STOP TIME:	HOURS
Tyler Hollis	Forman	6:30	4:30	10
Jonathan Tenney	Labor	6:30	4:30	10
Statlin Ponder	Labor			
Ethan Howle	Labor			
Frank Hollis	Labor	6:30	4:30	10
Matt Owen	Forman	6:30	4:30	10
Chuck	Operator	6:30	4:30	10
			Total Crew Hours for Today:	50
			Total Crew Hours Cumulative:	5959.5

Details of Hauling/ Weight ticket # and tons

TRUCK	WEIGHT TICKET # / TONS	LOAD COUNT	ORIGIN	DESTINATION
Teague				
Teague				
TC truck				
Jerry truck				
Jerry truck				
Jerry truck				
Jerry truck				
Jerry truck				

Weather Report

Rained off and on most of the day.

Solutia OU-3 Remediation Action

Construction Daily Work Report

Day # 145

Project Number/Name:	OU-3
Safety Meeting Topic:	Ppe
Date:	1-13-16. Wednesday

Activities/ Deliveries

Specific task working and or accomplished today:

PCB CELLS:put in the armor shield on pcb cell 52' long x 15' wide and 279' long x 12' wide used 4,128 sq feet of 10 oz fabric.

EQUIPMENT	HOURS	EQUIPMENT	HOURS
228 track hoe	10		
621f loader	10		

LABOR

NAME	OCCUPATION	START TIME:	STOP TIME:	HOURS
Randy crew	Foreman 5 guys	6:30	4:30	50
Jason	Safety	6:30	4:30	10
Browns concrete		0:00		
			Total Crew Hours for Today:	60
			Total Crew Hours Cumulative:	12,877

Details of Hauling/ Weight ticket # and tons

TRUCK	WEIGHT TICKET # / TONS	LOAD COUNT	ORIGIN	DESTINATION
Teague hauling	1 truck	3 loads	Vulcan	Pcb cell armor shield

Weather Report

Sunny. High 52. Low 32

Randy Goodwin

Solutia OU-3 Remediation Action

Construction Daily Work Report

Day # _____

Project Number/Name:	OU-3
Safety Meeting Topic:	PPE
Date:	1/12/16 Tuesday

Activities/ Deliveries

Specific task working and or accomplished today:
Hauled 19 loads of tope soil in to the PCB cell. Spread tope soil on the east side of the PCB cell.

EQUIPMENT	HOURS	EQUIPMENT	HOURS
Rock Truck	10	Screen	
270 track hoe	10	Rock truck	10
200 track hoe	10	Loader	
31 dozer	10	D61 dozed	10

LABOR

NAME	OCCUPATION	START TIME:	STOP TIME:	HOURS
Tyler Hollis	Forman	6:30	4:30	10
Jonathan Tenney	Labor	6:30	4:30	10
Statlin Ponder	Labor	6:30	4:30	10
Ethan Howle	Labor			
Frank Hollis	Labor	6:30	4:30	10
Matt Owen	Forman	6:30	4:30	10
Chuck	Operator	6:30	4:30	10
			Total Crew Hours for Today:	60
			Total Crew Hours Cumulative:	6019.5

Details of Hauling/ Weight ticket # and tons

TRUCK	WEIGHT TICKET # / TONS	LOAD COUNT	ORIGIN	DESTINATION
Teague				
Teague				
TC truck				
Jerry truck				
Jerry truck				
Jerry truck				
Jerry truck				
Jerry truck				

Weather Report

Rained off and on most of the day.

Solutia OU-3 Remediation Action

Construction Daily Work Report

Day # 146

Project Number/Name:	OU-3
Safety Meeting Topic:	Trenching and shoreing
Date:	1-14-16. Thursday

Activities/ Deliveries

Specific task working and or accomplished today:

PCB CELL: finished up the south side armor shield 115'long x 12' wide used 1,725 sq feet of 10 oz fabric

EQUIPMENT	HOURS	EQUIPMENT	HOURS
228 track hoe	3		
621f loader	3		

LABOR

NAME	OCCUPATION	START TIME:	STOP TIME:	HOURS
Randy crew	Foreman 5 guys	6:30	10:00	17.5
Jason	Safety	6:30	3:30	9
Mile Lilio	Safety	6:30	4:30	10
			Total Crew Hours for Today:	36.5
			Total Crew Hours Cumulative:	12,913.50

Details of Hauling/ Weight ticket # and tons

TRUCK	WEIGHT TICKET # / TONS	LOAD COUNT	ORIGIN	DESTINATION

Weather Report

Sunny. High 62. Low 41

Randy Goodwin

Solutia OU-3 Remediation Action

Construction Daily Work Report

Day # 13

Project Number/Name:	OU-3 ground water
Safety Meeting Topic:	
Date:	1-14-16. Thursday

Activities/ Deliveries

Specific task working and or accomplished today:

GROUND WATER:dug down and stub in 3 2" poly lines fused on all 3 2" 90 coming up inside 4' piece and outside the building 6' piece where the building going and Littleton electric stub in 4 conduits where the building going,got the building pad 10x10 dug down 12" and filled in with 12" of base and tamped in at the wells iw 26 and iw 27

EQUIPMENT	HOURS	EQUIPMENT	HOURS
78 mini hoe	6		
John deer skid steer	6		
Plate tamp	2		

LABOR

NAME	OCCUPATION	START TIME:	STOP TIME:	HOURS
Randy	Foreman	10:00	4:30	6.5
Jason	Safety	3:30	4:30	1
Deon		10:00	4:30	6.5
Chris		10:00	4:30	6.5
Bryan		10:00	4:30	6.5
Kevin		10:00	4:30	6.5
Littleton electric	2 guys	10:00	2:00	8
			Total Crew Hours for Today:	41.5
			Total Crew Hours Cumulative:	554.5

Details of Hauling/ Weight ticket # and tons

TRUCK	WEIGHT TICKET # / TONS	LOAD COUNT	ORIGIN	DESTINATION
Taylor dump truck	16735958/24.28 tons	1	Vulcan	Iw 27 iw 26 g.w.

Weather Report

Randy Goodwin

Solutia OU-3 Remediation Action

Construction Daily Work Report

Day # _____

Project Number/Name:	OU-3
Safety Meeting Topic:	PPE
Date:	1/14/16 Thursday

Activities/ Deliveries

Specific task working and or accomplished today:
Hauled 17 loads of tope soil to stock pile at PCB cell. Screen went down worked on the screen. Geased all the equipment. Fixed the poly on the PCB cell.

EQUIPMENT	HOURS	EQUIPMENT	HOURS
Rock Truck		Screen	1
270 track hoe	1	Rock truck	
200 track hoe		Loader	1
31 dozer		D61 dozed	10

LABOR

NAME	OCCUPATION	START TIME:	STOP TIME:	HOURS
Tyler Hollis	Forman	6:30	4:30	10
Jonathan Tenney	Labor	6:30	4:30	10
Statlin Ponder	Labor	6:30	4:30	10
Ethan Howle	Labor			
Frank Hollis	Labor	6:30	4:30	10
Matt Owen	Forman	6:30	4:30	10
Gary Murphy	Operator	6:30	4:30	10
Joseph Meggs	Labor	6:30	4:30	10
			Total Crew Hours for Today:	70
			Total Crew Hours Cumulative:	6019.5

Details of Hauling/ Weight ticket # and tons

TRUCK	WEIGHT TICKET # / TONS	LOAD COUNT	ORIGIN	DESTINATION
Teague				
Teague				
TC truck				
Jerry truck				
Jerry truck				
Jerry truck				
Jerry truck				
Jerry truck				

Weather Report

Rained off and on most of the day.

Solutia OU-3 Remediation Action

Construction Daily Work Report

Day # 147

Project Number/Name:	OU-3
Safety Meeting Topic:	
Date:	1-15-16. Friday

Activities/ Deliveries

Specific task working and or accomplished today:

EQUIPMENT	HOURS	EQUIPMENT	HOURS

LABOR

NAME	OCCUPATION	START TIME:	STOP TIME:	HOURS
Randy crew	Foreman 5 guys			
Jason	Safety	6:30	1:30	7
Mile Lilio	Safety	6:30	1:30	7
			Total Crew Hours for Today:	14
			Total Crew Hours Cumulative:	12,927.50

Details of Hauling/ Weight ticket # and tons

TRUCK	WEIGHT TICKET # / TONS	LOAD COUNT	ORIGIN	DESTINATION

Weather Report

Rain. High 60. Low 42

Randy Goodwin

Solutia OU-3 Remediation Action

Construction Daily Work Report

Day # 14

Project Number/Name:	OU-3 ground water
Safety Meeting Topic:	
Date:	1-15-16. Friday

Activities/ Deliveries

Specific task working and or accomplished today:

GROUND WATER:got building set with model city crane at iw 26 & iw 27 and got the truck back out

EQUIPMENT	HOURS	EQUIPMENT	HOURS

LABOR

NAME	OCCUPATION	START TIME:	STOP TIME:	HOURS
Randy	Foreman	6:30	12:00	5.5
Deon		6:30	12:00	5.5
Chris		6:30	12:00	5.5
Bryan		6:30	12:00	5.5
Kevin		6:30	12:00	5.5
Mile,Jason		1:30	2:30	2
Model city		8:30	10:00	1.5
			Total Crew Hours for Today:	31
			Total Crew Hours Cumulative:	585.5

Details of Hauling/ Weight ticket # and tons

TRUCK	WEIGHT TICKET # / TONS	LOAD COUNT	ORIGIN	DESTINATION

Weather Report

Rain. High 55. Low 36

Randy Goodwin

Solutia OU-3 Remediation Action

Construction Daily Work Report

Day # _____

Project Number/Name:	OU-3
Safety Meeting Topic:	PPE
Date:	1/15/16 Friday

Activities/ Deliveries

Specific task working and or accomplished today:
Rained most of the day. Took down fence in area A. Fixed belt on screen.

EQUIPMENT	HOURS	EQUIPMENT	HOURS
Rock Truck		Screen	
270 track hoe		Rock truck	
200 track hoe		Loader	
31 dozer		D61 dozed	

LABOR

NAME	OCCUPATION	START TIME:	STOP TIME:	HOURS
Tyler Hollis	Forman	6:30	11:00	4.5
Jonathan Tenney	Labor	6:30	11:00	4.5
Statlin Ponder	Labor	6:30	11:00	4.5
Ethan Howle	Labor			
Frank Hollis	Labor	6:30	11:00	4.5
Matt Owen	Forman	6:30	11:00	4.5
Gary Murphy	Operator	6:30	11:00	4.5
Joseph Meggs	Labor	6:30	11:00	4.5
			Total Crew Hours for Today:	31.5
			Total Crew Hours Cumulative:	6121

Details of Hauling/ Weight ticket # and tons

TRUCK	WEIGHT TICKET # / TONS	LOAD COUNT	ORIGIN	DESTINATION
Teague				
Teague				
TC truck				
Jerry truck				
Jerry truck				
Jerry truck				
Jerry truck				
Jerry truck				

Weather Report

Rained off and on most of the day.

Solutia OU-3 Remediation Action

Construction Daily Work Report

Day # _____

Project Number/Name:	OU-3
Safety Meeting Topic:	Hydration
Date:	1/17/16 Sunday

Activities/ Deliveries

Specific task working and or accomplished today:
Tried to screen and stock pile material but it was still to wet.

EQUIPMENT	HOURS	EQUIPMENT	HOURS
Rock Truck		Screen	
270 track hoe		Rock truck	
200 track hoe		Loader	
31 dozer		D61 dozed	

LABOR

NAME	OCCUPATION	START TIME:	STOP TIME:	HOURS
Tyler Hollis	Forman	6:30	10:00	3.5
Jonathan Tenney	Labor	6:30	10:00	3.5
Statlin Ponder	Labor	6:30	10:00	3.5
Ethan Howle	Labor			
Frank Hollis	Labor			
Matt Owen	Forman	6:30	10:00	3.5
Gary Murphy	Operator			
Joseph Meggs	Labor			
			Total Crew Hours for Today:	14
			Total Crew Hours Cumulative:	6135

Details of Hauling/ Weight ticket # and tons

TRUCK	WEIGHT TICKET # / TONS	LOAD COUNT	ORIGIN	DESTINATION
Teague				
Teague				
TC truck				
Jerry truck				
Jerry truck				
Jerry truck				
Jerry truck				
Jerry truck				

Weather Report

Rained off and on most of the day.

Solutia OU-3 Remediation Action

Construction Daily Work Report

Day # 148

Project Number/Name:	OU-3
Safety Meeting Topic:	Hyperthermia
Date:	1-18-16. Monday

Activities/ Deliveries

Specific task working and or accomplished today:

AREA E:we got the Ballards moved over to the pump station at area e and Browns concrete started form up the wall on the inside and outside where the control room going on the west side.

EQUIPMENT	HOURS	EQUIPMENT	HOURS

LABOR

NAME	OCCUPATION	START TIME:	STOP TIME:	HOURS
Randy crew	Foreman 5 guys	3:30	4:30	5
Mile	Safety	6:30	3:30	9
Browns concrete	4 guys	7:30	4:30	36
			Total Crew Hours for Today:	50
			Total Crew Hours Cumulative:	12,977.50

Details of Hauling/ Weight ticket # and tons

TRUCK	WEIGHT TICKET # / TONS	LOAD COUNT	ORIGIN	DESTINATION

Weather Report

Sunny. High 40. Low 20.

Randy Goodwin

Solutia OU-3 Remediation Action

Construction Daily Work Report

Day # 15

Project Number/Name:	OU-3. Ground water
Safety Meeting Topic:	Hyperthermia
Date:	1-18-16. Monday

Activities/ Deliveries

Specific task working and or accomplished today:

GROUND WATER: cored 1 3" hole in each of the vaults dug out and graded and set both vaults and got backfilled on iw 27 and iw 26.

EQUIPMENT	HOURS	EQUIPMENT	HOURS
78 mini hoe	9		
John deer skid steer	9		

LABOR

NAME	OCCUPATION	START TIME:	STOP TIME:	HOURS
Randy crew	Foreman 5 guys	6:30	3:30	45
Mile	Safety	3:30	4:30	1
			Total Crew Hours for Today:	46
			Total Crew Hours Cumulative:	631.5

Details of Hauling/ Weight ticket # and tons

TRUCK	WEIGHT TICKET # / TONS	LOAD COUNT	ORIGIN	DESTINATION
Taylor dump truck	000622079/21.75 tons	1	McCartney	57 stone iw 26 & 27

Weather Report

Sunny. High 40. Low 20.

Randy Goodwin

Solutia OU-3 Remediation Action

Construction Daily Work Report

Day # _____

Project Number/Name:	OU-3
Safety Meeting Topic:	Hydration
Date:	1/18/16 Monday

Activities/ Deliveries

Specific task working and or accomplished today:

Screened and hauled 17 loads of dirt to PCB cell. Had problems with the screen. 17 loads of tope soil hauled in to the PCB cell. Grass works (7 guys 10:00-2:30. 31hr) Fence (4 guys 9:00-4:00 28hr)

EQUIPMENT	HOURS	EQUIPMENT	HOURS
Rock Truck	8	Screen	8
270 track hoe	8	Rock truck	8
200 track hoe	8	Loader	10
31 dozer	10	D61 dozed	10

LABOR

NAME	OCCUPATION	START TIME:	STOP TIME:	HOURS
Tyler Hollis	Forman	6:30	4:30	10
Jonathan Tenney	Labor	6:30	4:30	10
Statlin Ponder	Labor	6:30	4:30	10
Ethan Howle	Labor	6:30	4:30	10
Frank Hollis	Labor	6:30	4:30	10
Matt Owen	Forman	6:30	4:30	10
Gary Murphy	Operator	6:30	4:30	10
2 temps	Labor	11:00	2:30	3.5
			Total Crew Hours for Today:	136
			Total Crew Hours Cumulative:	6271

Details of Hauling/ Weight ticket # and tons

TRUCK	WEIGHT TICKET # / TONS	LOAD COUNT	ORIGIN	DESTINATION
Teague				
Teague				
TC truck				
Jerry truck				
Jerry truck				
Jerry truck				
Jerry truck				
Jerry truck				

Weather Report

Rained off and on most of the day.

Solutia OU-3 Remediation Action

Construction Daily Work Report

Day # 149

Project Number/Name:	OU-3
Safety Meeting Topic:	Top 10 causes of work place injuries
Date:	1-19-16. Tuesday

Activities/ Deliveries

Specific task working and or accomplished today:

AREA E:got the 4 bollards dug out and set in concrete around pump station,Browns concrete continued working on forming the wall.

EQUIPMENT	HOURS	EQUIPMENT	HOURS
John deer skid steer	6		

LABOR

NAME	OCCUPATION	START TIME:	STOP TIME:	HOURS
Randy crew	Foreman 5 guys	6:30	12:30	30
Mile	Safety	6:30	3:30	9
Browns concrete	5 guys	7:30	4:00	42.5
			Total Crew Hours for Today:	81.5
			Total Crew Hours Cumulative:	13,059

Details of Hauling/ Weight ticket # and tons

TRUCK	WEIGHT TICKET # / TONS	LOAD COUNT	ORIGIN	DESTINATION

Weather Report

Sunny. High 42. Low 27

Randy Goodwin

Solutia OU-3 Remediation Action

Construction Daily Work Report

Day # 16

Project Number/Name:	OU-3. Ground water
Safety Meeting Topic:	Top 10 cause of work place injuries
Date:	1-19-16. Tuesday

Activities/ Deliveries

2 vaults

Specific task working and or accomplished today:

GOUND WATER:dug out from building to both vaults to run our 2" poly lines and conduits and loaded in a roll off and loaded out the dirt we had piled up on the ground and unloaded 2 more vaults.

EQUIPMENT	HOURS	EQUIPMENT	HOURS
John deer skid steer	4		
78 mini hoe	4		

LABOR

NAME	OCCUPATION	START TIME:	STOP TIME:	HOURS
Randy crew	Foreman 5 guys	12:30	4:30	20
Mile	Safety	3:30	4:30	1
			Total Crew Hours for Today:	21
			Total Crew Hours Cumulative:	652.5

Details of Hauling/ Weight ticket # and tons

TRUCK	WEIGHT TICKET # / TONS	LOAD COUNT	ORIGIN	DESTINATION

Weather Report

Sunny. High 42. Low 27

Solutia OU-3 Remediation Action

Construction Daily Work Report

Day # _____

Project Number/Name:	OU-3
Safety Meeting Topic:	Hypothermia
Date:	1/19/16 Tuesday

Activities/ Deliveries

Specific task working and or accomplished today:
Screened and hauled 20 loads of dirt to PCB cell. Had trouble with the screen. Hauled in 40 loads of tope soil to the PCB cell to stock pile.

EQUIPMENT	HOURS	EQUIPMENT	HOURS
Rock Truck	8	Screen	8
270 track hoe	8	Rock truck	8
200 track hoe	8	Loader	10
31 dozer	10	D61 dozed	10

LABOR

NAME	OCCUPATION	START TIME:	STOP TIME:	HOURS
Tyler Hollis	Forman	6:30	5:00	10.5
Jonathan Tenney	Labor	6:30	5:00	10.5
Statlin Ponder	Labor	6:30	5:00	10.5
Ethan Howle	Labor	6:30	5:00	10.5
Frank Hollis	Labor	6:30	5:00	10.5
Matt Owen	Forman	6:30	4:30	10
Gary Murphy	Operator	6:30	4:30	10
2 temps	Labor	6:30	3:30	9
			Total Crew Hours for Today:	81.5
			Total Crew Hours Cumulative:	6352.5

Details of Hauling/ Weight ticket # and tons

TRUCK	WEIGHT TICKET # / TONS	LOAD COUNT	ORIGIN	DESTINATION
Teague				
Teague				
TC truck				
Jerry truck				
Jerry truck				
Jerry truck				
Jerry truck				
Jerry truck				

Weather Report

Rained off and on most of the day.

Solutia OU-3 Remediation Action

Construction Daily Work Report

Day # 150

Project Number/Name:	OU-3
Safety Meeting Topic:	Driver awareness
Date:	1-20-16. Wednesday

Activities/ Deliveries

Specific task working and or accomplished today:

AREA E: Browns concrete continued working forming up the wall around the control room.

EQUIPMENT	HOURS	EQUIPMENT	HOURS

LABOR

NAME	OCCUPATION	START TIME:	STOP TIME:	HOURS
Mile	Safety	6:30	3:30	9
Browns concrete	5 guys	7:30	4:30	45
			Total Crew Hours for Today:	54
			Total Crew Hours Cumulative:	13,113

Details of Hauling/ Weight ticket # and tons

TRUCK	WEIGHT TICKET # / TONS	LOAD COUNT	ORIGIN	DESTINATION

Weather Report

Showers. High 48. Low 39

Randy Goodwin

Solutia OU-3 Remediation Action

Construction Daily Work Report

Day # 17

Project Number/Name:	OU-3 ground water
Safety Meeting Topic:	Driver awareness
Date:	1-20-16. Wednesday

Activities/ Deliveries

Specific task working and or accomplished today:

GROUND WATER: Layed 37' of 2" poly to first value,Layed 40" of 2" poly to the 2nd vault,then Layed 50' of 2" poly towards man hole that we got to tie into to got all 3 line electro fused to the stub out outside the building and backfilled with clean dirt.Littleton electric ran conduits to both vaults and mounted power box in side both vaults ran some conduits inside the building.

EQUIPMENT	HOURS	EQUIPMENT	HOURS
78 mini hoe	2		
Vermeer mini hoe	3		
John deer skid steer	7		

LABOR

NAME	OCCUPATION	START TIME:	STOP TIME:	HOURS
Randy crew	Foreman 4 guys	6:30	4:30	40
Mile	Safety	3:30	4:30	1
Bryan		0:00		
Littleton electric	2 guys	6:30	2:30	16
			Total Crew Hours for Today:	57
			Total Crew Hours Cumulative:	709.5

Details of Hauling/ Weight ticket # and tons

TRUCK	WEIGHT TICKET # / TONS	LOAD COUNT	ORIGIN	DESTINATION

Weather Report

Showers. High 48. Low 38

Randy Woodruff

Solutia OU-3 Remediation Action

Construction Daily Work Report

Day # _____

Project Number/Name:	OU-3
Safety Meeting Topic:	Driver awareness
Date:	1/20/16 Wednesday

Activities/ Deliveries

Specific task working and or accomplished today:

7 loads of screened material hauled to PCB cell. 20 loads of tope soil hauled in and stock piled at PCB cell. Had trouble with the screen. Was to wet to haul by lunch. Worked on screen and worked in the borrow pit.

EQUIPMENT	HOURS	EQUIPMENT	HOURS
Rock Truck	5	Screen	5
270 track hoe	5	Rock truck	8
200 track hoe	5	Loader	5
31 dozer	8	D61 dozed	5

LABOR

NAME	OCCUPATION	START TIME:	STOP TIME:	HOURS
Tyler Hollis	Forman	6:30	4:00	9.5
Jonathan Tenney	Labor	6:30	4:00	9.5
Statlin Ponder	Labor	6:30	4:00	9.5
Ethan Howle	Labor	6:30	4:00	9.5
Frank Hollis	Labor	6:30	4:00	9.5
Matt Owen	Forman	6:30	4:00	9.5
Gary Murphy	Operator	6:30	4:00	9.5
Fence guys	4 guys	9:00	4:00	28
			Total Crew Hours for Today:	94.5
			Total Crew Hours Cumulative:	6447

Details of Hauling/ Weight ticket # and tons

TRUCK	WEIGHT TICKET # / TONS	LOAD COUNT	ORIGIN	DESTINATION
Teague				
Teague				
TC truck				
Jerry truck				
Jerry truck				
Jerry truck				
Jerry truck				
Jerry truck				

Weather Report

Rained off and on most of the day.

Solutia OU-3 Remediation Action

Construction Daily Work Report

Day # 151

Project Number/Name:	OU-3
Safety Meeting Topic:	Falls/health
Date:	1-21-16. Thursday

Activities/ Deliveries

Specific task working and or accomplished today:

AREA E:Browns concrete continued working on the wall around the control room

EQUIPMENT	HOURS	EQUIPMENT	HOURS

LABOR

NAME	OCCUPATION	START TIME:	STOP TIME:	HOURS
Mile	Safety	6:30	3:30	9
Browns concrete	5 guys	7:30	3:30	40
			Total Crew Hours for Today:	49
			Total Crew Hours Cumulative:	13,162

Details of Hauling/ Weight ticket # and tons

TRUCK	WEIGHT TICKET # / TONS	LOAD COUNT	ORIGIN	DESTINATION

Weather Report

Periods of rain. High 53. Low 47

Randy Goodwin

Solutia OU-3 Remediation Action

Construction Daily Work Report

Day # 18

Project Number/Name:	OU-3 ground water
Safety Meeting Topic:	Falls/health
Date:	1-21-16. Thursday

Activities/ Deliveries

Specific task working and or accomplished today:

Sealed up the hole that we ran our poly line in both vaults and sealed off the conduits in both vaults.

EQUIPMENT	HOURS	EQUIPMENT	HOURS

LABOR

NAME	OCCUPATION	START TIME:	STOP TIME:	HOURS
Randy crew	Foreman 5 guys	6:30	8:00	7.5
Mile	Safety	3:30	4:00	0.5
			Total Crew Hours for Today:	8
			Total Crew Hours Cumulative:	717.5

Details of Hauling/ Weight ticket # and tons

TRUCK	WEIGHT TICKET # / TONS	LOAD COUNT	ORIGIN	DESTINATION

Weather Report

Periods of rain. High 53. Low 47

Solutia OU-3 Remediation Action

Construction Daily Work Report

Day # _____

Project Number/Name:	OU-3
Safety Meeting Topic:	Health and fall prevention
Date:	1/21/16 Thursday

Activities/ Deliveries

Specific task working and or accomplished today:

Worked in area C&D. Made the ditch around the south east side of C&D wider. Dug drainage ditch down the slop. Put down 1200 sq ft of fabric. Filled 3.5 containers. Got the flooring down for the property fence.

EQUIPMENT	HOURS	EQUIPMENT	HOURS
Rock Truck		Screen	
270 track hoe		Rock truck	
200 track hoe	5	Loader	5
78 track hoe	8	Bob cat	8

LABOR

NAME	OCCUPATION	START TIME:	STOP TIME:	HOURS
Tyler Hollis	Forman	6:30	4:00	9.5
Jonathan Tenney	Labor	6:30	4:00	9.5
Statlin Ponder	Labor	6:30	4:00	9.5
Ethan Howle	Labor	6:30	4:00	9.5
Frank Hollis	Labor	6:30	4:00	9.5
Matt Owen	Forman	6:30	3:00	8.5
Gary Murphy	Operator	6:30	4:00	9.5
Fence guys	4 guys	8:00	3:00	28
			Total Crew Hours for Today:	93.5
			Total Crew Hours Cumulative:	6540.5

Details of Hauling/ Weight ticket # and tons

TRUCK	WEIGHT TICKET # / TONS	LOAD COUNT	ORIGIN	DESTINATION
Teague		5	Vulcan	C&D
Teague				
TC truck				
Jerry truck				
Jerry truck				
Jerry truck				
Jerry truck				
Jerry truck				

Weather Report

Rained off and on most of the day.

Solutia OU-3 Remediation Action

Construction Daily Work Report

Day # 152

Project Number/Name:	OU-3
Safety Meeting Topic:	Driving conditions/work place violence
Date:	1-22-16. Friday

Activities/ Deliveries

Specific task working and or accomplished today:

Safety meeting then rained out

EQUIPMENT	HOURS	EQUIPMENT	HOURS

LABOR

NAME	OCCUPATION	START TIME:	STOP TIME:	HOURS
Randy crew	5 guys	6:30	7:30	5
Browns concrete		0:00		
Mile	Safety	6:30	11:00	4.5
			Total Crew Hours for Today:	9.5
			Total Crew Hours Cumulative:	13,171.50

Details of Hauling/ Weight ticket # and tons

TRUCK	WEIGHT TICKET # / TONS	LOAD COUNT	ORIGIN	DESTINATION

Weather Report

Showers. High 51. Low 30.

Solutia OU-3 Remediation Action

Construction Daily Work Report

Day # _____

Project Number/Name:	OU-3
Safety Meeting Topic:	Health and fall prevention
Date:	1/22/16 Friday

Activities/ Deliveries

Specific task working and or accomplished today:
Worked in area C&D. Finished rip rap swell on the south east side of C&D. 2 loads of class 1. 4350 sq ft of fabric put down in C&D. Rained out.

EQUIPMENT	HOURS	EQUIPMENT	HOURS
Rock Truck		Screen	
270 track hoe		Rock truck	
200 track hoe		Loader	4
78 track hoe	4	Bob cat	4

LABOR

NAME	OCCUPATION	START TIME:	STOP TIME:	HOURS
Tyler Hollis	Forman	6:30	11:00	4.5
Jonathan Tenney	Labor	6:30	11:00	4.5
Statlin Ponder	Labor	6:30	11:00	4.5
Ethan Howle	Labor	6:30	11:00	4.5
Frank Hollis	Labor	6:30	11:00	4.5
Matt Owen	Forman	6:30	11:00	4.5
Gary Murphy	Operator	6:30	11:00	4.5
			Total Crew Hours for Today:	31.5
			Total Crew Hours Cumulative:	6572

Details of Hauling/ Weight ticket # and tons

TRUCK	WEIGHT TICKET # / TONS	LOAD COUNT	ORIGIN	DESTINATION
Teague		2	Vulcan	C&D
Teague				
TC truck				
Jerry truck				
Jerry truck				
Jerry truck				
Jerry truck				
Jerry truck				

Weather Report

Rained off and on most of the day.

Solutia OU-3 Remediation Action

Construction Daily Work Report

Day # 153

Project Number/Name:	OU-3
Safety Meeting Topic:	360 awareness
Date:	1-25-16. Monday

Activities/ Deliveries

Specific task working and or accomplished today:

AREA E: Browns concrete finished forming wall and poured wall around control pad.

EQUIPMENT	HOURS	EQUIPMENT	HOURS

LABOR

NAME	OCCUPATION	START TIME:	STOP TIME:	HOURS
Randy crew	5 guys	Ground water		
Mile	Safety	6:30	2:00	7.5
Browns concrete	5 guys	7:30	3:30	40
			Total Crew Hours for Today:	47.5
			Total Crew Hours Cumulative:	13,219

Details of Hauling/ Weight ticket # and tons

TRUCK	WEIGHT TICKET # / TONS	LOAD COUNT	ORIGIN	DESTINATION

Weather Report

Sunny. High 58. Low 44

Randy Goodwin

Solutia OU-3 Remediation Action

Construction Daily Work Report

Day # 19

Project Number/Name:	OU-3. Ground water
Safety Meeting Topic:	360 awareness
Date:	1-25-16. Monday

Activities/ Deliveries

Specific task working and or accomplished today:

GROUND WATER:Layed 70' of 2" poly line towards m.h. then started hammering out footer and concrete pad that was buried in the ground.Hammered with rented hammer from 3:30 to 4:30.

EQUIPMENT	HOURS	EQUIPMENT	HOURS
Vermeer mini hoe	10		
John deer skid steer	10		
Rented mini hammer hoe	1.5		

LABOR

NAME	OCCUPATION	START TIME:	STOP TIME:	HOURS
Randy crew	5 guys	6:30	4:30	50
Mile	Safety	2:00	3:00	1
			Total Crew Hours for Today:	51
			Total Crew Hours Cumulative:	768.5

Details of Hauling/ Weight ticket # and tons

TRUCK	WEIGHT TICKET # / TONS	LOAD COUNT	ORIGIN	DESTINATION

Weather Report

Randy Goodwin

Sunny. High 58. Low 44

Solutia OU-3 Remediation Action

Construction Daily Work Report

Day # _____

Project Number/Name:	OU-3
Safety Meeting Topic:	Situational awareness
Date:	1/25/16 Monday

Activities/ Deliveries

Specific task working and or accomplished today:

Hauled sand bags off the pcb cells and stacked them on pallets. Too wet to do much on the cells. / Put in filter ring in front of the drain pipe in area C&D. / Worked on screen. Screen mechanic came out and inspected the screen for repairs.

EQUIPMENT	HOURS	EQUIPMENT	HOURS
Rock Truck		Screen	
270 track hoe		Rock truck	
200 track hoe		Loader	2
78 track hoe	2	Bob cat	

LABOR

NAME	OCCUPATION	START TIME:	STOP TIME:	HOURS
Tyler Hollis	Forman	6:30	5:30	11
Jonathan Tenney	Labor	6:30	5:30	11
Statlin Ponder	Labor	6:30	5:30	11
Ethan Howle	Labor	6:30	5:30	11
Frank Hollis	Labor	6:30	5:30	11
Matt Owen	Forman	6:30	5:30	11
Gary Murphy	Operator	6:30	5:00	10.5
			Total Crew Hours for Today:	76.5
			Total Crew Hours Cumulative:	6648.5

Details of Hauling/ Weight ticket # and tons

TRUCK	WEIGHT TICKET # / TONS	LOAD COUNT	ORIGIN	DESTINATION
Teague				
Teague				
TC truck				
Jerry truck				
Jerry truck				
Jerry truck				
Jerry truck				
Jerry truck				

Weather Report

Rained off and on most of the day.

Solutia OU-3 Remediation Action

Construction Daily Work Report

Day # 154

Project Number/Name:	OU-3
Safety Meeting Topic:	
Date:	1-26-16. Thursday

Activities/ Deliveries

Specific task working and or accomplished today:

EQUIPMENT	HOURS	EQUIPMENT	HOURS

LABOR

NAME	OCCUPATION	START TIME:	STOP TIME:	HOURS
Randy crew	5 guys	0:00		
Mile	Safety	8:00	2:30	6.5
Browns concrete		0:00		
			Total Crew Hours for Today:	6.5
			Total Crew Hours Cumulative:	13,225.50

Details of Hauling/ Weight ticket # and tons

TRUCK	WEIGHT TICKET # / TONS	LOAD COUNT	ORIGIN	DESTINATION

Weather Report

Periods of rain. High 60. Low 38.

Solutia OU-3 Remediation Action

Construction Daily Work Report

Day # 20

Project Number/Name:	OU-3 ground water
Safety Meeting Topic:	
Date:	1-26-16. Tuesday

Activities/ Deliveries

Specific task working and or accomplished today:

GROUND WATER: put in 95' of 2" poly line hammered out 2 footers 8" wide x 1'6" deep than hammered out 93' of concrete pad or road 18" wide x 6" deep used 475' of 6oz fabric used 500' of 6oz fabric the other days for the poly I forgot to add on the other daily's.

EQUIPMENT	HOURS	EQUIPMENT	HOURS
Rented hammer mini hie	7		
Vermeer mini hoe	7		
John deer skid steer	7		

LABOR

NAME	OCCUPATION	START TIME:	STOP TIME:	HOURS
Randy crew	5 guys	6:30	3:00	42.5
Mile	Safety	2:30	3:00	0.5
			Total Crew Hours for Today:	43
			Total Crew Hours Cumulative:	811.5

Details of Hauling/ Weight ticket # and tons

TRUCK	WEIGHT TICKET # / TONS	LOAD COUNT	ORIGIN	DESTINATION

Weather Report

Periods of rain. High 60. Low 38 Randy Goodwin

Solutia OU-3 Remediation Action

Construction Daily Work Report

Day # _____

Project Number/Name:	OU-3
Safety Meeting Topic:	Situational awareness
Date:	1/26/16 Tuesday

Activities/ Deliveries

Specific task working and or accomplished today:

Hauled some of the poly off the pcb cell. Dug a ditch through the tops soil pile in the low point of the cell to allow the water to drain./ Worked on screen. Moved the screens up closer to the feed belt./ Started raining shortly after lunch.

EQUIPMENT	HOURS	EQUIPMENT	HOURS
Rock Truck		Screen	
270 track hoe		Rock truck	
200 track hoe		Loader	
78 track hoe		Bob cat	

LABOR

NAME	OCCUPATION	START TIME:	STOP TIME:	HOURS
Tyler Hollis	Forman	6:30	2:30	8
Jonathan Tenney	Labor	6:30	2:30	8
Statlin Ponder	Labor	6:30	2:30	8
Ethan Howle	Labor	6:30	2:30	8
Frank Hollis	Labor	6:30	2:30	8
Matt Owen	Forman	6:30	2:30	8
Gary Murphy	Operator	6:30	2:30	8
			Total Crew Hours for Today:	56
			Total Crew Hours Cumulative:	6704.5

Details of Hauling/ Weight ticket # and tons

TRUCK	WEIGHT TICKET # / TONS	LOAD COUNT	ORIGIN	DESTINATION
Teague				
Teague				
TC truck				
Jerry truck				
Jerry truck				
Jerry truck				
Jerry truck				
Jerry truck				

Weather Report

Rained off and on most of the day.

Solutia OU-3 Remediation Action

Construction Daily Work Report

Day # 155

Project Number/Name:	OU-3
Safety Meeting Topic:	Hazardous awareness/proper ppe
Date:	1-27-16. Wednesday

Activities/ Deliveries

Specific task working and or accomplished today:

EQUIPMENT	HOURS	EQUIPMENT	HOURS

LABOR

NAME	OCCUPATION	START TIME:	STOP TIME:	HOURS
Mile	Safety	6:30	3:30	9
			Total Crew Hours for Today:	9
			Total Crew Hours Cumulative:	13,234.50

Details of Hauling/ Weight ticket # and tons

TRUCK	WEIGHT TICKET # / TONS	LOAD COUNT	ORIGIN	DESTINATION

Weather Report

Cloudy. High 48. Low 31

Solutia OU-3 Remediation Action

Construction Daily Work Report

Day # 21

Project Number/Name:	OU-3 ground water
Safety Meeting Topic:	Hazardous awareness/proper ppe
Date:	1-27-16. Wednesday

Activities/ Deliveries

Specific task working and or accomplished today:

GROUND WATER:dug test hole on the north side where we running the 2" poly line looking to see how far the concrete ran under ground. Unloaded pipping that goes inside the building 2" fittings and 1 vaults and went over the pipping inside the building.

EQUIPMENT	HOURS	EQUIPMENT	HOURS
Vermeer mini hoe	6		

LABOR

NAME	OCCUPATION	START TIME:	STOP TIME:	HOURS
Randy crew	5 guys	6:30	4:30	50
Mile	Safety	3:30	4:30	1
			Total Crew Hours for Today:	51
			Total Crew Hours Cumulative:	862.5

Details of Hauling/ Weight ticket # and tons

TRUCK	WEIGHT TICKET # / TONS	LOAD COUNT	ORIGIN	DESTINATION

Weather Report

Cloudy. High 48. Low 31

Randy Goodwin

Solutia OU-3 Remediation Action

Construction Daily Work Report

Day # _____

Project Number/Name:	OU-3
Safety Meeting Topic:	Hazardous awareness
Date:	1/27/16 Wednesday

Activities/ Deliveries

Specific task working and or accomplished today:

Worked in area A. Dug footers around the two eastern most boxes and put 4" of DGA. / Pulled sand bags and poly off the pcb cells./ Put down 24 stone (reused stone from deacon pad) in swell ditch on the south east side of C&D. 945sq ft of fabric.

EQUIPMENT	HOURS	EQUIPMENT	HOURS
Rock Truck		Screen	
270 track hoe		Rock truck	
200 track hoe		Loader	8
78 track hoe	8	D61 dozer	8

LABOR

NAME	OCCUPATION	START TIME:	STOP TIME:	HOURS
Tyler Hollis	Forman	6:30	4:30	10
Jonathan Tenney	Labor	6:30	4:30	10
Statlin Ponder	Labor	6:30	4:30	10
Ethan Howle	Labor	6:30	4:30	10
Frank Hollis	Labor	6:30	4:30	10
Matt Owen	Forman	6:30	4:30	10
Gary Murphy	Operator	6:30	4:30	10
4 temps	Labor	6:30	4:00	38
			Total Crew Hours for Today:	108
			Total Crew Hours Cumulative:	6812.5

Details of Hauling/ Weight ticket # and tons

TRUCK	WEIGHT TICKET # / TONS	LOAD COUNT	ORIGIN	DESTINATION
Teague				
Teague				
TC truck	DGA	1	Vulcan	Area A
Jerry truck				
Jerry truck				
Jerry truck				
Jerry truck				
Jerry truck				

Weather Report

Rained off and on most of the day.

Solutia OU-3 Remediation Action

Construction Daily Work Report

Day # _____

Project Number/Name:	OU-3
Safety Meeting Topic:	Hazardous awareness
Date:	1/28/16 Thursday

Activities/ Deliveries

Specific task working and or accomplished today:

17 Loads of top soil hauled into the pcb cells. Pulled 3/4 of the north south haul road out to use in the 1' cover. Pulled some more of the sand bags and poly off the pcb cell./ Got the new screen today it took most of the morning to get it set up. Had some problems out of the screen after lunch but we got team fixed.

EQUIPMENT	HOURS	EQUIPMENT	HOURS
Rock Truck	10	Screen	5
270 track hoe	8	Rock truck	10
200 track hoe	10	Loader	8
31 dozer	10	D61 dozer	10

LABOR

NAME	OCCUPATION	START TIME:	STOP TIME:	HOURS
Tyler Hollis	Forman	6:30	5:00	10.5
Jonathan Tenney	Labor	6:30	5:00	10.5
Statlin Ponder	Labor	6:30	5:00	10.5
Ethan Howle	Labor	6:30	5:00	10.5
Frank Hollis	Labor	6:30	5:00	10.5
Matt Owen	Forman	6:30	5:00	10.5
Gary Murphy	Operator	6:30	5:00	10.5
4 temps	Labor	6:30	3:30	36
			Total Crew Hours for Today:	109.5
			Total Crew Hours Cumulative:	6922

Details of Hauling/ Weight ticket # and tons

TRUCK	WEIGHT TICKET # / TONS	LOAD COUNT	ORIGIN	DESTINATION
TC truck	Top soil	4	Sports complex	Pcb cell
TC truck	Top soil	4	Sports complex	Pcb cell
TC truck	Top soil	4	Sports complex	Pcb cell
Jerry truck	Top soil	3	Sports complex	Pcb cell
Jerry truck	Top soil	2	Sports complex	Pcb cell
Jerry truck				
Jerry truck				
Jerry truck				

Weather Report

Rained off and on most of the day.

Solutia OU-3 Remediation Action

Construction Daily Work Report

Day # 157

Project Number/Name:	OU-3
Safety Meeting Topic:	Slips,trips,fall
Date:	1-29-16. Friday

Activities/ Deliveries

Specific task working and or accomplished today:

EQUIPMENT	HOURS	EQUIPMENT	HOURS

LABOR

NAME	OCCUPATION	START TIME:	STOP TIME:	HOURS
Mile	Safety	6:30	3:30	9
			Total Crew Hours for Today:	9
			Total Crew Hours Cumulative:	13,293.50

Details of Hauling/ Weight ticket # and tons

TRUCK	WEIGHT TICKET # / TONS	LOAD COUNT	ORIGIN	DESTINATION

Weather Report

Sunny. High 58. Low. 33

Randy Goodwin

Solutia OU-3 Remediation Action

Construction Daily Work Report

Day # 22

Project Number/Name:	OU-3 ground water
Safety Meeting Topic:	Slips,trips,fall
Date:	1-29-16. Friday

Activities/ Deliveries

Specific task working and or accomplished today:

GROUND WATER:Layed 311' of 2" poly pipe and got backfilled hammered out 10' that was 8" thick and hammered out 137' that was 4" thick

EQUIPMENT	HOURS	EQUIPMENT	HOURS
Vermeer mini hoe	10		
Hammer hoe	7		
John deer skid steer	10		

LABOR

NAME	OCCUPATION	START TIME:	STOP TIME:	HOURS
Randy		6:30	4:30	10
Deon		6:30	4:30	10
Kevin		6:30	4:30	10
Chris		6:30	4:30	10
Bryan		6:30	4:30	10
Mile	Safety	3:30	4:30	1
			Total Crew Hours for Today:	51
			Total Crew Hours Cumulative:	913.5

Details of Hauling/ Weight ticket # and tons

TRUCK	WEIGHT TICKET # / TONS	LOAD COUNT	ORIGIN	DESTINATION

Weather Report

Sunny. High 58. Low 33

Solutia OU-3 Remediation Action

Construction Daily Work Report

Day # _____

Project Number/Name:	OU-3
Safety Meeting Topic:	Slips,Trips,Falls
Date:	1/29/16 Friday

Activities/ Deliveries

Specific task working and or accomplished today:
54 loads of top soil hauled in to the pcb cell. Spread top soil in the north east corner of the pcb cell./ Having trouble with the new screen getting stopped up.

EQUIPMENT	HOURS	EQUIPMENT	HOURS
Rock Truck	10	Screen	8
270 track hoe	10	Rock truck	
200 track hoe	8	Loader	10
31 dozer	10	D61 dozer	10

LABOR

NAME	OCCUPATION	START TIME:	STOP TIME:	HOURS
Tyler Hollis	Forman	6:30	5:00	10.5
Jonathan Tenney	Labor	6:30	4:00	9.5
Statlin Ponder	Labor	6:30	5:00	10.5
Ethan Howle	Labor	6:30	5:00	10.5
Frank Hollis	Labor	6:30	5:00	10.5
Matt Owen	Forman	6:30	5:00	10.5
Gary Murphy	Operator	6:30	5:00	10.5
			Total Crew Hours for Today:	72.5
			Total Crew Hours Cumulative:	6994.5

Details of Hauling/ Weight ticket # and tons

TRUCK	WEIGHT TICKET # / TONS	LOAD COUNT	ORIGIN	DESTINATION
TC truck	Top soil	6	Sports complex	Pcb cell
TC truck	Top soil	7	Sports complex	Pcb cell
TC truck	Top soil	6	Sports complex	Pcb cell
Jerry truck	Top soil	7	Sports complex	Pcb cell
Jerry truck	Top soil	7	Sports complex	Pcb cell
Teague truck	Top soil	7	Sports complex	Pcb cell
Teague truck	Top soil	7	Sports complex	Pcb cell
Benchmark truck	Top soil	7	Sports complex	Pcb cell

Weather Report

Rained off and on most of the day.

Solutia OU-3 Remediation Action

Construction Daily Work Report

Day # 158

Project Number/Name:	OU-3
Safety Meeting Topic:	
Date:	1-30-16. Saturday

Activities/ Deliveries

Specific task working and or accomplished today:

AREA A:disced up area a and rolled in put in 120' of waddles, Browns concrete started forming up existing vaults.

EQUIPMENT	HOURS	EQUIPMENT	HOURS
Tractor with disc	7		
Smooth roller	7		

LABOR

NAME	OCCUPATION	START TIME:	STOP TIME:	HOURS
Mile	Safety	6:30	2:30	8
Kevin		6:30	1:30	7
Bryan		6:30	1:30	7
Browns concrete	3 guys	7:00	12:00	15
			Total Crew Hours for Today:	37
			Total Crew Hours Cumulative:	13,330.50

Details of Hauling/ Weight ticket # and tons

TRUCK	WEIGHT TICKET # / TONS	LOAD COUNT	ORIGIN	DESTINATION

Weather Report

Sunny. High 67. Low 47.

Randy Goodwin

Solutia OU-3 Remediation Action

Construction Daily Work Report

Day # 23

Project Number/Name:	OU-3 ground water
Safety Meeting Topic:	Under ground utilities
Date:	1-30-16. Saturday

Activities/ Deliveries

Specific task working and or accomplished today:

GROUND WATER:dug out and graded and set vault in front of employee parking lot.

EQUIPMENT	HOURS	EQUIPMENT	HOURS
Vermeer mini hoe	7		
78 mini hoe	2		
John deer skid steer	7		

LABOR

NAME	OCCUPATION	START TIME:	STOP TIME:	HOURS
Randy		6:30	1:30	7
Deon		6:30	1:30	7
Chris		6:30	1:30	7
			Total Crew Hours for Today:	21
			Total Crew Hours Cumulative:	934.5

Details of Hauling/ Weight ticket # and tons

TRUCK	WEIGHT TICKET # / TONS	LOAD COUNT	ORIGIN	DESTINATION

Weather Report

Sunny. High 67. Low 46.

Solutia OU-3 Remediation Action

Construction Daily Work Report

Day # _____

Project Number/Name:	OU-3
Safety Meeting Topic:	Slips,Trips,Falls
Date:	1/30/16 Saturday

Activities/ Deliveries

Specific task working and or accomplished today:
Spread top soil out in the north east corner of the pcb cell. / Screened dirt and stock piled at the borrow pit.

EQUIPMENT	HOURS	EQUIPMENT	HOURS
Rock Truck	10	Screen	10
270 track hoe	10	Rock truck	
200 track hoe	10	Loader	10
31 dozer		D61 dozer	10

LABOR

NAME	OCCUPATION	START TIME:	STOP TIME:	HOURS
Tyler Hollis	Forman	6:30	2:30	8
Jonathan Tenney	Labor			
Statlin Ponder	Labor	6:30	2:00	7.5
Ethan Howle	Labor	6:30	1:00	6.5
Frank Hollis	Labor	6:30	2:30	8
Matt Owen	Forman	6:30	2:30	8
Gary Murphy	Operator	6:30	2:30	8
			Total Crew Hours for Today:	46
			Total Crew Hours Cumulative:	7040.5

Details of Hauling/ Weight ticket # and tons

TRUCK	WEIGHT TICKET # / TONS	LOAD COUNT	ORIGIN	DESTINATION
TC truck				
TC truck				
TC truck				
Jerry truck				
Jerry truck				
Teague truck				
Teague truck				
Benchmark truck				

Weather Report

Rained off and on most of the day.

Solutia OU-3 Remediation Action

Construction Daily Work Report

Day # _____

Project Number/Name:	OU-3
Safety Meeting Topic:	Slips,Trips,Falls
Date:	1/31/16 Sunday

Activities/ Deliveries

Specific task working and or accomplished today:
Hauled 14 loads of screened material to pcb cell. Pushed more of the haul road out./ Screened dirt.

EQUIPMENT	HOURS	EQUIPMENT	HOURS
Rock Truck	10	Screen	10
270 track hoe	10	Rock truck	
200 track hoe	10	Loader	10
31 dozer		D61 dozer	10

LABOR

NAME	OCCUPATION	START TIME:	STOP TIME:	HOURS
Tyler Hollis	Forman	6:30	2:30	8
Jonathan Tenney	Labor			
Statlin Ponder	Labor	6:30	2:30	8
Ethan Howle	Labor	6:30	2:30	8
Frank Hollis	Labor	6:30	2:30	8
Matt Owen	Forman	6:30	2:30	8
Gary Murphy	Operator	6:30	2:30	8
			Total Crew Hours for Today:	64
			Total Crew Hours Cumulative:	7104.5

Details of Hauling/ Weight ticket # and tons

TRUCK	WEIGHT TICKET # / TONS	LOAD COUNT	ORIGIN	DESTINATION
TC truck				
TC truck				
TC truck				
Jerry truck				
Jerry truck				
Teague truck				
Teague truck				
Benchmark truck				

Weather Report

Rained off and on most of the day.

Solutia OU-3 Remediation Action

Construction Daily Work Report

Day # 159

Project Number/Name:	OU-3
Safety Meeting Topic:	Using the right tool for the job
Date:	2-1-16. Monday

Activities/ Deliveries

Specific task working and or accomplished today:

AREA A: Browns concrete continued forming around vaults in area a and put in rebar to raise the vaults up

EQUIPMENT	HOURS	EQUIPMENT	HOURS

LABOR

NAME	OCCUPATION	START TIME:	STOP TIME:	HOURS
Browns concrete	4 guys	7:30	4:30	36
Mile	Safety	6:30	3:30	9
Jason	Safety	6:30	3:30	9
			Total Crew Hours for Today:	54
			Total Crew Hours Cumulative:	13,384.50

Details of Hauling/ Weight ticket # and tons

TRUCK	WEIGHT TICKET # / TONS	LOAD COUNT	ORIGIN	DESTINATION

Weather Report

Partly sunny. High 71. Low 58

Randy Goodwin

Solutia OU-3 Remediation Action

Construction Daily Work Report

Day # 24

Project Number/Name:	OU-3 ground water
Safety Meeting Topic:	Using the right tools for the job
Date:	2-1-16. Monday

Activities/ Deliveries

Specific task working and or accomplished today:

GROUND WATER:put 2 ball valves and 2 check valves inside of I.w 26 and I.w. 27 vaults.started back on the pipe to the m.h had to hammer out 60' of concrete 2' wide 6" deep,fused together another roll of poly together.

EQUIPMENT	HOURS	EQUIPMENT	HOURS
Vermeer mini hoe	4		
Mini hoe hammer			
John deer skid steer	4		

LABOR

NAME	OCCUPATION	START TIME:	STOP TIME:	HOURS
Randy crew	5 guys	6:30	4:30	50
Mile	Safety	3:30	4:30	1
Jason	Safety	3:30	4:30	1
			Total Crew Hours for Today:	52
			Total Crew Hours Cumulative:	986.5

Details of Hauling/ Weight ticket # and tons

TRUCK	WEIGHT TICKET # / TONS	LOAD COUNT	ORIGIN	DESTINATION

Weather Report

Partly sunny. High 71. Low 58

Solutia OU-3 Remediation Action

Construction Daily Work Report

Day # _____

Project Number/Name:	OU-3
Safety Meeting Topic:	The right tool for the job
Date:	2/1/16 Monday

Activities/ Deliveries

Specific task working and or accomplished today:
Hauled 17 loads of screened material to the pcb cell. Pushed haul road out into fill. Spread top soil./ Screened dirt at borrow pit.

EQUIPMENT	HOURS	EQUIPMENT	HOURS
Rock Truck	10	Screen	10
270 track hoe	10	Rock truck	
200 track hoe	10	Loader	10
31 dozer	10	D61 dozer	10

LABOR

NAME	OCCUPATION	START TIME:	STOP TIME:	HOURS
Tyler Hollis	Forman	6:30	5:00	10.5
Jonathan Tenney	Labor	6:30	5:00	10.5
Statlin Ponder	Labor	6:30	5:00	10.5
Ethan Howle	Labor	6:30	5:00	10.5
Frank Hollis	Labor	6:30	5:00	10.5
Matt Owen	Forman	6:30	5:00	10.5
Gary Murphy	Operator	6:30	5:00	10.5
Fence guys	4 guys	8:30	3:00	30
			Total Crew Hours for Today:	103.5
			Total Crew Hours Cumulative:	7208

Details of Hauling/ Weight ticket # and tons

TRUCK	WEIGHT TICKET # / TONS	LOAD COUNT	ORIGIN	DESTINATION
TC truck				
TC truck				
TC truck				
Jerry truck				
Jerry truck				
Teague truck				
Teague truck				
Benchmark truck				

Weather Report

Rained off and on most of the day.

Solutia OU-3 Remediation Action

Construction Daily Work Report

Day # 160

Project Number/Name:	OU-3
Safety Meeting Topic:	Ppe
Date:	2-2-16 Tuesday

Activities/ Deliveries

Specific task working and or accomplished today:

AREA A: Browns concrete poured the footers and the 6" lip around the 2 vaults.we fixed wash out area under the concrete pad,fixed the bad spot in the ditch that the skid steer ran in,moved the riprap over up at the offic trailor. AREA E:Browns concrete poured the pad around the pump station and filled in the gap between the wall and asphalt with concrete all on the west side of area e.

EQUIPMENT	HOURS	EQUIPMENT	HOURS
John deer skid steer	1		

LABOR

NAME	OCCUPATION	START TIME:	STOP TIME:	HOURS
Browns concrete	4 guys	7:30	3:30	32
Randy crew	5 guys	3:30	4:30	5
			Total Crew Hours for Today:	37
			Total Crew Hours Cumulative:	13,421.50

Details of Hauling/ Weight ticket # and tons

TRUCK	WEIGHT TICKET # / TONS	LOAD COUNT	ORIGIN	DESTINATION

Weather Report

Partly sunny chance of rain. High 72. Low 62

Randy Goodwin

Solutia OU-3 Remediation Action

Construction Daily Work Report

Day # 25

Project Number/Name:	OU-3 ground water
Safety Meeting Topic:	Ppe
Date:	2-2-16. Tuesday

Activities/ Deliveries

Specific task working and or accomplished today:

GROUND WATER: finished laying 2" poly line to m.h 65' of 2" poly hammered out 6' long x 4" thick. Used 325 sq feet of 6 oz fabric used 1,555 sq feet of 6 oz fabric Friday.Built up the dirt over the 2" poly line where it didn't have 24" cover .loaded up 2 roll off cans. Littleton electric looked at the groundin rods on the tray system and wiring up the pumps

EQUIPMENT	HOURS	EQUIPMENT	HOURS
Bobcat mini hoe hammer	1		
Vermeer mini hie	6		
John deer skid steer	8		

LABOR

NAME	OCCUPATION	START TIME:	STOP TIME:	HOURS
Randy crew	5 guys	6:30	3:30	45
Littleton electric	2 guys	2:30	4:00	3
			Total Crew Hours for Today:	48
			Total Crew Hours Cumulative:	1,034.50

Details of Hauling/ Weight ticket # and tons

TRUCK	WEIGHT TICKET # / TONS	LOAD COUNT	ORIGIN	DESTINATION

Weather Report

Partly sunny chance of rain. High 72. Low 62

Randy Goodwin

Solutia OU-3 Remediation Action

Construction Daily Work Report

Day # _____

Project Number/Name:	OU-3
Safety Meeting Topic:	PPE
Date:	2/2/16 Tuesday

Activities/ Deliveries

Specific task working and or accomplished today:
9 loads of screened material hauled to the pcb cell. Pushed out haul road into fill. Spread top soil./Screened dirt at the borrow pit.

EQUIPMENT	HOURS	EQUIPMENT	HOURS
Rock Truck	10	Screen	10
270 track hoe	10	Rock truck	
200 track hoe	10	Loader	10
31 dozer	10	D61 dozer	10

LABOR

NAME	OCCUPATION	START TIME:	STOP TIME:	HOURS
Tyler Hollis	Forman	6:30	4:30	10
Jonathan Tenney	Labor	6:30	4:30	10
Statlin Ponder	Labor	6:30	4:30	10
Ethan Howle	Labor	6:30	4:30	10
Frank Hollis	Labor	6:30	4:30	10
Matt Owen	Forman	6:30	4:30	10
Gary Murphy	Operator	6:30	4:30	10
Fence guys	4 guys	8:30	4:30	32
			Total Crew Hours for Today:	102
			Total Crew Hours Cumulative:	7310

Details of Hauling/ Weight ticket # and tons

TRUCK	WEIGHT TICKET # / TONS	LOAD COUNT	ORIGIN	DESTINATION
TC truck				
TC truck				
TC truck				
Jerry truck				
Jerry truck				
Teague truck				
Teague truck				
Benchmark truck				

Weather Report

Rained off and on most of the day.

Solutia OU-3 Remediation Action

Construction Daily Work Report

Day # _____

Project Number/Name:	Solutia OU-3 Groundwater
Safety Meeting Topic:	Proper Use of Ladders and Fall Protection
Date:	2/3/2016

Activities/ Deliveries

Specific task working and or accompli

Plumbing Carbon Treatment Building at IW 26 and 27

EQUIPMENT	HOURS	EQUIPMENT	HOURS

LABOR

NAME	OCCUPATION	START TIME:	STOP TIME:	HOURS
Sonny Patat	Foreman	6:30	3:30	9
Dewayne Adamson	Laborer	6:30	3:30	9
Brian Fleming	Laborer			
James Ford	Laborer	6:30	3:30	9
Lane Parsons	Laborer	6:30	3:30	9
			Total Crew Hours for Today:	36
			Total Crew Hours Cumulative:	133.5

Details of Hauling/ Weight ticket # and tons

TRUCK	WEIGHT TICKET # / TONS	LOAD COUNT	ORIGIN	DESTINATION

Weather Report

Cloudy and Cool, Rain last night

Solutia OU-3 Remediation Action

Construction Daily Work Report

Day # _____

Project Number/Name:	OU-3
Safety Meeting Topic:	Wet roads
Date:	2/3/16 Wednesday

Activities/ Deliveries

Specific task working and or accomplished today:
Rained out

EQUIPMENT	HOURS	EQUIPMENT	HOURS
Rock Truck		Screen	
270 track hoe		Rock truck	
200 track hoe		Loader	
31 dozer		D61 dozer	

LABOR

NAME	OCCUPATION	START TIME:	STOP TIME:	HOURS
Tyler Hollis	Forman	6:30	10:30	4
Jonathan Tenney	Labor	6:30	10:30	4
Statlin Ponder	Labor			
Ethan Howle	Labor	6:30	10:30	4
Frank Hollis	Labor	6:30	10:30	4
Matt Owen	Forman	6:30	8:30	2
Gary Murphy	Operator	6:30	8:30	2
			Total Crew Hours for Today:	20
			Total Crew Hours Cumulative:	7330

Details of Hauling/ Weight ticket # and tons

TRUCK	WEIGHT TICKET # / TONS	LOAD COUNT	ORIGIN	DESTINATION
TC truck				
TC truck				
TC truck				
Jerry truck				
Jerry truck				
Teague truck				
Teague truck				
Benchmark truck				

Weather Report

Solutia OU-3 Remediation Action

Construction Daily Work Report

Day # _____

Project Number/Name:	Solutia OU-3 Groundwater
Safety Meeting Topic:	Proper Tool for the Job
Date:	2/4/2016

Activities/ Deliveries

Specific task working and or accompli

Plumbing Carbon Treatment Building at IW 26 and 27

EQUIPMENT	HOURS	EQUIPMENT	HOURS

LABOR

NAME	OCCUPATION	START TIME:	STOP TIME:	HOURS
Sonny Patat	Foreman	6:30	4:00	9.5
Dewayne Adamson	Laborer	6:30	4:00	9.5
Brian Fleming	Laborer	6:30	4:00	9.5
James Ford	Laborer	6:30	4:00	9.5
Lane Parsons	Laborer	6:30	4:00	9.5
			Total Crew Hours for Today:	47.5
			Total Crew Hours Cumulative:	181

Details of Hauling/ Weight ticket # and tons

TRUCK	WEIGHT TICKET # / TONS	LOAD COUNT	ORIGIN	DESTINATION

Weather Report

Sunny and Cool high 52

Solutia OU-3 Remediation Action

Construction Daily Work Report

Day # _____

Project Number/Name:	OU-3
Safety Meeting Topic:	PPE
Date:	2/4/16 Thursday

Activities/ Deliveries

Specific task working and or accomplished today:
Worked on screen/ Repaired silt fence on the north east side of the pcb cell.

EQUIPMENT	HOURS	EQUIPMENT	HOURS
Rock Truck		Screen	
270 track hoe		Rock truck	
200 track hoe		Loader	
Mini hoe	2	D61 dozer	

LABOR

NAME	OCCUPATION	START TIME:	STOP TIME:	HOURS
Tyler Hollis	Forman	6:30	4:30	10
Jonathan Tenney	Labor	6:30	4:30	10
Statlin Ponder	Labor	6:30	4:30	10
Ethan Howle	Labor	6:30	4:30	10
Frank Hollis	Labor	6:30	4:30	10
Matt Owen	Forman	6:30	4:30	10
Gary Murphy	Operator	6:30	4:30	10
Fence guys	4 guys	8:30	3:30	28
			Total Crew Hours for Today:	98
			Total Crew Hours Cumulative:	7428

Details of Hauling/ Weight ticket # and tons

TRUCK	WEIGHT TICKET # / TONS	LOAD COUNT	ORIGIN	DESTINATION
TC truck				
TC truck				
TC truck				
Jerry truck				
Jerry truck				
Teague truck				
Teague truck				
Benchmark truck				

Weather Report

Solutia OU-3 Remediation Action

Construction Daily Work Report

Day # _____

Project Number/Name:	Solutia OU-3 Groundwater
Safety Meeting Topic:	Train Smart/Equipment Checklist
Date:	2/5/2016

Activities/ Deliveries

Specific task working and or accompli

Plumbing Carbon Treatment Building at IW 26 and 27

EQUIPMENT	HOURS	EQUIPMENT	HOURS

LABOR

NAME	OCCUPATION	START TIME:	STOP TIME:	HOURS
Sonny Patat	Foreman	6:30	3:30	9
Dewayne Adamson	Laborer	6:30	3:30	9
Brian Fleming	Laborer	6:30	3:30	9
James Ford	Laborer	6:30	3:30	9
Lane Parsons	Laborer	6:30	3:30	9
			Total Crew Hours for Today:	45
			Total Crew Hours Cumulative:	226

Details of Hauling/ Weight ticket # and tons

TRUCK	WEIGHT TICKET # / TONS	LOAD COUNT	ORIGIN	DESTINATION

Weather Report

Sunny and Cool High 49

Solutia OU-3 Remediation Action

Construction Daily Work Report

Day # _____

Project Number/Name:	OU-3
Safety Meeting Topic:	Train smart/ Checklist
Date:	2/5/16 Friday

Activities/ Deliveries

Specific task working and or accomplished today:
26 loads of class 1 rip rap hauled to pcb cell to stock pile for the armor shield.spread top soil./ Got the screen back going.

EQUIPMENT	HOURS	EQUIPMENT	HOURS
Rock Truck	10	Screen	2
270 track hoe	2	Rock truck	
200 track hoe	10	Loader	2
Mini hoe		D61 dozer	10

LABOR

NAME	OCCUPATION	START TIME:	STOP TIME:	HOURS
Tyler Hollis	Forman	6:30	5:00	10.5
Jonathan Tenney	Labor	6:30	5:00	10.5
Statlin Ponder	Labor	6:30	5:00	10.5
Ethan Howle	Labor	6:30	5:00	10.5
Frank Hollis	Labor	6:30	5:00	10.5
Matt Owen	Forman	6:30	5:00	10.5
Gary Murphy	Operator	6:30	5:00	10.5
Fence guys	4 guys	8:30	3:30	28
			Total Crew Hours for Today:	101.5
			Total Crew Hours Cumulative:	7529.5

Details of Hauling/ Weight ticket # and tons

TRUCK	WEIGHT TICKET # / TONS	LOAD COUNT	ORIGIN	DESTINATION
TC truck	Class1	2	Vulcan	Pcb cell
TC truck	Class1	6	Vulcan	Pcb cell
TC truck	Class1	6	Vulcan	Pcb cell
Jerry truck	Class1	6	Vulcan	Pcb cell
Jerry truck	Class1	6	Vulcan	Pcb cell
Teague truck				
Teague truck				
Benchmark truck				

Weather Report

Tyler Hollis

Solutia OU-3 Remediation Action

Construction Daily Work Report

Day # _____

Project Number/Name:	Solutia OU-3 Groundwater
Safety Meeting Topic:	Weather Related Job Site Issues
Date:	2/6/2016

Activities/ Deliveries

Specific task working and or accomplished today:

Tying in Piping at the Vaults for IW 26 and IW 27

EQUIPMENT	HOURS	EQUIPMENT	HOURS

LABOR

NAME	OCCUPATION	START TIME:	STOP TIME:	HOURS
Sonny Patat	Foreman	6:30	11:00	4.5
Dewayne Adamson	Laborer	7:30	11:00	3.5
Brian Fleming	Laborer	6:30	11:00	4.5
James Ford	Laborer			
Lane Parsons	Laborer	6:30	11:00	4.5
			Total Crew Hours for Today:	17
			Total Crew Hours Cumulative:	243

Details of Hauling/ Weight ticket # and tons

TRUCK	WEIGHT TICKET # / TONS	LOAD COUNT	ORIGIN	DESTINATION

Weather Report

Sunny and Cool High 51

Solutia OU-3 Remediation Action

Construction Daily Work Report

Day # _____

Project Number/Name:	OU-3
Safety Meeting Topic:	Train smart/ Checklist
Date:	2/6/16 Saturday

Activities/ Deliveries

Specific task working and or accomplished today:
Screened dirt at borrow pit. Hauled 14 loads of screened material to pcb cell. Pushed out haul road to 1' lift.

EQUIPMENT	HOURS	EQUIPMENT	HOURS
Rock Truck	8	Screen	8
270 track hoe	8	Rock truck	
200 track hoe	8	Loader	8
Mini hoe		D61 dozer	8

LABOR

NAME	OCCUPATION	START TIME:	STOP TIME:	HOURS
Tyler Hollis	Forman	6:30	3:00	8.5
Jonathan Tenney	Labor	6:30	3:00	8.5
Statlin Ponder	Labor	6:30	3:00	8.5
Ethan Howle	Labor	6:30	3:00	8.5
Frank Hollis	Labor	6:30	3:00	8.5
Matt Owen	Forman	6:30	3:00	8.5
Gary Murphy	Operator	6:30	3:00	8.5
Fence guys	4 guys			
			Total Crew Hours for Today:	59.5
			Total Crew Hours Cumulative:	7589

Details of Hauling/ Weight ticket # and tons

TRUCK	WEIGHT TICKET # / TONS	LOAD COUNT	ORIGIN	DESTINATION
TC truck				
TC truck				
TC truck				
Jerry truck				
Jerry truck				
Teague truck				
Teague truck				
Benchmark truck				

Weather Report

Solutia OU-3 Remediation Action

Construction Daily Work Report

Day # _____

Project Number/Name:	OU-3
Safety Meeting Topic:	Lockout tag out
Date:	2/8/16 Monday

Activities/ Deliveries

Specific task working and or accomplished today:
Finished 1' cover lift on pcb cell/ 7 loads of screened material hauled to the pcb cell./ Screened and stock pile dirt.

EQUIPMENT	HOURS	EQUIPMENT	HOURS
Rock Truck	8	Screen	10
270 track hoe	10	Rock truck	
200 track hoe	10	Loader	10
Mini hoe		D61 dozer	10

LABOR

NAME	OCCUPATION	START TIME:	STOP TIME:	HOURS
Tyler Hollis	Forman	6:30	4:30	10
Jonathan Tenney	Labor	6:30	4:30	10
Statlin Ponder	Labor	6:30	4:30	10
Ethan Howle	Labor			
Frank Hollis	Labor	6:30	4:30	10
Matt Owen	Forman	6:30	4:30	10
Gary Murphy	Operator	6:30	4:30	10
Fence guys	4 guys	8:30	4:30	32
			Total Crew Hours for Today:	92
			Total Crew Hours Cumulative:	7681

Details of Hauling/ Weight ticket # and tons

TRUCK	WEIGHT TICKET # / TONS	LOAD COUNT	ORIGIN	DESTINATION
TC truck				
TC truck				
TC truck				
Jerry truck				
Jerry truck				
Teague truck				
Teague truck				
Benchmark truck				

Weather Report

Solutia OU-3 Remediation Action

Construction Daily Work Report

Day # _____

Project Number/Name:	Solutia OU-3 Groundwater
Safety Meeting Topic:	Lockout/ Tagout
Date:	Monday 2/8/2016

Activities/ Deliveries

Specific task working and or accomplished today:

Digging up well piping south of Hwy 202

EQUIPMENT	HOURS	EQUIPMENT	HOURS

LABOR

NAME	OCCUPATION	START TIME:	STOP TIME:	HOURS
Sonny Patat	Foreman	6:30	4:00	9
Brian Fleming	Laborer	6:30	4:00	9
James Ford	Laborer	6:30	4:00	9
			Total Crew Hours for Today:	27
			Total Crew Hours Cumulative:	270

Details of Hauling/ Weight ticket # and tons

TRUCK	WEIGHT TICKET # / TONS	LOAD COUNT	ORIGIN	DESTINATION

Weather Report

Solutia OU-3 Remediation Action

Construction Daily Work Report

Day # _____

Project Number/Name:	OU-3
Safety Meeting Topic:	Speed control
Date:	2/9/16 Tuesday

Activities/ Deliveries

Specific task working and or accomplished today:
Screened and stock piled dirt./ put down 250' (1500sq ft) of the armor shield down the east side of the pcb cell.

EQUIPMENT	HOURS	EQUIPMENT	HOURS
Rock Truck	8	Screen	10
270 track hoe	10	Bob cat	10
200 track hoe	10	Loader	10
Bob cat	10	D61 dozer	10

LABOR

NAME	OCCUPATION	START TIME:	STOP TIME:	HOURS
Tyler Hollis	Forman	6:30	4:30	10
Jonathan Tenney	Labor	6:30	4:30	10
Statlin Ponder	Labor	6:30	4:30	10
Ethan Howle	Labor	6:30	4:30	10
Frank Hollis	Labor	6:30	4:30	10
Matt Owen	Forman	6:30	4:30	10
Gary Murphy	Operator	6:30	4:30	10
Fence guys	4 guys	8:30	4:30	32
			Total Crew Hours for Today:	102
			Total Crew Hours Cumulative:	7783

Details of Hauling/ Weight ticket # and tons

TRUCK	WEIGHT TICKET # / TONS	LOAD COUNT	ORIGIN	DESTINATION
TC truck				
TC truck				
TC truck				
Jerry truck				
Jerry truck				
Teague truck				
Teague truck				
Benchmark truck				

Weather Report

Tyler Hollis

Solutia OU-3 Remediation Action

Construction Daily Work Report

Day # _____

Project Number/Name:	Solutia OU-3 Groundwater
Safety Meeting Topic:	Speed Control
Date:	Tuesday 2/9/2016

Activities/ Deliveries

Specific task working and or accomplished today:

Checking for leaks and line orientation of well piping

EQUIPMENT	HOURS	EQUIPMENT	HOURS

LABOR

NAME	OCCUPATION	START TIME:	STOP TIME:	HOURS
Sonny Patat	Foreman	6:30	4:00	9
Brian Fleming	Laborer	8:00	3:00	6.5
James Ford	Laborer	8:00	4:00	7.5
Dewayne Adamson	Laborer	6:30	4:00	9
			Total Crew Hours for Today:	32
			Total Crew Hours Cumulative:	302

Details of Hauling/ Weight ticket # and tons

TRUCK	WEIGHT TICKET # / TONS	LOAD COUNT	ORIGIN	DESTINATION

Weather Report

Solutia OU-3 Remediation Action

Construction Daily Work Report

Day # _____

Project Number/Name:	OU-3
Safety Meeting Topic:	Cold injury
Date:	2/10/16 Wednesday

Activities/ Deliveries

Specific task working and or accomplished today:

Screened and stock piled dirt./ 29 loads of top soil hauled to the pcb cell and spread out. 190' of arm shield put down 1140sq ft of fabric. Skip 150' in the north east corner where the water is coming out from under the liner.

EQUIPMENT	HOURS	EQUIPMENT	HOURS
Rock Truck	8	Screen	10
270 track hoe	10	Bob cat	10
200 track hoe	10	Loader	10
Bob cat	10	D61 dozer	10

LABOR

NAME	OCCUPATION	START TIME:	STOP TIME:	HOURS
Tyler Hollis	Forman	6:30	4:30	10
Jonathan Tenney	Labor	6:30	4:30	10
Statlin Ponder	Labor	6:30	4:30	10
Ethan Howle	Labor	6:30	4:30	10
Frank Hollis	Labor	6:30	4:30	10
Matt Owen	Forman	6:30	4:30	10
Gary Murphy	Operator	6:30	4:30	10
Fence guys	4 guys	8:30	4:30	32
			Total Crew Hours for Today:	102
			Total Crew Hours Cumulative:	7885

Details of Hauling/ Weight ticket # and tons

TRUCK	WEIGHT TICKET # / TONS	LOAD COUNT	ORIGIN	DESTINATION
TC truck				
TC truck				
TC truck				
Jerry truck				
Jerry truck				
Teague truck				
Teague truck				
Benchmark truck				

Weather Report

Solutia OU-3 Remediation Action

Construction Daily Work Report

Day # _____

Project Number/Name:	Solutia OU-3 Groundwater
Safety Meeting Topic:	Cold Injuries/ Truck Traffic
Date:	Wednesday 2/10/2016

Activities/ Deliveries

Specific task working and or accomplished today:

Digging up well piping

EQUIPMENT	HOURS	EQUIPMENT	HOURS

LABOR

NAME	OCCUPATION	START TIME:	STOP TIME:	HOURS
Sonny Patat	Foreman	6:30	5:00	10
Brian Fleming	Laborer	9:00	4:00	6.5
James Ford	Laborer	6:30	5:00	10
Dewayne Adamson	Laborer	6:30	5:00	10
			Total Crew Hours for Today:	36.5
			Total Crew Hours Cumulative:	338.5

Details of Hauling/ Weight ticket # and tons

TRUCK	WEIGHT TICKET # / TONS	LOAD COUNT	ORIGIN	DESTINATION

Weather Report

Solutia OU-3 Remediation Action

Construction Daily Work Report

Day # _____

Project Number/Name:	OU-3
Safety Meeting Topic:	Safety checks
Date:	2/11/16 Thursday

Activities/ Deliveries

Specific task working and or accomplished today:

20 loads of screened dirt hauled to the pcb cell. 340' of armor shield put down on the north side of the pcb cell. (2040 sq ft of fabric) Got all the top soil down waiting on the final clip on the north west corner until the armor shiel is done. / Screened dirt and stock piled dirt at the borrow pit.

EQUIPMENT	HOURS	EQUIPMENT	HOURS
Rock Truck		Screen	10
270 track hoe	10	Bob cat	10
200 track hoe	10	Loader	10
Bob cat	10	D61 dozer	10

LABOR

NAME	OCCUPATION	START TIME:	STOP TIME:	HOURS
Tyler Hollis	Forman	6:30	4:30	10
Jonathan Tenney	Labor	6:30	4:30	10
Statlin Ponder	Labor	6:30	4:30	10
Ethan Howle	Labor	6:30	4:30	10
Frank Hollis	Labor	6:30	4:30	10
Matt Owen	Forman	6:30	4:30	10
Gary Murphy	Operator	6:30	4:30	10
Fence guys	4 guys	8:30	4:30	32
			Total Crew Hours for Today:	102
			Total Crew Hours Cumulative:	7987

Details of Hauling/ Weight ticket # and tons

TRUCK	WEIGHT TICKET # / TONS	LOAD COUNT	ORIGIN	DESTINATION
TC truck				
TC truck				
TC truck				
Jerry truck				
Jerry truck				
Teague truck				
Teague truck				
Benchmark truck				

Weather Report

Solutia OU-3 Remediation Action

Construction Daily Work Report

Day # _____

Project Number/Name:	Solutia OU-3 Groundwater
Safety Meeting Topic:	Safety Checks
Date:	Thursday 2/11/2016

Activities/ Deliveries

Specific task working and or accomplished today:

Digging up well piping

EQUIPMENT	HOURS	EQUIPMENT	HOURS

LABOR

NAME	OCCUPATION	START TIME:	STOP TIME:	HOURS
Sonny Patat	Foreman	6:30	5:00	10
James Ford	Laborer	6:30	5:00	10
Brian Fleming	Laborer	10:00	3:30	5
Dewayne Adamson	Laborer	6:30	5:00	10
			Total Crew Hours for Today:	35
			Total Crew Hours Cumulative:	373.5

Details of Hauling/ Weight ticket # and tons

TRUCK	WEIGHT TICKET # / TONS	LOAD COUNT	ORIGIN	DESTINATION

Weather Report

Solutia OU-3 Remediation Action

Construction Daily Work Report

Day # _____

Project Number/Name:	OU-3
Safety Meeting Topic:	Shore up for the rain
Date:	2/12/16 Friday

Activities/ Deliveries

Specific task working and or accomplished today:
Screened at stock piled dirt at the borrow pit. 126' of armor shield put down at the pcb cell. (756 sq ft of fabric)

EQUIPMENT	HOURS	EQUIPMENT	HOURS
Rock Truck		Screen	8
270 track hoe	8	Bob cat	8
200 track hoe	8	Loader	8
Bob cat	8	D61 dozer	8

LABOR

NAME	OCCUPATION	START TIME:	STOP TIME:	HOURS
Tyler Hollis	Forman	6:30	2:30	8
Jonathan Tenney	Labor	6:30	2:30	8
Statlin Ponder	Labor	6:30	2:30	8
Ethan Howle	Labor	6:30	2:30	8
Frank Hollis	Labor	6:30	2:30	8
Matt Owen	Forman	6:30	2:30	8
Gary Murphy	Operator	6:30	2:30	8
Fence guys	4 guys	8:30	2:30	24
			Total Crew Hours for Today:	80
			Total Crew Hours Cumulative:	8067

Details of Hauling/ Weight ticket # and tons

TRUCK	WEIGHT TICKET # / TONS	LOAD COUNT	ORIGIN	DESTINATION
TC truck				
TC truck				
TC truck				
Jerry truck				
Jerry truck				
Teague truck				
Teague truck				
Benchmark truck				

Weather Report

Solutia OU-3 Remediation Action

Construction Daily Work Report

Day # _____

Project Number/Name:	Solutia OU-3 Groundwater
Safety Meeting Topic:	Shore Up For Rain
Date:	Friday 2/12/2016

Activities/ Deliveries

Specific task working and or accomplished today:

Digging up well piping. Moved to Area "A" afer lunch

EQUIPMENT	HOURS	EQUIPMENT	HOURS

LABOR

NAME	OCCUPATION	START TIME:	STOP TIME:	HOURS
Sonny Patat	Foreman	6:30	4:00	9
James Ford	Laborer	6:30	4:00	9
Brian Fleming	Laborer	11:30	4:00	4.5
Dewayne Adamson	Laborer	6:30	4:00	9
			Total Crew Hours for Today:	31.5
			Total Crew Hours Cumulative:	405

Details of Hauling/ Weight ticket # and tons

TRUCK	WEIGHT TICKET # / TONS	LOAD COUNT	ORIGIN	DESTINATION

Weather Report

Solutia OU-3 Remediation Action

Construction Daily Work Report

Day # _____

Project Number/Name:	OU-3
Safety Meeting Topic:	Personal hygiene
Date:	2/13/16 Saturday

Activities/ Deliveries

Specific task working and or accomplished today:
Screened at stock piled dirt.

EQUIPMENT	HOURS	EQUIPMENT	HOURS
Rock Truck		Screen	8
270 track hoe	8	Bob cat	8
200 track hoe		Loader	8
Bob cat	8	D61 dozer	8

LABOR

NAME	OCCUPATION	START TIME:	STOP TIME:	HOURS
Tyler Hollis	Forman			
Jonathan Tenney	Labor	6:30	2:30	8
Statlin Ponder	Labor			
Ethan Howle	Labor			
Frank Hollis	Labor	6:30	2:30	8
Matt Owen	Forman	6:30	2:30	8
Gary Murphy	Operator			
Fence guys	4 guys			
			Total Crew Hours for Today:	24
			Total Crew Hours Cumulative:	8067

Details of Hauling/ Weight ticket # and tons

TRUCK	WEIGHT TICKET # / TONS	LOAD COUNT	ORIGIN	DESTINATION
TC truck				
TC truck				
TC truck				
Jerry truck				
Jerry truck				
Teague truck				
Teague truck				
Benchmark truck				

Weather Report

Solutia OU-3 Remediation Action

Construction Daily Work Report

Day # _____

Project Number/Name:	Solutia OU-3 Groundwater
Safety Meeting Topic:	Personal Hygiene
Date:	Saturday 2/13/2016

Activities/ Deliveries

Specific task working and or accomplished today:

Grading in Area "A"

EQUIPMENT	HOURS	EQUIPMENT	HOURS

LABOR

NAME	OCCUPATION	START TIME:	STOP TIME:	HOURS
Sonny Patat	Foreman	6:30	2:30	7.5
Brian Fleming	Laborer	6:30	2:30	7.5
Dewayne Adamson	Laborer	6:30	2:30	7.5
D'Andre Bonds	Temp Laborer	6:30	2:30	7.5
Frederick Sandlin	Temp Laborer	6:30	2:30	7.5
			Total Crew Hours for Today:	37.5
			Total Crew Hours Cumulative:	442.5

Details of Hauling/ Weight ticket # and tons

TRUCK	WEIGHT TICKET # / TONS	LOAD COUNT	ORIGIN	DESTINATION

Weather Report

Solutia OU-3 Remediation Action

Construction Daily Work Report

Day # _____

Project Number/Name:	OU-3
Safety Meeting Topic:	Rain hazards
Date:	2/15/16 Monday

Activities/ Deliveries

Specific task working and or accomplished today:
Dressed up and got ready for the rain. Rained out.

EQUIPMENT	HOURS	EQUIPMENT	HOURS
Rock Truck		Screen	
270 track hoe	2	Bob cat	
200 track hoe	2	Loader	
Bob cat	2	D61 dozer	2

LABOR

NAME	OCCUPATION	START TIME:	STOP TIME:	HOURS
Tyler Hollis	Forman	6:30	10:30	4
Jonathan Tenney	Labor	6:30	10:30	4
Statlin Ponder	Labor	6:30	10:30	4
Ethan Howle	Labor	6:30	10:30	4
Frank Hollis	Labor	6:30	10:30	4
Matt Owen	Forman	6:30	10:30	4
Gary Murphy	Operator	6:30	10:30	4
Fence guys	4 guys			
			Total Crew Hours for Today:	28
			Total Crew Hours Cumulative:	8095

Details of Hauling/ Weight ticket # and tons

TRUCK	WEIGHT TICKET # / TONS	LOAD COUNT	ORIGIN	DESTINATION
TC truck				
TC truck				
TC truck				
Jerry truck				
Jerry truck				
Teague truck				
Teague truck				
Benchmark truck				

Weather Report

Solutia OU-3 Remediation Action

Construction Daily Work Report

Day # _____

Project Number/Name:	Solutia OU-3 Groundwater
Safety Meeting Topic:	Rain/ Excavation in Plant
Date:	Monday 2/15/2016

Activities/ Deliveries

Specific task working and or accomplished today:

Setting up for dig by tank inside plant area

EQUIPMENT	HOURS	EQUIPMENT	HOURS
F250 Pickup	4		

LABOR

NAME	OCCUPATION	START TIME:	STOP TIME:	HOURS
Sonny Patat	Foreman	6:30	10:30	4
James Ford	Laborer	6:30	10:30	4
Brian Fleming	Laborer	6:30	10:30	4
Dewayne Adamson	Laborer	8:30	10:30	2
Lane Parson	Laborer	6:30	10:30	4
D'Andre Bonds	Temp Laborer	6:30	10:30	4
			Total Crew Hours for Today:	22
			Total Crew Hours Cumulative:	464.5

Details of Hauling/ Weight ticket # and tons

TRUCK	WEIGHT TICKET # / TONS	LOAD COUNT	ORIGIN	DESTINATION

Weather Report

Rained Out

Solutia OU-3 Remediation Action

Construction Daily Work Report

Day # _____

Project Number/Name:	OU-3
Safety Meeting Topic:	Spill control
Date:	2/16/16 Tuesday

Activities/ Deliveries

Specific task working and or accomplished today:
Dug out and graded for concrete pad at the western most vault in area A. / Done equipment maintenance.

EQUIPMENT	HOURS	EQUIPMENT	HOURS
Mini hoe	8	Screen	
270 track hoe		Bob cat	
200 track hoe		Loader	
Bob cat	8	D61 dozer	

LABOR

NAME	OCCUPATION	START TIME:	STOP TIME:	HOURS
Tyler Hollis	Forman	6:30	4:00	9.5
Jonathan Tenney	Labor	VC		
Statlin Ponder	Labor	6:30	4:00	9.5
Ethan Howle	Labor	6:30	4:00	9.5
Frank Hollis	Labor	6:30	4:00	9.5
Matt Owen	Forman	6:30	4:00	9.5
Gary Murphy	Operator	6:30	4:00	9.5
Fence guys	4 guys			
			Total Crew Hours for Today:	57
			Total Crew Hours Cumulative:	8152

Details of Hauling/ Weight ticket # and tons

TRUCK	WEIGHT TICKET # / TONS	LOAD COUNT	ORIGIN	DESTINATION
TC truck				
TC truck				
TC truck				
Jerry truck				
Jerry truck				
Teague truck				
Teague truck				
Benchmark truck				

Weather Report

Solutia OU-3 Remediation Action

Construction Daily Work Report

Day # _____

Project Number/Name:	Solutia OU-3 Groundwater
Safety Meeting Topic:	Accidental Release/ Spill Control
Date:	Tuesday 2/16/2016

Activities/ Deliveries

Specific task working and or accomplished today:

Digging by tank inside plant area

EQUIPMENT	HOURS	EQUIPMENT	HOURS
F250 Pickup	9		
Vermeer CX234	5.5		
Water Truck	1		

LABOR

NAME	OCCUPATION	START TIME:	STOP TIME:	HOURS
Sonny Patat	Foreman	6:30	4:00	9
James Ford	Laborer	0:00	0:00	0
Brian Fleming	Laborer	6:30	2:30	7.5
Dewayne Adamson	Laborer	6:30	2:30	7.5
Lane Parson	Laborer	7:00	4:00	8.5
D'Andre Bonds	Temp Laborer	6:30	4:00	9
			Total Crew Hours for Today:	41.5
			Total Crew Hours Cumulative:	506

Details of Hauling/ Weight ticket # and tons

TRUCK	WEIGHT TICKET # / TONS	LOAD COUNT	ORIGIN	DESTINATION

Weather Report

Solutia OU-3 Remediation Action

Construction Daily Work Report

Day # _____

Project Number/Name:	OU-3
Safety Meeting Topic:	Decon procedures
Date:	2/17/16 Wednesday

Activities/ Deliveries

Specific task working and or accomplished today:
Finished up pad around the west vault in are A. Dug the footer for the wall around the back side of the west vault. Put in a 2" drain into the side of the inlet beside the vault.

EQUIPMENT	HOURS	EQUIPMENT	HOURS
Mini hoe	8	Screen	
270 track hoe		Bob cat	
200 track hoe		Loader	
Bob cat	8	D61 dozer	

LABOR

NAME	OCCUPATION	START TIME:	STOP TIME:	HOURS
Tyler Hollis	Forman	6:30	4:30	10
Jonathan Tenney	Labor	6:30	4:30	10
Statlin Ponder	Labor	6:30	4:30	10
Ethan Howle	Labor	6:30	4:30	10
Frank Hollis	Labor			
Matt Owen	Forman			
Gary Murphy	Operator			
Fence guys	4 guys			
			Total Crew Hours for Today:	40
			Total Crew Hours Cumulative:	8192

Details of Hauling/ Weight ticket # and tons

TRUCK	WEIGHT TICKET # / TONS	LOAD COUNT	ORIGIN	DESTINATION
TC truck				
TC truck				
TC truck				
Jerry truck				
Jerry truck				
Teague truck				
Teague truck				
Benchmark truck				

Weather Report

Solutia OU-3 Remediation Action

Construction Daily Work Report

Day # _____

Project Number/Name:	Ground Water
Safety Meeting Topic:	Decon procedures
Date:	2/17/16 Wednesday

Activities/ Deliveries

Specific task working and or accomplished today:
Started building the pad for the tanks. (1500 sq ft of fabric) Started repairing the road down to the tanks. (975 sq ft of fabric). 3 loads of DGA 1 loads of surge stone.

EQUIPMENT	HOURS	EQUIPMENT	HOURS
Rock truck	5	Screen	
270 track hoe	8	Bob cat	
200 track hoe		Loader	3
Bob cat		D61 dozer	8

LABOR

NAME	OCCUPATION	START TIME:	STOP TIME:	HOURS
Tyler Hollis	Forman			
Jonathan Tenney	Labor			
Statlin Ponder	Labor			
Ethan Howle	Labor			
Frank Hollis	Labor	6:30	4:30	10
Matt Owen	Forman	6:30	4:30	10
Gary Murphy	Operator	6:30	4:30	10
Fence guys	4 guys			
			Total Crew Hours for Today:	30
			Total Crew Hours Cumulative:	30

Details of Hauling/ Weight ticket # and tons

TRUCK	WEIGHT TICKET # / TONS	LOAD COUNT	ORIGIN	DESTINATION
TC truck	DGA	3	Vulcan	South land fill road
TC truck	Surge stone	1	Vulcan	South land fill road
TC truck				
Jerry truck				
Jerry truck				
Teague truck				
Teague truck				
Benchmark truck				

Weather Report

Solutia OU-3 Remediation Action

Construction Daily Work Report

Day # _____

Project Number/Name:	OU-3
Safety Meeting Topic:	Decon procedures
Date:	2/18/16 Thursday

Activities/ Deliveries

Specific task working and or accomplished today:
Raised a 2" pipe on the west vault in area A./ Put down 210' of armor shield (1260 sq ft of fabric)/ Started back screening dirt to stock pile.

EQUIPMENT	HOURS	EQUIPMENT	HOURS
Mini hoe		Screen	8
270 track hoe	8	Bob cat	8
200 track hoe	8	Loader	8
Bob cat	8	D61 dozer	2

LABOR

NAME	OCCUPATION	START TIME:	STOP TIME:	HOURS
Tyler Hollis	Forman	2:30	4:30	2
Jonathan Tenney	Labor	6:30	4:30	10
Statlin Ponder	Labor	6:30	4:30	10
Ethan Howle	Labor	6:30	4:30	10
Frank Hollis	Labor	6:30	4:30	10
Matt Owen	Forman	6:30	4:30	10
Gary Murphy	Operator	6:30	4:30	10
Fence guys	4 guys	11:00	4:30	22
			Total Crew Hours for Today:	84
			Total Crew Hours Cumulative:	8276

Details of Hauling/ Weight ticket # and tons

TRUCK	WEIGHT TICKET # / TONS	LOAD COUNT	ORIGIN	DESTINATION
TC truck				
TC truck				
TC truck				
Jerry truck				
Jerry truck				
Teague truck				
Teague truck				
Benchmark truck				

Weather Report

Solutia OU-3 Remediation Action

Construction Daily Work Report

Day # _____

Project Number/Name:	Solutia OU-3 Groundwater
Safety Meeting Topic:	Permitting
Date:	Thursday 2/18/2016

Activities/ Deliveries

Specific task working and or accomplished today:

Testing Groundwater lines. Began piping up for the tie in to tanks.

EQUIPMENT	HOURS	EQUIPMENT	HOURS
F250 Pickup	9.5		
Water Truck	2.5		

LABOR

NAME	OCCUPATION	START TIME:	STOP TIME:	HOURS
Sonny Patat	Foreman	6:30	4:30	9.5
James Ford	Laborer	6:30	4:30	9.5
Brian Fleming	Laborer	6:30	3:00	8
Lane Parson	Laborer	6:30	4:30	9.5
D'Andre Bonds	Temp Laborer	6:30	4:30	9.5
			Total Crew Hours for Today:	46
			Total Crew Hours Cumulative:	593.5

Details of Hauling/ Weight ticket # and tons

TRUCK	WEIGHT TICKET # / TONS	LOAD COUNT	ORIGIN	DESTINATION

Weather Report

Solutia OU-3 Remediation Action

Construction Daily Work Report

Day # _____

Project Number/Name:	Solutia OU-3 Groundwater
Safety Meeting Topic:	PPE/ Quiz/ Talking Points
Date:	2/19/2016

Activities/ Deliveries

Specific task working and or accomplished today:

Piping up Frac Tanks, Cutting in valve at manifold

EQUIPMENT	HOURS	EQUIPMENT	HOURS
F250 Pickup	9.5		
Water Truck	2		

LABOR

NAME	OCCUPATION	START TIME:	STOP TIME:	HOURS
Sonny Patat	Foreman	6:30	4:30	9.5
James Ford	Laborer	6:30	4:30	9.5
Brian Fleming	Laborer	6:30	4:30	9.5
Lane Parson	Laborer	6:30	4:30	9.5
D'Andre Bonds	Temp Laborer	6:30	4:30	9.5
			Total Crew Hours for Today:	47.5
			Total Crew Hours Cumulative:	641

Details of Hauling/ Weight ticket # and tons

TRUCK	WEIGHT TICKET # / TONS	LOAD COUNT	ORIGIN	DESTINATION

Weather Report

Solutia OU-3 Remediation Action

Construction Daily Work Report

Day # _____

Project Number/Name:	OU-3
Safety Meeting Topic:	Rigging/ Lifting
Date:	2/19/16 Friday

Activities/ Deliveries

Specific task working and or accomplished today:

Screened dirt/ Started putting in DGA road on the PCB cell. 29 loads of DGA stock piled at PCB cell. 280' of DGA road put in (1680 sq ft of fabric) 150' of armor shield put up the west side of the cell. (900 sq ft of fabric)

EQUIPMENT	HOURS	EQUIPMENT	HOURS
Mini hoe		Screen	10
270 track hoe	10	Bob cat	10
200 track hoe	10	Loader	10
Bob cat	10	D61 dozer	10

LABOR

NAME	OCCUPATION	START TIME:	STOP TIME:	HOURS
Tyler Hollis	Forman			
Jonathan Tenney	Labor	6:30	4:30	10
Statlin Ponder	Labor	6:30	4:30	10
Ethan Howle	Labor	6:30	4:30	10
Frank Hollis	Labor	6:30	4:30	10
Matt Owen	Forman	6:30	4:30	10
Gary Murphy	Operator	6:30	4:30	10
Fence guys	4 guys			
			Total Crew Hours for Today:	60
			Total Crew Hours Cumulative:	8252

Details of Hauling/ Weight ticket # and tons

TRUCK	WEIGHT TICKET # / TONS	LOAD COUNT	Origin	DESTINATION
TC truck	DGA	14	Vulcan	PCB cell
TC truck	DGA	15	Vulcan	PCB cell
TC truck				
Jerry truck				
Jerry truck				
Teague truck				
Teague truck				
Benchmark truck				

Weather Report

Sunny, 65 Deg

Tyler Hollis

Solutia OU-3 Remediation Action

Construction Daily Work Report

Day # _____

Project Number/Name:	OU-3
Safety Meeting Topic:	PPE
Date:	2/20/16 Saturday

Activities/ Deliveries

Specific task working and or accomplished today:
140' more feet of the DGA road on the cell./ Screened dirt and got everything ready for the rain.

EQUIPMENT	HOURS	EQUIPMENT	HOURS
31 dozer	8	Screen	8
270 track hoe	8	Bob cat	8
200 track hoe	8	Loader	8
Bob cat	8	D61 dozer	8

LABOR

NAME	OCCUPATION	START TIME:	STOP TIME:	HOURS
Tyler Hollis	Forman	6:30	2:30	8
Jonathan Tenney	Labor	6:30	2:30	8
Statlin Ponder	Labor	6:30	2:30	8
Ethan Howle	Labor	6:30	2:30	8
Frank Hollis	Labor	6:30	2:30	8
Matt Owen	Forman	6:30	2:30	8
Gary Murphy	Operator	6:30	2:30	8
Fence guys	4 guys	6:30	2:30	8
			Total Crew Hours for Today:	64
			Total Crew Hours Cumulative:	8316

Details of Hauling/ Weight ticket # and tons

TRUCK	WEIGHT TICKET # / TONS	LOAD COUNT	Origin	DESTINATION
TC truck				
TC truck				
TC truck				
Jerry truck				
Jerry truck				
Teague truck				
Teague truck				
Benchmark truck				

Weather Report

Solutia OU-3 Remediation Action

Construction Daily Work Report

Day # _____

Project Number/Name:	OU-3
Safety Meeting Topic:	Traffic routes
Date:	3/1/16 Tuesday

Activities/ Deliveries

Specific task working and or accomplished today:
29 loads of screened dirt hauled to area A to start the 6" sup grade prep. Grass works grassed and Hayed more of the pcb cell.

EQUIPMENT	HOURS	EQUIPMENT	HOURS
Sheet foot roller	8	Screen	8
270 track hoe	8	Bob cat	
200 track hoe	8	Loader	8
Bob cat	8	D61 dozer	8

LABOR

NAME	OCCUPATION	START TIME:	STOP TIME:	HOURS
Tyler Hollis	Forman	6:30	4:30	10
Jonathan Tenney	Labor	6:30	4:30	10
Statlin Ponder	Labor	6:30	4:30	10
Ethan Howle	Labor	6:30	4:30	10
Temp worker				
Matt Owen	Forman	6:30	4:30	10
Gary Murphy	Operator	6:30	4:30	10
Fence guys	4 guys			
			Total Crew Hours for Today:	60
			Total Crew Hours Cumulative:	8687

Details of Hauling/ Weight ticket # and tons

TRUCK	WEIGHT TICKET # / TONS	LOAD COUNT	Origin	DESTINATION
TC truck	24 stone	1	McCartney	Construction entrance pad
TC truck	24 stone	1	McCartney	Construction entrance pad
TC truck				
Jerry truck				
Jerry truck				
Teague truck				
Teague truck				
Benchmark truck				

Weather Report

Tyler Hollis

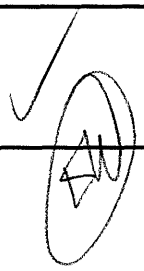

Solutia OU-3 Remediation Action

Construction Daily Work Report

Day # _____

Project Number/Name:	OU-3
Safety Meeting Topic:	Overhead utility's
Date:	3/2/16 Wednesday

Activities/ Deliveries

Specific task working and or accomplished today:
Too wet to haul dirt. Done maintenance on the screen.

EQUIPMENT	HOURS	EQUIPMENT	HOURS
Sheet foot roller		Screen	
270 track hoe		Bob cat	
200 track hoe		Loader	
Bob cat		D61 dozer	

LABOR

NAME	OCCUPATION	START TIME:	STOP TIME:	HOURS
Tyler Hollis	Forman	6:30	2:30	8
Jonathan Tenney	Labor	6:30	2:30	8
Statlin Ponder	Labor	6:30	2:30	8
Ethan Howle	Labor	6:30	2:30	8
Temp worker	Labor	6:30	2:30	8
Matt Owen	Forman	6:30	2:30	8
Fence guys	4 guys			
			Total Crew Hours for Today:	48
			Total Crew Hours Cumulative:	8735

Details of Hauling/ Weight ticket # and tons

TRUCK	WEIGHT TICKET # / TONS	LOAD COUNT	Origin	DESTINATION
TC truck				
TC truck				
TC truck				
Jerry truck				
Jerry truck				
Teague truck				
Teague truck				
Benchmark truck				

Weather Report

Tyler Hollis

Solutia OU-3 Remediation Action

Construction Daily Work Report

Day # _____

Project Number/Name:	OU-3
Safety Meeting Topic:	Dust control
Date:	3/3/16 Thursday

Activities/ Deliveries

Specific task working and or accomplished today:
14 loads of dirt hauled to area A for 6" sup grade prep. Got rained out.

EQUIPMENT	HOURS	EQUIPMENT	HOURS
Sheet foot roller	3	Screen	3
270 track hoe	3	31 dozer	3
200 track hoe	3	Loader	3
Bob cat		D61 dozer	3

LABOR

NAME	OCCUPATION	START TIME:	STOP TIME:	HOURS
Tyler Hollis	Forman	6:30	1:30	7
Jonathan Tenney	Labor	6:30	1:30	7
Statlin Ponder	Labor	6:30	10:30	4
Ethan Howle	Labor	6:30	10:30	4
Temp worker	Labor	6:30	10:30	4
Matt Owen	Forman	6:30	10:30	4
Fence guys	4 guys			
			Total Crew Hours for Today:	30
			Total Crew Hours Cumulative:	8765

Details of Hauling/ Weight ticket # and tons

TRUCK	WEIGHT TICKET # / TONS	LOAD COUNT	Origin	DESTINATION
TC truck				
TC truck				
TC truck				
Jerry truck				
Jerry truck				
Teague truck				
Teague truck				
Benchmark truck				

Weather Report

Tyler Hollis



Solutia OU-3 Remediation Action

Construction Daily Work Report

Day # _____

Project Number/Name:	OU-3
Safety Meeting Topic:	Flood preparedness
Date:	3/4/16 Friday

Activities/ Deliveries

Specific task working and or accomplished today:
To wet to haul dirt. Done equipment maintnance.

EQUIPMENT	HOURS	EQUIPMENT	HOURS
Sheet foot roller		Screen	
270 track hoe		31 dozer	
200 track hoe		Loader	
Bob cat		D61 dozer	

LABOR

NAME	OCCUPATION	START TIME:	STOP TIME:	HOURS
Tyler Hollis	Forman	6:30	11:00	4.5
Jonathan Tenney	Labor	6:30	11:00	4.5
Statlin Ponder	Labor	6:30	11:00	4.5
Ethan Howle	Labor	6:30	11:00	4.5
Temp worker	Labor	6:30	11:00	4.5
Matt Owen	Forman	6:30	11:00	4.5
Fence guys	4 guys			
			Total Crew Hours for Today:	27
			Total Crew Hours Cumulative:	8792

Details of Hauling/ Weight ticket # and tons

TRUCK	WEIGHT TICKET # / TONS	LOAD COUNT	Origin	DESTINATION
TC truck				
TC truck				
TC truck				
Jerry truck				
Jerry truck				
Teague truck				
Teague truck				
Benchmark truck				

Weather Report

Tyler Hollis



Solutia OU-3 Remediation Action

Construction Daily Work Report

Day # _____

Project Number/Name:	OU-3
Safety Meeting Topic:	Driver awareness
Date:	3/6/16 Sunday

Activities/ Deliveries

Specific task working and or accomplished today:
To wet to haul dirt. Bladed up borrow pit to dry.

EQUIPMENT	HOURS	EQUIPMENT	HOURS
Sheet foot roller		Screen	
270 track hoe		31 dozer	2
200 track hoe		Loader	
Bob cat		D61 dozer	

LABOR

NAME	OCCUPATION	START TIME:	STOP TIME:	HOURS
Tyler Hollis	Forman	6:30	11:00	4.5
Jonathan Tenney	Labor	6:30	11:00	4.5
Statlin Ponder	Labor	6:30	11:00	4.5
Ethan Howle	Labor	6:30	11:00	4.5
Temp worker	Labor	6:30	11:00	4.5
Matt Owen	Forman	6:30	11:00	4.5
Fence guys	4 guys			
			Total Crew Hours for Today:	27
			Total Crew Hours Cumulative:	8819

Details of Hauling/ Weight ticket # and tons

TRUCK	WEIGHT TICKET # / TONS	LOAD COUNT	Origin	DESTINATION
TC truck				
TC truck				
TC truck				
Jerry truck				
Jerry truck				
Teague truck				
Teague truck				
Benchmark truck				

Weather Report

Tyler Hollis

Solutia OU-3 Remediation Action

Construction Daily Work Report

Day # _____

Project Number/Name:	OU-3
Safety Meeting Topic:	Attitudes
Date:	3/7/16 Monday

Activities/ Deliveries

Specific task working and or accomplished today:
77 loads of screened dirt hauled to area A. Continued to screen dirt

EQUIPMENT	HOURS	EQUIPMENT	HOURS
Sheet foot roller	10	Screen	10
270 track hoe	10	31 dozer	10
200 track hoe	10	Loader	10
Bob cat	4	D61 dozer	10

LABOR

NAME	OCCUPATION	START TIME:	STOP TIME:	HOURS
Tyler Hollis	Forman	6:30	4:30	10
Jonathan Tenney	Labor	6:30	4:30	10
Statlin Ponder	Labor	6:30	4:30	10
Ethan Howle	Labor	6:30	4:30	10
Temp worker	Labor	6:30	4:30	10
Matt Owen	Forman	6:30	4:30	10
Fence guys	4 guys			
			Total Crew Hours for Today:	60
			Total Crew Hours Cumulative:	8879

Details of Hauling/ Weight ticket # and tons

TRUCK	WEIGHT TICKET # / TONS	LOAD COUNT	Origin	DESTINATION
TC truck				
TC truck				
TC truck				
Jerry truck				
Jerry truck				
Teague truck				
Teague truck				
Benchmark truck				

Weather Report

Tyler Hollis

Solutia OU-3 Remediation Action

Construction Daily Work Report

Day # _____

Project Number/Name:	OU-3
Safety Meeting Topic:	Hazardness awareness
Date:	3/8/16 Tuesday

Activities/ Deliveries

Specific task working and or accomplished today:
70 loads of screened dirt hauled to area A for the 6" sup grade prep. Screened dirt.

EQUIPMENT	HOURS	EQUIPMENT	HOURS
Sheet foot roller	10	Screen	10
270 track hoe	10	31 dozer	10
200 track hoe	10	Loader	10
Bob cat	4	D61 dozer	10

LABOR

NAME	OCCUPATION	START TIME:	STOP TIME:	HOURS
Tyler Hollis	Forman	6:30	2:30	8
Jonathan Tenney	Labor	6:30	4:30	10
Statlin Ponder	Labor	6:30	4:30	10
Ethan Howle	Labor	6:30	4:30	10
Temp worker	Labor	6:30	4:30	10
Matt Owen	Forman	6:30	4:30	10
Chuck Hill	Operator	11:00	4:30	5.5
			Total Crew Hours for Today:	63.5
			Total Crew Hours Cumulative:	8942.5

Details of Hauling/ Weight ticket # and tons

TRUCK	WEIGHT TICKET # / TONS	LOAD COUNT	Origin	DESTINATION
TC truck				
TC truck				
TC truck				
Jerry truck				
Jerry truck				
Teague truck				
Teague truck				
Benchmark truck				

Weather Report

Tyler Hollis 

Solutia OU-3 Remediation Action

Construction Daily Work Report

Day # _____

Project Number/Name:	OU-3
Safety Meeting Topic:	Dust control
Date:	3/9/16 Wednesday

Activities/ Deliveries

Specific task working and or accomplished today:
50 loads of screened dirt hauled to area A for 6" sub grade prep. Screened dirt.

EQUIPMENT	HOURS	EQUIPMENT	HOURS
Sheet foot roller	10	Screen	10
270 track hoe	10	31 dozer	6
200 track hoe	10	Loader	10
Bob cat	4	D61 dozer	10

LABOR

NAME	OCCUPATION	START TIME:	STOP TIME:	HOURS
Tyler Hollis	Forman	Out for Funeral		
Jonathan Tenney	Labor	6:30	4:30	10
Statlin Ponder	Labor	6:30	4:30	10
Ethan Howle	Labor	6:30	4:30	10
Temp worker	Labor	6:30	4:30	10
Matt Owen	Forman	6:30	4:30	10
Chuck Hill	Operator	6:30	4:30	10
			Total Crew Hours for Today:	60
			Total Crew Hours Cumulative:	9002.5

Details of Hauling/ Weight ticket # and tons

TRUCK	WEIGHT TICKET # / TONS	LOAD COUNT	Origin	DESTINATION
TC truck				
TC truck				
TC truck				
Jerry truck				
Jerry truck				
Teague truck				
Teague truck				
Benchmark truck				

Weather Report

Tyler Hollis

Solutia OU-3 Remediation Action

Construction Daily Work Report **Day #** _____

Project Number/Name:	OU-3
Safety Meeting Topic:	Safety stand down
Date:	3/10/16 Thursday

Activities/ Deliveries

Specific task working and or accomplished today:
14 loads of screened dirt hauled to area A for 6" sub grade prep. Screened dirt. Bridged over soft spot in area A with 10 ounce fabric, 24 stone and DGA (2500 sq ft)

EQUIPMENT	HOURS	EQUIPMENT	HOURS
Sheet foot roller	10	Screen	10
270 track hoe	10	31 dozer	6
200 track hoe	10	Loader	10
Bob cat	4	D61 dozer	10

LABOR

NAME	OCCUPATION	START TIME:	STOP TIME:	HOURS
Tyler Hollis	Forman	6:30	4:30	10
Jonathan Tenney	Labor	6:30	4:30	10
Statlin Ponder	Labor	6:30	4:30	10
Ethan Howle	Labor	6:30	4:30	10
Temp worker	Labor	6:30	4:30	10
Matt Owen	Forman	6:30	4:30	10
			Total Crew Hours for Today:	60
			Total Crew Hours Cumulative:	9062.5

Details of Hauling/ Weight ticket # and tons

TRUCK	WEIGHT TICKET # / TONS	LOAD COUNT	Origin	DESTINATION
TC truck				
TC truck				
TC truck				
Jerry truck				
Jerry truck				
Teague truck				
Teague truck				
Benchmark truck				

Weather Report

Tyler Hollis

Solutia OU-3 Remediation Action

Construction Daily Work Report

Day # _____

Project Number/Name:	OU-3
Safety Meeting Topic:	Tarpping trucks
Date:	3/11/16 Friday

Activities/ Deliveries

Specific task working and or accomplished today:
To wet to haul dirt. Worked in area E cleaning up trash. Took measurements from the tope of the wall to find the tope of the 6" sup grade.

EQUIPMENT	HOURS	EQUIPMENT	HOURS
Sheet foot roller		Screen	
270 track hoe	8	31 dozer	8
200 track hoe		Loader	
Bob cat	8	D61 dozer	

LABOR

NAME	OCCUPATION	START TIME:	STOP TIME:	HOURS
Tyler Hollis	Forman	6:30	4:00	9.5
Jonathan Tenney	Labor	6:30	4:00	9.5
Statlin Ponder	Labor	6:30	4:00	9.5
Ethan Howle	Labor	6:30	4:00	9.5
Temp worker	Labor	6:30	4:00	9.5
Matt Owen	Forman	6:30	4:00	9.5
			Total Crew Hours for Today:	57
			Total Crew Hours Cumulative:	9119.5

Details of Hauling/ Weight ticket # and tons

TRUCK	WEIGHT TICKET # / TONS	LOAD COUNT	Origin	DESTINATION
TC truck				
TC truck				
TC truck				
Jerry truck				
Jerry truck				
Teague truck				
Teague truck				
Benchmark truck				

Weather Report

Tyler Hollis

Solutia OU-3 Remediation Action

Construction Daily Work Report

Day # _____

Project Number/Name:	OU-3
Safety Meeting Topic:	Loading and unloading equipment
Date:	3/15/16 Tuesday

Activities/ Deliveries

Specific task working and or accomplished today:
34 loads of screened material hauled to area E. Got all the dirt put in. Worked in area A with the motor grantor clipping the sup grade and rolling it in with the smooth drum. Screened dirt at the borrow pit. Motor grator 8hr

EQUIPMENT	HOURS	EQUIPMENT	HOURS
Sheet foot roller	8	Screen	10
270 track hoe	10	31 dozer	10
200 track hoe	10	Loader	10
Bob cat	10	Smooth drum	2

LABOR

NAME	OCCUPATION	START TIME:	STOP TIME:	HOURS
Tyler Hollis	Forman	6:30	4:30	10
Jonathan Tenney	Labor	6:30	4:30	10
Statlin Ponder	Labor	6:30	4:30	10
Ethan Howle	Labor	6:30	4:30	10
Temp worker	Labor	6:30	4:30	10
Matt Owen	Forman	6:30	4:30	10
Chuck Hill	Operator	6:30	4:30	10
PFF 7 guys		6:30	4:30	70
			Total Crew Hours for Today:	140
			Total Crew Hours Cumulative:	9313.5

Details of Hauling/ Weight ticket # and tons

TRUCK	WEIGHT TICKET # / TONS	LOAD COUNT	Origin	DESTINATION
TC truck				
TC truck				
TC truck				
Jerry truck				
Jerry truck				
Teague truck				
Teague truck				
Benchmark truck				

Weather Report

Tyler Hollis

Solutia OU-3 Remediation Action

Construction Daily Work Report

Day # _____

Project Number/Name:	OU-3
Safety Meeting Topic:	Hot work permits
Date:	3/14/16 Monday

Activities/ Deliveries

Specific task working and or accomplished today:
To wet to haul dirt. Fused up 125' of 10" & 8" poly pipe for the bores in area A. Worked on drying out borrow pit. Plowed up the grass in area E and set grade steaks. Cleaned the concrete off the poly lock in the wall in area E and chalked a line at grade around the bottom of the wall.

EQUIPMENT	HOURS	EQUIPMENT	HOURS
Sheet foot roller		Screen	
270 track hoe	8	31 dozer	8
200 track hoe		Loader	
Bob cat	8	D61 dozer	

LABOR

NAME	OCCUPATION	START TIME:	STOP TIME:	HOURS
Tyler Hollis	Forman	6:30	3:30	9
Jonathan Tenney	Labor	6:30	3:30	9
Statlin Ponder	Labor	6:30	3:30	9
Ethan Howle	Labor	6:30	3:30	9
Temp worker	Labor	6:30	3:30	9
Matt Owen	Forman	6:30	3:30	9
			Total Crew Hours for Today:	54
			Total Crew Hours Cumulative:	9173.5

Details of Hauling/ Weight ticket # and tons

TRUCK	WEIGHT TICKET # / TONS	LOAD COUNT	Origin	DESTINATION
TC truck				
TC truck				
TC truck				
Jerry truck				
Jerry truck				
Teague truck				
Teague truck				
Benchmark truck				

Weather Report

Tyler Hollis AW

Solutia OU-3 Remediation Action

Construction Daily Work Report

Day # _____

Project Number/Name:	OU-3
Safety Meeting Topic:	Security
Date:	3/16/16 Wednesday

Activities/ Deliveries

Specific task working and or accomplished today:
Worked in area E grading around the walls. Worked in area A finished up prep work for liner. PPF started putting down liner in area A. Screened dirt at the borrow pit.

EQUIPMENT	HOURS	EQUIPMENT	HOURS
Sheet foot roller		Screen	10
270 track hoe	10	31 dozer	
200 track hoe	10	Loader	10
Bob cat	10	Smooth drum	8

LABOR

NAME	OCCUPATION	START TIME:	STOP TIME:	HOURS
Tyler Hollis	Forman	6:30	4:30	10
Jonathan Tenney	Labor	6:30	4:30	10
Statlin Ponder	Labor	6:30	4:30	10
Ethan Howle	Labor	6:30	4:30	10
Temp worker	Labor	6:30	4:30	10
Matt Owen	Forman	6:30	4:30	10
Chuck Hill	Operator	6:30	12:00	5.5
PFF 7 guys		6:30	4:30	70
			Total Crew Hours for Today:	135.5
			Total Crew Hours Cumulative:	9449

Details of Hauling/ Weight ticket # and tons

TRUCK	WEIGHT TICKET # / TONS	LOAD COUNT	Origin	DESTINATION
TC truck				
TC truck				
TC truck				
Jerry truck				
Jerry truck				
Teague truck				
Teague truck				
Benchmark truck				

Weather Report

Tyler Hollis



Solutia OU-3 Remediation Action

Construction Daily Work Report

Day # _____

Project Number/Name:	OU-3
Safety Meeting Topic:	Dangers of being in a hurry
Date:	3/17/16 Thursday

Activities/ Deliveries

Specific task working and or accomplished today:
Finished grading around the wall in area E. Screened dirt. PFF continued putting down poly in area A.

EQUIPMENT	HOURS	EQUIPMENT	HOURS
Sheet foot roller		Screen	10
270 track hoe	10	31 dozer	
200 track hoe	10	Loader	10
Bob cat	10	Smooth drum	2

LABOR

NAME	OCCUPATION	START TIME:	STOP TIME:	HOURS
Tyler Hollis	Forman	6:30	4:30	10
Jonathan Tenney	Labor	6:30	4:30	10
Statlin Ponder	Labor	6:30	4:30	10
Ethan Howle	Labor	6:30	4:30	10
Temp worker	Labor	6:30	4:30	10
Matt Owen	Forman	6:30	4:30	10
PFF 7 guys		6:30	4:30	70
			Total Crew Hours for Today:	130
			Total Crew Hours Cumulative:	9579

Details of Hauling/ Weight ticket # and tons

TRUCK	WEIGHT TICKET # / TONS	LOAD COUNT	Origin	DESTINATION
TC truck				
TC truck				
TC truck				
Jerry truck				
Jerry truck				
Teague truck				
Teague truck				
Benchmark truck				

Weather Report

Tyler Hollis



Solutia OU-3 Remediation Action

Construction Daily Work Report

Day # _____

Project Number/Name:	OU-3
Safety Meeting Topic:	Electrical line clearance
Date:	3/18/16 Friday

Activities/ Deliveries

Specific task working and or accomplished today:
PFF got area A blacked out. Screened dirt.

EQUIPMENT	HOURS	EQUIPMENT	HOURS
Sheet foot roller		Screen	10
270 track hoe	10	31 dozer	10
200 track hoe	10	Loader	10
Bob cat		Smooth drum	

LABOR

NAME	OCCUPATION	START TIME:	STOP TIME:	HOURS
Tyler Hollis	Forman	6:30	4:30	10
Jonathan Tenney	Labor	6:30	4:30	10
Statlin Ponder	Labor	6:30	4:30	10
Ethan Howle	Labor	6:30	4:30	10
Temp worker	Labor	6:30	4:30	10
Matt Owen	Forman	6:30	4:30	10
PFF 7 guys		6:30	4:30	70
			Total Crew Hours for Today:	130
			Total Crew Hours Cumulative:	9709

Details of Hauling/ Weight ticket # and tons

TRUCK	WEIGHT TICKET # / TONS	LOAD COUNT	Origin	DESTINATION
TC truck				
TC truck				
TC truck				
Jerry truck				
Jerry truck				
Teague truck				
Teague truck				
Benchmark truck				

Weather Report

Tyler Hollis

Solutia OU-3 Remediation Action

Construction Daily Work Report

Day # _____

Project Number/Name:	OU-3
Safety Meeting Topic:	Hydration
Date:	3/19/16 Saturday

Activities/ Deliveries

Specific task working and or accomplished today:
Screened dirt.

EQUIPMENT	HOURS	EQUIPMENT	HOURS
Sheet foot roller		Screen	8
270 track hoe	8	31 dozer	8
200 track hoe	8	Loader	8
Bob cat		Smooth drum	

LABOR

NAME	OCCUPATION	START TIME:	STOP TIME:	HOURS
Tyler Hollis	Forman	6:30	2:30	8
Jonathan Tenney	Labor	6:30	2:30	8
Statlin Ponder	Labor	6:30	2:30	8
Ethan Howle	Labor	6:30	2:30	8
Temp worker	Labor	6:30	2:30	8
Matt Owen	Forman			
PFF 7 guys				
			Total Crew Hours for Today:	40
			Total Crew Hours Cumulative:	9749

Details of Hauling/ Weight ticket # and tons

TRUCK	WEIGHT TICKET # / TONS	LOAD COUNT	Origin	DESTINATION
TC truck				
TC truck				
TC truck				
Jerry truck				
Jerry truck				
Teague truck				
Teague truck				
Benchmark truck				

Weather Report

Tyler Hollis



Solutia OU-3 Remediation Action

Construction Daily Work Report

Day # _____

Project Number/Name:	OU-3
Safety Meeting Topic:	Hydration
Date:	3/20/16 Sunday

Activities/ Deliveries

Specific task working and or accomplished today:
Screened dirt.

EQUIPMENT	HOURS	EQUIPMENT	HOURS
Sheet foot roller		Screen	3
270 track hoe	3	31 dozer	3
200 track hoe	3	Loader	3
Bob cat		Smooth drum	

LABOR

NAME	OCCUPATION	START TIME:	STOP TIME:	HOURS
Tyler Hollis	Forman	6:30	10:00	3.5
Jonathan Tenney	Labor	6:30	10:00	3.5
Statlin Ponder	Labor	6:30	10:00	3.5
Ethan Howle	Labor	6:30	10:00	3.5
Temp worker	Labor	6:30	10:00	3.5
Matt Owen	Forman			
PFF 7 guys		6:30	4:00	66.5
			Total Crew Hours for Today:	84
			Total Crew Hours Cumulative:	9833

Details of Hauling/ Weight ticket # and tons

TRUCK	WEIGHT TICKET # / TONS	LOAD COUNT	Origin	DESTINATION
TC truck				
TC truck				
TC truck				
Jerry truck				
Jerry truck				
Teague truck				
Teague truck				
Benchmark truck				

Weather Report

Tyler Hollis

Solutia OU-3 Remediation Action

Construction Daily Work Report

Day # _____

Project Number/Name:	OU-3
Safety Meeting Topic:	Fatigue
Date:	3/21/16 Monday

Activities/ Deliveries

Specific task working and or accomplished today:
Started the cut down at the sediment pond. Hauled the dirt to the screen.Continued stock piling screened material. / PFF is still working on the liner in area A.

EQUIPMENT	HOURS	EQUIPMENT	HOURS
Sheet foot roller		Screen	8
270 track hoe	8	31 dozer	8
200 track hoe	8	Loader	8
Rock truck	8	Smooth drum	

LABOR

NAME	OCCUPATION	START TIME:	STOP TIME:	HOURS
Tyler Hollis	Forman	6:30	4:00	9.5
Jonathan Tenney	Labor	6:30	4:00	9.5
Statlin Ponder	Labor	6:30	4:00	9.5
Ethan Howle	Labor	6:30	3:00	Fort McClellan 8.5
Jeremy Hurst	Labor	6:30	4:00	9.5
Matt Owen	Forman	6:30	4:00	9.5
PFF 7 guys		6:30	4:30	70
			Total Crew Hours for Today:	117.5
			Total Crew Hours Cumulative:	9903

Details of Hauling/ Weight ticket # and tons

TRUCK	WEIGHT TICKET # / TONS	LOAD COUNT	Origin	DESTINATION
TC truck				
TC truck				
TC truck				
Jerry truck				
Jerry truck				
Teague truck				
Teague truck				
Benchmark truck				

Weather Report

Tyler Hollis

Solutia OU-3 Remediation Action

Construction Daily Work Report

Day # _____

Project Number/Name:	OU-3
Safety Meeting Topic:	Situational awareness
Date:	3/22/16 Tuesday

Activities/ Deliveries

Specific task working and or accomplished today:
Hauled the to the screen.Continued stock piling screened material. / PFF is still working on the liner in area A.

EQUIPMENT	HOURS	EQUIPMENT	HOURS
Sheet foot roller		Screen	10
270 track hoe	10	31 dozer	10
200 track hoe	10	Loader	10
Rock truck	10	Smooth drum	

LABOR

NAME	OCCUPATION	START TIME:	STOP TIME:	HOURS
Tyler Hollis	Forman	6:30	4:30	10
Jonathan Tenney	Labor	6:30	4:30	10
Statlin Ponder	Labor	6:30	4:30	10
Ethan Howle	Labor	6:30	3:30	Fort McClellan 9
Jeremy Hurst	Labor	6:30	4:30	10
Matt Owen	Forman	6:30	4:30	10
PFF 7 guys		6:30	4:30	70
			Total Crew Hours for Today:	120
			Total Crew Hours Cumulative:	10023

Details of Hauling/ Weight ticket # and tons

TRUCK	WEIGHT TICKET # / TONS	LOAD COUNT	Origin	DESTINATION
TC truck				
TC truck				
TC truck				
Jerry truck				
Jerry truck				
Teague truck				
Teague truck				
Benchmark truck				

Weather Report

Tyler Hollis



Solutia OU-3 Remediation Action

Construction Daily Work Report

Day # _____

Project Number/Name:	OU-3
Safety Meeting Topic:	Plant Traffic
Date:	3/23/16 Wednesday

Activities/ Deliveries

Specific task working and or accomplished today:
Hauled the to the screen.Continued stock piling screened material. / PFF started putting down liner in Area E.

EQUIPMENT	HOURS	EQUIPMENT	HOURS
Sheet foot roller		Screen	10
270 track hoe	10	31 dozer	10
200 track hoe	10	Loader	10
Rock truck	10	Smooth drum	

LABOR

NAME	OCCUPATION	START TIME:	STOP TIME:	HOURS
Tyler Hollis	Forman	6:30	5:00	10.5
Jonathan Tenney	Labor	6:30	5:00	10.5
Statlin Ponder	Labor	6:30	5:00	10.5
Ethan Howle	Labor	6:30	4:00	Fort McClellan 9.5
Jeremy Hurst	Labor	6:30	5:00	10.5
Matt Owen	Forman	6:30	5:00	10.5
PFF 7 guys		6:30	4:30	70
			Total Crew Hours for Today:	122.5
			Total Crew Hours Cumulative:	10145.5

Details of Hauling/ Weight ticket # and tons

TRUCK	WEIGHT TICKET # / TONS	LOAD COUNT	Origin	DESTINATION
TC truck				
TC truck				
TC truck				
Jerry truck				
Jerry truck				
Teague truck				
Teague truck				
Benchmark truck				

Weather Report

Tyler Hollis



Solutia OU-3 Remediation Action

Construction Daily Work Report

Day # _____

Project Number/Name:	OU-3
Safety Meeting Topic:	Plant traffic
Date:	3/24/16 Thursday

Activities/ Deliveries

Specific task working and or accomplished today:
Hauled to the screen.Continued stock piling screened material. / PFF started putting down liner in Area E. Got rained out.

EQUIPMENT	HOURS	EQUIPMENT	HOURS
Sheet foot roller		Screen	8
270 track hoe	8	31 dozer	8
200 track hoe	8	Loader	8
Rock truck	8	Smooth drum	

LABOR

NAME	OCCUPATION	START TIME:	STOP TIME:	HOURS
Tyler Hollis	Forman	6:30	2:30	8
Jonathan Tenney	Labor	6:30	2:30	8
Statlin Ponder	Labor	6:30	2:30	8
Ethan Howle	Labor	6:30	1:30	Fort McClellan 7
Jeremy Hurst	Labor	6:30	2:30	8
Matt Owen	Forman	6:30	2:30	8
PFF 7 guys		6:30	2:30	56
			Total Crew Hours for Today:	96
			Total Crew Hours Cumulative:	10241.5

Details of Hauling/ Weight ticket # and tons

TRUCK	WEIGHT TICKET # / TONS	LOAD COUNT	Origin	DESTINATION
TC truck				
TC truck				
TC truck				
Jerry truck				
Jerry truck				
Teague truck				
Teague truck				
Benchmark truck				

Weather Report

Tyler Hollis

Solutia OU-3 Remediation Action

Construction Daily Work Report

Day # _____

Project Number/Name:	OU-3
Safety Meeting Topic:	Emergency prepareness
Date:	3/25/16 Friday

Activities/ Deliveries

Specific task working and or accomplished today:
PFF putting down liner in Area E. Got rained out.

EQUIPMENT	HOURS	EQUIPMENT	HOURS
Sheet foot roller		Screen	
270 track hoe		31 dozer	
200 track hoe		Loader	
Rock truck		Smooth drum	

LABOR

NAME	OCCUPATION	START TIME:	STOP TIME:	HOURS
Tyler Hollis	Forman			
Jonathan Tenney	Labor			
Statlin Ponder	Labor			
Ethan Howle	Labor	6:30	2:30	Fort McClellan 8
Jeremy Hurst	Labor			
Matt Owen	Forman	6:30	2:30	8
PFF 7 guys		6:30	2:30	56
			Total Crew Hours for Today:	64
			Total Crew Hours Cumulative:	10305.5

Details of Hauling/ Weight ticket # and tons

TRUCK	WEIGHT TICKET # / TONS	LOAD COUNT	Origin	DESTINATION
TC truck				
TC truck				
TC truck				
Jerry truck				
Jerry truck				
Teague truck				
Teague truck				
Benchmark truck				

Weather Report

Tyler Hollis

Solutia OU-3 Remediation Action

Construction Daily Work Report

Day # _____

Project Number/Name:	OU-3
Safety Meeting Topic:	Slips trips and falls
Date:	3/28/16 Monday

Activities/ Deliveries

Specific task working and or accomplished today:
Located AT&T line and gas line on the north side of area A for the bore. Inspected a man hole on the north side of property. Cut the fence on the north side of the property to install a gate.

EQUIPMENT	HOURS	EQUIPMENT	HOURS
Sheet foot roller		Screen	
270 track hoe		31 dozer	
200 track hoe		Loader	8
Rock truck		Mini hoe	8

LABOR

NAME	OCCUPATION	START TIME:	STOP TIME:	HOURS
Tyler Hollis	Forman	6:30	4:00	9.5
Jonathan Tenney	Labor	6:30	4:00	9.5
Statlin Ponder	Labor	6:30	4:00	9.5
Ethan Howle	Labor	6:30	4:00	Fort McClellan 9.5
Jeremy Hurst	Labor	6:30	2:30	8
Matt Owen	Forman	6:30	4:00	9.5
PFF 7 guys		6:30	4:00	66.5
			Total Crew Hours for Today:	112.5
			Total Crew Hours Cumulative:	10418

Details of Hauling/ Weight ticket # and tons

TRUCK	WEIGHT TICKET # / TONS	LOAD COUNT	Origin	DESTINATION
TC truck				
TC truck				
TC truck				
Jerry truck				
Jerry truck				
Teague truck				
Teague truck				
Benchmark truck				

Weather Report

Tyler Hollis

Solutia OU-3 Remediation Action

Construction Daily Work Report

Day # _____

Project Number/Name:	OU-3
Safety Meeting Topic:	Over head lines
Date:	3/30/16 Wednesday

Activities/ Deliveries

Specific task working and or accomplished today:
Hauled 41 loads of screened material to area E for the cover soil. PFF started putting done geo composit in area A.

EQUIPMENT	HOURS	EQUIPMENT	HOURS
Sheet foot roller		Screen	
270 track hoe	10	31 dozer	10
200 track hoe	10	Loader	2
Rock truck		D 61 dozer	10

LABOR

NAME	OCCUPATION	START TIME:	STOP TIME:	HOURS
Tyler Hollis	Forman	6:30	5:00	10.5
Jonathan Tenney	Labor	6:30	5:00	10.5
Statlin Ponder	Labor	6:30	5:00	10.5
Ethan Howle	Labor	6:30	7:30	Fort McClellan 13
Daniel DeJesus	Labor	6:30	5:00	10.5
Matt Owen	Forman	6:30	5:00	10.5
PFF 7 guys		6:30	4:30	70
			Total Crew Hours for Today:	122.5
			Total Crew Hours Cumulative:	10702

Details of Hauling/ Weight ticket # and tons

TRUCK	WEIGHT TICKET # / TONS	LOAD COUNT	Origin	DESTINATION
TC truck				
TC truck				
TC truck				
Jerry truck				
Jerry truck				
Teague truck				
Teague truck				
Benchmark truck				

Weather Report

Tyler Hollis

Solutia OU-3 Remediation Action

Construction Daily Work Report

Day # _____

Project Number/Name:	OU-3
Safety Meeting Topic:	Wet Roads
Date:	3/31/16 Thursday

Activities/ Deliveries

Specific task working and or accomplished today:
Got everything ready for the rain. Rained out.

EQUIPMENT	HOURS	EQUIPMENT	HOURS
Sheet foot roller		Screen	
270 track hoe		31 dozer	2
200 track hoe		Loader	2
Rock truck		D 61 dozer	2

LABOR

NAME	OCCUPATION	START TIME:	STOP TIME:	HOURS
Tyler Hollis	Forman	6:30	1:00	6.5
Jonathan Tenney	Labor	6:30	11:00	4.5
Statlin Ponder	Labor	6:30	11:00	4.5
Ethan Howle	Labor	6:00	4:00	Fort McClellan 10
Daniel DeJesus	Labor	6:30	11:00	4.5
Matt Owen	Forman	6:30	11:00	4.5
PFF 7 guys		6:30	11:00	31.5
			Total Crew Hours for Today:	56
			Total Crew Hours Cumulative:	10758

Details of Hauling/ Weight ticket # and tons

TRUCK	WEIGHT TICKET # / TONS	LOAD COUNT	Origin	DESTINATION
TC truck				
TC truck				
TC truck				
Jerry truck				
Jerry truck				
Teague truck				
Teague truck				
Benchmark truck				

Weather Report

Tyler Hollis

Solutia OU-3 Remediation Action

Construction Daily Work Report **Day #** _____

Project Number/Name:	OU-3
Safety Meeting Topic:	Wet Roads
Date:	4/1/16 Friday

Activities/ Deliveries

Specific task working and or accomplished today:
Took hazmat refresher class. To wet to work in area E. PFF worked in area A.

EQUIPMENT	HOURS	EQUIPMENT	HOURS
Sheet foot roller		Screen	
270 track hoe		31 dozer	
200 track hoe		Loader	
Rock truck		D 61 dozer	

LABOR

NAME	OCCUPATION	START TIME:	STOP TIME:	HOURS
Tyler Hollis	Forman	6:30	2:30	8
Jonathan Tenney	Labor	6:30	2:30	8
Statlin Ponder	Labor	6:30	2:30	8
Ethan Howle	Labor	6:30	2:30	8
Daniel DeJesus	Labor	6:30	2:30	8
Matt Owen	Forman	6:30	2:30	8
PFF 7 guys		6:30	2:30	56
			Total Crew Hours for Today:	104
			Total Crew Hours Cumulative:	10862

Details of Hauling/ Weight ticket # and tons

TRUCK	WEIGHT TICKET # / TONS	LOAD COUNT	Origin	DESTINATION
TC truck				
TC truck				
TC truck				
Jerry truck				
Jerry truck				
Teague truck				
Teague truck				
Benchmark truck				

Weather Report

Tyler Hollis

Solutia OU-3 Remediation Action

Construction Daily Work Report **Day #** _____

Project Number/Name:	OU-3
Safety Meeting Topic:	Congested work area
Date:	4/4/16 Monday

Activities/ Deliveries

Specific task working and or accomplished today:
2 loads of screened dirt hauled to area E. Finished 1' lift on the north side of area E. Screened dirt in the borrow pit.

EQUIPMENT	HOURS	EQUIPMENT	HOURS
Sheet foot roller		Screen	10
270 track hoe	10	31 dozer	10
200 track hoe	10	Loader	
Rock truck		D 61 dozer	10

LABOR

NAME	OCCUPATION	START TIME:	STOP TIME:	HOURS
Tyler Hollis	Forman	6:30	4:30	10
Jonathan Tenney	Labor	6:30	4:30	10
Statlin Ponder	Labor	6:30	4:30	10
Ethan Howle	Labor	6:30	4:30	10
Daniel DeJesus	Labor	6:30	4:30	10
Matt Owen	Forman	6:30	4:30	10
			Total Crew Hours for Today:	60
			Total Crew Hours Cumulative:	10922

Details of Hauling/ Weight ticket # and tons

TRUCK	WEIGHT TICKET # / TONS	LOAD COUNT	Origin	DESTINATION
TC truck				
TC truck				
TC truck				
Jerry truck				
Jerry truck				
Teague truck				
Teague truck				
Benchmark truck				

Weather Report

Tyler Hollis

Solutia OU-3 Remediation Action

Construction Daily Work Report **Day #** _____

Project Number/Name:	OU-3
Safety Meeting Topic:	Accountability
Date:	4/5/16 Tuesday

Activities/ Deliveries

Specific task working and or accomplished today:
28 loads of top soil hauled to area E. Covered the north side of area E with 6" of top soil. Stock piled more top soil in area E for the south side. Got the borrow pit ready for the rain.

EQUIPMENT	HOURS	EQUIPMENT	HOURS
Bobcat	10	Screen	
270 track hoe		31 dozer	10
200 track hoe	10	Loader	
Rock truck		D 61 dozer	10

LABOR

NAME	OCCUPATION	START TIME:	STOP TIME:	HOURS
Tyler Hollis	Forman	6:30	5:00	10.5
Jonathan Tenney	Labor	6:30	5:00	10.5
Statlin Ponder	Labor	6:30	5:00	10.5
Ethan Howle	Labor	6:30	5:00	10.5
Daniel DeJesus	Labor	6:30	5:00	10.5
Matt Owen	Forman	6:30	5:00	10.5
			Total Crew Hours for Today:	63
			Total Crew Hours Cumulative:	10985

Details of Hauling/ Weight ticket # and tons

TRUCK	WEIGHT TICKET # / TONS	LOAD COUNT	Origin	DESTINATION
TC truck				
TC truck				
TC truck				
Jerry truck				
Jerry truck				
Teague truck				
Teague truck				
Benchmark truck				

Weather Report



Solutia OU-3 Remediation Action

Construction Daily Work Report **Day #** _____

Project Number/Name:	OU-3
Safety Meeting Topic:	Accountability
Date:	4/5/16 Tuesday

Activities/ Deliveries

Specific task working and or accomplished today:
28 loads of top soil hauled to area E. Covered the north side of area E with 6" of top soil. Stock piled more top soil in area E for the south side. Got the borrow pit ready for the rain.

EQUIPMENT	HOURS	EQUIPMENT	HOURS
Bobcat	10	Screen	
270 track hoe		31 dozer	10
200 track hoe	10	Loader	
Rock truck		D 61 dozer	10

LABOR

NAME	OCCUPATION	START TIME:	STOP TIME:	HOURS
Tyler Hollis	Forman	6:30	5:00	10.5
Jonathan Tenney	Labor	6:30	5:00	10.5
Statlin Ponder	Labor	6:30	5:00	10.5
Ethan Howle	Labor	6:30	5:00	10.5
Daniel DeJesus	Labor	6:30	5:00	10.5
Matt Owen	Forman	6:30	5:00	10.5
			Total Crew Hours for Today:	63
			Total Crew Hours Cumulative:	10985

Details of Hauling/ Weight ticket # and tons

TRUCK	WEIGHT TICKET # / TONS	LOAD COUNT	Origin	DESTINATION
TC truck				
TC truck				
TC truck				
Jerry truck				
Jerry truck				
Teague truck				
Teague truck				
Benchmark truck				

Weather Report

Tyler Hollis

Solutia OU-3 Remediation Action

Construction Daily Work Report **Day #** _____

Project Number/Name:	OU-3
Safety Meeting Topic:	Slips trips and falls
Date:	4/7/16 Thursday

Activities/ Deliveries

Specific task working and or accomplished today:
515' of 4" under drain pipe laid around the side of the wall in area E. 7725 sq ft of fabric put in area E. 6 loads of 57 stone stock piled outside the wall in area E for under drain.

EQUIPMENT	HOURS	EQUIPMENT	HOURS
Bobcat	10	Screen	
270 track hoe		31 dozer	10
200 track hoe		Loader	
Rock truck		D 61 dozer	

LABOR

NAME	OCCUPATION	START TIME:	STOP TIME:	HOURS
Tyler Hollis	Forman	6:30	4:30	10
Jonathan Tenney	Labor	6:30	4:30	10
Statlin Ponder	Labor	6:30	4:30	10
Ethan Howle	Labor	6:30	4:30	10
Daniel DeJesus	Labor	6:30	4:30	10
Matt Owen	Forman	6:30	4:30	10
			Total Crew Hours for Today:	60
			Total Crew Hours Cumulative:	11105

Details of Hauling/ Weight ticket # and tons

TRUCK	WEIGHT TICKET # / TONS	LOAD COUNT	Origin	DESTINATION
TC truck				
TC truck				
TC truck				
Jerry truck	57 stone	6	Vulcan	Area E
Jerry truck				
Teague truck				
Teague truck				
Benchmark truck				

Weather Report

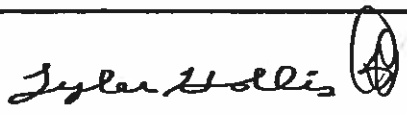

Solutia OU-3 Remediation Action

Construction Daily Work Report **Day #** _____

Project Number/Name:	OU-3
Safety Meeting Topic:	Fall protection
Date:	4/8/16 Friday

Activities/ Deliveries

Specific task working and or accomplished today:
78' of 4" pipe laid in area E. 1170 sq ft of fabric put down in area E. Finished under drain up to the block out in the wall. 2 loads of 57 stone hauled into area E.

EQUIPMENT	HOURS	EQUIPMENT	HOURS
Bobcat	8	Screen	
270 track hoe		31 dozer	8
200 track hoe	2	Loader	8
Rock truck		D 61 dozer	

LABOR

NAME	OCCUPATION	START TIME:	STOP TIME:	HOURS
Tyler Hollis	Forman	6:30	4:00	9.5
Jonathan Tenney	Labor	6:30	4:00	9.5
Statlin Ponder	Labor	6:30	4:00	9.5
Ethan Howle	Labor	6:30	4:00	9.5
Daniel DeJesus	Labor	6:30	4:00	9.5
Matt Owen	Forman	6:30	4:00	9.5
			Total Crew Hours for Today:	57
			Total Crew Hours Cumulative:	11162

Details of Hauling/ Weight ticket # and tons

TRUCK	WEIGHT TICKET # / TONS	LOAD COUNT	Origin	DESTINATION
TC truck				
TC truck				
TC truck				
Jerry truck	57 stone	2	Vulcan	Area E
Jerry truck				
Teague truck				
Teague truck				
Benchmark truck				

Weather Report

Tyler Hollis

Solutia OU-3 Remediation Action

Construction Daily Work Report

Day # _____

Project Number/Name:	OU-3
Safety Meeting Topic:	Fire ext.
Date:	4/11/16 Monday

Activities/ Deliveries

Specific task working and or accomplished today:
61 loads of screened material hauled to area A. Started the haul road and the 1' cover lift. Started raining at 3:00.

EQUIPMENT	HOURS	EQUIPMENT	HOURS
Bobcat	8	Screen	
270 track hoe	8	31 dozer	8
200 track hoe	8	Loader	
Rock truck		D 61 dozer	8

LABOR

NAME	OCCUPATION	START TIME:	STOP TIME:	HOURS
Tyler Hollis	Forman	6:30	4:00	9.5
Jonathan Tenney	Labor			
Statlin Ponder	Labor	6:30	4:00	9.5
Ethan Howle	Labor	6:30	4:00	9.5
Daniel DeJesus	Labor	6:30	4:00	9.5
Matt Owen	Forman	6:30	4:00	9.5
			Total Crew Hours for Today:	47.5
			Total Crew Hours Cumulative:	11209.5

Details of Hauling/ Weight ticket # and tons

TRUCK	WEIGHT TICKET # / TONS	LOAD COUNT	Origin	DESTINATION
TC truck				
TC truck				
TC truck				
Jerry truck				
Jerry truck				
Teague truck				
Teague truck				
Benchmark truck				

Weather Report

Solutia OU-3 Remediation Action

Construction Daily Work Report

Day # _____

Project Number/Name:	OU-3
Safety Meeting Topic:	Hazwaper training
Date:	4/12/16 Tuesday

Activities/ Deliveries

Specific task working and or accomplished today:
Took hazwaper refresher class.

EQUIPMENT	HOURS	EQUIPMENT	HOURS
Bobcat		Screen	
270 track hoe		31 dozer	
200 track hoe		Loader	
Rock truck		D 61 dozer	

LABOR

NAME	OCCUPATION	START TIME:	STOP TIME:	HOURS
Tyler Hollis	Forman	6:30	11:00	4.5
Jonathan Tenney	Labor	6:30	11:00	4.5
Statlin Ponder	Labor	6:30	11:00	4.5
Ethan Howle	Labor	6:30	11:00	4.5
Daniel DeJesus	Labor	6:30	11:00	4.5
Matt Owen	Forman	6:30	11:00	4.5
			Total Crew Hours for Today:	27
			Total Crew Hours Cumulative:	11236.5

Details of Hauling/ Weight ticket # and tons

TRUCK	WEIGHT TICKET # / TONS	LOAD COUNT	Origin	DESTINATION
TC truck				
TC truck				
TC truck				
Jerry truck				
Jerry truck				
Teague truck				
Teague truck				
Benchmark truck				

Weather Report

Solutia OU-3 Remediation Action

Construction Daily Work Report

Day # _____

Project Number/Name:	Ground water
Safety Meeting Topic:	Fall protection
Date:	4/13/16 Wednesday

Activities/ Deliveries

Specific task working and or accomplished today:
Threaded 8" bore with 3" poly pipe in area A. Put valve extensions on 2 valves on top of the basins (by the pipe tray)

EQUIPMENT	HOURS	EQUIPMENT	HOURS
Bobcat		Screen	
270 track hoe		31 dozer	
200 track hoe		Loader	
Rock truck		D 61 dozer	

LABOR

NAME	OCCUPATION	START TIME:	STOP TIME:	HOURS
Tyler Hollis	Forman	6:30	11:00	4.5
Jonathan Tenney	Labor	6:30	11:00	4.5
Statlin Ponder	Labor	6:30	11:00	4.5
Ethan Howle	Labor	6:30	11:00	4.5
Daniel DeJesus	Labor	6:30	11:00	4.5
Matt Owen	Forman			
			Total Crew Hours for Today:	22.5
			Total Crew Hours Cumulative:	2399

Details of Hauling/ Weight ticket # and tons

TRUCK	WEIGHT TICKET # / TONS	LOAD COUNT	Origin	DESTINATION
TC truck				
TC truck				
TC truck				
Jerry truck				
Jerry truck				
Teague truck				
Teague truck				
Benchmark truck				

Weather Report

Solutia OU-3 Remediation Action

Construction Daily Work Report

Day # _____

Project Number/Name:	OU-3
Safety Meeting Topic:	Fall protection
Date:	4/14/16 Thursday

Activities/ Deliveries

Specific task working and or accomplished today:
Cleaned up around the PCB cell.

EQUIPMENT	HOURS	EQUIPMENT	HOURS
Bobcat		Screen	
270 track hoe	8	31 dozer	8
200 track hoe		Loader	
Rock truck	8	D 61 dozer	

LABOR

NAME	OCCUPATION	START TIME:	STOP TIME:	HOURS
Tyler Hollis	Foreman	6:30	4:30	10
Jonathan Tenney	Labor	6:30	4:30	10
Statlin Ponder	Labor			
Ethan Howle	Labor	6:30	4:30	10
Daniel DeJesus	Labor	6:30	4:30	10
Matt Owen	Forman	6:30	4:30	10
			Total Crew Hours for Today:	50
			Total Crew Hours Cumulative:	11321

Details of Hauling/ Weight ticket # and tons

TRUCK	WEIGHT TICKET # / TONS	LOAD COUNT	Origin	DESTINATION
TC truck				
TC truck				
TC truck				
Jerry truck				
Jerry truck				
Teague truck				
Teague truck				
Benchmark truck				

Weather Report

Tyler Hollis V

Solutia OU-3 Remediation Action

Construction Daily Work Report

Day # _____

Project Number/Name:	OU-3
Safety Meeting Topic:	
Date:	4/15/16 Friday

Activities/ Deliveries

Specific task working and or accomplished today:
Dug out sediment pond.

EQUIPMENT	HOURS	EQUIPMENT	HOURS
Bobcat		Screen	
270 track hoe	4	31 dozer	
200 track hoe		Loader	
Rock truck	4	D 61 dozer	

LABOR

NAME	OCCUPATION	START TIME:	STOP TIME:	HOURS
Tyler Hollis	Foreman			
Statlin Ponder	Labor			
Ethan Howle	Labor			
Daniel DeJesus	Labor	6:30	11:00	4.5
Matt Owen	Forman	6:30	11:00	4.5
Daniel DeJesus	Labor Sports complex	11:00	4:30	
			Total Crew Hours for Today:	9
			Total Crew Hours Cumulative:	11330

Details of Hauling/ Weight ticket # and tons

TRUCK	WEIGHT TICKET # / TONS	LOAD COUNT	Origin	DESTINATION
TC truck				
TC truck				
TC truck				
Jerry truck				
Jerry truck				
Teague truck				
Teague truck				
Benchmark truck				

Weather Report

Tyler Hollis

Solutia OU-3 Remediation Action

Construction Daily Work Report

Day # _____

Project Number/Name:	OU-3
Safety Meeting Topic:	
Date:	4/16/16 Saturday

Activities/ Deliveries

Specific task working and or accomplished today:
Screened and stock piled dirt.

EQUIPMENT	HOURS	EQUIPMENT	HOURS
Bobcat		Screen	8
270 track hoe	8	31 dozer	8
200 track hoe	8	Loader	
Rock truck	8	D 61 dozer	

LABOR

NAME	OCCUPATION	START TIME:	STOP TIME:	HOURS
Tyler Hollis	Foreman	6:30	2:30	8
Statlin Ponder	Labor	6:30	2:30	8
Ethan Howle	Labor	6:30	2:30	8
Daniel DeJesus	Labor	6:30	2:30	8
Matt Owen	Forman	6:30	2:30	8
			Total Crew Hours for Today:	40
			Total Crew Hours Cumulative:	11361

Details of Hauling/ Weight ticket # and tons

TRUCK	WEIGHT TICKET # / TONS	LOAD COUNT	Origin	DESTINATION
TC truck				
TC truck				
TC truck				
Jerry truck				
Jerry truck				
Teague truck				
Teague truck				
Benchmark truck				

Weather Report

Tyler Hollis

Solutia OU-3 Remediation Action

Construction Daily Work Report

Day # _____

Project Number/Name:	OU-3
Safety Meeting Topic:	Alertness
Date:	4/18/16 Monday

Activities/ Deliveries

Specific task working and or accomplished today:
59 loads of screened material hauled to area A for the haul road. Screened dirt at the borrow pit.

EQUIPMENT	HOURS	EQUIPMENT	HOURS
Bobcat		Screen	10
270 track hoe	10	31 dozer	10
200 track hoe	10	Loader	
Rock truck	10	D 61 dozer	10

LABOR

NAME	OCCUPATION	START TIME:	STOP TIME:	HOURS
Tyler Hollis	Foreman	6:30	5:00	10.5
D'Marcus Loya	Labor	6:30	5:00	10.5
Statlin Ponder	Labor	6:30	5:00	10.5
Ethan Howle	Labor	6:30	5:00	10.5
Daniel DeJesus	Labor	6:30	5:00	10.5
Matt Owen	Forman	6:30	5:00	10.5
			Total Crew Hours for Today:	63
			Total Crew Hours Cumulative:	11433

Details of Hauling/ Weight ticket # and tons

TRUCK	WEIGHT TICKET # / TONS	LOAD COUNT	Origin	DESTINATION
TC truck				
TC truck				
TC truck				
Jerry truck				
Jerry truck				
Teague truck				
Teague truck				
Benchmark truck				

Weather Report

Tyler Hollis

Solutia OU-3 Remediation Action

Construction Daily Work Report

Day # _____

Project Number/Name:	OU-3
Safety Meeting Topic:	Awareness
Date:	4/19/16 Tuesday

Activities/ Deliveries

Specific task working and or accomplished today:
58 loads of screened material hauled to area A finished haul road and started on the 1' lift. Screened dirt at the borrow pit. Put down sod in area E.

EQUIPMENT	HOURS	EQUIPMENT	HOURS
Bobcat		Screen	10
270 track hoe	10	31 dozer	10
200 track hoe	10	Loader	
Rock truck	10	D 61 dozer	10

LABOR

NAME	OCCUPATION	START TIME:	STOP TIME:	HOURS
Tyler Hollis	Foreman	6:30	5:00	10.5
D'Marcus Loya	Labor	6:30	5:00	10.5
Statlin Ponder	Labor	6:30	5:00	10.5
Ethan Howle	Labor	6:30	5:00	10.5
Daniel DeJesus	Labor	6:30	5:00	10.5
Matt Owen	Forman	6:30	5:00	10.5
Sod guys	6 guys	6:30	4:30	60
			Total Crew Hours for Today:	123
			Total Crew Hours Cumulative:	11556

Details of Hauling/ Weight ticket # and tons

TRUCK	WEIGHT TICKET # / TONS	LOAD COUNT	Origin	DESTINATION
TC truck				
TC truck				
TC truck				
Jerry truck				
Jerry truck				
Teague truck				
Teague truck				
Benchmark truck				

Weather Report

Tyler Hollis

Solutia OU-3 Remediation Action

Construction Daily Work Report

Day # _____

Project Number/Name:	OU-3
Safety Meeting Topic:	Spotting
Date:	4/20/16 Wednesday

Activities/ Deliveries

Specific task working and or accomplished today:
53 loads of screened material hauled to area A for the 1' lift. Dug the dirt off the liner and dug the footer out in area E. Filled one container.

EQUIPMENT	HOURS	EQUIPMENT	HOURS
Mini hoe	10	Screen	
270 track hoe		31 dozer	10
200 track hoe	10	Loader	
Rock truck		D 61 dozer	10

LABOR

NAME	OCCUPATION	START TIME:	STOP TIME:	HOURS
Tyler Hollis	Foreman	6:30	5:00	10.5
D'Marcus Loya	Labor	6:30	5:00	10.5
Statlin Ponder	Labor	6:30	5:00	10.5
Ethan Howle	Labor	6:30	5:00	10.5
Daniel DeJesus	Labor	6:30	5:00	10.5
Matt Owen	Forman	6:30	5:00	10.5
			Total Crew Hours for Today:	63
			Total Crew Hours Cumulative:	11619

Details of Hauling/ Weight ticket # and tons

TRUCK	WEIGHT TICKET # / TONS	LOAD COUNT	Origin	DESTINATION
TC truck				
TC truck				
TC truck				
Jerry truck				
Jerry truck				
Teague truck				
Teague truck				
Benchmark truck				

Weather Report

Tyler Hollis

Solutia OU-3 Remediation Action

Construction Daily Work Report

Day # _____

Project Number/Name:	OU-3
Safety Meeting Topic:	Rain prep
Date:	4/21/16 Thursday

Activities/ Deliveries

Specific task working and or accomplished today:
19 loads of screened material hauled to area A for the 1' lift. 9 load of top soil hauled to area A. Screened dirt at the borrow pit.

EQUIPMENT	HOURS	EQUIPMENT	HOURS
Mini hoe		Screen	10
270 track hoe	10	31 dozer	10
200 track hoe	10	Loader	
Rock truck		D 61 dozer	10

LABOR

NAME	OCCUPATION	START TIME:	STOP TIME:	HOURS
Tyler Hollis	Foreman	6:30	5:00	10.5
D'Marcus Loya	Labor	6:30	5:00	10.5
Statlin Ponder	Labor	6:30	5:00	10.5
Ethan Howle	Labor	6:30	5:00	10.5
Daniel DeJesus	Labor			
Matt Owen	Forman	6:30	5:00	10.5
			Total Crew Hours for Today:	52.5
			Total Crew Hours Cumulative:	11619

Details of Hauling/ Weight ticket # and tons

TRUCK	WEIGHT TICKET # / TONS	LOAD COUNT	Origin	DESTINATION
TC truck				
TC truck				
TC truck				
Jerry truck				
Jerry truck				
Teague truck				
Teague truck				
Benchmark truck				

Weather Report

Tyler Hollis



Solutia OU-3 Remediation Action

Construction Daily Work Report

Day # _____

Project Number/Name:	OU-3
Safety Meeting Topic:	Taking care of yourself
Date:	4/22/16 Friday

Activities/ Deliveries

Specific task working and or accomplished today:
Screened and stock piled dirt.

EQUIPMENT	HOURS	EQUIPMENT	HOURS
Mini hoe		Screen	10
270 track hoe	10	31 dozer	10
200 track hoe	10	Loader	
Rock truck		D 61 dozer	

LABOR

NAME	OCCUPATION	START TIME:	STOP TIME:	HOURS
Tyler Hollis	Foreman	6:30	9:30	3
D'Marcus Loya	Labor	6:30	4:30	10
Statlin Ponder	Labor	6:30	4:30	10
Ethan Howle	Labor	6:30	4:30	10
Daniel DeJesus	Labor	6:30	4:30	10
Matt Owen	Forman	6:30	4:30	10
			Total Crew Hours for Today:	53
			Total Crew Hours Cumulative:	11724.5

Details of Hauling/ Weight ticket # and tons

TRUCK	WEIGHT TICKET # / TONS	LOAD COUNT	Origin	DESTINATION
TC truck				
TC truck				
TC truck				
Jerry truck				
Jerry truck				
Teague truck				
Teague truck				
Benchmark truck				

Weather Report

Tyler Hollis

Solutia OU-3 Remediation Action

Construction Daily Work Report

Day # _____

Project Number/Name:	OU-3
Safety Meeting Topic:	Dust control
Date:	4/23/16 Saturday

Activities/ Deliveries

Specific task working and or accomplished today:
Screened and stock piled dirt.

EQUIPMENT	HOURS	EQUIPMENT	HOURS
Mini hoe		Screen	10
270 track hoe	10	31 dozer	10
200 track hoe	10	Loader	
Rock truck		D 61 dozer	

LABOR

NAME	OCCUPATION	START TIME:	STOP TIME:	HOURS
Tyler Hollis	Foreman	6:30	2:30	8
D'Marcus Loya	Labor	6:30	3:30	Sports complex
Statlin Ponder	Labor	6:30	2:30	8
Ethan Howle	Labor	6:30	2:30	8
Daniel DeJesus	Labor	6:30	2:30	8
Matt Owen	Forman			
			Total Crew Hours for Today:	32
			Total Crew Hours Cumulative:	11756.5

Details of Hauling/ Weight ticket # and tons

TRUCK	WEIGHT TICKET # / TONS	LOAD COUNT	Origin	DESTINATION
TC truck				
TC truck				
TC truck				
Jerry truck				
Jerry truck				
Teague truck				
Teague truck				
Benchmark truck				

Weather Report

Tyler Hollis



Solutia OU-3 Remediation Action

Construction Daily Work Report

Day # _____

Project Number/Name:	OU-3
Safety Meeting Topic:	Pre maintenance check list
Date:	4/25/16 Monday

Activities/ Deliveries

Specific task working and or accomplished today:
50 loads of screened material hauled to area A. 12 loads of top soil hauled to area A. Screened dirt at the Borrow pit. Dug out sediment pond.

EQUIPMENT	HOURS	EQUIPMENT	HOURS
Bobcat	5	Screen	10
270 track hoe	10	31 dozer	2
200 track hoe	10	Loader	8
Rock truck	5	D 61 dozer	10

LABOR

NAME	OCCUPATION	START TIME:	STOP TIME:	HOURS
Tyler Hollis	Foreman	6:30	5:00	10.5
D'Marcus Loya	Labor.	6:30	5:00	10.5
Statlin Ponder	Labor	6:30	5:00	10.5
Ethan Howle	Labor	6:30	5:00	10.5
Daniel DeJesus	Labor	6:30	5:00	10.5
Matt Owen	Forman	6:30	5:00	10.5
			Total Crew Hours for Today:	63
			Total Crew Hours Cumulative:	11819.5

Details of Hauling/ Weight ticket # and tons

TRUCK	WEIGHT TICKET # / TONS	LOAD COUNT	Origin	DESTINATION
TC truck				
TC truck				
TC truck				
Jerry truck				
Jerry truck				
Teague truck				
Teague truck				
Benchmark truck				

Weather Report

Tyler Hollis



Solutia OU-3 Remediation Action

Construction Daily Work Report **Day #** _____

Project Number/Name:	OU-3
Safety Meeting Topic:	Over head lines
Date:	4/26/16 Tuesday

Activities/ Deliveries

Specific task working and or accomplished today:
35 loads of screened dirt hauled to area A. 20 loads of top soil hauled to area A. Screened dirt at the borrow pit.

EQUIPMENT	HOURS	EQUIPMENT	HOURS
Bobcat		Screen	10
270 track hoe	10	31 dozer	10
200 track hoe	10	Loader	10
Rock truck		D 61 dozer	10

LABOR

NAME	OCCUPATION	START TIME:	STOP TIME:	HOURS
Tyler Hollis	Foreman	6:30	5:00	10.5
D'Marcus Loya	Labor.	6:30	5:00	10.5
Statlin Ponder	Labor	8:30	5:00	8.5
Ethan Howle	Labor	6:30	5:00	10.5
Daniel DeJesus	Labor	6:30	5:00	10.5
Matt Owen	Forman	6:30	5:00	10.5
			Total Crew Hours for Today:	61
			Total Crew Hours Cumulative:	11880.5

Details of Hauling/ Weight ticket # and tons

TRUCK	WEIGHT TICKET # / TONS	LOAD COUNT	Origin	DESTINATION
TC truck				
TC truck				
TC truck				
Jerry truck				
Jerry truck				
Teague truck				
Teague truck				
Benchmark truck				

Weather Report

Tyler Hollis

Solutia OU-3 Remediation Action

Construction Daily Work Report

Day # _____

Project Number/Name:	OU-3
Safety Meeting Topic:	Fall protection
Date:	4/27/16 Wednesday

Activities/ Deliveries

Specific task working and or accomplished today:
35 loads of top soil hauled to area A. 1 load of screened dirt. Finished digging out sediment pond. Screened dirt at borrow pit.

EQUIPMENT	HOURS	EQUIPMENT	HOURS
Bobcat		Screen	10
270 track hoe	10	31 dozer	10
200 track hoe	10	Loader	5
Rock truck	2	D 61 dozer	10

LABOR

NAME	OCCUPATION	START TIME:	STOP TIME:	HOURS
Tyler Hollis	Foreman	6:30	5:00	10.5
D'Marcus Loya	Labor.	6:30	5:00	10.5
Statlin Ponder	Labor	12:00	5:00	5
Ethan Howle	Labor	6:30	5:00	10.5
Daniel DeJesus	Labor	6:30	5:00	10.5
Matt Owen	Forman	6:30	5:00	10.5
			Total Crew Hours for Today:	57.5
			Total Crew Hours Cumulative:	11938

Details of Hauling/ Weight ticket # and tons

TRUCK	WEIGHT TICKET # / TONS	LOAD COUNT	Origin	DESTINATION
TC truck				
TC truck				
TC truck				
Jerry truck				
Jerry truck				
Teague truck				
Teague truck				
Benchmark truck				

Weather Report

Tyler Hollis

Solutia OU-3 Remediation Action

Construction Daily Work Report **Day #** _____

Project Number/Name:	OU-3
Safety Meeting Topic:	202 Traffic
Date:	4/28/16 Thursday

Activities/ Deliveries

Specific task working and or accomplished today:
43 loads of top soil hauled to area A. Screened dirt at borrow pit.

EQUIPMENT	HOURS	EQUIPMENT	HOURS
Bobcat		Screen	10
270 track hoe	10	31 dozer	10
200 track hoe	10	Loader	5
Rock truck		D 61 dozer	10

LABOR

NAME	OCCUPATION	START TIME:	STOP TIME:	HOURS
Tyler Hollis	Foreman	6:30	5:00	10.5
D'Marcus Loya	Labor.	6:30	5:00	10.5
Statlin Ponder	Labor	VC		
Ethan Howle	Labor	6:30	5:00	10.5
Daniel DeJesus	Labor	6:30	5:00	10.5
Matt Owen	Forman	6:30	5:00	10.5
			Total Crew Hours for Today:	52.5
			Total Crew Hours Cumulative:	11990.5

Details of Hauling/ Weight ticket # and tons

TRUCK	WEIGHT TICKET # / TONS	LOAD COUNT	Origin	DESTINATION
TC truck				
TC truck				
TC truck				
Jerry truck				
Jerry truck				
Teague truck				
Teague truck				
Benchmark truck				

Weather Report

Tyler Hollis

Solutia OU-3 Remediation Action

Construction Daily Work Report

Day # _____

Project Number/Name:	OU-3
Safety Meeting Topic:	Working close to equipment
Date:	4/29/16 Friday

Activities/ Deliveries

Specific task working and or accomplished today:
Started pushing haul road to the east into fill. Laid out 437 feet of 3"and 2" poly and 1.5" conduent in area A from bore to bore.

EQUIPMENT	HOURS	EQUIPMENT	HOURS
Bobcat		Screen	
270 track hoe		31 dozer	
200 track hoe		Loader	
Rock truck		D 61 dozer	10

LABOR

NAME	OCCUPATION	START TIME:	STOP TIME:	HOURS
Tyler Hollis	Foreman	6:30	4:30	10
D'Marcus Loya	Labor.	6:30	4:30	10
Statlin Ponder	Labor	VC		
Ethan Howle	Labor	6:30	4:30	10
Daniel DeJesus	Labor	6:30	4:30	10
Matt Owen	Forman	6:30	4:30	10
			Total Crew Hours for Today:	50
			Total Crew Hours Cumulative:	12040.5

Details of Hauling/ Weight ticket # and tons

TRUCK	WEIGHT TICKET # / TONS	LOAD COUNT	Origin	DESTINATION
TC truck				
TC truck				
TC truck				
Jerry truck				
Jerry truck				
Teague truck				
Teague truck				
Benchmark truck				

Weather Report

Tyler Hollis

Solutia OU-3 Remediation Action

Construction Daily Work Report

Day # _____

Project Number/Name:	OU-3
Safety Meeting Topic:	Proper lifting
Date:	5/2/16 Monday

Activities/ Deliveries

Specific task working and or accomplished today:
Bladed up borrow pit. Greased equipment.

EQUIPMENT	HOURS	EQUIPMENT	HOURS
Bobcat		Screen	
270 track hoe		31 dozer	2
200 track hoe		Loader	
Rock truck		D 61 dozer	

LABOR

NAME	OCCUPATION	START TIME:	STOP TIME:	HOURS
Tyler Hollis	Foreman	12:00	4:30	4.5
D'Marcus Loya	Labor.	12:00	4:30	4.5
Statlin Ponder	Labor	12:00	4:30	4.5
Ethan Howle	Labor	12:00	4:30	4.5
Daniel DeJesus	Labor	12:00	4:30	4.5
Matt Owen	Forman	12:00	4:30	4.5
Jonathan Tenney	Labor	12:00	4:30	4.5
			Total Crew Hours for Today:	27
			Total Crew Hours Cumulative:	12067

Details of Hauling/ Weight ticket # and tons

TRUCK	WEIGHT TICKET # / TONS	LOAD COUNT	Origin	DESTINATION
TC truck				
TC truck				
TC truck				
Jerry truck				
Jerry truck				
Teague truck				
Teague truck				
Benchmark truck				

Weather Report

Tyler Hollis

Solutia OU-3 Remediation Action

Construction Daily Work Report

Day # _____

Project Number/Name:	OU-3
Safety Meeting Topic:	Slips and falls
Date:	5/3/16 Tuesday

Activities/ Deliveries

Specific task working and or accomplished today:
Area E is ready for PFF to finish the liner. Took 1 load of screen dirt to cover the footer on the wall in area E. Pumped water in area A.

EQUIPMENT	HOURS	EQUIPMENT	HOURS
Bobcat		Screen	
270 track hoe		31 dozer	
200 track hoe	5	Loader	
Rock truck		D 61 dozer	

LABOR

NAME	OCCUPATION	START TIME:	STOP TIME:	HOURS
Tyler Hollis	Foreman	6:30	4:30	10
Jonathan Tenney	Labor.	6:30	4:30	10
Statlin Ponder	Labor	6:30	4:30	10
Ethan Howle	Labor	6:30	4:30	10
Daniel DeJesus	Labor	6:30	4:30	10
Matt Owen	Forman	6:30	4:30	10
			Total Crew Hours for Today:	60
			Total Crew Hours Cumulative:	12127

Details of Hauling/ Weight ticket # and tons

TRUCK	WEIGHT TICKET # / TONS	LOAD COUNT	Origin	DESTINATION
TC truck				
TC truck				
TC truck				
Jerry truck				
Jerry truck				
Teague truck				
Teague truck				
Benchmark truck				

Weather Report

Tyler Hollis

Solutia OU-3 Remediation Action

Construction Daily Work Report

Day # _____

Project Number/Name:	OU-3
Safety Meeting Topic:	Hygiene
Date:	5/4/16 Wednesday

Activities/ Deliveries

Specific task working and or accomplished today:
30 loads of screened material hauled to area A. Screened dirt at the borrow pit.

EQUIPMENT	HOURS	EQUIPMENT	HOURS
Bobcat		Screen	10
270 track hoe	10	31 dozer	
200 track hoe	10	Loader	10
Rock truck		D 61 dozer	10

LABOR

NAME	OCCUPATION	START TIME:	STOP TIME:	HOURS
Tyler Hollis	Foreman	6:30	5:00	10.5
Jonathan Tenney	Labor	6:30	5:00	10.5
Statlin Ponder	Labor	6:30	5:00	10.5
Ethan Howle	Labor	6:30	5:00	10.5
Daniel DeJesus	Labor	6:30	5:00	10.5
Matt Owen	Forman	6:30	5:00	10.5
			Total Crew Hours for Today:	63
			Total Crew Hours Cumulative:	12190

Details of Hauling/ Weight ticket # and tons

TRUCK	WEIGHT TICKET # / TONS	LOAD COUNT	Origin	DESTINATION
TC truck				
TC truck				
TC truck				
Jerry truck				
Jerry truck				
Teague truck				
Teague truck				
Benchmark truck				

Weather Report

Tyler Hollis

Solutia OU-3 Remediation Action

Construction Daily Work Report **Day #** _____

Project Number/Name:	OU-3
Safety Meeting Topic:	PFF
Date:	5/5/16 Thursday

Activities/ Deliveries

Specific task working and or accomplished today:
13 loads of screened dirt hauled to area A. Started pushing out top soil on the south side of area A. Screened dirt at the borrow pit. PFF tied in liner in the south west corner of area E.

EQUIPMENT	HOURS	EQUIPMENT	HOURS
Bobcat		Screen	10
270 track hoe	10	31 dozer	10
200 track hoe	10	Loader	10
Rock truck		D 61 dozer	10

LABOR

NAME	OCCUPATION	START TIME:	STOP TIME:	HOURS
Tyler Hollis	Foreman	6:30	5:00	10.5
Jonathan Tenney	Labor.	6:30	5:00	10.5
Statlin Ponder	Labor	6:30	5:00	10.5
Ethan Howle	Labor	6:30	5:00	10.5
Daniel DeJesus	Labor	6:30	5:00	10.5
Matt Owen	Forman	6:30	5:00	10.5
PFF	5 guys	6:30	4:30	50
			Total Crew Hours for Today:	113
			Total Crew Hours Cumulative:	12303

Details of Hauling/ Weight ticket # and tons

TRUCK	WEIGHT TICKET # / TONS	LOAD COUNT	Origin	DESTINATION
TC truck				
TC truck				
TC truck				
Jerry truck				
Jerry truck				
Teague truck				
Teague truck				
Benchmark truck				

Weather Report

Tyler Hollis

Solutia OU-3 Remediation Action

Construction Daily Work Report **Day #** _____

Project Number/Name:	OU-3
Safety Meeting Topic:	Hand tools
Date:	5/6/16 Friday

Activities/ Deliveries

Specific task working and or accomplished today:
35 loads of top soil hauled to area A. Got the south half of area A ready for final depth check. 2 loads of top soil hauled to area E. 3.5 loads of screened material hauled to area E. Put 1' lift in the south west corner of area E and put the 6" lift of top soil in the south west corner of area E.

EQUIPMENT	HOURS	EQUIPMENT	HOURS
Bobcat		Screen	
270 track hoe	10	31 dozer	10
200 track hoe	10	Loader	10
Rock truck		D 61 dozer	10

LABOR

NAME	OCCUPATION	START TIME:	STOP TIME:	HOURS
Tyler Hollis	Foreman	6:30	5:00	10.5
Jonathan Tenney	Labor	6:30	5:00	10.5
Statlin Ponder	Labor	6:30	5:00	10.5
Ethan Howle	Labor	6:30	5:00	10.5
Daniel DeJesus	Labor	6:30	5:00	10.5
Matt Owen	Forman	6:30	5:00	10.5
2 temps	Labor	6:30	5:00	21
			Total Crew Hours for Today:	84
			Total Crew Hours Cumulative:	12387

Details of Hauling/ Weight ticket # and tons

TRUCK	WEIGHT TICKET # / TONS	LOAD COUNT	Origin	DESTINATION
TC truck				
TC truck				
TC truck				
Jerry truck				
Jerry truck				
Teague truck				
Teague truck				
Benchmark truck				

Weather Report

Tyler Hollis

Solutia OU-3 Remediation Action

Construction Daily Work Report **Day #** _____

Project Number/Name:	OU-3
Safety Meeting Topic:	Hydration
Date:	5/7/16 Saturday

Activities/ Deliveries

Specific task working and or accomplished today:
7 loads of screened material hauled to area A. Finished grading in area E.

EQUIPMENT	HOURS	EQUIPMENT	HOURS
Bobcat		Screen	
270 track hoe	8	31 dozer	8
200 track hoe	8	Loader	8
Rock truck		D 61 dozer	8

LABOR

NAME	OCCUPATION	START TIME:	STOP TIME:	HOURS
Tyler Hollis	Foreman	6:30	2:30	8
Jonathan Tenney	Labor.	6:30	2:30	8
Statlin Ponder	Labor	6:30	2:30	8
Ethan Howle	Labor	6:30	2:30	8
Daniel DeJesus	Labor	6:30	2:30	8
Matt Owen	Forman	6:30	2:30	8
2 temps	Labor	6:30	2:30	16
			Total Crew Hours for Today:	64
			Total Crew Hours Cumulative:	12451

Details of Hauling/ Weight ticket # and tons

TRUCK	WEIGHT TICKET # / TONS	LOAD COUNT	Origin	DESTINATION
TC truck				
TC truck				
TC truck				
Jerry truck				
Jerry truck				
Teague truck				
Teague truck				
Benchmark truck				

Weather Report

Tyler Hollis

40

Solutia OU-3 Remediation Action

Construction Daily Work Report **Day #** _____

Project Number/Name:	OU-3
Safety Meeting Topic:	Nutrition
Date:	5/9/16 Monday

Activities/ Deliveries

Specific task working and or accomplished today:
23 loads of top soil hauled to area A. 3 loads of screened material hauled to area A. Spread top soil.

EQUIPMENT	HOURS	EQUIPMENT	HOURS
Bobcat	8	Screen	
270 track hoe	10	31 dozer	10
200 track hoe	10	Loader	
Rock truck		D 61 dozer	10

LABOR

NAME	OCCUPATION	START TIME:	STOP TIME:	HOURS
Tyler Hollis	Foreman	6:30	5:00	10.5
Dmarcus	Labor	6:30	5:30	10.5
Statlin Ponder	Labor	6:30	5:00	10.5
Ethan Howle	Labor	6:30	5:00	10.5
Daniel DeJesus	Labor	6:30	5:00	10.5
Matt Owen	Forman	6:30	5:00	10.5
			Total Crew Hours for Today:	63
			Total Crew Hours Cumulative:	12514

Details of Hauling/ Weight ticket # and tons

TRUCK	WEIGHT TICKET # / TONS	LOAD COUNT	Origin	DESTINATION
TC truck				
TC truck				
TC truck				
Jerry truck				
Jerry truck				
Teague truck				
Teague truck				
Benchmark truck				

Weather Report

Solutia OU-3 Remediation Action

Construction Daily Work Report **Day #** _____

Project Number/Name:	OU-3
Safety Meeting Topic:	Mental health
Date:	5/10/16 Tuesday

Activities/ Deliveries

Specific task working and or accomplished today:
Put down 1500sq ft of sod in the south west corner of area E. Finished up inside of the wall in area E. 760sq ft of sod put down on part of the west side of area A. Moved 13 loads of class 1 rip rap from C&D and the PCB cell to area A.

EQUIPMENT	HOURS	EQUIPMENT	HOURS
Bobcat	10	Screen	
270 track hoe		31 dozer	1
200 track hoe		Loader	8
Rock truck		D 61 dozer	10

LABOR

NAME	OCCUPATION	START TIME:	STOP TIME:	HOURS
Tyler Hollis	Foreman	6:30	4:30	10
Statlin Ponder	Labor	6:30	4:30	10
Dmarcus	Labor	6:30	4:30	10
Daniel DeJesus	Labor	6:30	4:30	10
Matt Owen	Forman	6:30	4:30	10
			Total Crew Hours for Today:	50
			Total Crew Hours Cumulative:	12564

Details of Hauling/ Weight ticket # and tons

TRUCK	WEIGHT TICKET # / TONS	LOAD COUNT	Origin	DESTINATION
TC truck				
TC truck				
TC truck				
Jerry truck				
Jerry truck				
Teague truck				
Teague truck				
Benchmark truck				

Weather Report

Tyler Hollis

Solutia OU-3 Remediation Action

Construction Daily Work Report

Day # _____

Project Number/Name:	OU-3
Safety Meeting Topic:	Congested area.
Date:	5/11/16 Wednesday

Activities/ Deliveries

Specific task working and or accomplished today:
6 loads of class 1 rip rap hauled into area A. 4050 sq ft of fabric put down for the armor shield in area A.

EQUIPMENT	HOURS	EQUIPMENT	HOURS
Bobcat	10	Screen	
270 track hoe		31 dozer	1
200 track hoe	10	Loader	
Bobcat	10	D 61 dozer	

LABOR

NAME	OCCUPATION	START TIME:	STOP TIME:	HOURS
Tyler Hollis	Foreman	6:30	5:00	10.5
Statlin Ponder	Labor	6:30	5:00	10.5
Dmarcus	Labor	6:30	5:00	10.5
Daniel DeJesus	Labor	6:30	5:00	10.5
Matt Owen	Forman	6:30	5:00	10.5
			Total Crew Hours for Today:	52.5
			Total Crew Hours Cumulative:	12616.5

Details of Hauling/ Weight ticket # and tons

TRUCK	WEIGHT TICKET # / TONS	LOAD COUNT	Origin	DESTINATION
TC truck				
TC truck				
TC truck				
Jerry truck	Class 1 rip rap	6	Vulcan	Area A
Jerry truck				
Teague truck				
Teague truck				
Benchmark truck				

Weather Report

Tyler Hollis

Solutia OU-3 Remediation Action

Construction Daily Work Report **Day #** _____

Project Number/Name:	OU-3
Safety Meeting Topic:	Dust control
Date:	5/12/16 Thursday

Activities/ Deliveries

Specific task working and or accomplished today:
Put down 295' of armor shield.(2212.5 sq ft of fabric).

EQUIPMENT	HOURS	EQUIPMENT	HOURS
Bobcat	4	Screen	
270 track hoe		31 dozer	1
200 track hoe	8	Loader	
Bobcat	8	D 61 dozer	

LABOR

NAME	OCCUPATION	START TIME:	STOP TIME:	HOURS
Tyler Hollis	Foreman			
Statlin Ponder	Labor	6:30	3:00	8.5
Dmarcus	Labor	6:30	3:00	8.5
Daniel DeJesus	Labor			
Matt Owen	Forman	6:30	3:00	8.5
			Total Crew Hours for Today:	25.5
			Total Crew Hours Cumulative:	12642

Details of Hauling/ Weight ticket # and tons

TRUCK	WEIGHT TICKET # / TONS	LOAD COUNT	Origin	DESTINATION
TC truck				
TC truck				
TC truck				
Jerry truck				
Jerry truck				
Teague truck				
Teague truck				
Benchmark truck				

Weather Report

Tyler Hollis

Solutia OU-3 Remediation Action

Construction Daily Work Report **Day #** _____

Project Number/Name:	Ou-3
Safety Meeting Topic:	HWY 202
Date:	5/16/16 Monday

Activities/ Deliveries

Specific task working and or accomplished today:
Put in check dam in area A. 150 sq ft of fabric. Put in a filter dam in area A 1050 sq ft of fabric.

EQUIPMENT	HOURS	EQUIPMENT	HOURS
Bobcat	3	Screen	
270 track hoe		31 dozer	
200 track hoe		Loader	
Bobcat		Mini hoe	

LABOR

NAME	OCCUPATION	START TIME:	STOP TIME:	HOURS
Tyler Hollis	Foreman			
Statlin Ponder	Labor	6:30	10:00	3.5
Dmarcus	Labor			
Daniel DeJesus	Labor			
Matt Owen	Forman			
			Total Crew Hours for Today:	3.5
			Total Crew Hours Cumulative:	12645.5

Details of Hauling/ Weight ticket # and tons

TRUCK	WEIGHT TICKET # / TONS	LOAD COUNT	Origin	DESTINATION
TC truck				
TC truck				
TC truck				
Jerry truck				
Jerry truck				
Teague truck				
Teague truck				
Benchmark truck				

Weather Report

Tyler Hollis

Solutia OU-3 Remediation Action

Construction Daily Work Report **Day #** _____

Project Number/Name:	OU-3
Safety Meeting Topic:	Wet Roads
Date:	5/17/16 Tuesday

Activities/ Deliveries

Specific task working and or accomplished today:
Covered 3/4 of area A with seed, fertilizer, and hay.

EQUIPMENT	HOURS	EQUIPMENT	HOURS
Bobcat	3	Hay blower	2
270 track hoe		31 dozer	4
200 track hoe		Loader	
Bobcat		Mini hoe	

LABOR

NAME	OCCUPATION	START TIME:	STOP TIME:	HOURS
Tyler Hollis	Foreman	6:30	2:30	8
Statlin Ponder	Labor	6:30	2:30	8
Dmarcus	Labor	6:30	2:30	8
Daniel DeJesus	Labor	6:30	2:30	8
Grass works	12 guys	6:30	2:30	96
			Total Crew Hours for Today:	128
			Total Crew Hours Cumulative:	12810

Details of Hauling/ Weight ticket # and tons

TRUCK	WEIGHT TICKET # / TONS	LOAD COUNT	Origin	DESTINATION
TC truck				
TC truck				
TC truck				
Jerry truck				
Jerry truck				
Teague truck				
Teague truck				
Benchmark truck				

Weather Report

Tyler Hollis

Solutia OU-3 Remediation Action

Construction Daily Work Report

Day # _____

Project Number/Name:	OU-3
Safety Meeting Topic:	Do the right things
Date:	5/19/16 Thursday

Activities/ Deliveries

Specific task working and or accomplished today:
274' of armor shield done on the north side of area A. 2055 sq ft of fabric. Finished top soil on the north side of area A. Put out seed, fertilizer, and hay on the north side of area A.

EQUIPMENT	HOURS	EQUIPMENT	HOURS
Bobcat	10	Hay blower	2
Bobcat	10	31 dozer	5
200 track hoe	3	Loader	
		Mini hoe	3

LABOR

NAME	OCCUPATION	START TIME:	STOP TIME:	HOURS
Tyler Hollis	Foreman	6:30	4:30	10
Statlin Ponder	Labor	6:30	4:30	10
Dmarcus	Labor	6:30	4:30	10
Daniel DeJesus	Labor	6:30	4:30	10
			Total Crew Hours for Today:	40
			Total Crew Hours Cumulative:	12872

Details of Hauling/ Weight ticket # and tons

TRUCK	WEIGHT TICKET # / TONS	LOAD COUNT	Origin	DESTINATION
TC truck				
TC truck				
TC truck				
Jerry truck				
Jerry truck				
Teague truck				
Teague truck				
Benchmark truck				

Weather Report

Tyler Hollis

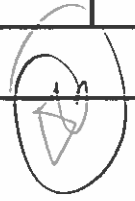

Solutia OU-3 Remediation Action

Construction Daily Work Report **Day #** _____

Project Number/Name:	OU-3
Safety Meeting Topic:	Critical lift
Date:	5/23/16 Monday

Activities/ Deliveries

Specific task working and or accomplished today:
Dug out concrete pad in area H.

EQUIPMENT	HOURS	EQUIPMENT	HOURS
Bobcat		Hay blower	
		31 dozer	
200 track hoe		Loader	2
		Mini hoe	2

LABOR

NAME	OCCUPATION	START TIME:	STOP TIME:	HOURS
Tyler Hollis	Foreman	6:30	9:00	2.5
Statlin Ponder	Labor	6:30	9:00	2.5
Dmarcus	Labor	6:30	9:00	2.5
Daniel DeJesus	Labor	6:30	9:00	2.5
			Total Crew Hours for Today:	10
			Total Crew Hours Cumulative:	12882

Details of Hauling/ Weight ticket # and tons

TRUCK	WEIGHT TICKET # / TONS	LOAD COUNT	Origin	DESTINATION
TC truck				
TC truck				
TC truck				
Jerry truck				
Jerry truck				
Teague truck				
Teague truck				
Benchmark truck				

Weather Report

Tyler Hollis

Solutia OU-3 Remediation Action

Construction Daily Work Report **Day #** _____

Project Number/Name:	OU-3
Safety Meeting Topic:	Critical lift
Date:	5/24/16 Tuesday

Activities/ Deliveries

Specific task working and or accomplished today:
Finished armor shield on the southeast corner of area A 40' of armor shield 300 sq ft of fabric. Seeded, fertilized, and Hayed the south east corner of area A.

EQUIPMENT	HOURS	EQUIPMENT	HOURS
Bobcat	2	Hay blower	
		31 dozer	
200 track hoe		Loader	
		Mini hoe	2

LABOR

NAME	OCCUPATION	START TIME:	STOP TIME:	HOURS
Tyler Hollis	Foreman	2:30	4:30	2
Jonathan Tenney	Labor	2:30	4:30	2
Statlin Ponder	Labor	2:30	4:30	2
Ethan Howle	Labor	2:30	4:30	2
Daniel DeJesus	Labor	2:30	4:30	2
			Total Crew Hours for Today:	10
			Total Crew Hours Cumulative:	12892

Details of Hauling/ Weight ticket # and tons

TRUCK	WEIGHT TICKET # / TONS	LOAD COUNT	Origin	DESTINATION
TC truck				
TC truck				
TC truck				
Jerry truck				
Jerry truck				
Teague truck				
Teague truck				
Benchmark truck				

Weather Report

Tyler Hollis

DW

Solutia OU-3 Remediation Action

Construction Daily Work Report **Day #** _____

Project Number/Name:	OU-3
Safety Meeting Topic:	House keeping
Date:	5/25/16 Wednesday

Activities/ Deliveries

Specific task working and or accomplished today:
Hauled 5 loads of rip rap off site. Hauled 1 load of screened material back to the borrow pit. Hauled 2 loads of top soil back the the borrow pit. Hauled 2 loads of 24 stone to the PCB cell to put on the road. Seeded, fertilized, and Hayed the north west corner of area A. Dressed up northern area from where it was messed up from the container.

EQUIPMENT	HOURS	EQUIPMENT	HOURS
Bobcat	5	Hay blower	
		31 dozer	5
200 track hoe	5	Loader	5
		Mini hoe	2

LABOR

NAME	OCCUPATION	START TIME:	STOP TIME:	HOURS
Tyler Hollis	Foreman	6:30	4:30	10
Jonathan Tenney	Labor	6:30	4:30	10
Statlin Ponder	Labor	6:30	4:30	10
Ethan Howle	Labor	6:30	4:30	10
Daniel DeJesus	Labor	6:30	4:30	10
			Total Crew Hours for Today:	50
			Total Crew Hours Cumulative:	12942

Details of Hauling/ Weight ticket # and tons

TRUCK	WEIGHT TICKET # / TONS	LOAD COUNT	Origin	DESTINATION
TC truck				
TC truck				
TC truck				
Jerry truck				
Jerry truck				
Teague truck				
Teague truck				
Benchmark truck				

Weather Report

Tyler Hollis

Solutia OU-3 Remediation Action

Construction Daily Work Report **Day #** _____

Project Number/Name:	OU-3
Safety Meeting Topic:	Emergency response plan
Date:	5/26/16 Thursday

Activities/ Deliveries

Specific task working and or accomplished today:
Took the rest of the silt fence down in area C&D. Cleaned up west of C&D.

EQUIPMENT	HOURS	EQUIPMENT	HOURS
Bobcat	3	Hay blower	
		31 dozer	
200 track hoe		Loader	3
		Mini hoe	3

LABOR

NAME	OCCUPATION	START TIME:	STOP TIME:	HOURS
Tyler Hollis	Foreman	1:00	4:30	3.5
Jonathan Tenney	Labor	1:00	4:30	3.5
Statlin Ponder	Labor	1:00	4:30	3.5
Ethan Howle	Labor	1:00	4:30	3.5
Daniel DeJesus	Labor	1:00	4:30	3.5
			Total Crew Hours for Today:	17.5
			Total Crew Hours Cumulative:	12959.5

Details of Hauling/ Weight ticket # and tons

TRUCK	WEIGHT TICKET # / TONS	LOAD COUNT	Origin	DESTINATION
TC truck				
TC truck				
TC truck				
Jerry truck				
Jerry truck				
Teague truck				
Teague truck				
Benchmark truck				

Weather Report

Tyler Hollis

Solutia OU-3 Remediation Action

Construction Daily Work Report

Day # _____

Project Number/Name:	OU-3
Safety Meeting Topic:	Emergency response plan
Date:	5/27/16 Friday

Activities/ Deliveries

Specific task working and or accomplished today:
2 loads of class 1 rip rap hauled to area C&D to extend south east rip rap ditch. 900sq ft of fabric. Took down 220' of fence in area H.

EQUIPMENT	HOURS	EQUIPMENT	HOURS
Bobcat	8	Hay blower	
		31 dozer	
200 track hoe		Loader	8
		Mini hoe	3

LABOR

NAME	OCCUPATION	START TIME:	STOP TIME:	HOURS
Tyler Hollis	Foreman	6:30	2:30	8
Jonathan Tenney	Labor	6:30	2:30	8
Statlin Ponder	Labor	6:30	2:30	8
Ethan Howle	Labor	6:30	2:30	8
Daniel DeJesus	Labor	6:30	2:30	8
			Total Crew Hours for Today:	40
			Total Crew Hours Cumulative:	12999.5

Details of Hauling/ Weight ticket # and tons

TRUCK	WEIGHT TICKET # / TONS	LOAD COUNT	Origin	DESTINATION
TC truck				
TC truck				
TC truck				
Jerry truck				
Jerry truck				
Teague truck				
Teague truck				
Benchmark truck				

Weather Report

Tyler Hollis

Solutia OU-3 Remediation Action

Construction Daily Work Report

Day # _____

Project Number/Name:	OU-3
Safety Meeting Topic:	Mob in
Date:	6/7/16 Tuesday

Activities/ Deliveries

Specific task working and or accomplished today:
Moved screen out of pit started moving rock to fill in the cut at the borrow pit. 25 loads of rock moved.

EQUIPMENT	HOURS	EQUIPMENT	HOURS
Bobcat		Rock truck	10
270 track hoe	10	31 dozer	
200 track hoe	10	Loader	
Back hoe hammer		Mini hoe	

LABOR

NAME	OCCUPATION	START TIME:	STOP TIME:	HOURS
Tyler Hollis	Foreman	6:30	5:00	10.5
Jonathan Tenney	Labor	6:30	5:00	10.5
Statlin Ponder	Labor	6:30	4:00	NGC
Ethan Howle	Labor	6:30	2:00	7.5
Daniel DeJesus	Labor	6:30	4:00	NGC
Daniel DeJesus	Labor	4:00	5:00	1
			Total Crew Hours for Today:	29.5
			Total Crew Hours Cumulative:	13029

Details of Hauling/ Weight ticket # and tons

TRUCK	WEIGHT TICKET # / TONS	LOAD COUNT	Origin	DESTINATION
TC truck				
TC truck				
TC truck				
Jerry truck				
Jerry truck				
Teague truck				
Teague truck				
Benchmark truck				

Weather Report

Tyler Hollis

Solutia OU-3 Remediation Action

Construction Daily Work Report

Day # _____

Project Number/Name:	OU-3
Safety Meeting Topic:	
Date:	6/8/16 Wednesday

Activities/ Deliveries

Specific task working and or accomplished today:
Hauled rock to fill in cut in the borrow pit. 56 loads of rock moved.

EQUIPMENT	HOURS	EQUIPMENT	HOURS
Bobcat		Rock truck	10
270 track hoe	10	31 dozer	
200 track hoe	10	Loader	
Back hoe hammer		Mini hoe	

LABOR

NAME	OCCUPATION	START TIME:	STOP TIME:	HOURS
Tyler Hollis	Foreman	6:30	5:00	10.5
Jonathan Tenney	Labor	6:30	5:00	10.5
Statlin Ponder	Labor	6:30	3:00	NGC
Ethan Howle	Labor	6:30	5:00	10.5
Daniel DeJesus	Labor	6:30	3:00	NGC
			Total Crew Hours for Today:	31.5
			Total Crew Hours Cumulative:	13060.5

Details of Hauling/ Weight ticket # and tons

TRUCK	WEIGHT TICKET # / TONS	LOAD COUNT	Origin	DESTINATION
TC truck				
TC truck				
TC truck				
Jerry truck				
Jerry truck				
Teague truck				
Teague truck				
Benchmark truck				

Weather Report

Solutia OU-3 Remediation Action

Construction Daily Work Report

Day # _____

Project Number/Name:	OU-3
Safety Meeting Topic:	Heat Stress
Date:	6/9/16 Thursday

Activities/ Deliveries

Specific task working and or accomplished today:
Hauled rock to fill in cut in the borrow pit. 57 loads of rock moved.

EQUIPMENT	HOURS	EQUIPMENT	HOURS
Bobcat		Rock truck	10
270 track hoe	10	31 dozer	
200 track hoe	10	Loader	
Back hoe hammer		Mini hoe	

LABOR

NAME	OCCUPATION	START TIME:	STOP TIME:	HOURS
Tyler Hollis	Foreman	6:30	4:30	10
Jonathan Tenney	Labor	6:30	4:30	10
Statlin Ponder	Labor	6:30	2:30	NGC
Ethan Howle	Labor	6:30	4:30	10
Daniel DeJesus	Labor			
Statlin Ponder	Labor	2:30	4:30	2
			Total Crew Hours for Today:	32
			Total Crew Hours Cumulative:	13092.5

Details of Hauling/ Weight ticket # and tons

TRUCK	WEIGHT TICKET # / TONS	LOAD COUNT	Origin	DESTINATION
TC truck				
TC truck				
TC truck				
Jerry truck				
Jerry truck				
Teague truck				
Teague truck				
Benchmark truck				

Weather Report

Tyler Hollis

Solutia OU-3 Remediation Action

Construction Daily Work Report

Day # _____

Project Number/Name:	OU-3
Safety Meeting Topic:	
Date:	6/10/16 Friday

Activities/ Deliveries

Specific task working and or accomplished today:
Hauled rock to fill in cut in the borrow pit. 33 loads of rock moved. 11 loads of screened material hauled out of the borrow pit to stock pile.

EQUIPMENT	HOURS	EQUIPMENT	HOURS
Bobcat		Rock truck	10
270 track hoe	10	31 dozer	
200 track hoe	10	Loader	
Back hoe hammer		Mini hoe	

LABOR

NAME	OCCUPATION	START TIME:	STOP TIME:	HOURS
Tyler Hollis	Foreman	6:30	4:30	10
Jonathan Tenney	Labor	6:30	4:30	10
Statlin Ponder	Labor	6:30	2:30	NGC
Ethan Howle	Labor	6:30	4:30	10
Daniel DeJesus	Labor	6:30	2:30	NGC
Daniel DeJesus	Labor	2:30	4:30	2
			Total Crew Hours for Today:	32
			Total Crew Hours Cumulative:	13124.5

Details of Hauling/ Weight ticket # and tons

TRUCK	WEIGHT TICKET # / TONS	LOAD COUNT	Origin	DESTINATION
TC truck				
TC truck				
TC truck				
Jerry truck				
Jerry truck				
Teague truck				
Teague truck				
Benchmark truck				

Weather Report

Tyler Hollis

Solutia OU-3 Remediation Action

Construction Daily Work Report

Day # _____

Project Number/Name:	OU-3
Safety Meeting Topic:	
Date:	6/11/16 Saturday

Activities/ Deliveries

Specific task working and or accomplished today:
Hauled rock to fill in cut in the borrow pit. 37 loads of rock moved.

EQUIPMENT	HOURS	EQUIPMENT	HOURS
Bobcat		Rock truck	10
270 track hoe	10	31 dozer	
200 track hoe	10	Loader	
Back hoe hammer		Mini hoe	

LABOR

NAME	OCCUPATION	START TIME:	STOP TIME:	HOURS
Tyler Hollis	Foreman	6:30	2:30	8
Jonathan Tenney	Labor	6:30	2:30	8
Statlin Ponder	Labor	6:30	1:30	NGC
Ethan Howle	Labor	6:30	2:30	8
Daniel DeJesus	Labor	6:30	1:30	NGC
			Total Crew Hours for Today:	24
			Total Crew Hours Cumulative:	13148.5

Details of Hauling/ Weight ticket # and tons

TRUCK	WEIGHT TICKET # / TONS	LOAD COUNT	Origin	DESTINATION
TC truck				
TC truck				
TC truck				
Jerry truck				
Jerry truck				
Teague truck				
Teague truck				
Benchmark truck				

Weather Report

Tyler Hollis

Solutia OU-3 Remediation Action

Construction Daily Work Report

Day # _____

Project Number/Name:	OU-3
Safety Meeting Topic:	
Date:	6/12/16 Sunday

Activities/ Deliveries

Specific task working and or accomplished today:
Hauled rock to fill in cut in the borrow pit. 28 loads of rock moved.

EQUIPMENT	HOURS	EQUIPMENT	HOURS
Bobcat		Rock truck	7
270 track hoe	7	31 dozer	
200 track hoe	7	Loader	
Back hoe hammer		Mini hoe	

LABOR

NAME	OCCUPATION	START TIME:	STOP TIME:	HOURS
Tyler Hollis	Foreman	6:30	2:00	7.5
Jonathan Tenney	Labor	6:30	2:00	7.5
Statlin Ponder	Labor			
Ethan Howle	Labor	6:30	2:00	7.5
Daniel DeJesus	Labor	6:30	11:00	4.5
			Total Crew Hours for Today:	27
			Total Crew Hours Cumulative:	13175.5

Details of Hauling/ Weight ticket # and tons

TRUCK	WEIGHT TICKET # / TONS	LOAD COUNT	Origin	DESTINATION
TC truck				
TC truck				
TC truck				
Jerry truck				
Jerry truck				
Teague truck				
Teague truck				
Benchmark truck				

Weather Report

Tyler Hollis

Solutia OU-3 Remediation Action

Construction Daily Work Report

Day # _____

Project Number/Name:	OU-3
Safety Meeting Topic:	Slips trips and falls
Date:	6/13/16 Monday

Activities/ Deliveries

Specific task working and or accomplished today:
Hauled rock to fill in cut in the borrow pit. 38 loads of rock.

EQUIPMENT	HOURS	EQUIPMENT	HOURS
Bobcat		Rock truck	10
270 track hoe	10	31 dozer	
200 track hoe	10	Loader	
Back hoe hammer		Mini hoe	

LABOR

NAME	OCCUPATION	START TIME:	STOP TIME:	HOURS
Tyler Hollis	Foreman	6:30	4:30	10
Jonathan Tenney	Labor	6:30	4:30	10
Statlin Ponder	Labor			
Ethan Howle	Labor	6:30	4:30	10
Daniel DeJesus	Labor	1:30	4:30	3
Daniel DeJesus	Labor	6:30	1:30	NGC
			Total Crew Hours for Today:	33
			Total Crew Hours Cumulative:	13208.5

Details of Hauling/ Weight ticket # and tons

TRUCK	WEIGHT TICKET # / TONS	LOAD COUNT	Origin	DESTINATION
TC truck				
TC truck				
TC truck				
Jerry truck				
Jerry truck				
Teague truck				
Teague truck				
Benchmark truck				

Weather Report

Tyler Hollis

Solutia OU-3 Remediation Action

Construction Daily Work Report

Day # _____

Project Number/Name:	OU-3 #1502
Safety Meeting Topic:	30 min lighting rule
Date:	6/14/16 Tuesday

Activities/ Deliveries

Specific task working and or accomplished today:
Hauled rock to fill in cut in the borrow pit. 68 loads of rock.

EQUIPMENT	HOURS	EQUIPMENT	HOURS
Bobcat		Rock truck	10
270 track hoe	10	31 dozer	
200 track hoe	10	Loader	
Back hoe hammer		Mini hoe	

LABOR

NAME	OCCUPATION	START TIME:	STOP TIME:	HOURS
Tyler Hollis	Foreman	6:30	4:30	10
Jonathan Tenney	Labor	6:30	4:30	10
Statlin Ponder	Labor			
Ethan Howle	Labor	6:30	4:30	10
Daniel DeJesus	Labor	9:30	4:30	7
Daniel DeJesus	Labor	6:30	9:30	#1608 NGC
			Total Crew Hours for Today:	37
			Total Crew Hours Cumulative:	13245.5

Details of Hauling/ Weight ticket # and tons

TRUCK	WEIGHT TICKET # / TONS	LOAD COUNT	Origin	DESTINATION
TC truck				
TC truck				
TC truck				
Jerry truck				
Jerry truck				
Teague truck				
Teague truck				
Benchmark truck				

Weather Report

Tyler Hollis

Solutia OU-3 Remediation Action

Construction Daily Work Report **Day #** _____

Project Number/Name:	OU-3 #1502
Safety Meeting Topic:	Unstable soil
Date:	6/15/16 Wednesday

Activities/ Deliveries

Specific task working and or accomplished today:
Hauled rock to fill in cut in the borrow pit. 45 loads of rock.

EQUIPMENT	HOURS	EQUIPMENT	HOURS
Bobcat		Rock truck	10
270 track hoe	10	31 dozer	
200 track hoe	10	Loader	
Back hoe hammer		Mini hoe	

LABOR

NAME	OCCUPATION	START TIME:	STOP TIME:	HOURS
Tyler Hollis	Foreman	6:30	4:30	10
Jonathan Tenney	Labor	6:30	4:30	10
Statlin Ponder	Labor			
Ethan Howle	Labor	6:30	4:30	10
Daniel DeJesus	Labor	6:30	2:30	NGC #1608
			Total Crew Hours for Today:	30
			Total Crew Hours Cumulative:	13275.5

Details of Hauling/ Weight ticket # and tons

TRUCK	WEIGHT TICKET # / TONS	LOAD COUNT	Origin	DESTINATION
TC truck				
TC truck				
TC truck				
Jerry truck				
Jerry truck				
Teague truck				
Teague truck				
Benchmark truck				

Weather Report

Tyler Hollis

Solutia OU-3 Remediation Action

Construction Daily Work Report

Day # _____

Project Number/Name:	OU-3 #1502
Safety Meeting Topic:	Hydration
Date:	6/16/16 Thursday

Activities/ Deliveries

Specific task working and or accomplished today:
Hauled rock to fill in cut in the borrow pit. 47 loads of rock.

EQUIPMENT	HOURS	EQUIPMENT	HOURS
Bobcat		Rock truck	10
270 track hoe	10	31 dozer	
200 track hoe	10	Loader	
Back hoe hammer		Mini hoe	

LABOR

NAME	OCCUPATION	START TIME:	STOP TIME:	HOURS
Tyler Hollis	Foreman	6:30	4:30	10
Jonathan Tenney	Labor	6:30	4:30	10
Statlin Ponder	Labor			
Ethan Howle	Labor	6:30	4:30	10
Daniel DeJesus	Labor	6:30	7:00	Sports complex. 12.5
			Total Crew Hours for Today:	30
			Total Crew Hours Cumulative:	13305.5

Details of Hauling/ Weight ticket # and tons

TRUCK	WEIGHT TICKET # / TONS	LOAD COUNT	Origin	DESTINATION
TC truck				
TC truck				
TC truck				
Jerry truck				
Jerry truck				
Teague truck				
Teague truck				
Benchmark truck				

Weather Report

Tyler Hollis

Solutia OU-3 Remediation Action

Construction Daily Work Report

Day # _____

Project Number/Name:	OU-3 #1502
Safety Meeting Topic:	Wet conditions
Date:	6/17/16 Friday

Activities/ Deliveries

Specific task working and or accomplished today:
Pulled rock off the south slope of the borrow pit and put it in fill.

EQUIPMENT	HOURS	EQUIPMENT	HOURS
Bobcat		Rock truck	8
270 track hoe	8	31 dozer	
200 track hoe	8	Loader	
Back hoe hammer		Mini hoe	

LABOR

NAME	OCCUPATION	START TIME:	STOP TIME:	HOURS
Tyler Hollis	Foreman	6:30	2:30	8
Jonathan Tenney	Labor	6:30	2:30	8
Statlin Ponder	Labor			
Ethan Howle	Labor	6:30	2:30	8
Daniel DeJesus	Labor	6:30	2:30	8
			Total Crew Hours for Today:	32
			Total Crew Hours Cumulative:	13337.5

Details of Hauling/ Weight ticket # and tons

TRUCK	WEIGHT TICKET # / TONS	LOAD COUNT	Origin	DESTINATION
TC truck				
TC truck				
TC truck				
Jerry truck				
Jerry truck				
Teague truck				
Teague truck				
Benchmark truck				

Weather Report

Tyler Hollis

Solutia OU-3 Remediation Action

Construction Daily Work Report

Day # _____

Project Number/Name:	OU-3 #1502
Safety Meeting Topic:	Work rest cycle
Date:	6/20/16 Monday

Activities/ Deliveries

Specific task working and or accomplished today:
40 loads of rock hauled to fill in cut in the borrow pit.

EQUIPMENT	HOURS	EQUIPMENT	HOURS
Bobcat		Rock truck	10
270 track hoe	10	31 dozer	
200 track hoe	10	Loader	
Back hoe hammer		Mini hoe	

LABOR

NAME	OCCUPATION	START TIME:	STOP TIME:	HOURS
Tyler Hollis	Foreman	6:30	5:30	11
Jonathan Tenney	Labor	6:30	5:30	11
Statlin Ponder	Labor	6:30	5:30	NGC #1608
Ethan Howle	Labor	6:30	2:00	7.5
Daniel DeJesus	Labor	6:30	5:30	11
			Total Crew Hours for Today:	40.5
			Total Crew Hours Cumulative:	13378

Details of Hauling/ Weight ticket # and tons

TRUCK	WEIGHT TICKET # / TONS	LOAD COUNT	Origin	DESTINATION
TC truck				
TC truck				
TC truck				
Jerry truck				
Jerry truck				
Teague truck				
Teague truck				
Benchmark truck				

Weather Report

Tyler Hollis

Solutia OU-3 Remediation Action

Construction Daily Work Report

Day # _____

Project Number/Name:	OU-3 #1502
Safety Meeting Topic:	Hydration
Date:	6/21/16 Tuesday

Activities/ Deliveries

Specific task working and or accomplished today:
49 loads of rock hauled to fill in cut in the borrow pit.

EQUIPMENT	HOURS	EQUIPMENT	HOURS
Bobcat		Rock truck	10
270 track hoe	10	31 dozer	
200 track hoe	10	Loader	
Back hoe hammer		Mini hoe	

LABOR

NAME	OCCUPATION	START TIME:	STOP TIME:	HOURS
Tyler Hollis	Foreman	6:30	4:30	10
Jonathan Tenney	Labor	6:30	4:30	10
Statlin Ponder	Labor	6:30	4:30	NGC #1608
Ethan Howle	Labor	6:30	4:30	10
Daniel DeJesus	Labor	6:30	4:30	10
			Total Crew Hours for Today:	40
			Total Crew Hours Cumulative:	13418

Details of Hauling/ Weight ticket # and tons

TRUCK	WEIGHT TICKET # / TONS	LOAD COUNT	Origin	DESTINATION
TC truck				
TC truck				
TC truck				
Jerry truck				
Jerry truck				
Teague truck				
Teague truck				
Benchmark truck				

Weather Report

Tyler Hollis

Solutia OU-3 Remediation Action

Construction Daily Work Report **Day #** _____

Project Number/Name:	OU-3 #1502
Safety Meeting Topic:	Heat injury
Date:	6/22/16 Wednesday

Activities/ Deliveries

Specific task working and or accomplished today:
42 loads of rock hauled to fill in cut in the borrow pit.

EQUIPMENT	HOURS	EQUIPMENT	HOURS
Bobcat		Rock truck	10
270 track hoe	10	31 dozer	
200 track hoe	10	Loader	
Back hoe hammer		Mini hoe	

LABOR

NAME	OCCUPATION	START TIME:	STOP TIME:	HOURS
Tyler Hollis	Foreman	6:30	5:00	10.5
Jonathan Tenney	Labor	6:30	5:00	10.5
Statlin Ponder	Labor	6:30	4:30	NGC #1608
Ethan Howle	Labor	6:30	5:00	10.5
Daniel DeJesus	Labor	6:30	5:00	10.5
			Total Crew Hours for Today:	42
			Total Crew Hours Cumulative:	13460

Details of Hauling/ Weight ticket # and tons

TRUCK	WEIGHT TICKET # / TONS	LOAD COUNT	Origin	DESTINATION
TC truck				
TC truck				
TC truck				
Jerry truck				
Jerry truck				
Teague truck				
Teague truck				
Benchmark truck				

Weather Report

Tyler Hollis

Solutia OU-3 Remediation Action

Construction Daily Work Report

Day # _____

Project Number/Name:	OU-3
Safety Meeting Topic:	HEAT INJURIES
Date:	WED. 6/22/16

Activities/ Deliveries

Specific task working and or accomplished today:
WORKING ON PUNCH LIST ITEMS. COMPLETED # 9, 14, 22, AND 23

EQUIPMENT	HOURS	EQUIPMENT	HOURS

LABOR

NAME	OCCUPATION	START TIME:	STOP TIME:	HOURS
SONNY PATAT		6:30 A.M.	4:00 P.M.	9
JAMES FORD		6:30 A.M.	4:00 P.M.	9
DEMARCUS LOYA		6:30 A.M.	4:00 P.M.	9
MIKE ELLIO		6:30 A.M.	11:00 A.M.	4.5
			Total Crew Hours for Today:	31.5
			Total Crew Hours Cumulative:	

Details of Hauling/ Weight ticket # and tons

TRUCK	WEIGHT TICKET # / TONS	LOAD COUNT	ORIGIN	DESTINATION

Weather Report

Solutia OU-3 Remediation Action

Construction Daily Work Report

Day # _____

Project Number/Name:	OU-3
Safety Meeting Topic:	HEAT STRESS
Date:	6/23/16 THURSDAY

Activities/ Deliveries

Specific task working and or accomplished today:
WORKING ON PUNCH LIST ITEMS, COMPLETED #25, DUG OUT AROUND BROKEN TOP AT #13 AND POURED NEW TOP FOR IT.

EQUIPMENT	HOURS	EQUIPMENT	HOURS

LABOR

NAME	OCCUPATION	START TIME:	STOP TIME:	HOURS
SONNY PATAT		6:30 A.M.	3:30 P.M.	8.5
JAMES FORD		6:36 A.M	2:00 P.M.	7
DOMARCUS LOYA		6:30 A.M.	3:00 P.M.	8
MALE' LILIO		6:30 A.M.	3:30 P.M.	8.5
			Total Crew Hours for Today:	32
			Total Crew Hours Cumulative:	

Details of Hauling/ Weight ticket # and tons

TRUCK	WEIGHT TICKET # / TONS	LOAD COUNT	ORIGIN	DESTINATION

Weather Report

Solutia OU-3 Remediation Action

Construction Daily Work Report

Day # _____

Project Number/Name:	OU-3 #1502
Safety Meeting Topic:	Heat stress
Date:	6/23/16 Thursday

Activities/ Deliveries

Specific task working and or accomplished today:
55 loads of rock hauled to fill in cut in the borrow pit.

EQUIPMENT	HOURS	EQUIPMENT	HOURS
Bobcat		Rock truck	10
270 track hoe	10	31 dozer	
200 track hoe	10	Loader	
Back hoe hammer		Mini hoe	

LABOR

NAME	OCCUPATION	START TIME:	STOP TIME:	HOURS
Tyler Hollis	Foreman	6:30	4:30	10
Jonathan Tenney	Labor	6:30	10:30	4
Statlin Ponder	Labor	6:30	3:00	NGC #1608
Ethan Howle	Labor	6:30	4:30	10
Daniel DeJesus	Labor	6:30	4:30	10
			Total Crew Hours for Today:	34
			Total Crew Hours Cumulative:	13494

Details of Hauling/ Weight ticket # and tons

TRUCK	WEIGHT TICKET # / TONS	LOAD COUNT	Origin	DESTINATION
TC truck				
TC truck				
TC truck				
Jerry truck				
Jerry truck				
Teague truck				
Teague truck				
Benchmark truck				

Weather Report

Tyler Hollis

Solutia OU-3 Remediation Action

Construction Daily Work Report

Day # _____

Project Number/Name:	OU-3 #1502
Safety Meeting Topic:	Sun Exsposure
Date:	6/24/16 Friday

Activities/ Deliveries

Specific task working and or accomplished today:
54 loads of rock hauled to fill in cut in the borrow pit.

EQUIPMENT	HOURS	EQUIPMENT	HOURS
Bobcat		Rock truck	10
270 track hoe	10	31 dozer	
200 track hoe	10	Loader	
61 dozer	2	Mini hoe	

LABOR

NAME	OCCUPATION	START TIME:	STOP TIME:	HOURS
Tyler Hollis	Foreman	6:30	4:30	10
Jonathan Tenney	Labor	6:30	4:30	10
Statlin Ponder	Labor	6:30	4:30	NGC #1608
Ethan Howle	Labor	6:30	4:30	10
Daniel DeJesus	Labor	6:30	4:30	NGC #1608
			Total Crew Hours for Today:	30
			Total Crew Hours Cumulative:	13524

Details of Hauling/ Weight ticket # and tons

TRUCK	WEIGHT TICKET # / TONS	LOAD COUNT	Origin	DESTINATION
TC truck				
TC truck				
TC truck				
Jerry truck				
Jerry truck				
Teague truck				
Teague truck				
Benchmark truck				

Weather Report

Tyler Hollis

Solutia OU-3 Remediation Action

Construction Daily Work Report

Day # _____

Project Number/Name:	OU-3
Safety Meeting Topic:	EXPOSURE (SUNSCREEN)
Date:	6/24/16 FRIDAY

Activities/ Deliveries

Specific task working and or accomplished today:
WORKING ON PUNCH LIST

EQUIPMENT	HOURS	EQUIPMENT	HOURS

LABOR

NAME	OCCUPATION	START TIME:	STOP TIME:	HOURS
SONNY PATAT		6:30 A.M.	10:00 A.M.	
JAMES FORD		OUT		
EDDARCUS LOYA		6:30 A.M.	4:30 P.M.	
MOLE' LILO		6:30 A.M.	4:30 P.M.	
			Total Crew Hours for Today:	
			Total Crew Hours Cumulative:	

Details of Hauling/ Weight ticket # and tons

TRUCK	WEIGHT TICKET # / TONS	LOAD COUNT	ORIGIN	DESTINATION

Weather Report

Solutia OU-3 Remediation Action

Construction Daily Work Report **Day #** _____

Project Number/Name:	OU-3 #1502
Safety Meeting Topic:	Fatigue
Date:	6/25/16 Saturday

Activities/ Deliveries

Specific task working and or accomplished today:
25 loads of rock hauled to fill in cut in the borrow pit. Worked south slope of pit.

EQUIPMENT	HOURS	EQUIPMENT	HOURS
Bobcat		Rock truck	5
270 track hoe	5	31 dozer	
200 track hoe		Loader	
61 dozer	5	Mini hoe	

LABOR

NAME	OCCUPATION	START TIME:	STOP TIME:	HOURS
Tyler Hollis	Foreman	6:30	11:30	5
Jonathan Tenney	Labor	6:30	11:30	5
Statlin Ponder	Labor			
Ethan Howle	Labor	6:30	11:30	5
Daniel DeJesus	Labor			
			Total Crew Hours for Today:	15
			Total Crew Hours Cumulative:	13539

Details of Hauling/ Weight ticket # and tons

TRUCK	WEIGHT TICKET # / TONS	LOAD COUNT	Origin	DESTINATION
TC truck				
TC truck				
TC truck				
Jerry truck				
Jerry truck				
Teague truck				
Teague truck				
Benchmark truck				

Weather Report

Tyler Hollis

Solutia OU-3 Remediation Action

Construction Daily Work Report **Day #** _____

Project Number/Name:	OU-3 1502
Safety Meeting Topic:	Terrain footing
Date:	6/27/16 Monday

Activities/ Deliveries

Specific task working and or accomplished today:
Moved rock to fill in cut at borrow pit. 27 loads of rock.

EQUIPMENT	HOURS	EQUIPMENT	HOURS
Bobcat		Rock truck	6
270 track hoe	6	31 dozer	
200 track hoe	6	Loader	
61 dozer		Mini hoe	

LABOR

NAME	OCCUPATION	START TIME:	STOP TIME:	HOURS
Tyler Hollis	Foreman	10:30	5:00	6.5
Jonathan Tenney	Labor	10:30	5:00	6.5
Statlin Ponder	Labor	10:30	5:00	NGC
Ethan Howle	Labor	10:30	1:00	2.5
Daniel DeJesus	Labor	10:30	5:00	NGC
			Total Crew Hours for Today:	15.5
			Total Crew Hours Cumulative:	13554.5

Details of Hauling/ Weight ticket # and tons

TRUCK	WEIGHT TICKET # / TONS	LOAD COUNT	Origin	DESTINATION
TC truck				
TC truck				
TC truck				
Jerry truck				
Jerry truck				
Teague truck				
Teague truck				
Benchmark truck				

Weather Report

Tyler Hollis

Solutia OU-3 Remediation Action

Construction Daily Work Report

Day # _____

Project Number/Name:	OU-3 1502
Safety Meeting Topic:	Spotting
Date:	6/28/16 Tuesday

Activities/ Deliveries

Specific task working and or accomplished today:
Buried the bigger rock and shaped with the dozer.

EQUIPMENT	HOURS	EQUIPMENT	HOURS
Bobcat		Rock truck	
270 track hoe	8	31 dozer	
200 track hoe	8	Loader	
61 dozer	8	Mini hoe	

LABOR

NAME	OCCUPATION	START TIME:	STOP TIME:	HOURS
Tyler Hollis	Foreman	6:30	2:30	8
Jonathan Tenney	Labor	6:30	4:00	9.5
Statlin Ponder	Labor	6:30	4:30	NGC
Ethan Howle	Labor	6:30	4:00	9.5
Daniel DeJesus	Labor	6:30	4:30	NGC
			Total Crew Hours for Today:	27
			Total Crew Hours Cumulative:	13554.5

Details of Hauling/ Weight ticket # and tons

TRUCK	WEIGHT TICKET # / TONS	LOAD COUNT	Origin	DESTINATION
TC truck				
TC truck				
TC truck				
Jerry truck				
Jerry truck				
Teague truck				
Teague truck				
Benchmark truck				

Weather Report

Tyler Hollis

Solutia OU-3 Remediation Action

Construction Daily Work Report

Day # _____

Project Number/Name:	Solutia OU-3
Safety Meeting Topic:	Spotting
Date:	Tuesday, June 28, 2016

Activities/ Deliveries

Specific task working and or accomplished today:

Working on Punch List Items. Grounding Fence.

EQUIPMENT	HOURS	EQUIPMENT	HOURS
F250 Pickup	8.5		

LABOR

NAME	OCCUPATION	START TIME:	STOP TIME:	HOURS
Sonny Patat	Foreman	6:30	3:30pm	8.5
James Ford	Laborer	6:30	3:30pm	8.5
D'maracu Loya	Laborer	6:30	3:30pm	8.5
Mile' Lilio	Laborer	6:30	3:30pm	8.5
			Total Crew Hours for Today:	34
			Total Crew Hours Cumulative:	1379

Details of Hauling/ Weight ticket # and tons

TRUCK	WEIGHT TICKET # / TONS	LOAD COUNT	ORIGIN	DESTINATION

Weather Report

Solutia OU-3 Remediation Action

Construction Daily Work Report

Day # _____

Project Number/Name:	OU-3 1502
Safety Meeting Topic:	
Date:	6/29/16 Wednesday

Activities/ Deliveries

Specific task working and or accomplished today:
23 loads of rock hauled to fill in cut at the borrow pit.

EQUIPMENT	HOURS	EQUIPMENT	HOURS
Bobcat		Rock truck	
270 track hoe	8	31 dozer	
200 track hoe	8	Loader	
61 dozer	8	Mini hoe	

LABOR

NAME	OCCUPATION	START TIME:	STOP TIME:	HOURS
Tyler Hollis	Foreman	6:30	2:30	8
Jonathan Tenney	Labor	6:30	4:30	10
Statlin Ponder	Labor	6:30	4:30	NGC
Ethan Howle	Labor	6:30	3:00	8.5
Daniel DeJesus	Labor	6:30	4:30	NGC
			Total Crew Hours for Today:	26.5
			Total Crew Hours Cumulative:	13608

Details of Hauling/ Weight ticket # and tons

TRUCK	WEIGHT TICKET # / TONS	LOAD COUNT	Origin	DESTINATION
TC truck				
TC truck				
TC truck				
Jerry truck				
Jerry truck				
Teague truck				
Teague truck				
Benchmark truck				

Weather Report

Tyler Hollis

Solutia OU-3 Remediation Action

Construction Daily Work Report

Day # _____

Project Number/Name:	Solutia OU-3
Safety Meeting Topic:	PPE
Date:	Tuesday, July 5, 2016

Activities/ Deliveries

Specific task working and or accomplished today:

Grounding System for Fencing

EQUIPMENT	HOURS	EQUIPMENT	HOURS
F250 Pickup	8		

LABOR

NAME	OCCUPATION	START TIME:	STOP TIME:	HOURS
Sonny Patat	Foreman	6:30	3:00pm	8
James Ford	Laborer	0:00	0	0
D'maracu Loya	Laborer	6:30	3:00pm	8
Mile' Lilio	Laborer	6:30	3:00pm	8
			Total Crew Hours for Today:	24
			Total Crew Hours Cumulative:	1403

Details of Hauling/ Weight ticket # and tons

TRUCK	WEIGHT TICKET # / TONS	LOAD COUNT	ORIGIN	DESTINATION

Weather Report

Solutia OU-3 Remediation Action

Construction Daily Work Report

Day # _____

Project Number/Name:	Solutia OU-3
Safety Meeting Topic:	Slipping on rough or wet terrain
Date:	Wednesday, July 6, 2016

Activities/ Deliveries

Specific task working and or accomplished today:

Grounding System for Fencing. Building check dams in Areas C & D

EQUIPMENT	HOURS	EQUIPMENT	HOURS
F250 Pickup	9		

LABOR

NAME	OCCUPATION	START TIME:	STOP TIME:	HOURS
Sonny Patat	Foreman	6:30	4:00pm	9
James Ford	Laborer	6:30	4:00pm	9
D'maracu Loya	Laborer	6:30	4:00pm	9
Mile' Lilio	Laborer	6:30	3:00pm	8
			Total Crew Hours for Today:	35
			Total Crew Hours Cumulative:	1438

Details of Hauling/ Weight ticket # and tons

TRUCK	WEIGHT TICKET # / TONS	LOAD COUNT	ORIGIN	DESTINATION

Weather Report

Solutia OU-3 Remediation Action

Construction Daily Work Report

Day # _____

Project Number/Name:	Solutia OU-3
Safety Meeting Topic:	Lightening Awareness & Precautions
Date:	Thursday, July 7, 2016

Activities/ Deliveries

Specific task working and or accomplished today:

Grounding System for Fencing.

EQUIPMENT	HOURS	EQUIPMENT	HOURS
F250 Pickup	9		

LABOR

NAME	OCCUPATION	START TIME:	STOP TIME:	HOURS
Sonny Patat	Foreman	6:30	4:00pm	9
James Ford	Laborer	6:30	4:00pm	9
D'maracu Loya	Laborer	6:30	4:00pm	9
Mile' Lilio	Laborer	0:00	0	0
			Total Crew Hours for Today:	27
			Total Crew Hours Cumulative:	1465

Details of Hauling/ Weight ticket # and tons

TRUCK	WEIGHT TICKET # / TONS	LOAD COUNT	ORIGIN	DESTINATION

Weather Report

Solutia OU-3 Remediation Action

Construction Daily Work Report

Day # _____

Project Number/Name:	OU-3 1502
Safety Meeting Topic:	
Date:	7/16/16 Saturday

Activities/ Deliveries

Specific task working and or accomplished today:
Spread topsoil in borrow pit. 22 loads of topsoil hauled into borrow pit from stock pile.

EQUIPMENT	HOURS	EQUIPMENT	HOURS
Bobcat		Rock truck	8
270 track hoe	8	61 dozer	
200 track hoe		Loader	
37 dozer	8	Mini hoe	

LABOR

NAME	OCCUPATION	START TIME:	STOP TIME:	HOURS
Tyler Hollis	Foreman	VC		
Jonathan Tenney	Labor	6:30	2:30	8
Statlin Ponder	Labor	6:30	2:30	8
Ethan Howle	Labor	6:30	2:30	8
			Total Crew Hours for Today:	24
			Total Crew Hours Cumulative:	13756.5

Details of Hauling/ Weight ticket # and tons

TRUCK	WEIGHT TICKET # / TONS	LOAD COUNT	Origin	DESTINATION
TC truck		22 Topsoil	Borrow Source Stockpile	Borrow Source
TC truck				
TC truck				
Jerry truck				
Jerry truck				
Teague truck				
Teague truck				
Benchmark truck				

Weather Report

Tyler Hollis

Solutia OU-3 Remediation Action

Construction Daily Work Report

Day # _____

Project Number/Name:	OU-3 1502
Safety Meeting Topic:	
Date:	7/12/16 Tuesday

Activities/ Deliveries

Specific task working and or accomplished today:
Finished moving rock. Got the rock fill ready for topsoil.

EQUIPMENT	HOURS	EQUIPMENT	HOURS
Bobcat		Rock truck	9.5
270 track hoe	9.5	61 dozer	4.5
200 track hoe	9.5	Loader	
37 dozer	4.5	Mini hoe	

LABOR

NAME	OCCUPATION	START TIME:	STOP TIME:	HOURS
Tyler Hollis	Foreman	VC		
Jonathan Tenney	Labor	6:30	4:30	10
Statlin Ponder	Labor	6:30	4:30	10
Ethan Howle	Labor	6:30	4:30	10
			Total Crew Hours for Today:	30
			Total Crew Hours Cumulative:	13638

Details of Hauling/ Weight ticket # and tons

TRUCK	WEIGHT TICKET # / TONS	LOAD COUNT	Origin	DESTINATION
TC truck		28 Rock	borrow Source	Borrow Source
TC truck				
TC truck				
Jerry truck				
Jerry truck				
Teague truck				
Teague truck				
Benchmark truck				

Weather Report

Tyler Hollis

Solutia OU-3 Remediation Action

Construction Daily Work Report

Day # _____

Project Number/Name:	OU-3 1502
Safety Meeting Topic:	
Date:	7/13/16 Wednesday

Activities/ Deliveries

Specific task working and or accomplished today:
Got the south and east slopes cover with topsoil.

EQUIPMENT	HOURS	EQUIPMENT	HOURS
Bobcat		Rock truck	10
270 track hoe	10	61 dozer	
200 track hoe		Loader	
37 dozer	10	Mini hoe	

LABOR

NAME	OCCUPATION	START TIME:	STOP TIME:	HOURS
Tyler Hollis	Foreman	VC		
Jonathan Tenney	Labor	6:30	5:00	10.5
Statlin Ponder	Labor	6:30	5:00	10.5
Ethan Howle	Labor	6:30	5:00	10.5
			Total Crew Hours for Today:	31.5
			Total Crew Hours Cumulative:	13669.5

Details of Hauling/ Weight ticket # and tons

TRUCK	WEIGHT TICKET # / TONS	LOAD COUNT	Origin	DESTINATION
TC truck		28 Topsoil	BS Stock Pile	Borrow Source
TC truck				
TC truck				
Jerry truck				
Jerry truck				
Teague truck				
Teague truck				
Benchmark truck				

Weather Report

Tyler Hollis

Solutia OU-3 Remediation Action

Construction Daily Work Report

Day # _____

Project Number/Name:	OU-3 1502
Safety Meeting Topic:	
Date:	7/14/16 Thursday

Activities/ Deliveries

Specific task working and or accomplished today:
Started in the south east corner of the borrow pit spreading topsoil in the bottom.

EQUIPMENT	HOURS	EQUIPMENT	HOURS
Bobcat		Rock truck	10
270 track hoe	10	61 dozer	
200 track hoe		Loader	
37 dozer	10	Mini hoe	

LABOR

NAME	OCCUPATION	START TIME:	STOP TIME:	HOURS
Tyler Hollis	Foreman	VC		
Jonathan Tenney	Labor	6:30	5:30	11
Statlin Ponder	Labor	6:30	5:30	11
Ethan Howle	Labor	6:30	5:30	11
			Total Crew Hours for Today:	33
			Total Crew Hours Cumulative:	13702.5

Details of Hauling/ Weight ticket # and tons

TRUCK	WEIGHT TICKET # / TONS	LOAD COUNT	Origin	DESTINATION
TC truck		27 Topsoil	BS Topsoil Stockpile	Borrow Source
TC truck				
TC truck				
Jerry truck				
Jerry truck				
Teague truck				
Teague truck				
Benchmark truck				

Weather Report

Tyler Hollis

Solutia OU-3 Remediation Action

Construction Daily Work Report

Day # _____

Project Number/Name:	OU-3 1502
Safety Meeting Topic:	
Date:	7/15/16 Friday

Activities/ Deliveries

Specific task working and or accomplished today:
Spread topsoil in borrow pit. 28 loads of topsoil hauled into borrow pit from stock pile.

EQUIPMENT	HOURS	EQUIPMENT	HOURS
Bobcat		Rock truck	10
270 track hoe	10	61 dozer	
200 track hoe		Loader	
37 dozer	10	Mini hoe	

LABOR

NAME	OCCUPATION	START TIME:	STOP TIME:	HOURS
Tyler Hollis	Foreman	VC		
Jonathan Tenney	Labor	6:30	4:30	10
Statlin Ponder	Labor	6:30	4:30	10
Ethan Howle	Labor	6:30	4:30	10
			Total Crew Hours for Today:	30
			Total Crew Hours Cumulative:	13732.5

Details of Hauling/ Weight ticket # and tons

TRUCK	WEIGHT TICKET # / TONS	LOAD COUNT	Origin	DESTINATION
TC truck		28 Topsoil	BS Topsoil Stockpile	Borrow Source
TC truck				
TC truck				
Jerry truck				
Jerry truck				
Teague truck				
Teague truck				
Benchmark truck				

Weather Report

Tyler Hollis

Solutia OU-3 Remediation Action

Construction Daily Work Report

Day # _____

Project Number/Name:	OU-3 1502
Safety Meeting Topic:	
Date:	7/16/16 Saturday

Activities/ Deliveries

Specific task working and or accomplished today:
Spread topsoil in borrow pit. 22 loads of topsoil hauled into borrow pit from stock pile.

EQUIPMENT	HOURS	EQUIPMENT	HOURS
Bobcat		Rock truck	8
270 track hoe	8	61 dozer	
200 track hoe		Loader	
37 dozer	8	Mini hoe	

LABOR

NAME	OCCUPATION	START TIME:	STOP TIME:	HOURS
Tyler Hollis	Foreman	VC		
Jonathan Tenney	Labor	6:30	2:30	8
Statlin Ponder	Labor	6:30	2:30	8
Ethan Howle	Labor	6:30	2:30	8
			Total Crew Hours for Today:	24
			Total Crew Hours Cumulative:	13756.5

Details of Hauling/ Weight ticket # and tons

TRUCK	WEIGHT TICKET # / TONS	LOAD COUNT	Origin	DESTINATION
TC truck		22 Topsoil	Borrow Source Stockpile	Borrow Source
TC truck				
TC truck				
Jerry truck				
Jerry truck				
Teague truck				
Teague truck				
Benchmark truck				

Weather Report

Tyler Hollis

Solutia OU-3 Remediation Action

Construction Daily Work Report

Day # _____

Project Number/Name:	OU-3 1502
Safety Meeting Topic:	HAVS
Date:	7/18/16 Monday

Activities/ Deliveries

Specific task working and or accomplished today:
Spread topsoil in borrow pit. 48 loads of topsoil hauled into borrow pit from stock pile.

EQUIPMENT	HOURS	EQUIPMENT	HOURS
Bobcat		Rock truck	10
270 track hoe	10	61 dozer	
200 track hoe		Loader	
37 dozer	10	Mini hoe	

LABOR

NAME	OCCUPATION	START TIME:	STOP TIME:	HOURS
Tyler Hollis	Foreman	6:30	4:30	10
Jonathan Tenney	Labor	6:30	4:30	10
Statlin Ponder	Labor	6:30	5:00	Bud
Ethan Howle	Labor	6:30	4:30	10
			Total Crew Hours for Today:	30
			Total Crew Hours Cumulative:	13786.5

Details of Hauling/ Weight ticket # and tons

TRUCK	WEIGHT TICKET # / TONS	LOAD COUNT	Origin	DESTINATION
TC truck				
TC truck				
TC truck				
Jerry truck				
Jerry truck				
Teague truck				
Teague truck				
Benchmark truck				

Weather Report

Tyler Hollis

Solutia OU-3 Remediation Action

Construction Daily Work Report

Day # _____

Project Number/Name:	OU-3 1502
Safety Meeting Topic:	HAVS
Date:	7/19/16 Tuesday

Activities/ Deliveries

Specific task working and or accomplished today:
Spread topsoil in borrow pit. 24 loads of topsoil hauled into borrow pit from stock pile.

EQUIPMENT	HOURS	EQUIPMENT	HOURS
Bobcat		Rock truck	10
270 track hoe	10	61 dozer	
200 track hoe		Loader	
37 dozer	10	Mini hoe	

LABOR

NAME	OCCUPATION	START TIME:	STOP TIME:	HOURS
Tyler Hollis	Foreman	6:30	4:30	10
Jonathan Tenney	Labor	6:30	4:30	10
Ethan Howle	Labor	6:30	4:30	10
			Total Crew Hours for Today:	30
			Total Crew Hours Cumulative:	13816.5

Details of Hauling/ Weight ticket # and tons

TRUCK	WEIGHT TICKET # / TONS	LOAD COUNT	Origin	DESTINATION
TC truck				
TC truck				
TC truck				
Jerry truck				
Jerry truck				
Teague truck				
Teague truck				
Benchmark truck				

Weather Report

Tyler Hollis

Solutia OU-3 Remediation Action

Construction Daily Work Report

Day # _____

Project Number/Name:	OU-3 1502
Safety Meeting Topic:	Inspection sheets
Date:	7/20/16 Wednesday

Activities/ Deliveries

Specific task working and or accomplished today:
Finished topsoil in borrow pit and under power line ready for seed and hay.

EQUIPMENT	HOURS	EQUIPMENT	HOURS
Bobcat		Rock truck	8
270 track hoe	8	61 dozer	
200 track hoe		Loader	
37 dozer	8	Mini hoe	

LABOR

NAME	OCCUPATION	START TIME:	STOP TIME:	HOURS
Tyler Hollis	Foreman	6:30	12:00	5.5
Jonathan Tenney	Labor	6:30	3:00	8.5
Ethan Howle	Labor	6:30	3:00	8.5
			Total Crew Hours for Today:	22.5
			Total Crew Hours Cumulative:	13839

Details of Hauling/ Weight ticket # and tons

TRUCK	WEIGHT TICKET # / TONS	LOAD COUNT	Origin	DESTINATION
TC truck				
TC truck				
TC truck				
Jerry truck				
Jerry truck				
Teague truck				
Teague truck				
Benchmark truck				

Weather Report

Tyler Hollis

Solutia OU-3 Remediation Action

Construction Daily Work Report

Day # _____

Project Number/Name:	OU-3
Safety Meeting Topic:	
Date:	8/17/16 Wednesday

Activities/ Deliveries

Specific task working and or accomplished today:
Worked at Solutia in area A. Got the dirt pulled off back off the liner 4' from the curb on the west side of area A. Got some of the liner pulled back and started digging out for the type A curb.

EQUIPMENT	HOURS	EQUIPMENT	HOURS
Bobcat		Rock truck	
270 track hoe		61 dozer	
200 track hoe		Loader	
37 dozer		Mini hoe	

LABOR

NAME	OCCUPATION	START TIME:	STOP TIME:	HOURS
Tyler Hollis	Foreman	6:30	5:00	10.5
Jonathan Tenney	Labor	6:30	5:00	10.5
Ethan Howle	Labor	6:30	5:00	10.5
			Total Crew Hours for Today:	31.5
			Total Crew Hours Cumulative:	13870.5

Details of Hauling/ Weight ticket # and tons

TRUCK	WEIGHT TICKET # / TONS	LOAD COUNT	Origin	DESTINATION
TC truck				
TC truck				
TC truck				
Jerry truck				
Jerry truck				
Teague truck				
Teague truck				
Benchmark truck				

Weather Report

Tyler Hollis

Solutia OU-3 Remediation Action

Construction Daily Work Report

Day # _____

Project Number/Name:	OU-3
Safety Meeting Topic:	
Date:	8/18/16 Thursday

Activities/ Deliveries

Specific task working and or accomplished today:
Got all the liner pulled back and all of it dug out for type A curb. Deconed equipment.

EQUIPMENT	HOURS	EQUIPMENT	HOURS
Bobcat		Rock truck	
270 track hoe		61 dozer	
200 track hoe		Loader	
37 dozer		Mini hoe	

LABOR

NAME	OCCUPATION	START TIME:	STOP TIME:	HOURS
Tyler Hollis	Foreman	6:30	4:30	10
Jonathan Tenney	Labor	6:30	4:30	10
Ethan Howle	Labor	6:30	4:30	10
			Total Crew Hours for Today:	30
			Total Crew Hours Cumulative:	13900.5

Details of Hauling/ Weight ticket # and tons

TRUCK	WEIGHT TICKET # / TONS	LOAD COUNT	Origin	DESTINATION
TC truck				
TC truck				
TC truck				
Jerry truck				
Jerry truck				
Teague truck				
Teague truck				
Benchmark truck				

Weather Report

Tyler Hollis

Solutia OU-3 Remediation Action

Construction Daily Work Report

Day # _____

Project Number/Name:	OU-3
Safety Meeting Topic:	
Date:	8/19/16 Friday

Activities/ Deliveries

Specific task working and or accomplished today:
Dugout asphalt in area A and started undercutting 1'. Started raining had to cover the cut with poly.

EQUIPMENT	HOURS	EQUIPMENT	HOURS
Bobcat		Rock truck	
270 track hoe		61 dozer	
200 track hoe		Loader	
37 dozer		Mini hoe	

LABOR

NAME	OCCUPATION	START TIME:	STOP TIME:	HOURS
Tyler Hollis	Foreman	6:30	4:00	9.5
Jonathan Tenney	Labor	6:30	4:00	9.5
Ethan Howle	Labor	6:30	4:00	9.5
			Total Crew Hours for Today:	28.5
			Total Crew Hours Cumulative:	13929

Details of Hauling/ Weight ticket # and tons

TRUCK	WEIGHT TICKET # / TONS	LOAD COUNT	Origin	DESTINATION
TC truck				
TC truck				
TC truck				
Jerry truck				
Jerry truck				
Teague truck				
Teague truck				
Benchmark truck				

Weather Report

Tyler Hollis

Solutia OU-3 Remediation Action

Construction Daily Work Report

Day # _____

Project Number/Name:	OU-3
Safety Meeting Topic:	Proper PPE
Date:	8/22/16 Monday

Activities/ Deliveries

Specific task working and or accomplished today:
Finished digging out the road in the south west corner of area A. Put 6" of DGA back in road.

EQUIPMENT	HOURS	EQUIPMENT	HOURS
Bobcat		Rock truck	
270 track hoe		61 dozer	
200 track hoe		Loader	10
37 dozer		Mini hoe	10

LABOR

NAME	OCCUPATION	START TIME:	STOP TIME:	HOURS
Tyler Hollis	Foreman	6:30	5:00	10.5
Jonathan Tenney	Labor			
Ethan Howle	Labor	6:30	5:00	10.5
			Total Crew Hours for Today:	21
			Total Crew Hours Cumulative:	13950

Details of Hauling/ Weight ticket # and tons

TRUCK	WEIGHT TICKET # / TONS	LOAD COUNT	Origin	DESTINATION
TC truck				
TC truck				
TC truck				
Jerry truck				
Jerry truck				
Teague truck				
Teague truck				
Benchmark truck				

Weather Report

Tyler Hollis

Solutia OU-3 Remediation Action

Construction Daily Work Report

Day # _____

Project Number/Name:	OU-3
Safety Meeting Topic:	Decone
Date:	8/23/16 Tuesday

Activities/ Deliveries

Specific task working and or accomplished today:
Finished fine grading DGA in road. Dialed in rebar into the slab in the south west corner of area A. Started working in area C&D pulled rip rap out of drainage ditch on the south east corner of C&D. Extended rip rap check dam and put a diversion berm down the top of the slope in C&D.

EQUIPMENT	HOURS	EQUIPMENT	HOURS
Bobcat	10	Rock truck	
270 track hoe		61 dozer	
200 track hoe		Loader	
37 dozer		Mini hoe	10

LABOR

NAME	OCCUPATION	START TIME:	STOP TIME:	HOURS
Tyler Hollis	Foreman	6:30	5:00	10.5
Jonathan Tenney	Labor	6:30	5:00	10.5
Ethan Howle	Labor	6:30	5:00	10.5
			Total Crew Hours for Today:	21.5
			Total Crew Hours Cumulative:	13971.5

Details of Hauling/ Weight ticket # and tons

TRUCK	WEIGHT TICKET # / TONS	LOAD COUNT	Origin	DESTINATION
TC truck				
TC truck				
TC truck				
Jerry truck				
Jerry truck				
Teague truck				
Teague truck				
Benchmark truck				

Weather Report

Tyler Hollis

Solutia OU-3 Remediation Action

Construction Daily Work Report

Day # _____

Project Number/Name:	OU-3
Safety Meeting Topic:	Hydration
Date:	8/24/16 Wednesday

Activities/ Deliveries

Specific task working and or accomplished today:
Finished rip rap flume in area C&D. Put in 3 more rip rap check dams.

EQUIPMENT	HOURS	EQUIPMENT	HOURS
Bobcat	10	Rock truck	
270 track hoe		61 dozer	
200 track hoe		Loader	
37 dozer		Mini hoe	10

LABOR

NAME	OCCUPATION	START TIME:	STOP TIME:	HOURS
Tyler Hollis	Foreman	6:30	4:30	10
Jonathan Tenney	Labor	6:30	4:30	10
Ethan Howle	Labor	6:30	4:30	10
			Total Crew Hours for Today:	30
			Total Crew Hours Cumulative:	14001.5

Details of Hauling/ Weight ticket # and tons

TRUCK	WEIGHT TICKET # / TONS	LOAD COUNT	Origin	DESTINATION
TC truck				
TC truck				
TC truck				
Jerry truck				
Jerry truck				
Teague truck				
Teague truck				
Benchmark truck				

Weather Report

Tyler Hollis

Solutia OU-3 Remediation Action

Construction Daily Work Report

Day # _____

Project Number/Name:	OU-3
Safety Meeting Topic:	Hydration
Date:	8/25/16 Thursday

Activities/ Deliveries

Specific task working and or accomplished today:
Cut bad spots out of asphalt road along the west side of area A. Saw cut the new concrete in area A. Put more seed and fertilizer out in area A.

EQUIPMENT	HOURS	EQUIPMENT	HOURS
Bobcat	10	Rock truck	
270 track hoe		61 dozer	
200 track hoe		Loader	
37 dozer		Mini hoe	

LABOR

NAME	OCCUPATION	START TIME:	STOP TIME:	HOURS
Tyler Hollis	Foreman	11:00	4:30	5.5
Jonathan Tenney	Labor	11:00	4:30	5.5
Ethan Howle	Labor	11:00	4:30	5.5
			Total Crew Hours for Today:	16.5
			Total Crew Hours Cumulative:	14018

Details of Hauling/ Weight ticket # and tons

TRUCK	WEIGHT TICKET # / TONS	LOAD COUNT	Origin	DESTINATION
TC truck				
TC truck				
TC truck				
Jerry truck				
Jerry truck				
Teague truck				
Teague truck				
Benchmark truck				

Weather Report

Tyler Hollis

Solutia OU-3 Remediation Action

Construction Daily Work Report

Day # _____

Project Number/Name:	OU-3
Safety Meeting Topic:	Hydration
Date:	8/26/16 Friday

Activities/ Deliveries

Specific task working and or accomplished today:
Went got the broom and forks for the bobcat worked on the smooth drum roller and got it running moved it to area A. Dug out 3 bad spots in the asphalt road along the side of area A.

EQUIPMENT	HOURS	EQUIPMENT	HOURS
Bobcat	10	Rock truck	
270 track hoe		61 dozer	
200 track hoe		Loader	
37 dozer		Mini hoe	10

LABOR

NAME	OCCUPATION	START TIME:	STOP TIME:	HOURS
Tyler Hollis	Foreman	6:30	4:30	10
Jonathan Tenney	Labor	6:30	4:30	10
Ethan Howle	Labor	6:30	4:30	10
			Total Crew Hours for Today:	30
			Total Crew Hours Cumulative:	14048

Details of Hauling/ Weight ticket # and tons

TRUCK	WEIGHT TICKET # / TONS	LOAD COUNT	Origin	DESTINATION
TC truck				
TC truck				
TC truck				
Jerry truck				
Jerry truck				
Teague truck				
Teague truck				
Benchmark truck				

Weather Report

Tyler Hollis

Solutia OU-3 Remediation Action

Construction Daily Work Report

Day # _____

Project Number/Name:	OU-3
Safety Meeting Topic:	QCI refresher
Date:	8/29/16 Monday

Activities/ Deliveries

Specific task working and or accomplished today:
Put in 4 asphalt patches in the road along the west side of area A. Cut liner and fabric back from part of the type A curb and back filled part of it.

EQUIPMENT	HOURS	EQUIPMENT	HOURS
Bobcat	10	Rock truck	
270 track hoe		61 dozer	
200 track hoe		Loader	
37 dozer		Mini hoe	10

LABOR

NAME	OCCUPATION	START TIME:	STOP TIME:	HOURS
Tyler Hollis	Foreman	6:30	5:30	10.5
Jonathan Tenney	Labor	6:30	5:30	10.5
Ethan Howle	Labor	6:30	5:30	10.5
			Total Crew Hours for Today:	31.5
			Total Crew Hours Cumulative:	14079.5

Details of Hauling/ Weight ticket # and tons

TRUCK	WEIGHT TICKET # / TONS	LOAD COUNT	Origin	DESTINATION
TC truck				
TC truck				
TC truck				
Jerry truck				
Jerry truck				
Teague truck				
Teague truck				
Benchmark truck				

Weather Report

Tyler Hollis

Solutia OU-3 Remediation Action

Construction Daily Work Report

Day # _____

Project Number/Name:	OU-3
Safety Meeting Topic:	Fire safety
Date:	8/31/16 Wednesday

Activities/ Deliveries

Specific task working and or accomplished today:
Finished topsoil behind part of the type A curb on the south west corner of area A. Saw cut contrete joints in type A curb in area A. Loaded up rolls of geo composit out of area A.

EQUIPMENT	HOURS	EQUIPMENT	HOURS
Bobcat	5	Rock truck	
Welder		61 dozer	
200 track hoe		Loader	
37 dozer		Mini hoe	5

LABOR

NAME	OCCUPATION	START TIME:	STOP TIME:	HOURS
Tyler Hollis	Foreman	11:00	4:30	5.5
Jonathan Tenney	Labor	11:00	4:30	5.5
Ethan Howle	Labor	11:00	2:30	3.5
			Total Crew Hours for Today:	14.5
			Total Crew Hours Cumulative:	14094

Details of Hauling/ Weight ticket # and tons

TRUCK	WEIGHT TICKET # / TONS	LOAD COUNT	Origin	DESTINATION
TC truck				
TC truck				
TC truck				
Jerry truck				
Jerry truck				
Teague truck				
Teague truck				
Benchmark truck				

Weather Report

Tyler Hollis

Solutia OU-3 Remediation Action

Construction Daily Work Report

Day # _____

Project Number/Name:	OU-3
Safety Meeting Topic:	Heat stress
Date:	9/1/16 Thursday

Activities/ Deliveries

Specific task working and or accomplished today:
Finished back filling behind the rest of the type A curb in area A. Started filling in the sediment pond at the borrow pit.

EQUIPMENT	HOURS	EQUIPMENT	HOURS
Bobcat	5	Rock truck	
Welder		61 dozer	
200 track hoe	5	Loader	
31 dozer	5	Mini hoe	5

LABOR

NAME	OCCUPATION	START TIME:	STOP TIME:	HOURS
Tyler Hollis	Foreman	6:30	5:00	10.5
Jonathan Tenney	Labor	6:30	5:00	10.5
Ethan Howle	Labor	6:30	5:00	10.5
			Total Crew Hours for Today:	31.5
			Total Crew Hours Cumulative:	14125.5

Details of Hauling/ Weight ticket # and tons

TRUCK	WEIGHT TICKET # / TONS	LOAD COUNT	Origin	DESTINATION
TC truck				
TC truck				
TC truck				
Jerry truck				
Jerry truck				
Teague truck				
Teague truck				
Benchmark truck				

Weather Report

Tyler Hollis

Solutia OU-3 Remediation Action

Construction Daily Work Report

Day # _____

Project Number/Name:	OU-3
Safety Meeting Topic:	Heat stress
Date:	9/2/16 Friday

Activities/ Deliveries

Specific task working and or accomplished today:
Finished topsoil at borrow pit where sediment pond was. Dressed up and walked in. Grass works came and shot it with seed and hay.

EQUIPMENT	HOURS	EQUIPMENT	HOURS
Bobcat		Rock truck	
Welder		61 dozer	
200 track hoe	5	Loader	
31 dozer	5	Mini hoe	5

LABOR

NAME	OCCUPATION	START TIME:	STOP TIME:	HOURS
Tyler Hollis	Foreman	6:30	3:00	8.5
Jonathan Tenney	Labor	6:30	3:00	8.5
Ethan Howle	Labor	6:30	2:30	8
			Total Crew Hours for Today:	25
			Total Crew Hours Cumulative:	14149.5

Details of Hauling/ Weight ticket # and tons

TRUCK	WEIGHT TICKET # / TONS	LOAD COUNT	Origin	DESTINATION
TC truck				
TC truck				
TC truck				
Jerry truck				
Jerry truck				
Teague truck				
Teague truck				
Benchmark truck				

Weather Report

Tyler Hollis

Solutia OU-3 Remediation Action

Construction Daily Work Report

Day # _____

Project Number/Name:	GW
Safety Meeting Topic:	Heat stress
Date:	9/6/16 Tuesday

Activities/ Deliveries

Specific task working and or accomplished today:
Pulled a vault out from the east side of the employee parking lot and took it to the north side where the 3" poly ties into the manhole. Trenches in 400' of 3" poly and back filled with clean material. Filled up one container.

EQUIPMENT	HOURS	EQUIPMENT	HOURS
Bobcat	5	Rock truck	
Trencher	3	61 dozer	
200 track hoe		Loader	
31 dozer		Mini hoe	3

LABOR

NAME	OCCUPATION	START TIME:	STOP TIME:	HOURS
Tyler Hollis	Foreman	6:30	1:00	6.5
Jonathan Tenney	Labor	6:30	1:00	6.5
Ethan Howle	Labor	6:30	1:00	6.5
			Total Crew Hours for Today:	19.5
			Total Crew Hours Cumulative:	384

Details of Hauling/ Weight ticket # and tons

TRUCK	WEIGHT TICKET # / TONS	LOAD COUNT	Origin	DESTINATION
TC truck				
TC truck				
TC truck				
Jerry truck				
Jerry truck				
Teague truck				
Teague truck				
Benchmark truck				

Weather Report

Tyler Hollis

Solutia OU-3 Remediation Action

Construction Daily Work Report

Day # _____

Project Number/Name:	OU-3
Safety Meeting Topic:	Heat stress
Date:	9/6/16 Tuesday

Activities/ Deliveries

Specific task working and or accomplished today:
Put out 4.5 pallets of sod in area A against the new curb.

EQUIPMENT	HOURS	EQUIPMENT	HOURS
Bobcat	4	Rock truck	
Trencher		61 dozer	
200 track hoe		Loader	
31 dozer		Mini hoe	

LABOR

NAME	OCCUPATION	START TIME:	STOP TIME:	HOURS
Tyler Hollis	Foreman	1:00	5:00	4
Jonathan Tenney	Labor	1:00	5:00	4
Ethan Howle	Labor	1:00	5:00	4
			Total Crew Hours for Today:	12
			Total Crew Hours Cumulative:	14161.5

Details of Hauling/ Weight ticket # and tons

TRUCK	WEIGHT TICKET # / TONS	LOAD COUNT	Origin	DESTINATION
TC truck				
TC truck				
TC truck				
Jerry truck				
Jerry truck				
Teague truck				
Teague truck				
Benchmark truck				

Weather Report

Tyler Hollis

Solutia OU-3 Remediation Action

Construction Daily Work Report

Day # _____

Project Number/Name:	OU-3
Safety Meeting Topic:	
Date:	9/7/16 Wednesday

Activities/ Deliveries

Specific task working and or accomplished today:
Back filled behind curb beside the western vault and put out a half a pallet of sod. Put out seed, fertilizer, and hay on bare spots behind the sod.

EQUIPMENT	HOURS	EQUIPMENT	HOURS
Bobcat	10	Rock truck	
Trencher		61 dozer	
200 track hoe		Loader	
31 dozer		Mini hoe	

LABOR

NAME	OCCUPATION	START TIME:	STOP TIME:	HOURS
Tyler Hollis	Foreman	6:30	5:00	10.5
Jonathan Tenney	Labor	6:30	5:00	10.5
Ethan Howle	Labor	6:30	5:00	10.5
			Total Crew Hours for Today:	31.5
			Total Crew Hours Cumulative:	14193

Details of Hauling/ Weight ticket # and tons

TRUCK	WEIGHT TICKET # / TONS	LOAD COUNT	Origin	DESTINATION
TC truck				
TC truck				
TC truck				
Jerry truck				
Jerry truck				
Teague truck				
Teague truck				
Benchmark truck				

Weather Report

Tyler Hollis

Solutia OU-3 Remediation Action

Construction Daily Work Report

Day # _____

Project Number/Name:	OU-3
Safety Meeting Topic:	
Date:	10/6/16 Thursday

Activities/ Deliveries

Specific task working and or accomplished today:
Worked a solutia. Removed all silt fence on the north side of the PCB Cell. Sealed the concrete joints in area A.

EQUIPMENT	HOURS	EQUIPMENT	HOURS
Bobcat		Rock truck	
Trencher		61 dozer	
200 track hoe		Loader	
31 dozer		Mini hoe	

LABOR

NAME	OCCUPATION	START TIME:	STOP TIME:	HOURS
Tyler Hollis	Foreman	6:30	5:00	
Jonathan Tenney	Labor	6:30	3:00	
Ethan Howle	Labor	6:30	5:00	
			Total Crew Hours for Today:	
			Total Crew Hours Cumulative:	

Details of Hauling/ Weight ticket # and tons

TRUCK	WEIGHT TICKET # / TONS	LOAD COUNT	Origin	DESTINATION
TC truck				
TC truck				
TC truck				
Jerry truck				
Jerry truck				
Teague truck				
Teague truck				
Benchmark truck				

Weather Report

Tyler Hollis

Solutia OU-3 Remediation Action

Construction Daily Work Report

Day # _____

Project Number/Name:	Solutia Groundwater
Safety Meeting Topic:	Decontamination Procedures
Date:	Monday, December 5, 2016

Activities/ Deliveries

Specific task working and or accomplished today:

Built pad for frack tank

50.74 Tons of DGB. 120' x 17.5' of material. Pad = 60' x 17.5'

EQUIPMENT	HOURS	EQUIPMENT	HOURS
D-31 Dozer	2		

LABOR

NAME	OCCUPATION	START TIME:	STOP TIME:	HOURS
Matt Owen	Foreman/ Operator	6:30	12:30p	6
			Total Crew Hours for Today:	6
			Total Crew Hours Cumulative:	

Details of Hauling/ Weight ticket # and tons

TRUCK	WEIGHT TICKET # / TONS	LOAD COUNT	ORIGIN	DESTINATION

Weather Report

Heavy Rain

Solutia OU-3 Remediation Action

Construction Daily Work Report

Day # _____

Project Number/Name:	Solutia Groundwater
Safety Meeting Topic:	Exposure Monitoring
Date:	Thursday, December 8, 2016

Activities/ Deliveries

Specific task working and or accomplished today:

Gathered all needed materials on site. Began piping up in well house.

EQUIPMENT	HOURS	EQUIPMENT	HOURS
F250 Pickup	9.5		

LABOR

NAME	OCCUPATION	START TIME:	STOP TIME:	HOURS
Sonny Patat	Foreman	6:30	4:00pm	9.5
James Ford	Laborer	6:30	4:00pm	9.5
Jonathan Tenney	Laborer	6:30	4:00pm	9.5
			Total Crew Hours for Today:	28.5
			Total Crew Hours Cumulative:	

Details of Hauling/ Weight ticket # and tons

TRUCK	WEIGHT TICKET # / TONS	LOAD COUNT	ORIGIN	DESTINATION

Weather Report

Solutia OU-3 Remediation Action

Construction Daily Work Report

Day # _____

Project Number/Name:	Solutia Groundwater
Safety Meeting Topic:	Decontamination Procedures
Date:	Friday, December 9, 2016

Activities/ Deliveries

Specific task working and or accomplished today:

Cut into lines at Administration Building. Installed valves. Replaced series of fittings at 14-A

EQUIPMENT	HOURS	EQUIPMENT	HOURS
F250 Pickup	9.5		

LABOR

NAME	OCCUPATION	START TIME:	STOP TIME:	HOURS
Sonny Patat	Foreman	6:30	4:00pm	9.5
James Ford	Laborer	6:30	4:00pm	9.5
Jonathan Tenney	Laborer	8:30	4:00pm	7.5
			Total Crew Hours for Today:	26.5
			Total Crew Hours Cumulative:	

Details of Hauling/ Weight ticket # and tons

TRUCK	WEIGHT TICKET # / TONS	LOAD COUNT	ORIGIN	DESTINATION

Weather Report

Solutia OU-3 Remediation Action

Construction Daily Work Report

Day # _____

Project Number/Name:	Solutia Groundwater
Safety Meeting Topic:	Fire Prevention
Date:	Monday, December 12, 2016

Activities/ Deliveries

Specific task working and or accomplished today:

Line Testing

EQUIPMENT	HOURS	EQUIPMENT	HOURS
F250 Pickup	9.5		

LABOR

NAME	OCCUPATION	START TIME:	STOP TIME:	HOURS
Sonny Patat	Foreman	6:30	3:30p	9
James Ford	Laborer	6:30	3:30p	9
Jonathan Tenney	Laborer	6:30	3:30p	9
			Total Crew Hours for Today:	27
			Total Crew Hours Cumulative:	

Details of Hauling/ Weight ticket # and tons

TRUCK	WEIGHT TICKET # / TONS	LOAD COUNT	ORIGIN	DESTINATION

Weather Report

Solutia OU-3 Remediation Action

Construction Daily Work Report

Day # _____

Project Number/Name:	Solutia Groundwater
Safety Meeting Topic:	Correct PPE for the Job
Date:	Tuesday, December 13, 2016

Activities/ Deliveries

Specific task working and or accomplished today:

Line Testing

EQUIPMENT	HOURS	EQUIPMENT	HOURS
F250 Pickup	10		

LABOR

NAME	OCCUPATION	START TIME:	STOP TIME:	HOURS
Sonny Patat	Foreman	6:30	4:30p	10
James Ford	Laborer	6:30	4:30p	10
Jonathan Tenney	Laborer			0
			Total Crew Hours for Today:	20
			Total Crew Hours Cumulative:	

Details of Hauling/ Weight ticket # and tons

TRUCK	WEIGHT TICKET # / TONS	LOAD COUNT	ORIGIN	DESTINATION

Weather Report

Solutia OU-3 Remediation Action

Construction Daily Work Report

Day # _____

Project Number/Name:	Solutia Groundwater
Safety Meeting Topic:	Spill Cleanup Procedures
Date:	Wednesday, December 14, 2016

Activities/ Deliveries

Specific task working and or accomplished today:

Line Testing. Hauling dirt for Electrician to set Power Pole.

EQUIPMENT	HOURS	EQUIPMENT	HOURS
F250 Pickup	9.5		

LABOR

NAME	OCCUPATION	START TIME:	STOP TIME:	HOURS
Sonny Patat	Foreman	6:30	4:00p	9.5
James Ford	Laborer	0:00	0	0
Jonathan Tenney	Laborer	6:30	4:00p	9.5
			Total Crew Hours for Today:	19
			Total Crew Hours Cumulative:	

Details of Hauling/ Weight ticket # and tons

TRUCK	WEIGHT TICKET # / TONS	LOAD COUNT	ORIGIN	DESTINATION

Weather Report

Solutia OU-3 Remediation Action

Construction Daily Work Report

Day # _____

Project Number/Name:	Solutia Groundwater
Safety Meeting Topic:	Understanding Chemical Hazards
Date:	Thursday, December 15, 2016

Activities/ Deliveries

Specific task working and or accomplished today:

Line Testing. Hauling dirt for Electrician to set Power Pole.

EQUIPMENT	HOURS	EQUIPMENT	HOURS
F250 Pickup	9.5		

LABOR

NAME	OCCUPATION	START TIME:	STOP TIME:	HOURS
Sonny Patat	Foreman	6:30	4:00p	9.5
James Ford	Laborer	0:00	0	0
Jonathan Tenney	Laborer	6:30	4:00p	9.5
			Total Crew Hours for Today:	19
			Total Crew Hours Cumulative:	

Details of Hauling/ Weight ticket # and tons

TRUCK	WEIGHT TICKET # / TONS	LOAD COUNT	ORIGIN	DESTINATION

Weather Report

Solutia OU-3 Remediation Action

Construction Daily Work Report

Day # _____

Project Number/Name:	Solutia Groundwater
Safety Meeting Topic:	Freezing Temperatures
Date:	Monday, December 19, 2016

Activities/ Deliveries

Specific task working and or accomplished today:

Jonathan Tenney and Statlin Ponder Installed Pipe at CTS 2, Dustin Parris took down silt fence along Clydesdale, James Tilley backdrug Stone at Area C&D until 2 pm. Then James assisted Dustin with Silt Fence removal. Sonny and James Traveled back from Arkansas. Lowboy brought in Skid steer and Mini Ex

EQUIPMENT	HOURS	EQUIPMENT	HOURS
F250 Pickup	10		
Skidsteer	10		
Mini Ex	10		

LABOR

NAME	OCCUPATION	START TIME:	STOP TIME:	HOURS
Sonny Patat	Foreman	Not on Site		
James Ford	Laborer	Not on Site		
Jonathan Tenney	Laborer	6:30	4:30	10
Statlin Ponder	Laborer	6:30	4:30	10
Dustin Parris	Laborer	6:30	4:30	10
James Tilley	Operator	6:30	4:30	10
			Total Crew Hours for Today:	40
			Total Crew Hours Cumulative:	

Details of Hauling/ Weight ticket # and tons

TRUCK	WEIGHT TICKET # / TONS	LOAD COUNT	ORIGIN	DESTINATION

Weather Report

Cloudy and Cold

Solutia OU-3 Remediation Action

Construction Daily Work Report

Day # _____

Project Number/Name:	Solutia Groundwater
Safety Meeting Topic:	Using hand tools
Date:	Tuesday, December 20, 2016

Activities/ Deliveries

Specific task working and or accomplished today:

Dug and found discharge line from CTS 1, plumbed out and insulated the lines for FRAC Tank at CTS 1. At 2 Moved to CTS 2 and continued Plumbing out the Carbon Vessels. Dustin Parris removed silt fence along Clydesdale Ave and James Tilley Backdrug the rest of the stone in C&D.

EQUIPMENT	HOURS	EQUIPMENT	HOURS
F250 Pickup	9.5		
Skidsteer	9.5		
Mini Ex	9.5		

LABOR

NAME	OCCUPATION	START TIME:	STOP TIME:	HOURS
Sonny Patat	Foreman	6:30	4:00	9.5
James Ford	Laborer	6:30	4:00	9.5
Jonathan Tenney	Laborer	6:30	4:00	9.5
Statlin Ponder	Laborer	6:30	4:00	9.5
Dustin Parris	Laborer	6:30	4:00	9.5
James Tilley	Operator	6:30	4:00	9.5
			Total Crew Hours for Today:	57
			Total Crew Hours Cumulative:	

Details of Hauling/ Weight ticket # and tons

TRUCK	WEIGHT TICKET # / TONS	LOAD COUNT	ORIGIN	DESTINATION

Weather Report

Cloudy and Cold

Solutia OU-3 Remediation Action

Construction Daily Work Report

Day # _____

Project Number/Name:	Solutia Groundwater
Safety Meeting Topic:	Proper PPR
Date:	Wednesday, December 21, 2016

Activities/ Deliveries

Specific task working and or accomplished today:

Piped up Carbon tanks. Removed silt fence.

EQUIPMENT	HOURS	EQUIPMENT	HOURS
F250 Pickup	9.5		

LABOR

NAME	OCCUPATION	START TIME:	STOP TIME:	HOURS
Sonny Patat	Foreman	6:30	4:00	9.5
James Ford	Laborer	0:00	0:00	0
Jonathan Tenney	Laborer	6:30	4:00	9.5
			Total Crew Hours for Today:	19
			Total Crew Hours Cumulative:	

Details of Hauling/ Weight ticket # and tons

TRUCK	WEIGHT TICKET # / TONS	LOAD COUNT	ORIGIN	DESTINATION

Weather Report

Cloudy and Cold

Solutia OU-3 Remediation Action

Construction Daily Work Report

Day # _____

Project Number/Name:	Solutia Groundwater
Safety Meeting Topic:	Self Decon When You Leave the Jobsite
Date:	Thursday, December 22, 2016

Activities/ Deliveries

Specific task working and or accomplished today:

Piped up well house. Moved Rip-Rap off fence. Secured fence to administration building

EQUIPMENT	HOURS	EQUIPMENT	HOURS
F250 Pickup	8.5		

LABOR

NAME	OCCUPATION	START TIME:	STOP TIME:	HOURS
Sonny Patat	Foreman	6:30	3:00	8.5
James Ford	Laborer	6:30	3:00	8.5
Jonathan Tenney	Laborer	8:00	3:00	7
			Total Crew Hours for Today:	24
			Total Crew Hours Cumulative:	

Details of Hauling/ Weight ticket # and tons

TRUCK	WEIGHT TICKET # / TONS	LOAD COUNT	ORIGIN	DESTINATION

Weather Report

Cloudy and Cold

APPENDIX V2

Golder Associates Daily Reports

FIELD MONITORING REPORT

Project No.:	1302962.CQA	**Project Title:**	OU-3 RA Cover Systems
Location:	Anniston, AL		
Owner:	Solutia, Inc.		
Contractor:	Taylor Corp.		

Date: Wednesday, July 1, 2015

1.0 SITE CONDITIONS

Weather Condition:	Partly Cloudy
Temperature:	80-85
Precipitation:	None

2.0 HEALTH AND SAFETY

Issues:	Automated speed limit sign will be placed on opposite ends of Highway 202 to control speed on oncoming traffic before construction traffic. Submittal will be sent by Taylor Corp. for review.

3.0 GOLDER PERSONNEL ON SITE

Name	Time on Site
Patrick Callahan	10:00 to 16:00

4.0 SUMMARY OF ACTIVITIES

None

5.0 DISCUSSIONS / MEETINGS

Personnel Involved:	Solutia, Taylor, and EPA oversite
Location:	Solutia
Topics Covered:	Weekly Construction Meeting

6.0 CQA TESTING PERFORMED ON-SITE

Location:	
Test:	

Golder Associates Inc.
3730 Chamblee Tucker Road
Atlanta, GA 30341 USA
Tel: (770) 496-1893 Fax: (770) 934-9476 www.golder.com

Golder Associates: Operations in Africa, Asia, Australasia, Europe, North America and South America

Golder, Golder Associates and the GA globe design are trademarks of Golder Associates Corporation

7.0 COMMENTS / ISSUES / OTHER

None

8.0 EQUIPMENT ONSITE

None

9.0 PHOTOGRAPHS

None

FIELD MONITORING REPORT

Project No.:	1302962.CQA	**Project Title:**	OU-3 RA Cover Systems
Location:	Anniston, AL		
Owner:	Solutia, Inc.		
Contractor:	Taylor Corp.		

Date: Wednesday, July 8, 2015

1.0 SITE CONDITIONS

Weather Condition:	Mostly Sunny
Temperature:	85-92
Precipitation:	None

2.0 HEALTH AND SAFETY

Issues:	Hard copy of Final HSCP given to Taylor. Security trailer scheduled for installation on Friday 7/10/2015. Guard will be made familiar with Plant security and TC policies and will have extra Vehicle Passes (to be turned in at the end of the day)

3.0 GOLDER PERSONNEL ON SITE

Name	Time on Site	
Patrick Callahan	9:10	16:00
Steve Moeller	10:30	12:30

4.0 SUMMARY OF ACTIVITIES

Location: PCB Cells

Clearing small trees/stumps along eastern boundary of PCB Cells.

5.0 DISCUSSIONS / MEETINGS

Personnel Involved:	Solutia, Taylor and EPA oversight
Location:	Solutia
Topics Covered:	Weekly Construction Meeting 10:30 am – 12:00 pm

Golder Associates Inc.
3730 Chamblee Tucker Road
Atlanta, GA 30341 USA
Tel: (770) 496-1893 Fax: (770) 934-9476 www.golder.com

Golder Associates: Operations in Africa, Asia, Australasia, Europe, North America and South America

Golder, Golder Associates and the GA globe design are trademarks of Golder Associates Corporation

6.0 CQA TESTING PERFORMED ON-SITE

Location:	
Test:	

7.0 COMMENTS / ISSUES / OTHER

None

8.0 EQUIPMENT ONSITE

Bush-hog

9.0 PHOTOGRAPHS

None

FIELD MONITORING REPORT

Project No.:	1302962.CQA	**Project Title:**	OU-3 RA Cover Systems
Location:	Anniston, AL		
Owner:	Solutia, Inc.		
Contractor:	Taylor Corp.		

Date: Wednesday August 5, 2015

1.0 SITE CONDITIONS

Weather Condition:	Partly Cloudy
Temperature:	80-85 °F
Precipitation:	None

2.0 HEALTH AND SAFETY

Issues:	None

3.0 GOLDER PERSONNEL ON SITE

Name	Time on Site

4.0 SUMMARY OF ACTIVITIES

Location:

0615 Golder arrived onsite.
0645 Golder conducted H&S meeting with Taylor employees that would be working on excavation. Golder received Call from IWI to pick up roll offs to be moved to the locations where IW26-29 will be installed. There was a partial delay in moving the roll offs because the truck to move the roll offs got stuck at entrance for approximately 1 hr. Once roll offs were placed at well locations excavation of IW29 commenced then IW28. The excavated hole size was a little bigger than the anticipated size of 4x4 because of the size of equipment used to perform the work (KOMATSU PC 200) actual size of excavated holes 4x5. Golder estimates the roll off contains b/w 7-8yds of material. Upon completion of the excavation of IW28/29 excavator bucket was deconed using dry method of sweeping bucket/shoveling of bigger pieces of soil that was stuck on the bucket. Clean soil was then placed in the two holes and compacted.

10:30 Unloaded excavator at IW 26-27 area and began excavation of IW26 and 27. As stated above hole size was bigger than anticipated because of equipment used. Once hole were excavated bucket was deconed and clean soil was placed back in the holes and compacted

1030 Unloaded excavator at IW 26-27 area and began excavation of IW26 and 27. As stated above hole size was bigger than anticipated because of equipment used. Once hole were excavated bucket was deconed and clean soil was placed back in the holes and compacted.

Golder Associates Inc.
3730 Chamblee Tucker Road
Atlanta, GA 30341 USA
Tel: (770) 496-1893 Fax: (770) 934-9476 www.golder.com

Golder Associates: Operations in Africa, Asia, Australasia, Europe, North America and South America

Golder, Golder Associates and the GA globe design are trademarks of Golder Associates Corporation

Contractor continued to work on clearing trees and decon pad install at the PCB Cells exit location

5.0 DISCUSSIONS / MEETINGS

Personnel Involved:	
Location:	
Topics Covered:	

6.0 CQA TESTING PERFORMED ON-SITE

Location:	
Test:	

7.0 COMMENTS / ISSUES / OTHER

None

8.0 EQUIPMENT ONSITE

None

9.0 PHOTOGRAPHS

None

FIELD MONITORING REPORT

Project No.:	1302962.CQA	**Project Title:**	OU-3 RA Cover Systems
Location:	Anniston, AL		
Owner:	Solutia, Inc.		
Contractor:	Taylor Corp.		

Date: Friday, August 7, 2015

1.0 SITE CONDITIONS

Weather Condition:	
Temperature:	
Precipitation:	

2.0 HEALTH AND SAFETY

Issues:	

3.0 GOLDER PERSONNEL ON SITE

Name	Time on Site

4.0 SUMMARY OF ACTIVITIES

06:20 Arrive onsite.

Morning: Went to main office to get excavation permits signed for the drilling on 8/10/15 for the areas IW 26-27. Labeled the roll off containers at areas IW26-29 with PCB stickers. Continued to setup trailer. Taylor finishing up decon pad at the exit of the PCB cells.

Afternoon: Golder left site to go pick up the printer that was ordered at Office Max. Spent most of the afternoon trying to get the printer connected to the computer and eventually had to go back to Office Max to have an employee there set it up.

Contractor began building decon pad near office trailer.

1500 contractor left site.

Golder Associates Inc.
3730 Chamblee Tucker Road
Atlanta, GA 30341 USA
Tel: (770) 496-1893 Fax: (770) 934-9476 www.golder.com

Golder Associates: Operations in Africa, Asia, Australasia, Europe, North America and South America

Golder, Golder Associates and the GA globe design are trademarks of Golder Associates Corporation

5.0 DISCUSSIONS / MEETINGS

Personnel Involved:	NA
Location:	NA
Topics Covered:	NA

6.0 CQA TESTING PERFORMED ON-SITE

Location:	NA
Test:	NA

7.0 COMMENTS / ISSUES / OTHER

None

8.0 EQUIPMENT ONSITE

None

9.0 PHOTOGRAPHS

None

FIELD MONITORING REPORT

Project No.:	1302962.CQA	**Project Title:**	OU-3 RA Cover Systems
Location:	Anniston, AL		
Owner:	Solutia, Inc.		
Contractor:	Taylor Corp.		

Date: Monday, August 10, 2015

1.0 SITE CONDITIONS

Weather Condition:	
Temperature:	
Precipitation:	

2.0 HEALTH AND SAFETY

Issues:	

3.0 GOLDER PERSONNEL ON SITE

Name	Time on Site

4.0 SUMMARY OF ACTIVITIES

0615 Arrive onsite H&S meeting with Taylor at 0630
0730 Truck with drilling supplies arrived onsite to be unloaded for the IW 26-29 well install and well raising

0800 Rich Poff onsite waiting on drillers.

Taylor continuing to build decon pad office trailer location also moving trees in the borrow source area so that they are easier to get at for chipping.

Golder printed out liner forms to be used for the liner cap PCB area

Cascade arrived onsite mid- morning and took the H&S video for the plant

Afternoon

Taylor sprayed herbicide in the PCB area where there were a few spots that were getting green again. Not big areas located on the east side of the site.
Cascade removed bollards around wells OW-6D and OW10. also raised well T-6 and removed the metal casing around OWR11. Rich does not want to remove the concrete slab at OWR11 for fear of damaging the well. I told him I would just put the base layer of soil in thicker in that area.

Golder Associates Inc.
3730 Chamblee Tucker Road
Atlanta, GA 30341 USA
Tel: (770) 496-1893 Fax: (770) 934-9476 www.golder.com

Golder Associates: Operations in Africa, Asia, Australasia, Europe, North America and South America

Golder, Golder Associates and the GA globe design are trademarks of Golder Associates Corporation

5.0 DISCUSSIONS / MEETINGS

Personnel Involved:	NA
Location:	NA
Topics Covered:	NA

6.0 CQA TESTING PERFORMED ON-SITE

Location:	NA
Test:	NA

7.0 COMMENTS / ISSUES / OTHER

None

8.0 EQUIPMENT ONSITE

None

9.0 PHOTOGRAPHS

None

FIELD MONITORING REPORT

Project No.:	1302962.CQA	**Project Title:**	OU-3 RA Cover Systems
Location:	Anniston, AL		
Owner:	Solutia, Inc.		
Contractor:	Taylor Corp.		

Date: Tuesday, August 11, 2015

1.0 SITE CONDITIONS

Weather Condition:	
Temperature:	
Precipitation:	

2.0 HEALTH AND SAFETY

Issues:	

3.0 GOLDER PERSONNEL ON SITE

Name	Time on Site

4.0 SUMMARY OF ACTIVITIES

0615 arrive onsite H&S meeting with Taylor. Contractor has 11 men onsite 4 of which are working for Eastman today repairing a fire line on site

Morning Golder (Rich Poff) and the Cascade drilling company finished cutting off the metal stickup to OWR11they did not remove the concrete pad for fear of damaging the well. Driller/Golder then moved to OWR6D to abandon well. Golder did not remove the casing during abandonment.

Taylor for the whole day continued to move brush and surveyed area for the ditch that will be installed along the south side of the borrow source

Golder collected sample of DGA from the Vulcan pit. First sample tested failed gradation. Collected sample from 3 different locations from the small pile that was at the pit. Contractor was going to track mini excavator across HWY 202. Josh saw what the contractor was about

Golder, Golder Associates and the GA globe design are trademarks of Golder Associates Corporation

to do and stopped them. Don Williams then immediately called all workers to the trailer to discuss

Drilling in the afternoon consisted of continuing to abandon OWR6D

5.0 DISCUSSIONS / MEETINGS

Personnel Involved:	NA
Location:	NA
Topics Covered:	NA

6.0 CQA TESTING PERFORMED ON-SITE

Location:	NA
Test:	NA

7.0 COMMENTS / ISSUES / OTHER

None

8.0 EQUIPMENT ONSITE

None

9.0 PHOTOGRAPHS

None

FIELD MONITORING REPORT

Project No.:	1302962.CQA	**Project Title:**	OU-3 RA Cover Systems
Location:	Anniston, AL		
Owner:	Solutia, Inc.		
Contractor:	Taylor Corp.		

Date: Monday August 17, 2015

1.0 SITE CONDITIONS

Weather Condition:	Mostly cloudy with light rain; thunderstorms in the afternoon
Temperature:	73 - 87
Precipitation:	0.17 inches

2.0 HEALTH AND SAFETY

Issues:	.New Golder personnel on site (P. Callahan); review of HS policies and procedures

3.0 GOLDER PERSONNEL ON SITE

Name	Time on Site
Patrick Callahan	7:40 To 16:15

4.0 SUMMARY OF ACTIVITIES

Location: Autoclave

Plant is currently in "shut-down" and Taylor's crew is beginning excavation in the south side of the autoclave area. Roll-offs, poly sheeting, and "exclusion zone" are in place as part of decontamination procedures.
Material is being excavated with the mini-excavators and by hand, placed into skid steers, and moved into the front-end loader.
Some areas around south stair landings are being hammered and chiseled out.
13:00 Lance Taylor (Taylor Corp) indicated that the mini-excavator contacted a 12-inch inactive terracotta pipe in the vicinity of the fire water shed. Tom Collins will be contacted to verify line is inactive.
15:25 work stopped due to lightening in the area. Excavated material stockpile is covered with poly sheeting.
Excavation will continue on night shift.

Golder Associates Inc.
3730 Chamblee Tucker Road
Atlanta, GA 30341 USA
Tel: (770) 496-1893 Fax: (770) 934-9476 www.golder.com

Golder Associates: Operations in Africa, Asia, Australasia, Europe, North America and South America

Golder, Golder Associates and the GA globe design are trademarks of Golder Associates Corporation

Location: PCB Cells

No activity was noted

Location: CMT Borrow Area

Trees are being moved and chipped in the eastern portion of the borrow area. Some clearing and prep work has been conducted near the sediment basin.

5.0 DISCUSSIONS / MEETINGS

Personnel Involved:	NA
Location:	NA
Topics Covered:	NA

6.0 CQA TESTING PERFORMED ON-SITE

Location:	Autoclave
Test:	Periodic check of excavation depth (12-inch requirement)

7.0 COMMENTS / ISSUES / OTHER

None

8.0 EQUIPMENT ONSITE

Equipment on site:

Komat'su PC 78 MR Mini Excavator

Bobcat E 32 Mini Excavator

Komat'su WA 250 PT Skid Steer

Deere 329 E Skid Steer

Komat'su PC 78 MR Front-End Loader

9.0 PHOTOGRAPHS

None

FIELD MONITORING REPORT

Project No.:	1302962.CQA	**Project Title:**	OU-3 RA Cover Systems
Location:	Anniston, AL		
Owner:	Solutia, Inc.		
Contractor:	Taylor Corp.		

Date: Tuesday August 18, 2015

1.0 SITE CONDITIONS

Weather Condition:	Mostly cloudy with periodic heavy rain; thunderstorms in the afternoon
Temperature:	73 -87
Precipitation:	1.05 inches

2.0 HEALTH AND SAFETY

Issues:	Stay alert for lightening in the area

3.0 GOLDER PERSONNEL ON SITE

Name	Time on Site
Patrick Callahan	6:40 To 18:00

4.0 SUMMARY OF ACTIVITIES

Location: Autoclave

"Taylor's crew continues excavation progress in the north, west and east side of the autoclave area. Roll-offs, poly sheeting, and ""exclusion zone"" are in place as part of decontamination procedures.

7:20 to 7:45 work suspended due to heavy rain

10:15 Golder performs field measurement of excavation depths.

13:00 Josh Threadgill surveys in exposed areas of concrete along north side of autoclave

16:05 Komat'su mini excavator has contacted and damaged eastern-most PVC steam condensate line. Sump is dug at the toe of the autoclave slope and PVC is brought in to divert flow away from surface and into drain at toe of wall.

Excavation and chipping of concrete obstructions will continue on night shift."

Location: PCB Cells

No activity was noted. Some re-vegetation is occuring in select locations

Golder Associates Inc.
3730 Chamblee Tucker Road
Atlanta, GA 30341 USA
Tel: (770) 496-1893 Fax: (770) 934-9476 www.golder.com

Golder Associates: Operations in Africa, Asia, Australasia, Europe, North America and South America

Golder, Golder Associates and the GA globe design are trademarks of Golder Associates Corporation

Location: CMT Borrow Area

9:10 Golder inspects CMT borrow area. All trees are down and the tub chipper is in place, beginning to chip trees in the borrow area. A portion of the drainage swale is in place along east side of borrow area. A portion of the diversion berm directing flow into the sediment basin has been constructed. Survey stakes are in place to show limits of sediment basin and rip-rap

5.0 DISCUSSIONS / MEETINGS

Personnel Involved:	NA
Location:	NA
Topics Covered:	NA

6.0 CQA TESTING PERFORMED ON-SITE

Location:	Autoclave
Test:	Check of excavation 12-inch depth requirement

7.0 COMMENTS / ISSUES / OTHER

None

8.0 EQUIPMENT ONSITE

Komat'su PC 78 MR Mini Excavator
Bobcat E 32 Mini Excavator
Komat'su WA 250 PT Skid Steer
Deere 329 E Skid Steer
Komat'su PC 78 MR Front-End Loader

9.0 PHOTOGRAPHS

None

FIELD MONITORING REPORT

Project No.:	1302962.CQA	**Project Title:**	OU-3 RA Cover Systems
Location:	Anniston, AL		
Owner:	Solutia, Inc.		
Contractor:	Taylor Corp.		

Date: Wednesday, August 19, 2015

1.0 SITE CONDITIONS

Weather Condition:	Mostly cloudy with periodic light rain
Temperature:	74 – 89
Precipitation:	<0.1 inches

2.0 HEALTH AND SAFETY

Issues:	.Be sure to follow decontamination procedures

3.0 GOLDER PERSONNEL ON SITE

Name	Time on Site
Patrick Callahan	6:50 to 16:30
Steve Moeller	8:30 to 18:00

4.0 SUMMARY OF ACTIVITIES

Location: Autoclave

"Taylor's crew continues excavation progress in the north side and slope of the autoclave area. Roll-offs, poly sheeting, and ""exclusion zone"" are in place as part of decontamination procedures.

13:00 Taylor has laid out grade lines. EPA (T. Chuhay) and Golder (P. Callahan and S. Moeller) measure and verify excavation depths. Areas in which no obstructions are present are excavated down to a nominal 12 inches. Areas in which concrete obstructions are present at a depth less than 6 inches are being chipped out.

14:00 Begin placing DGA in eastern portion of Autoclave. Material is being spread to create a clean working surface. Equipment is being decontaminated accordingly.

Golder Associates Inc.
3730 Chamblee Tucker Road
Atlanta, GA 30341 USA
Tel: (770) 496-1893 Fax: (770) 934-9476 www.golder.com

Golder Associates: Operations in Africa, Asia, Australasia, Europe, North America and South America

Golder, Golder Associates and the GA globe design are trademarks of Golder Associates Corporation

Placement and compaction of DGA will continue on night shift.

Location: PCB Cells

No activity was noted.

Location: CMT Borrow Area

Stripping of topsoil; chipper is currently down due to mechanical issues.

5.0 DISCUSSIONS / MEETINGS

Personnel Involved:	RA Contractor, CQA, Solutia, and EPA
Location:	Trailer and Remediation Office
Topics Covered:	Weekly Progress Meetings (see meeting notes)

6.0 CQA TESTING PERFORMED ON-SITE

Location:	Autoclave
Test:	Check of excavation 12-inch depth requirement, with EPA oversight. Check of in-place soil compacting using probe rod.

7.0 COMMENTS / ISSUES / OTHER

None

8.0 EQUIPMENT ONSITE

Komat'su PC 78 MR Mini Excavator
Bobcat E 32 Mini Excavator
Komat'su WA 250 PT Skid Steer
Deere 329 E Skid Steer
Komat'su PC 78 MR Front-End Loader
Bobcat Mini Excavator with hydraulic hammer chisel attachment is being used to chip out concrete obstructions
IWI haul trucks are currently out of service due to mechaincal issues.

9.0 PHOTOGRAPHS



Photo 1: View of autoclave excavation from northwest stairs.



Photo 2: Begin placement of DGA material

FIELD MONITORING REPORT

Project No.:	1302962.CQA	**Project Title:**	OU-3 RA Cover Systems
Location:	Anniston, AL		
Owner:	Solutia, Inc.		
Contractor:	Taylor Corp.		

Date: Thursday, August 20, 2015

1.0 SITE CONDITIONS

Weather Condition:	Mostly sunny with periodic rain
Temperature:	73-88 °F
Precipitation:	0.8 inches

2.0 HEALTH AND SAFETY

Issues:	The autoclave is a tight working space, stay alert and watch for equipment.

3.0 GOLDER PERSONNEL ON SITE

Name	Time on Site
Patrick Callahan	6:30 to 16:00

4.0 SUMMARY OF ACTIVITIES

Location: Autoclave

"A majority of the autoclave soil has been removed; Taylor is chipping concrete obstructions and placing, spreading, and compacting dense graded aggregate (DGA) soil.

7:10 Acker Electrical is on site to update grounding cables to allow for concrete to be poured.

Fabric has been placed under DGA in southeast corner (in vicinity of fire water pump and valves)

Taylor is checking grades to ensure proper drainage and prepare for 6-inch concrete cover.

11:00 Brown Concrete begin placing wood form for new wall on northwest side of autoclave.

11:10 Golder begins to test compaction of DGA along the southern and eastern end of the autoclave. Based on nuclear density gauge testing, Golder recommends that 4 to 5 passes with the plate tamper is sufficient. A new, larger plate tamper is delivered to site for increased compaction effort. Results of nuclear density gauge testing are attached.

Golder Associates Inc.
3730 Chamblee Tucker Road
Atlanta, GA 30341 USA
Tel: (770) 496-1893 Fax: (770) 934-9476 www.golder.com

Golder Associates: Operations in Africa, Asia, Australasia, Europe, North America and South America

Golder, Golder Associates and the GA globe design are trademarks of Golder Associates Corporation

12:30 Due to a decrease in water content of the DGA material, Golder recommends that Taylor spray the surface of DGA prior to compaction.

13:30 Brown begins placing forms along southern portion of the autoclave. Forms are laid out in order to comply with the 20-foot expansion joint spacing. An open slabe is left between each form to allow for expansion joints. Edges of slab and contact with existing concrete are lined with fiber expansion joints.

#4 Re-bar is being places approximately 3 inches from ground surface, at 12 inches on-center-each-way (OCEW).

15:00 Light to moderate rain begins to fall

Placement and compaction of DGA will continue on night shift.

Location: PCB Cells

No activity was noted

Location: CMT Borrow Area

Stripping of topsoil; chipper is currently down due to mechanical issues

5.0 DISCUSSIONS / MEETINGS

Personnel Involved:	NA
Location:	NA
Topics Covered:	NA

6.0 CQA TESTING PERFORMED ON-SITE

Location:	Autoclave
Test:	Compaction testing of DGA material using nuclear density gauge (ASTM D6938) at a testing interval of 3 tests per day. Results of nuclear density gauge testing are attached.

7.0 COMMENTS / ISSUES / OTHER

None

8.0 EQUIPMENT ONSITE

Komat'su PC 78 MR Mini Excavator
Bobcat E 32 Mini Excavator
Komat'su WA 250 PT Skid Steer
Deere 329 E Skid Steer
Komat'su PC 78 MR Front-End Loader
Bobcat Mini Excavator with hydraulic hammer chisel attachment is being used to chip out concrete obstructions
Plate tampers for compaction of DGA

9.0 PHOTOGRAPHS



Photo 1: Compacting of DGA material



Photo 2: Concrete forms and re-bar being constructed on southern portion of autoclave

FIELD MONITORING REPORT

Project No.:	1302962.CQA	**Project Title:**	OU-3 RA Cover Systems
Location:	Anniston, AL		
Owner:	Solutia, Inc.		
Contractor:	Taylor Corp.		

Date: Friday, August 21, 2015

1.0 SITE CONDITIONS

Weather Condition:	Overcast and partly sunny with periodic rain in the afternoon
Temperature:	74 – 90 °F
Precipitation:	0.1 inches

2.0 HEALTH AND SAFETY

Issues:	Multiple contractors are working in the area, stay alert

3.0 GOLDER PERSONNEL ON SITE

Name	Time on Site
Patrick Callahan	6:45 to 16:45

4.0 SUMMARY OF ACTIVITIES

Location: Autoclave

"A majority of the autoclave soil has been removed; Taylor is placing, spreading, and compacting dense graded aggregate (DGA) soil. Three (3) concrete forms and re-bar are in place along the south side of the autoclave and are ready for pouring.

Four concrete cylinders have been collected by Webb Concrete from the first truck of the day.

Each concrete delivery is being checked by the J. Threadgill (Construction Manager) for mix design.

7:15 Pouring of concrete begins on south side of autoclave

8:05 Taylor is using plate tamper and mini-excavator to compact DGA materail along the north slope.

9:00 Second concrete truck is on site.

Tarracon is on site to perform field testing for concrete parameters. The following tests were run on truck #2 of the day:

Golder Associates Inc.
3730 Chamblee Tucker Road
Atlanta, GA 30341 USA
Tel: (770) 496-1893 Fax: (770) 934-9476 www.golder.com

Golder Associates: Operations in Africa, Asia, Australasia, Europe, North America and South America

Golder, Golder Associates and the GA globe design are trademarks of Golder Associates Corporation

Slump: 6.0 inches

Air Entrainment: 5.0%

Temp:

4 cylinders were poured for compressive strength testing (will be picked up the following day)

11:40 Schedule 80 PVC pipe is delivered to site; to be used to collect water from steam blow-down lines.

Taylor is connecting pipe and fittings, and trenching DGA in order to place pipe.

15:30 New concrete forms and rebar are being constructed in three (3) locations to prepare for pour on 8/22. D. Williams (Construction Manager) will be on site on 8/22 to observe activity.

16:20 Golder performs nuclear density gauge testing on newly-compacted areas on the east and north side of the autoclave. Light rain begins."

Location: PCB Cells

No activity was noted.

Location: CMT Borrow Area

Stripping of topsoil; chipper is currently down due to mechanical issues.

5.0 DISCUSSIONS / MEETINGS

Personnel Involved:	R. Brown (Brown Concrete), P. Callahan (Golder), Randy (Taylor), S. Patat (Taylor)
Location:	Autoclave
Topics Covered:	The Plant would like to run PVC lines to collect water from autoclave steam lines. The Plant recommends using schedule 80 PVC due to temperature of condensate. Golder recommends that the lines be placed within the DGA in order to avoid contact with concrete.

6.0 CQA TESTING PERFORMED ON-SITE

Location:	Autoclave
Test:	"Visual inspection of concrete forms, expansion joints, and re-bar placement.

7.0 COMMENTS / ISSUES / OTHER

None

8.0 EQUIPMENT ONSITE

Komat'su PC 78 MR Mini Excavator

Bobcat E 32 Mini Excavator

Komat'su WA 250 PT Skid Steer

Deere 329 E Skid Steer

Komat'su PC 78 MR Front-End Loader

Concrete pump truck with extendable boom.

Plate tampers for compaction of DGA

9.0 PHOTOGRAPHS

None

FIELD MONITORING REPORT

Project No.:	1302962.CQA	**Project Title:**	OU-3 RA Cover Systems
Location:	Anniston, AL		
Owner:	Solutia, Inc.		
Contractor:	Taylor Corp.		

Date: Monday, August 24, 2015

1.0 SITE CONDITIONS

Weather Condition:	Mostly Sunny
Temperature:	69 - 91 °F
Precipitation:	None

2.0 HEALTH AND SAFETY

Issues:	Be aware of traffic conditions while crossing HWY 202

3.0 GOLDER PERSONNEL ON SITE

Name	Time on Site
Patrick Callahan	6:45 **to** 19:30

4.0 SUMMARY OF ACTIVITIES

Location: Autoclave

Concrete has been poured along the south and west side of the autoclave. Compaction of DGA and forming of new slabs continues.

8:40 Concrete contraction joints have been cut on slabs poured on 8/21/2015. Brown is currently laying out and cutting contraction joints on slabs poured on 8/22/2015.

9:00 New concrete forms and rebar are being constructed in three (3) locations to prepare for pour this afternoon.

12:50 Discussion with E. Bennett regarding concrete testing schedule. Golder has recommended that Terracon be on site for the first concrete truck of each day. Terracon will not be available today for testing; therefore Golder has requested that Webb Concrete bring and slump cone to be tested by Golder.

14:00 Taylor is placing toe drain pipe, geotextile, and No. 57 stone.

16:15 First concrete truck arrives. Golder performs slump testing.

- Slump: 5.75 inches

Golder Associates Inc.
3730 Chamblee Tucker Road
Atlanta, GA 30341 USA
Tel: (770) 496-1893 Fax: (770) 934-9476 www.golder.com

Golder Associates: Operations in Africa, Asia, Australasia, Europe, North America and South America

Golder, Golder Associates and the GA globe design are trademarks of Golder Associates Corporation

- Temp: 86 F

Each concrete delivery is being checked by the J. Threadgill (Construction Manager) for mix design.

17:00 Second concrete truck on site

17:45 Third concrete truck on site

18:30 Fourth concrete truck on site

Location: PCB Cells

No activity was noted

Location: CMT Borrow Area

Stripping of topsoil; chipper is currently down due to mechanical issues. Excavator and dozier is being used to construct the sediment basin. Golder verifies the location of the berm and rip-rap inlets.

Equipment on site:

- Komat'su PC 78 MR Mini Excavator
- Bobcat E 32 Mini Excavator
- Komat'su WA 250 PT Skid Steer
- Deere 329 E Skid Steer
- Komat'su PC 78 MR Front-End Loader
- Bobcat Mini Excavator with hydraulic hammer chisel attachment is being used to chip out concrete obstructions
- Plate tampers for compaction of DGA

5.0 DISCUSSIONS / MEETINGS

Personnel Involved:	P. Callahan (Golder) and Randy (Taylor)
Location:	Autoclave
Topics Covered:	Taylor has asked for clarification on the toe drain system. Golder has instructed Taylor to place the 2-inch PVC; pipe may be cut and capped in areas where existing steam condensate lines interfere with the alignment. Golder clarifies that the drainage system should be placed 3 feet back from the wall, pipe should be approximately 1 inch higher than the top of the wall to promote drainage, surrounded by No. 57 stone, and wrapped with 6-ounce geotextile. Concrete will extend down the slope and extend 6-inches below the top of the existing wall.

6.0 CQA TESTING PERFORMED ON-SITE

Location:	Autoclave
Test:	Visual inspection of concrete forms, expansion joints, and re-bar placement. Concrete properties testing.

7.0 COMMENTS / ISSUES / OTHER

13:00 Discussion with R. Brown (Concrete Sub) and D. Williams (Construction Manager) regarding the expansion joint / slab spacing on the east side of the autoclave. Golder has approved a deviation in the expansion joint spacing to allow for sloping of the concrete surface for drainage. Eastern-most form will be approximately 14-feet wide, and the next two slabs will be extended to approximately 24-feet wide. Re-bar will be lapped by 2-feet.

8.0 PHOTOGRAPHS



Photograph 1: Placement of fiber expansion joint and re-bar



Photograph 2: Compacted DGA on the east side of the autoclave



Photograph 3: Compacted DGA on the east side of the autoclave

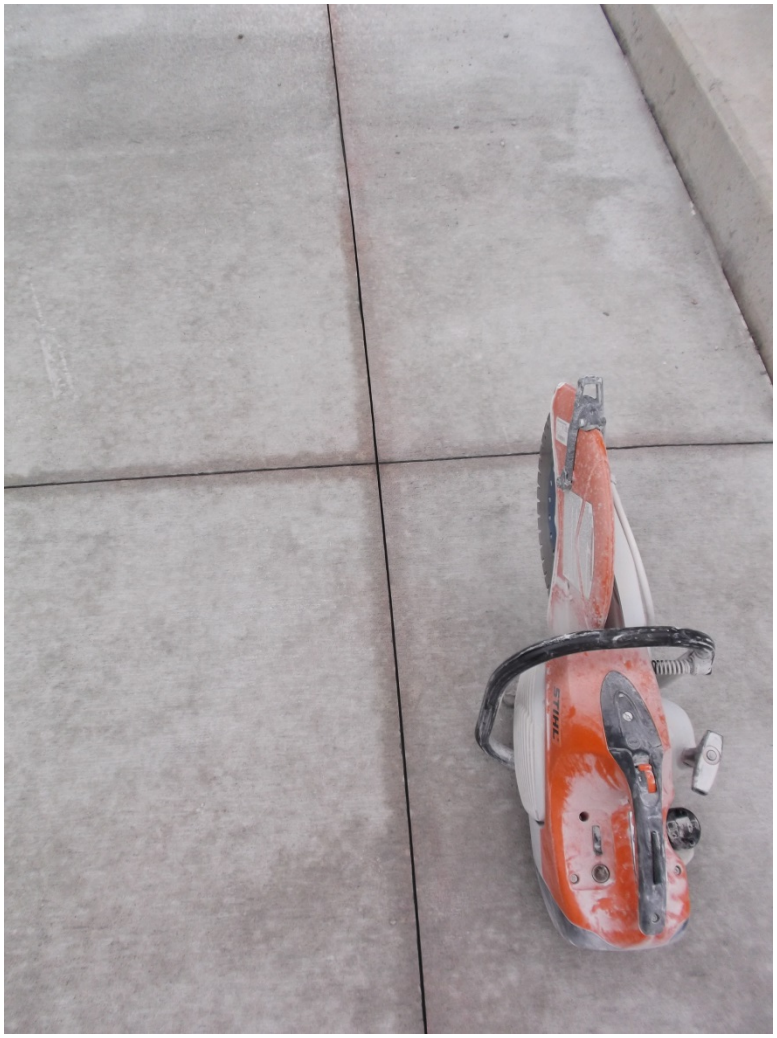

Photograph 4: Cutting of concrete contraction joint

FIELD MONITORING REPORT

Project No.:	1302962.CQA	**Project Title:**	OU-3 RA Cover Systems
Location:	Anniston, AL		
Owner:	Solutia, Inc.		
Contractor:	Taylor Corp.		

Date: Tuesday, August 25, 2015

1.0 SITE CONDITIONS

Weather Condition:	Clear
Temperature:	59 - 83 °F
Precipitation:	None

2.0 HEALTH AND SAFETY

Issues:	Stray dogs were spotted at CMT Borrow Area, stay alert and do not interact with them

3.0 GOLDER PERSONNEL ON SITE

Name	Time on Site
Patrick Callahan	7:00 **to** 16:00
Steve Moeller	15:00 **to** 16:00

4.0 SUMMARY OF ACTIVITIES

Location: Autoclave

Concrete has been poured along the south and west side, and in portions of the north side of the autoclave. Compaction of DGA is complete.

8:40 Forms are being removed from concrete slabs poured on 8/25/2015. Expansion joints are being attached to face of exposed concrete.

12:30 Terracon on site; indicated that the results of the 6”x12” molds poured on 8/21/2015 had a 3-day break strength of approximately 2.850 psi. D. Williams (Construction Manager) directed Brown Concrete to remove form boards along the northwest wall.

12:50 Concrete pump truck on site

13:30 First concrete truck on site; truck is directed to rotate hopper approximately 75 times to ensure a uniform mix. Each concrete delivery is being checked by the J. Threadgill (Construction Manager) for mix

Golder Associates Inc.
3730 Chamblee Tucker Road
Atlanta, GA 30341 USA
Tel: (770) 496-1893 Fax: (770) 934-9476 www.golder.com

Golder Associates: Operations in Africa, Asia, Australasia, Europe, North America and South America

Golder, Golder Associates and the GA globe design are trademarks of Golder Associates Corporation

design. Tarracon performs field testing for concrete parameters. The following tests were run on truck #1 of the day:

- Slump: 4.5 inches
- Air Entrainment: 6.0%
- Temp: 77 F
- 4 cylinders were poured for compressive strength testing (will be picked up the following day)

14:30 Second concrete truck on site.

15:10 Third concrete truck on site.

Location: PCB Cells

No activity was noted

Location: CMT Borrow Area

No activity was noted

5.0 DISCUSSIONS / MEETINGS

Personnel Involved:	NA
Location:	NA
Topics Covered:	NA

6.0 CQA TESTING PERFORMED ON-SITE

Location:	Autoclave
Test:	Visual inspection of concrete forms, expansion joints, and re-bar placement. Concrete properties testing.

7.0 COMMENTS / ISSUES / OTHER

NA

8.0 PHOTOGRAPHS



Photograph 1: Placement of fiber expansion joint and re-bar



Photograph 2: Placement of toe drain with No. 57 stone

FIELD MONITORING REPORT

Project No.:	1302962.CQA	**Project Title:**	OU-3 RA Cover Systems
Location:	Anniston, AL		
Owner:	Solutia, Inc.		
Contractor:	Taylor Corp.		

Date: Wednesday, August 26, 2015

1.0 SITE CONDITIONS

Weather Condition:	Clear
Temperature:	55 - 85 °F
Precipitation:	None

2.0 HEALTH AND SAFETY

Issues:	Sign in and out of autoclave control room every time you enter/leave the work area

3.0 GOLDER PERSONNEL ON SITE

Name	Time on Site
Patrick Callahan	7:00 **to** 17:00
Steve Moeller	8:15 **to** 12:00

4.0 SUMMARY OF ACTIVITIES

Location: Autoclave

Concrete has been poured along the south and west side, and in portions of the north side of the autoclave. Compaction of DGA is complete.

Forms are being removed from concrete slabs poured on 8/25/2015. Expansion joints are being attached to face of exposed concrete.

11:45 Discussion with gutter subcontractor on gutter installation; end pieces should be used at each obstruction, and silicone sealant should be used where gutter joins to concrete.

12:30 Concrete pump truck on site

12:30 Terracon on site

12:50 First concrete truck on site; truck is directed to rotate hopper approximately 75 times to ensure a uniform mix. Each concrete delivery is being checked by the J. Threadgill (Construction Manager) for mix

Golder Associates Inc.
3730 Chamblee Tucker Road
Atlanta, GA 30341 USA
Tel: (770) 496-1893 Fax: (770) 934-9476 www.golder.com

Golder Associates: Operations in Africa, Asia, Australasia, Europe, North America and South America

Golder, Golder Associates and the GA globe design are trademarks of Golder Associates Corporation

design. Tarracon performs field testing for concrete parameters. The following tests were run on truck #1 of the day:

- Slump: 5.75 inches
- Air Entrainment: 5.0%
- Temp: 77 F
- 4 cylinders were poured for compressive strength testing (will be picked up the following day)

14:30 Second concrete truck on site.

All deck slabs have been poured.

Location: Area E

11:15 P. Callahan and S. Moeller (Golder), L. Taylor and E. Bennet (Taylor), and D. Williams and J. Threadgill (Construction Managers) walk Area E and discuss wall alignment. Golder is currently updating the Area E wall detail and will provide to Taylor prior to footing excavation on Monday 8/31/2015.

Footing will be 18-inches wide and 12-inches deep. Footing should follow existing sidewalk and curb.

Location: PCB Cells

9:00 Disking of the PCB cells has begun. D. Williams (Construction Manager) has instructed Taylor to make several passes and "cross-disk" in perpendicular directions.

9:15 P. Callahan and S. Moeller visit PCB Cells. Disking is in progress. Golder recommends to Taylor that organic material and debris be stripped from the east and west boundaries. These areas have excessive rocks and branches.

Location: CMT Borrow Area

9:50 P. Callahan and S. Moeller visit CMT Borrow Area. A new chipper is being delivered and a truck is leaving the site with a load of chips.

5.0 DISCUSSIONS / MEETINGS

Personnel Involved:	Construction Team (Golder, Solutia, and Taylor)
Location:	Construction trailer
Topics Covered:	Weekly construction progress meeting. See meeting notes for details.

6.0 CQA TESTING PERFORMED ON-SITE

Location:	Autoclave
Test:	Visual inspection of concrete forms, expansion joints, and re-bar placement. Concrete properties testing.

7.0 COMMENTS / ISSUES / OTHER

NA

8.0 PHOTOGRAPHS



Photograph 1: Clearing, stripping, and chipping at the CMT Borrow Area



Photograph 2: Disking beginning at the PCB Cells

FIELD MONITORING REPORT

Project No.:	1302962.CQA	**Project Title:**	OU-3 RA Cover Systems
Location:	Anniston, AL		
Owner:	Solutia, Inc.		
Contractor:	Taylor Corp.		

Date: Thursday, August 27, 2015

1.0 SITE CONDITIONS

Weather Condition:	Partly Cloudy
Temperature:	62 - 88 °F
Precipitation:	None

2.0 HEALTH AND SAFETY

Issues:	Make eye contact and signal to equipment operator when approaching. Never approach a piece of equipment that is moving.

3.0 GOLDER PERSONNEL ON SITE

Name	Time on Site
Patrick Callahan	6:45 **to** 16:30

4.0 SUMMARY OF ACTIVITIES

Location: Autoclave

Concrete has been poured along the entire upper area of the autoclave. Forms are being removed from concrete slabs poured on 8/26/2015 and new forms and re-bar are being placed along north slope. Expansion joints are being attached to face of exposed concrete.

7:45 Plant tests sprinkler system of autoclave; the autoclave's new concrete drainage path works correctly.

10:45 Terracon on site

10:50 First concrete truck on site; truck is directed to rotate hopper approximately 75 times to ensure a uniform mix. Each concrete delivery is being checked by the J. Threadgill (Construction Manager) for mix design. The mixed used for today's pour is slightly thicker due to placement on the slope. Concrete is being placed using an excavator bucket.

Tarracon performs field testing for concrete parameters. The following tests were run on truck #1 of the day:

Golder Associates Inc.
3730 Chamblee Tucker Road
Atlanta, GA 30341 USA
Tel: (770) 496-1893 Fax: (770) 934-9476 www.golder.com

Golder Associates: Operations in Africa, Asia, Australasia, Europe, North America and South America

Golder, Golder Associates and the GA globe design are trademarks of Golder Associates Corporation

- Slump: 3.5 inches
- Air Entrainment: 5.5%
- Temp: 85 F
- 4 cylinders were poured for compressive strength testing (will be picked up the following day)

13:00 Second concrete truck on site.

Location: Area E

7:30 Taylor is beginning to cordon off Area E prior to application of herbicide.

11:00 A temporary staging area for roll-off containers is being constructed within the footprint of the future control room. Area is constructed using geotextile fabric, No. 57 stone, and DGA.

Location: PCB Cells

9:45 Taylor is beginning to roll the PCB cells with a sheep's-foot roller.

10:15 P. Callahan, D. Williams and J. Threadgill (Construction Managers) drive to PCB cells to check progress of rolling. Roller is directed to make several passes in previously-noted low spots and seep in order to test stability. Two areas are marked off with paint and surveyed to be constructed as a "bridging" layer.

Location: CMT Borrow Area

Trees are being chipped. New silt fence is in place along proposed stockpile area.

5.0 DISCUSSIONS / MEETINGS

Personnel Involved:	NA
Location:	NA
Topics Covered:	NA

6.0 CQA TESTING PERFORMED ON-SITE

Location:	Autoclave
Test:	Visual inspection of concrete forms, expansion joints, and re-bar placement. Concrete properties testing.

7.0 COMMENTS / ISSUES / OTHER

NA

8.0 PHOTOGRAPHS



Photograph 1: Temporary staging area for roll-offs in Area E



Photograph 2: Rolling has begun at the PCB Cells



Photograph 3: Placing concrete along the autoclave's north slope



Photograph 4: Finished area of the autoclave

FIELD MONITORING REPORT

Project No.:	1302962.CQA	**Project Title:**	OU-3 RA Cover Systems
Location:	Anniston, AL		
Owner:	Solutia, Inc.		
Contractor:	Taylor Corp.		

Date: Friday, August 28, 2015

1.0 SITE CONDITIONS

Weather Condition:	Partly Cloudy
Temperature:	67 - 87 °F
Precipitation:	None

2.0 HEALTH AND SAFETY

Issues:	Be sure to follow plant's policy of long-sleeve, hi-vis clothing.

3.0 GOLDER PERSONNEL ON SITE

Name	Time on Site
Patrick Callahan	6:45 **to** 14:30

4.0 SUMMARY OF ACTIVITIES

Location: Autoclave

Concrete has been poured along the entire upper area of the autoclave. Forms are being removed from concrete slabs poured on 8/27/2015 and new forms and re-bar are being placed along north slope. Expansion joints are being attached to face of exposed concrete.

10:10 Terracon on site

10:10 First concrete truck on site; truck is directed to rotate hopper approximately 75 times to ensure a uniform mix. Each concrete delivery is being checked by the J. Threadgill (Construction Manager) for mix design. The mixed used for today's pour is slightly thicker due to placement on the slope. Concrete is being placed using an excavator bucket.

Tarracon performs field testing for concrete parameters. The following tests were run on truck #1 of the day:

- Slump: 3.0 inches
- Air Entrainment: 6.0%
- Temp: 83 F
- 4 cylinders were poured for compressive strength testing (will be picked up the following day)

Golder Associates Inc.
3730 Chamblee Tucker Road
Atlanta, GA 30341 USA
Tel: (770) 496-1893 Fax: (770) 934-9476 www.golder.com

Golder Associates: Operations in Africa, Asia, Australasia, Europe, North America and South America

Golder, Golder Associates and the GA globe design are trademarks of Golder Associates Corporation

13:30 Walk-through of autoclave area with Plant personnel to assign turn-over. Punch-list items identified include:

- Installation of gutters and downspouts (planned for Tuesday 9/1/2015);
- "Rubbing down" and smoothing of walls;
- Sealing of joints; and,
- Wash down and cleanup work area.

Location: Area E

10:30 P. Callahan (Golder) and R. Goodwin (Taylor) discuss the alignment and construction of Area E wall. Wall should butt-up against the existing sidewalk and curb along the north, south, and east sides. The excavation for the wall's footing should be 18-inches wide and 12-inches deep.

Location: PCB Cells

7:15 D. Williams (Construction Manager) has requested to roll the PCB Cells with a smooth-drum roller to prevent runoff issues due to rain in the forecast.

Location: CMT Borrow Area

Grading and excavation

5.0 DISCUSSIONS / MEETINGS

Personnel Involved:	P. Callahan (Golder) and R. Goodwin (Taylor)
Location:	CMT Borrow Area
Topics Covered:	P. Callahan (Golder) and R. Goodwin (Taylor) discuss future work to be done within the stormwater detention basin (SDB). Taylor needs to place the inlet riser on a concrete foundation and connect a corrugated metal pipe (CMP) outlet pipe. The pipe needs to extend from the base of the inlet structure and through the SDB embankment as shown on the construction best management practice plan (CBMPP) drawings.

6.0 CQA TESTING PERFORMED ON-SITE

Location:	Autoclave
Test:	Visual inspection of concrete forms, expansion joints, and re-bar placement. Concrete properties testing.

7.0 COMMENTS / ISSUES / OTHER

NA

8.0 PHOTOGRAPHS



Photograph 1: North side of autoclave



Photograph 2: South side of autoclave



Photograph 3: East side of autoclave

FIELD MONITORING REPORT

Project No.:	1302962.CQA	**Project Title:**	OU-3 RA Cover Systems
Location:	Anniston, AL		
Owner:	Solutia, Inc.		
Contractor:	Taylor Corp.		

Date: Monday, August 31, 2015

1.0 SITE CONDITIONS

Weather Condition:	Mostly Cloudy
Temperature:	69 - 83 °F
Precipitation:	None

2.0 HEALTH AND SAFETY

Issues:	Familiarize yourself with new work areas prior to commencing work.

3.0 GOLDER PERSONNEL ON SITE

Name	Time on Site
Patrick Callahan	6:45 **to** 16:00

4.0 SUMMARY OF ACTIVITIES

Location: Autoclave

Concrete has been poured along the entire autoclave. Taylor is currently working to apply joint sealer in expansion and contraction joints. Silkaflex 1C is being applied with caulk guns.

Location: Area E

No activity noted.

Location: PCB Cells

Cells were rolled with a smooth-drum on Friday 8/28/2015, and area was inspected by Taylor after rain event on 8/30/2015. Areas of “soft spots” were flagged.

Location: CMT Borrow Area

Grading and excavation; prepare stormwater detention basin

Golder Associates Inc.
3730 Chamblee Tucker Road
Atlanta, GA 30341 USA
Tel: (770) 496-1893 Fax: (770) 934-9476 www.golder.com

Golder Associates: Operations in Africa, Asia, Australasia, Europe, North America and South America

Golder, Golder Associates and the GA globe design are trademarks of Golder Associates Corporation

5.0 DISCUSSIONS / MEETINGS

Personnel Involved:	P. Callahan (Golder) and R. Goodwin (Taylor)
Location:	CMT Borrow Area
Topics Covered:	Discuss alignment, elevation, and layout of stormwater detention basin. The crest elevation and riser pipe inlet elevations should be built as shown on the Erosion and Sediment Control plans. Surface water running off of the CMT Borrow Area should be directed into the stormwater detention basin.

6.0 CQA TESTING PERFORMED ON-SITE

Location:	NA
Test:	NA

7.0 COMMENTS / ISSUES / OTHER

NA

8.0 PHOTOGRAPHS



Photograph 1: PCB cells after disking and rolling.



Photograph 2: PCB cells after disking and rolling. Area shown in the photograph is flagged to receive a "bridging layer".

FIELD MONITORING REPORT

Project No.:	1302962.CQA	**Project Title:**	OU-3 RA Cover Systems
Location:	Anniston, AL		
Owner:	Solutia, Inc.		
Contractor:	Taylor Corp.		

Date: Tuesday, September 1, 2015

1.0 SITE CONDITIONS

Weather Condition:	Mostly Cloudy
Temperature:	69 - 83 °F
Precipitation:	None

2.0 HEALTH AND SAFETY

Issues:	Familiarize yourself with new work areas prior to commencing work.

3.0 GOLDER PERSONNEL ON SITE

Name	Time on Site
Patrick Callahan	6:45 **to** 17:00

4.0 SUMMARY OF ACTIVITIES

Location: Autoclave

Concrete has been poured along the entire autoclave. Taylor is currently working to apply joint sealer in expansion and contraction joints. Silkaflex 1C is being applied with caulk guns.

9:00 Gutter subcontractor is on site to install gutter at autoclave.

Location: Area E

No activity noted.

Location: PCB Cells

Cells were rolled with a smooth-drum on Friday 8/28/2015, and area was inspected by Taylor after rain event on 8/30/2015.

Location: CMT Borrow Area

Taylor continues to prepare the borrow area and stormwater detention basin.

Golder Associates Inc.
3730 Chamblee Tucker Road
Atlanta, GA 30341 USA
Tel: (770) 496-1893 Fax: (770) 934-9476 www.golder.com

Golder Associates: Operations in Africa, Asia, Australasia, Europe, North America and South America

Golder, Golder Associates and the GA globe design are trademarks of Golder Associates Corporation

5.0 DISCUSSIONS / MEETINGS

Personnel Involved:	NA
Location:	NA
Topics Covered:	NA

6.0 CQA TESTING PERFORMED ON-SITE

Location:	NA
Test:	NA

7.0 COMMENTS / ISSUES / OTHER

NA

8.0 PHOTOGRAPHS

None

FIELD MONITORING REPORT

Project No.:	1302962.CQA	**Project Title:**	OU-3 RA Cover Systems
Location:	Anniston, AL		
Owner:	Solutia, Inc.		
Contractor:	Taylor Corp.		

Date: Thursday, September 3, 2015

1.0 SITE CONDITIONS

Weather Condition:	Partly Cloudy
Temperature:	69 - 88 °F
Precipitation:	none

2.0 HEALTH AND SAFETY

Issues:	Slips/Trips/Falls

3.0 GOLDER PERSONNEL ON SITE

Name	Time on Site
Shawn Casey	6:20 **to** 16:00

4.0 SUMMARY OF ACTIVITIES

Location: Autoclave

No activity noted

Location: Area E

No activity noted.

Location: PCB Cells

No activity noted

Location: CMT Borrow Area

Contractor continuing to chip the remaining trees, blade off topsoil, and continue with drain pipe and outlet pipe install in the stormwater basin.

Golder Associates Inc.
3730 Chamblee Tucker Road
Atlanta, GA 30341 USA
Tel: (770) 496-1893 Fax: (770) 934-9476 www.golder.com

Golder Associates: Operations in Africa, Asia, Australasia, Europe, North America and South America

Golder, Golder Associates and the GA globe design are trademarks of Golder Associates Corporation

Location: Groundwater Extraction System

Shawn/Kevin (Golder) and Jerry Hopper (Solutia) went to look at well 14A where new lines will be attached for new system. Also went up to the PCB LF area to look at the area where new flowmeter vaults will be installed

5.0 DISCUSSIONS / MEETINGS

Personnel Involved:	
Location:	
Topics Covered:	

6.0 CQA TESTING PERFORMED ON-SITE

Location:	NA
Test:	NA

7.0 COMMENTS / ISSUES / OTHER

Contractor drilled holes in the concrete stormwater detention basin inlet. The first set of holes are approximately 16-in off bottom grade, and the second set 42-in above grade. According to specification, the holes should be 1ft and 3ft from bottom grade. Also holes are 5" diameter where specification called for 4"

8.0 EQUIPMENT ONSITE

JD tractor/disc, Volvo compactor smooth drum, 2 Komatsu 210 excavators, SAKAI compactor sheeps foot, JD excavator 270, Komatsu dozer 39EX, Vermeer wood chipper, Komatsu excavator 228, JD skidsteer 329E

9.0 PHOTOGRAPHS



Drilling holes in concrete inlet structure



Diversion berm in southest of CMT Borrow Area



Pile of organic material

FIELD MONITORING REPORT

Project No.:	1302962.CQA	**Project Title:**	OU-3 RA Cover Systems
Location:	Anniston, AL		
Owner:	Solutia, Inc.		
Contractor:	Taylor Corp.		

Date: Tuesday, September 8, 2015 (Construction crew on Labor Day Holiday 9/5 – 9/7)

1.0 SITE CONDITIONS

Weather Condition:	Partly Cloudy
Temperature:	68 - 88 °F
Precipitation:	none

2.0 HEALTH AND SAFETY

Issues:	Severe weather expected this week.

3.0 GOLDER PERSONNEL ON SITE

Name	Time on Site
Shawn Casey	6:10 **to** 16:00

4.0 SUMMARY OF ACTIVITIES

Location: Autoclave

No activity noted

Location: Area E

0900 Taylor is mobilizing equipment to the area, mini excavator and front end loader with 5 men. Dug 3 pothole along the south side of perimeter of Area E

1230 started excavating trench along south perimeter of Area E

1500 contractor has 50ft of trench excavated along south side of Area E with DGA placed and compacted

Location: PCB Cells

No activity noted

Location: CMT Borrow Area

0620 Fire noted in CMT Borrow area wood chip pile

Golder Associates Inc.
3730 Chamblee Tucker Road
Atlanta, GA 30341 USA
Tel: (770) 496-1893 Fax: (770) 934-9476 www.golder.com

Golder Associates: Operations in Africa, Asia, Australasia, Europe, North America and South America

Golder, Golder Associates and the GA globe design are trademarks of Golder Associates Corporation

Contractor working on the soil screener to get it ready for use. The screener was delivered to site on 9/4/15. Contractor built a shelf for the screener SW corner of the site and also continued to build Dike along west limits to the drainage basin

Location: Groundwater Extraction System

Josh and Shawn went to look for the manhole across the tracks for the new well install but could not locate it with the coordinates given. Don't think it is there any longer. There is a cemented ditch along the railroad track that was installed in 2002 and suspect that is when the manhole was likely taken out.

5.0 DISCUSSIONS / MEETINGS

Personnel Involved:	NA
Location:	NA
Topics Covered:	NA

6.0 CQA TESTING PERFORMED ON-SITE

Location:	NA
Test:	NA

7.0 COMMENTS / ISSUES / OTHER

0620 it was noticed from the field trailers that there was smoke in the borrow source area. Upon further investigation it was found that the chip pile was on fire. According to a Taylor employee who lives in the area he noticed smoke there on 9/5/15 but thought it might have been a nearby neighbor. Apparently the fire was reported to the fire department that same day.

8.0 EQUIPMENT ONSITE

JD tractor/disc, Volvo compactor smooth drum, 2 Komatsu 210 excavators, SAKAI compactor sheep's foot, JD excavator 270, Komatsu dozer 39EX, Vermeer wood chipper(removed from site 9/8/15), Komatsu excavator 228, JD skid steer 329E, EXTEC soil screener. Taylor men onsite 11

9.0 PHOTOGRAPHS



Wood chip pile on fire



Pothole south perimeter Area E for retaining wall

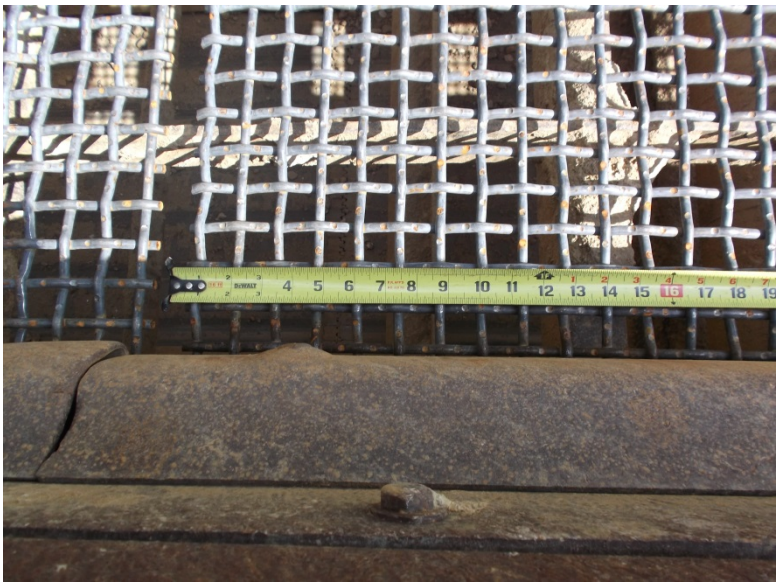

Screen size for soils



Building Dike and shelf for screener west side of Borrow area



Trench with compacted DGA south limits Area E

FIELD MONITORING REPORT

Project No.:	1302962.CQA	**Project Title:**	OU-3 RA Cover Systems
Location:	Anniston, AL		
Owner:	Solutia, Inc.		
Contractor:	Taylor Corp.		

Date: Wednesday, September 9, 2015

1.0 SITE CONDITIONS

Weather Condition:	Partly Cloudy
Temperature:	68 - 88 °F
Precipitation:	0.2 last night

2.0 HEALTH AND SAFETY

Issues:	Be watchful of other people while working in Area E 10 men onsite

3.0 GOLDER PERSONNEL ON SITE

Name	Time on Site
Shawn Casey	6:15 **to** 16:30

4.0 SUMMARY OF ACTIVITIES

Location: Autoclave

No activity noted

Location: Area E

0730 pothole along the east limits working S to N

1000 encountered an electric line at approx. STA 4+30. Also encountered an iron pipe just below sidewalk elevation at approx. 3+90.

1445 Start backfilling trench with DGA east limits working S to N.

Contractor excavated and backfilled with DGA 80ft of trench today along the south and east limits. Sopped at STA 3+69

Golder Associates Inc.
3730 Chamblee Tucker Road
Atlanta, GA 30341 USA
Tel: (770) 496-1893 Fax: (770) 934-9476 www.golder.com

Golder Associates: Operations in Africa, Asia, Australasia, Europe, North America and South America

Golder, Golder Associates and the GA globe design are trademarks of Golder Associates Corporation

Locations for BGS objects

Station	Object	Depth
4+63	Gas	10in
4+46	Gas	10in
4+30	Electric	10in
4+29	Electric	10in
4+01	Pipe	10”
3+98 – 3+90	Concrete	8.5”
3+87 – 3+85	P-C-P	8”-6.5”-4”
3+79	Pipe	10.5”
3+69	Pipe	5”

Location: PCB Cells

Walked area with Josh to check out the west and eastern sides of the limits for roots/rocks. West side of site still has some clean up to be completed

Location: CMT Borrow Area

Contractor started to knock down the wood chip pile during the evening to speed up the process of extinguishing the fire

0800 continue to build shelf/prep area for the screener SW corner of the site

1030 Contractor discussed the wood chip fire. Going to continue to burn/move pile until tomorrow then try to extinguish it with the water truck.

Afternoon: Started the emergency spillway at the drainage basin. Dumped rock for the check dam south of the basin but did not add fabric below the rock. Golder informed contractor that 10oz fabric needs to be placed under the rip rap in all applications for rip rap rock.

Location: Groundwater Extraction System

No activity

5.0 DISCUSSIONS / MEETINGS

Personnel Involved:	Shawn/Patrick
Location:	PCB cells
Topics Covered:	Showed Patrick where limits of liner will need to be moved on both the east and west side of the site

6.0 CQA TESTING PERFORMED ON-SITE

Location:	Area E and Borrow pit
Test:	Grab samples for granular drainage(Area E) rock and rip rap(Borrow pit)

7.0 COMMENTS / ISSUES / OTHER

Spoke with Patrick with regards to the testing of the Rip Rap and the Granular fill. Testing needs to be more clear as to what Golder will be doing for frequencies or if we are going to test at all.

8.0 EQUIPMENT ONSITE

JD tractor/disc, Volvo compactor smooth drum, 2 Komatsu 210 excavators, SAKAI compactor sheep's foot, JD excavator 270, Komatsu dozer 39EX, Vermeer wood chipper(removed from site 9/8/15), Komatsu excavator 228, JD skid steer 329E, EXTEC soil screener, Komatsu dozer GPS equipped(delivered 9/9/15), Off-road (delivered 9/8/15)

9.0 PHOTOGRAPHS



Woodchip pile borrow pit



Pipe east side of Area E



Potholes near lamp post east side Area E



Area on west side of PCB LF that will need to move east some for the limits of liner

FIELD MONITORING REPORT

Project No.:	1302962.CQA	**Project Title:**	OU-3 RA Cover Systems
Location:	Anniston, AL		
Owner:	Solutia, Inc.		
Contractor:	Taylor Corp.		

Date: Thursday, September 10, 2015

1.0 SITE CONDITIONS

Weather Condition:	Cloudy
Temperature:	67 - 85 °F
Precipitation:	None

2.0 HEALTH AND SAFETY

Issues:	Underground utilities

3.0 GOLDER PERSONNEL ON SITE

Name	Time on Site
Shawn Casey	0:845 **to** 16:30

4.0 SUMMARY OF ACTIVITIES

Location: Autoclave

No activity noted

Location: Area E

Continue to excavate trench east side of limits and mark encountered objects within the trench.

Spoke with Tom Collins regarding the utilities. Informed him that Taylor excavates trench until approx. 1330 and then backfills with DGA so it would be good for him to check out the lines before the trench gets filled in with the DGA material

Golder has inspected bottom of trench along the south and east limits while contractor excavates looking for soft areas. Everything so far has been firm.

Golder Associates Inc.
3730 Chamblee Tucker Road
Atlanta, GA 30341 USA
Tel: (770) 496-1893 Fax: (770) 934-9476 www.golder.com

Golder Associates: Operations in Africa, Asia, Australasia, Europe, North America and South America

Golder, Golder Associates and the GA globe design are trademarks of Golder Associates Corporation

Locations for BGS objects

Station	Object	Depth
3+67	Pipe	10”
3+53- 3+57	concrete	3.5” can be removed
3+28	electric	11” line broken
3+18	Pipe	10”
3+01	Electric	14”
2+85	3 electric lines	14”

Location: PCB Cells

Removed wood/stone debris from both the east and west limits

Location: CMT Borrow Area

Contractor spread out the wood chips and had fire department come to site to spray down the remaining coals from the fire

Installed head pipe to the outlet pipe of the drainage basin

Remove the rip rap from the check dam south of the basin. Golder informed Josh late yesterday the dam was installed incorrectly; there was no textile on the slopes.

Location: Groundwater Extraction System

No activity

5.0 DISCUSSIONS / MEETINGS

Personnel Involved:	NA
Location:	NA
Topics Covered:	NA

6.0 CQA TESTING PERFORMED ON-SITE

Location:	
Test:	

7.0 COMMENTS / ISSUES / OTHER

8.0 EQUIPMENT ONSITE

JD tractor/disc, Volvo compactor smooth drum, 2 Komatsu 210 excavators, SAKAI compactor sheep's foot, JD excavator 270, Komatsu dozer 39EX, Vermeer wood chipper(removed from site 9/8/15), Komatsu excavator 228, JD skid steer 329E, EXTEC soil screener, Komatsu dozer GPS equipped(delivered 9/9/15), Off-road (delivered 9/8/15)

9.0 PHOTOGRAPHS



Check dam installed south of basin,
contractor will modify to add geotextile on slopes



Emergency spillway, CMT Borrow Area



Exposed an old sewage line, Area E



Fire department spraying down the remaining coals from the wood chip fire



Screen moved to SW corner of borrow pit



Placing DGA in trench along east limits Area E

FIELD MONITORING REPORT

Project No.:	1302962.CQA	**Project Title:**	OU-3 RA Cover Systems
Location:	Anniston, AL		
Owner:	Solutia, Inc.		
Contractor:	Taylor Corp.		

Date: Friday, September 11, 2015

1.0 SITE CONDITIONS

Weather Condition:	Partly cloudy
Temperature:	71 – 85 °F
Precipitation:	None

2.0 HEALTH AND SAFETY

Issues:	Very foggy this morning watch for cars crossing HWY

3.0 GOLDER PERSONNEL ON SITE

Name	Time on Site
Shawn Casey	0615 **to** 16:30

4.0 SUMMARY OF ACTIVITIES

Location: Autoclave

No activity noted

Location: Area E

Continue to excavate trench east side and north limits of limits and mark encountered objects within the trench.

Spoke with Concrete contractor regarding pipes that will be at the footer elevation for the wall. He suggested wrapping the pipe in a material like Styrofoam to protect the piping but ultimately wants direction from the engineer

Spoke with Josh late morning asked if he could get Taylor to stop covering the pipes with DGA in case they need to be dug out for prep of the concrete. Not a big job to cover the piping at a later time

Golder Associates Inc.
3730 Chamblee Tucker Road
Atlanta, GA 30341 USA
Tel: (770) 496-1893 Fax: (770) 934-9476 www.golder.com

Golder Associates: Operations in Africa, Asia, Australasia, Europe, North America and South America

Golder, Golder Associates and the GA globe design are trademarks of Golder Associates Corporation

Spoke with Tom Collins about the concrete that STA 3+57 only 3.5" below side walk. He is confident it is just an old walk way that went to the old building No.28

1500 contractor started along the N limits working E to W stopped at STA 1+77. Excavated approx. 75ft today

Locations for BGS objects

Station	Object	Depth
2+62	2 electric pipes	9"
2+40	2 electric pipes	7"
2+38	electric pipe	10.5"
2+21	2 electrical	2.5'

Location: PCB Cells

Disc up the west side of site between entrance and exit for clean fill

Started bringing in soil at the south entrance

Stop bringing soil to PCB cells at 14:30

Delivered 16 loads of clean fill today

Location: CMT Borrow Area

Wood chip fire basically out. Couple of small areas with a little smoke

0830 loaded first truck through the screen for the PCB area. Contractor then needed to work on the screen for approx. 2 hrs as none of the bolts holding the screen in place were tightened down

Continue to screen and bring soil to the PCB area

1300 off road truck got a flat so down to one truck hauling soil to PCB area

Stopped hauling soil at 14:30

Location: Groundwater Extraction System

No activity

5.0 DISCUSSIONS / MEETINGS

Personnel Involved:	Robert Brown/ Ellis/ Donn/Jos and myself
Location:	Area E
Topics Covered:	Concrete work

6.0 CQA TESTING PERFORMED ON-SITE

Location:	
Test:	

7.0 COMMENTS / ISSUES / OTHER

None

8.0 EQUIPMENT ONSITE

JD tractor/disc, Volvo compactor smooth drum, 2 Komatsu 210 excavators, SAKAI compactor sheep's foot, JD excavator 270, Komatsu dozer 39EX, Vermeer wood chipper(removed from site 9/8/15), Komatsu excavator 228, JD skid steer 329E, EXTEC soil screener, Komatsu dozer GPS equipped(delivered 9/9/15), Off-road (delivered 9/8/15)

9.0 PHOTOGRAPHS



CMT Borrow Area



1st truck load of screened material



Placing soil south entrance PCB area



Disking PCB area prior to placement of clean fill



Started excavating N limits of Area E



Rock pile from 16 truckloads of screening

FIELD MONITORING REPORT

Project No.:	1302962.CQA	**Project Title:**	OU-3 RA Cover Systems
Location:	Anniston, AL		
Owner:	Solutia, Inc.		
Contractor:	Taylor Corp.		

Date: Monday, September 14, 2015

1.0 SITE CONDITIONS

Weather Condition:	Clear
Temperature:	58 – 81 °F
Precipitation:	None

2.0 HEALTH AND SAFETY

Issues:	Cooler weather stay hydrated

3.0 GOLDER PERSONNEL ON SITE

Name	Time on Site
Shawn Casey	0730 **to** 17:30

4.0 SUMMARY OF ACTIVITIES

Location: Autoclave

No activity noted

Location: Area E

Continue to excavate trench and mark encountered objects within the trench; north limits of Area E. Also pothole a few areas in the NW corner

Switched out 2 roll offs for a total of 4 being filled so far

Locations for BGS objects

Station	Object	Depth
1+23	iron pipe not used	11”

Golder Associates Inc.
3730 Chamblee Tucker Road
Atlanta, GA 30341 USA
Tel: (770) 496-1893 Fax: (770) 934-9476 www.golder.com

Golder Associates: Operations in Africa, Asia, Australasia, Europe, North America and South America

Golder, Golder Associates and the GA globe design are trademarks of Golder Associates Corporation

0+76	metal pipe	14”
0+72	Cable	8-9”
0+70	Pipe	8”

Location: PCB Cells

Continue to place clean fill SW corner of PCB area.

3 trucks dumping sub-grade fill

Total of 50 loads for the day

2 trucks loads of liner expected to be delivered 9/15/15 and 9/16/15

Location: CMT Borrow Area

Continue to screen soil to be placed in the PCB area

Informed contractor in the afternoon the area was very dusty and the that water truck needed to be used

Installed hay matting on the outside slope of basin. Inside of basin needs to be done along with the rest of the erosion controls

Location: Groundwater Extraction System

No activity

5.0 DISCUSSIONS / MEETINGS

Personnel Involved:	S. Casey (Golder) and D. Williams (Solutia)
Location:	
Topics Covered:	Contractor would like to pile the screened rock west of the western diversion dike.

6.0 CQA TESTING PERFORMED ON-SITE

Location:	PCB area
Test:	Collected soil sample at the south entrance. 6 inch clean fill sub-grade

7.0 COMMENTS / ISSUES / OTHER

None

8.0 EQUIPMENT ONSITE

JD tractor/disc, Volvo compactor smooth drum, 2 Komatsu 210 excavators, SAKAI compactor sheep's foot, JD excavator 270, Komatsu dozer 39EX, Vermeer wood chipper(removed from site 9/8/15), Komatsu excavator 228, JD skid steer 329E, EXTEC soil screener, Komatsu dozer GPS equipped(delivered 9/9/15), Off-road (delivered 9/8/15). Loader delivered to Borrow pit 9/14/15

9.0 PHOTOGRAPHS



Fencing removed NW corner Area E



Screening soil



Straw matting on basin slopes



PCB sub-grade soil placement

FIELD MONITORING REPORT

Project No.:	1302962.CQA	**Project Title:**	OU-3 RA Cover Systems
Location:	Anniston, AL		
Owner:	Solutia, Inc.		
Contractor:	Taylor Corp.		

Date: Tuesday, September 15, 2015

1.0 SITE CONDITIONS

Weather Condition:	Partly Cloudy
Temperature:	59 – 83 °F
Precipitation:	None

2.0 HEALTH AND SAFETY

Issues:	Dust control Borrow Pit/ PCB area 12 men onsite

3.0 GOLDER PERSONNEL ON SITE

Name	Time on Site
Shawn Casey	0630 **to** 17:30

4.0 SUMMARY OF ACTIVITIES

Location: Autoclave

No activity noted

Location: Area E

Continue to excavate trench west limits and mark encountered objects within the trench.

There is an electric conduit line that runs just below the surface that needs to be lowered. Taylor was informed of this by Steve and an electrician has been called.

Locations for BGS objects

Station	Object	Depth
0+65 to 0+10	conduit line to be lowered	surface to 8”
0+00	pipe	10”-11”

Golder Associates Inc.
3730 Chamblee Tucker Road
Atlanta, GA 30341 USA
Tel: (770) 496-1893 Fax: (770) 934-9476 www.golder.com

Golder Associates: Operations in Africa, Asia, Australasia, Europe, North America and South America

Golder, Golder Associates and the GA globe design are trademarks of Golder Associates Corporation

Location: PCB Cells

Continue to place clean fill SW corner of PCB area.

2 trucks dumping sub-grade fill, total of 32 loads

5 trucks to deliver liner/extrusion weld material scheduled for tomorrow

Location: CMT Borrow Area

Continue to screen soil to be placed in the PCB area

Also SW corner of diversion berm is going to be looked at by Steve. Likely need some stone in there to allow water to flow to the north. High point on south limits to a lower point on the berm

Erosion controls still not fully in place at the basin (east check dam and matting), also along the south and east limits with the rip rap

Location: Groundwater Extraction System

No activity

5.0 DISCUSSIONS / MEETINGS

Personnel Involved:	Steve/Shawn
Location:	Area E/ borrow pit/ PCB area
Topics Covered:	Trench/piping in trench, erosion controls/ east side limits of liner

6.0 CQA TESTING PERFORMED ON-SITE

Location:	PCB area
Test:	Density test just west of the south entrance, failed moisture

7.0 COMMENTS / ISSUES / OTHER

8.0 EQUIPMENT ONSITE

JD tractor/disc, Volvo compactor smooth drum, 2 Komatsu 210 excavators, SAKAI compactor sheep's foot, JD excavator 270, Komatsu dozer 39EX, Vermeer wood chipper(removed from site 9/8/15), Komatsu excavator 228, JD skid steer 329E, EXTEC soil screener, Komatsu dozer GPS equipped(delivered 9/9/15), Off-road (delivered 9/8/15). Loader delivered to Borrow pit 9/14/15

9.0 PHOTOGRAPHS



Installing concrete culvert exit road from PCB area



Rock screen from 66 loads of clean fill



Clean soil sub-grade placement west side of PCB area



Conduit line from NW corner running along west limits approximately 50’ south

FIELD MONITORING REPORT

Project No.:	1302962.CQA	**Project Title:**	OU-3 RA Cover Systems
Location:	Anniston, AL		
Owner:	Solutia, Inc.		
Contractor:	Taylor Corp.		

Date: Wednesday, September 16, 2015

1.0 SITE CONDITIONS

Weather Condition:	Partly Cloudy
Temperature:	61 – 88 °F
Precipitation:	None

2.0 HEALTH AND SAFETY

Issues:	Be aware of surroundings/12 men onsite

3.0 GOLDER PERSONNEL ON SITE

Name	Time on Site
Shawn Casey	0625 to 1625

4.0 SUMMARY OF ACTIVITIES

Location: Autoclave

No activity noted

Location: Area E

Continue to excavate trench west limits and mark encountered objects within the trench. Stopped at 6+40

Contractor shoveled off the soil to the curb NE corner. Also installed SCH 80 around the iron pipe that goes through the footer STA 3+69

Robbie Brown Concrete laying out the boards for the footer along south and west

Bridged 2 areas where the electrical piping would be bottom of footer STA 2+40 and 2+62. Also added foam protector in all 3 areas to fill the sleeve/bridging

Golder Associates Inc.
3730 Chamblee Tucker Road
Atlanta, GA 30341 USA
Tel: (770) 496-1893 Fax: (770) 934-9476 www.golder.com

Golder Associates: Operations in Africa, Asia, Australasia, Europe, North America and South America

Golder, Golder Associates and the GA globe design are trademarks of Golder Associates Corporation

Saw cut the pavement along NW/west limits.

Chop saw the concrete at STA 3+53

Late afternoon unloaded 10 rolls of liner AREA E.

Location: PCB Cells

Continue to place clean fill SW corner of PCB area.

2 trucks/ 1 Off-road dumping sub-grade fill

2 trucks of liner delivered to the PCB laydown area. Total of 17 rolls and 1200 ft of Polylock

Location: CMT Borrow Area

Continue to screen soil to be placed in the PCB area

Screen broke down early afternoon. Contractor started building bench south of the NE corner of drainage basin for screen/elevations

Placing oversized stone west of the western diversion berm

Location: Groundwater Extraction System

No activity

5.0 DISCUSSIONS / MEETINGS

Personnel Involved:	NA
Location:	NA
Topics Covered:	NA

6.0 CQA TESTING PERFORMED ON-SITE

Location:	NA
Test:	NA

7.0 COMMENTS / ISSUES / OTHER

Total liner delivered to site 9/16/15= 27 rolls

8.0 EQUIPMENT ONSITE

JD tractor/disc, Volvo compactor smooth drum, 2 Komatsu 210 excavators, SAKAI compactor sheep's foot, JD excavator 270, Komatsu dozer 39EX, Vermeer wood chipper(removed from site 9/8/15),

Komatsu excavator 228, JD skid steer 329E, EXTEC soil screener, Komatsu dozer GPS equipped(delivered 9/9/15), Off-road (delivered 9/8/15). Loader delivered to Borrow pit 9/14/15

9.0 PHOTOGRAPHS



Continue trenching along west limits Area E



Liner staged for PCB Cells; 17 rolls so far



Subgrade preparation; west limits of PCB Cells



Oversized rock placed west of western diversion swale



10 rolls of liner staged at Area E



Bridged pipe; NE corner of Area E



East side of Area E



Pavement cut along west limits of Area E

FIELD MONITORING REPORT

Project No.:	1302962.CQA	**Project Title:**	OU-3 RA Cover Systems
Location:	Anniston, AL		
Owner:	Solutia, Inc.		
Contractor:	Taylor Corp.		

Date: Thursday, September 17, 2015

1.0 SITE CONDITIONS

Weather Condition:	Cloudy
Temperature:	61 – 81 °F
Precipitation:	None

2.0 HEALTH AND SAFETY

Issues:	Wear required PPE / 10 men onsite

3.0 GOLDER PERSONNEL ON SITE

Name	Time on Site
Shawn Casey	0615 to 1625

4.0 SUMMARY OF ACTIVITIES

Location: Autoclave

No activity noted

Location: Area E

Continue to excavate trench west limits and mark encountered objects within the trench. Stopped excavation at 5+54

Acker Electrical onsite to do a cost estimate for relocation of line along west limits. Line is a coaxial cable

4 rolls of liner unloaded at Area E for a total 0f 14

Concrete contractor building forms along east limits and north limits for footers. I checked the width in numerous areas and 18” was the norm

Golder Associates Inc.
3730 Chamblee Tucker Road
Atlanta, GA 30341 USA
Tel: (770) 496-1893 Fax: (770) 934-9476 www.golder.com

Golder Associates: Operations in Africa, Asia, Australasia, Europe, North America and South America

Golder, Golder Associates and the GA globe design are trademarks of Golder Associates Corporation

Golder had contractor place a bridge over pipe at STA 3+87 because it was not 2" below the DGA

Locations for bridged/sleeve objects

Station	Object	Bridge/sleeve
3+87	pipe	Bridge
2+40	electrical	Bridge
2+62	electrical	Bridge
3+85	pipe	Sleeve

Location: PCB Cells

Placed 2 loads of soil today in the PCB area

Unloaded 7 rolls of liner for a total of 24 staged at the PCB area

Location: CMT Borrow Area

Screen broke down - needs a new belt. Contractor tried to repair the belt but only got 2 loads before the belt broke again

Contractor having rip rap delivered to site and working on the east rip rap swale

Contractor had belt replaced at 1500 on screener

Location: Groundwater Extraction System

No activity

5.0 DISCUSSIONS / MEETINGS

Personnel Involved:	Donn/Shawn
Location:	Area E
Topics Covered:	Discussed extra reinforcement for footers where pipes are sleeved/bridged

6.0 CQA TESTING PERFORMED ON-SITE

Location:	PCB Area
Test:	Conducted a sample nuke test, not recorded

7.0 COMMENTS / ISSUES / OTHER

Total liner delivered to site 9/117/15= 38 rolls

Roll 108183107 was delivered to site instead of 108183102. Roll ending in 107 falls within the conformance testing as roll ending in 104 was tested. Currently no need to collect sample for roll 107

8.0 EQUIPMENT ONSITE

JD tractor/disc, Volvo compactor smooth drum, 2 Komatsu 210 excavators, SAKAI compactor sheep's foot, JD excavator 270, Komatsu dozer 39EX, Vermeer wood chipper(removed from site 9/8/15), Komatsu excavator 228, JD skid steer 329E, EXTEC soil screener, Komatsu dozer GPS equipped(delivered 9/9/15), Off-road (delivered 9/8/15). Loader delivered to Borrow pit 9/14/15

9.0 PHOTOGRAPHS



14 liner rolls staged at Area E



Building forms for footer; NW corner of Area E



Form for footer along east limits of Area E



NE corner of Area E



Building Rip Rap swale SE corner of borrow pit

FIELD MONITORING REPORT

Project No.:	1302962.CQA	**Project Title:**	OU-3 RA Cover Systems
Location:	Anniston, AL		
Owner:	Solutia, Inc.		
Contractor:	Taylor Corp.		

Date: Friday, September 18, 2015

1.0 SITE CONDITIONS

Weather Condition:	Nothing but blue sky
Temperature:	63 – 85 °F
Precipitation:	None

2.0 HEALTH AND SAFETY

Issues:	Housekeeping/11 men

3.0 GOLDER PERSONNEL ON SITE

Name	Time on Site
Shawn Casey	0615 to 1625

4.0 SUMMARY OF ACTIVITIES

Location: Autoclave

No activity noted

Location: Area E

Continue to excavate trench west limits and mark encountered objects within the trench. Stopped excavation at 5+54

Concrete contractor continuing to install forms along south, east, and north limits. Also installed brace along sidewalk for forms. Robbie Brown informed me that surveyor was supposed to be onsite early morning to shoot grades but as of 11am no surveyor

1230 Concrete contractor offsite

Taylor installed rebar at the pipe location for reinforcement as Donn wanted

Golder Associates Inc.
3730 Chamblee Tucker Road
Atlanta, GA 30341 USA
Tel: (770) 496-1893 Fax: (770) 934-9476 www.golder.com

Golder Associates: Operations in Africa, Asia, Australasia, Europe, North America and South America

Golder, Golder Associates and the GA globe design are trademarks of Golder Associates Corporation

Hand digging the sump area NW corner of Area E

Location: PCB Cells

Continue to haul in soil for sub-grade. 2 off road trucks bringing soil to west side of the site. Hauled in 51 loads for a total of 151 as of 9/18/15

Turner surveyors onsite shooting a TOPO and limits of the PCB area

Contractor has been watering soil in PCB area for most of the day. However they are not using the sheep's foot to drive the water into the soil

Location: CMT Borrow Area

Screen repaired late yesterday. Continue to screen and load trucks

Installed straw/seed in basin NW corner of the site

Location: Groundwater Extraction System

No activity

5.0 DISCUSSIONS / MEETINGS

Personnel Involved:	NA
Location:	NA
Topics Covered:	NA

6.0 CQA TESTING PERFORMED ON-SITE

Location:	PCB area
Test:	Performed nuke gauge test to check moisture, not recorded

7.0 COMMENTS / ISSUES / OTHER

None

8.0 EQUIPMENT ONSITE

JD tractor/disc, Volvo compactor smooth drum, 2 Komatsu 210 excavators, SAKAI compactor sheep's foot, JD excavator 270, Komatsu dozer 39EX, Vermeer wood chipper(removed from site 9/8/15), Komatsu excavator 228, JD skid steer 329E, EXTEC soil screener, Komatsu dozer GPS equipped(delivered 9/9/15), Off-road (delivered 9/8/15). Loader delivered to Borrow pit 9/14/15

9.0 PHOTOGRAPHS



Forms for footer Area E





Screening soil



Watering subgrade; west side of Area E



Seed/straw basin borrow source

FIELD MONITORING REPORT

Project No.:	1302962.CQA	**Project Title:**	OU-3 RA Cover Systems
Location:	Anniston, AL		
Owner:	Solutia, Inc.		
Contractor:	Taylor Corp.		

Date: Monday, September 21, 2015

1.0 SITE CONDITIONS

Weather Condition:	Cloudy
Temperature:	65 – 70 °F
Precipitation:	Off and on rain all day

2.0 HEALTH AND SAFETY

Issues:	Housekeeping/11 men

3.0 GOLDER PERSONNEL ON SITE

Name	Time on Site
Shawn Casey	0610 to 1625

4.0 SUMMARY OF ACTIVITIES

Location: Autoclave

No activity noted

Location: Area E

Concrete contractor onsite for 2hrs left because of the weather

Taylor finished excavating out the NW corner of site near sump.

Location: PCB Cells

Continue to haul in soil for sub-grade. 1 dump truck and 1 off road hauling sub-grade fill. Hauled in 25 loads for a total of 176 as of 9/21/15

Didn't get started hauling soil until mid- morning needed to work on the screen

Golder Associates Inc.
3730 Chamblee Tucker Road
Atlanta, GA 30341 USA
Tel: (770) 496-1893 Fax: (770) 934-9476 www.golder.com

Golder Associates: Operations in Africa, Asia, Australasia, Europe, North America and South America

Golder, Golder Associates and the GA globe design are trademarks of Golder Associates Corporation

Setting up the GPS on dozer this afternoon. Suspect material brought in so far is thick and will need to be pushed out

Location: Area A

Removed weather station

Contractor planning on grading the area near the gate that will get concrete on 9/22/15

Location: CMT Borrow Area

Screen needs repairs this morning. Started screening soil about mid-morning

Location: Groundwater Extraction System

No activity

5.0 DISCUSSIONS / MEETINGS

Personnel Involved:	NA
Location:	NA
Topics Covered:	NA

6.0 CQA TESTING PERFORMED ON-SITE

Location:	NA
Test:	NA

7.0 COMMENTS / ISSUES / OTHER

None

8.0 EQUIPMENT ONSITE

JD tractor/disc, Volvo compactor smooth drum, 2 Komatsu 210 excavators, SAKAI compactor sheep's foot, JD excavator 270, Komatsu dozer 39EX, Vermeer wood chipper(removed from site 9/8/15), Komatsu excavator 228, JD skid steer 329E, EXTEC soil screener, Komatsu dozer GPS equipped(delivered 9/9/15), Off-road (delivered 9/8/15). Loader delivered to Borrow pit 9/14/15

9.0 PHOTOGRAPHS



Removing weather station, Area A



Setting up GPS for dozer at PCB Cells



Grading out areas that are thick; PCB Cells west side of site

FIELD MONITORING REPORT

Project No.:	1302962.CQA	**Project Title:**	OU-3 RA Cover Systems
Location:	Anniston, AL		
Owner:	Solutia, Inc.		
Contractor:	Taylor Corp.		

Date: Tuesday, September 22, 2015

1.0 SITE CONDITIONS

Weather Condition:	Partly
Temperature:	65 – 85
Precipitation:	none

2.0 HEALTH AND SAFETY

Issues:	Thunderstorm. 12 men on site

3.0 GOLDER PERSONNEL ON SITE

Name	Time on Site
Shawn Casey	0610 to 1730

4.0 SUMMARY OF ACTIVITIES

Location: Autoclave

No activity noted

Location: Area E

Concrete contractor onsite continuing with forms along the south and east limits. Contactor installing plywood for the wall height. Steve onsite today met with the contractor he feels confident they know what to do.

Location: PCB Cells

Continue to haul in soil for sub-grade. 2 off-road trucks hauling fill to SW corner of site working east. Hauled in 38 loads for a total of 214 as of 9/22/15

Golder Associates Inc.
3730 Chamblee Tucker Road
Atlanta, GA 30341 USA
Tel: (770) 496-1893 Fax: (770) 934-9476 www.golder.com

Golder Associates: Operations in Africa, Asia, Australasia, Europe, North America and South America

Golder, Golder Associates and the GA globe design are trademarks of Golder Associates Corporation

Golder performed density testing nuke gauge/ drive cylinder. Performed a nuke test then a cylinder test to compare if the numbers were close to one another. Nuke gauge was showing lower moisture than actual moisture test done in the microwave.

Location: Area A

Taylor started to grade the area near the main gate that is to have concrete. Contractor trying to limit the amount of material that would need to be disposed of

Location: CMT Borrow Area

Continue to screen soil and load trucks for the PCB sub-grade

Location: Groundwater Extraction System

No activity

5.0 DISCUSSIONS / MEETINGS

Personnel Involved:	NA
Location:	NA
Topics Covered:	NA

6.0 CQA TESTING PERFORMED ON-SITE

Location:	PCB Area
Test:	Nuke gauge/ drive cylinder for density

7.0 COMMENTS / ISSUES / OTHER

None

8.0 EQUIPMENT ONSITE

JD tractor/disc, Volvo compactor smooth drum, 2 Komatsu 210 excavators, SAKAI compactor sheep's foot, JD excavator 270 (removed 9/22/15), Komatsu dozer 39EX, Vermeer wood chipper (removed from site 9/8/15), Komatsu excavator 228, JD skid steer 329E, EXTEC soil screener, Komatsu dozer GPS equipped (delivered 9/9/15), Off-road (delivered 9/8/15). Loader delivered to Borrow pit 9/14/15

9.0 PHOTOGRAPHS



Prepping for fine grading of Area A for concrete



Compacting/disc surface for subgrade soil; PCB Cells



Forms on south side of Area E



Started pulling back rock in preparation of concrete, Area A

FIELD MONITORING REPORT

Project No.:	1302962.CQA	**Project Title:**	OU-3 RA Cover Systems
Location:	Anniston, AL		
Owner:	Solutia, Inc.		
Contractor:	Taylor Corp.		

Date: Wednesday, September 23, 2015

1.0 SITE CONDITIONS

Weather Condition:	Partly Cloudy
Temperature:	63 – 83
Precipitation:	none

2.0 HEALTH AND SAFETY

Issues:	Thunderstorm, 12 men on site

3.0 GOLDER PERSONNEL ON SITE

Name	Time on Site
Shawn Casey	0610 to 1730

4.0 SUMMARY OF ACTIVITIES

Location: Autoclave

No activity noted

Location: Area E

Concrete contractor onsite continuing with forms along the east and north limits to STA 1+50. Contactor currently installing plywood forms for the wall height.

Taylor excavated the trench for footer along the NW side of Area E after the conduit was lowered by Acker Electrical early morning. The line was lowered to 1ft BGS/excavated by Taylor then 4in of DGA placed over it at STA 0+65 thru STA 0+10

Golder Associates Inc.
3730 Chamblee Tucker Road
Atlanta, GA 30341 USA
Tel: (770) 496-1893 Fax: (770) 934-9476 www.golder.com

Golder Associates: Operations in Africa, Asia, Australasia, Europe, North America and South America

Golder, Golder Associates and the GA globe design are trademarks of Golder Associates Corporation

Location: PCB Cells

Continue to haul in soil for sub-grade working west to east. 2 off-road trucks hauling in fill. 43 loads for a total of 297.

Patrick and I performed one nuke and drive cylinder test today north side of the site near NW corner.

Location: Area A

Taylor continuing to grade the location near the main gate that is to have concrete. Contractor is limiting the amount of material that would need to be disposed of.

Location: CMT Borrow Area

Continue to screen soil and load trucks for the PCB sub-grade

Location: Groundwater Extraction System

No activity

5.0 DISCUSSIONS / MEETINGS

Personnel Involved:	Donn/John/Thomas/Patrick/Shawn
Location:	Borrow Pit
Topics Covered:	Discussed placing rock approx. 2ft thick along bottom of borrow pit floor

6.0 CQA TESTING PERFORMED ON-SITE

Location:	PCB Area
Test:	Nuke gauge/ drive cylinder for density/collect soil sample CMT-2 PCB area

7.0 COMMENTS / ISSUES / OTHER

None

8.0 EQUIPMENT ONSITE

JD tractor/disc, Volvo compactor smooth drum, 2 Komatsu 210 excavators, SAKAI compactor sheep's foot, JD excavator 270 (removed 9/22/15), Komatsu dozer 39EX, Vermeer wood chipper (removed from site 9/8/15), Komatsu excavator 228, JD skid steer 329E, EXTEC soil screener, Komatsu dozer GPS equipped (delivered 9/9/15), Off-road (delivered 9/8/15). Loader delivered to Borrow pit 9/14/15

9.0 PHOTOGRAPHS



Continuing form work; east side of Area E



Conduit lowered along west limits of Area E, excavating trench for footer



West limits of Area E; conduit covered with DGA



Lightly grading out Area A near entrance gate for concrete



Grass starting to grow outside berm of borrow pit basin



Screening soil for sub-grade PCB area



Collected CMT-2 sample for proctor/particle size and moisture



Form for concrete wall NE corner of Area E

FIELD MONITORING REPORT

Project No.:	1302962.CQA	**Project Title:**	OU-3 RA Cover Systems
Location:	Anniston, AL		
Owner:	Solutia, Inc.		
Contractor:	Taylor Corp.		

Date: Friday, September 25, 2015

1.0 SITE CONDITIONS

Weather Condition:	Cloudy with rain
Temperature:	63 – 70
Precipitation:	none

2.0 HEALTH AND SAFETY

Issues:	Because of rain contractor did safety class with their crews all day

3.0 GOLDER PERSONNEL ON SITE

Name	Time on Site
Shawn Casey	0610 to 1315

4.0 SUMMARY OF ACTIVITIES

Location: Autoclave

No activity noted

Location: Area E

No activity

Location: PCB Cells

No activity

Location: Area A

No activity

Golder Associates Inc.
3730 Chamblee Tucker Road
Atlanta, GA 30341 USA
Tel: (770) 496-1893 Fax: (770) 934-9476 www.golder.com

Golder Associates: Operations in Africa, Asia, Australasia, Europe, North America and South America

Golder, Golder Associates and the GA globe design are trademarks of Golder Associates Corporation

Location: CMT Borrow Area

Greased equipment

Location: Groundwater Extraction System

No activity

5.0 DISCUSSIONS / MEETINGS

Personnel Involved:	NA
Location:	NA
Topics Covered:	NA

6.0 CQA TESTING PERFORMED ON-SITE

Location:	NA
Test:	NA

7.0 COMMENTS / ISSUES / OTHER

None

8.0 EQUIPMENT ONSITE

JD tractor/disc, Volvo compactor smooth drum, 2 Komatsu 210 excavators, SAKAI compactor sheep's foot, JD excavator 270 (removed 9/22/15), Komatsu dozer 39EX, Vermeer wood chipper (removed from site 9/8/15), Komatsu excavator 228, JD skid steer 329E, EXTEC soil screener, Komatsu dozer GPS equipped (delivered 9/9/15), Off-road (delivered 9/8/15). Loader delivered to Borrow pit 9/14/15

9.0 PHOTOGRAPHS

None

FIELD MONITORING REPORT

Project No.:	1302962.CQA	**Project Title:**	OU-3 RA Cover Systems
Location:	Anniston, AL		
Owner:	Solutia, Inc.		
Contractor:	Taylor Corp.		

Date: Saturday, September 26, 2015

1.0 SITE CONDITIONS

Weather Condition:	Overcast with mist
Temperature:	67– 78
Precipitation:	0.3in 9/25/15

2.0 HEALTH AND SAFETY

Issues:	Slippery conditions in the borrow pit and PCB area

3.0 GOLDER PERSONNEL ON SITE

Name	Time on Site
Shawn Casey	0610 to 1600

4.0 SUMMARY OF ACTIVITIES

Location: Autoclave

No activity noted

Location: Area E

No activity

Location: PCB Cells

Hauling in sub-grade material concentrating on placing soil on the southern half of the site east of the south entrance

56 loads for a total of 353 as of 9/26/2015

Location: Area A

Golder Associates Inc.
3730 Chamblee Tucker Road
Atlanta, GA 30341 USA
Tel: (770) 496-1893 Fax: (770) 934-9476 www.golder.com

Golder Associates: Operations in Africa, Asia, Australasia, Europe, North America and South America

Golder, Golder Associates and the GA globe design are trademarks of Golder Associates Corporation

No activity

Location: CMT Borrow Area

Screening soil and grading borrow pit floor to finish grades NE and south of basin

Location: Groundwater Extraction System

No activity

5.0 DISCUSSIONS / MEETINGS

Personnel Involved:	NA
Location:	NA
Topics Covered:	NA

6.0 CQA TESTING PERFORMED ON-SITE

Location:	NA
Test:	NA

7.0 COMMENTS / ISSUES / OTHER

None

8.0 EQUIPMENT ONSITE

JD tractor/disc, Volvo compactor smooth drum, 2 Komatsu 210 excavators, SAKAI compactor sheep's foot, JD excavator 270(removed 9/22/15), Komatsu dozer 39EX, Vermeer wood chipper (removed from site 9/8/15), Komatsu excavator 228, JD skid steer 329E, EXTEC soil screener, Komatsu dozer GPS equipped (delivered 9/9/15), Off-road (delivered 9/8/15). Loader delivered to Borrow pit 9/14/15

9.0 PHOTOGRAPHS



Grading floor of borrow pit SE of basin



Placing sub-grade PCB Cells

FIELD MONITORING REPORT

Project No.:	1302962.CQA	**Project Title:**	OU-3 RA Cover Systems
Location:	Anniston, AL		
Owner:	Solutia, Inc.		
Contractor:	Taylor Corp.		

Date: Monday, September 28, 2015

1.0 SITE CONDITIONS

Weather Condition:	Cloudy with rain
Temperature:	67– 78
Precipitation:	0.3in

2.0 HEALTH AND SAFETY

Issues:	Slippery conditions in the borrow pit and PCB area

3.0 GOLDER PERSONNEL ON SITE

Name	Time on Site
Shawn Casey	0610 to 1500

4.0 SUMMARY OF ACTIVITIES

Location: Autoclave

No activity noted

Location: Area E

Concrete contractor working on form along north limits. Left site mid- morning because of the weather

Location: PCB Cells

Hauling in sub-grade material concentrating on placing soil on the southern half of the site east of the south entrance

Crew left site @1030 because of the weather

22 loads for a total of 381

Golder Associates Inc.
3730 Chamblee Tucker Road
Atlanta, GA 30341 USA
Tel: (770) 496-1893 Fax: (770) 934-9476 www.golder.com

Golder Associates: Operations in Africa, Asia, Australasia, Europe, North America and South America

Golder, Golder Associates and the GA globe design are trademarks of Golder Associates Corporation

Location: Area A

No activity

Location: CMT Borrow Area

Continue screening soil for PCB sub-grade

Installing rip rap swale south limits working east to west from SE corner

Location: Groundwater Extraction System

No activity

5.0 DISCUSSIONS / MEETINGS

Personnel Involved:	NA
Location:	NA
Topics Covered:	NA

6.0 CQA TESTING PERFORMED ON-SITE

Location:	PCB area
Test:	Moisture content and collect sample for particle size

7.0 COMMENTS / ISSUES / OTHER

None

8.0 EQUIPMENT ONSITE

JD tractor/disc, Volvo compactor smooth drum, 2 Komatsu 210 excavators, SAKAI compactor sheep's foot, JD excavator 270(removed 9/22/15), Komatsu dozer 39EX, Vermeer wood chipper(removed from site 9/8/15), Komatsu excavator 228, JD skid steer 329E, EXTEC soil screener, Komatsu dozer GPS equipped(delivered 9/9/15), Off-road (delivered 9/8/15). Loader delivered to Borrow pit 9/14/15

9.0 PHOTOGRAPHS



Continue form work, north limits of Area E



Rock pile within the CMT borrow pit



Rip rap swale installed along south limits of borrow pit



Continuing sub-grade placement at PCB Cells

FIELD MONITORING REPORT

Project No.:	1302962.CQA	**Project Title:**	OU-3 RA Cover Systems
Location:	Anniston, AL		
Owner:	Solutia, Inc.		
Contractor:	Taylor Corp.		

Date: Thursday, October 1, 2015

1.0 SITE CONDITIONS

Weather Condition:	Cloudy with mist
Temperature:	69-60
Precipitation:	0.0

2.0 HEALTH AND SAFETY

Issues:	

3.0 GOLDER PERSONNEL ON SITE

Name	Time on Site
Shawn Casey	0615 to

4.0 SUMMARY OF ACTIVITIES

Location: Autoclave

No activity noted

Location: Area E

5 men with Robbie brown concrete company continuing to build forms east and north limits of area E also installed water stop and started to tie rebar

Patrick took elevation shots for the footer along west limits. Couple of places the DGA needs to be lowered

Did some measuring of the rebar along south limits, the rebar will be located 3in below top of footer. According to Robbie this was discussed with Steve

Golder Associates Inc.
3730 Chamblee Tucker Road
Atlanta, GA 30341 USA
Tel: (770) 496-1893 Fax: (770) 934-9476 www.golder.com

Golder Associates: Operations in Africa, Asia, Australasia, Europe, North America and South America

Golder, Golder Associates and the GA globe design are trademarks of Golder Associates Corporation

Location: PCB Cells

Continue to haul in fill along south side of site east of south gate entrance. Contractor almost to the east side of the site south half with sub-grade

Contractor performed 38 depth checks in the PCB area today with Golder and Josh (PM) witnessing the test. Results are attached along with this email

Golder also performed 3 density test (PCB 5-7). The results along with the locations are also attached to the email.

Test PCB4-6 have passed the other test are low in moisture with the exception of PCB3 which failed both. PCB-6 is not on the drawing but was west of PCB-5 will get it on the drawing tomorrow.

45 loads 9/30/15 for a total of 429 (there were 9 loads that got missed in the math on 9/17/15 that didn't get added in)

Spoke with contractor about getting sub-grade to the limits SE corner

Location: Area A

No activity

Location: CMT Borrow Area

Screening soil for sub-grade material PCB area

Moving topsoil from borrow source to staging area under power lines

Location: Groundwater Extraction System

No activity

5.0 DISCUSSIONS / MEETINGS

Personnel Involved:	
Location:	
Topics Covered:	

6.0 CQA TESTING PERFORMED ON-SITE

Location:	PCB area
Test:	38 depth checks PCB area attached with location to email

7.0 COMMENTS / ISSUES / OTHER

Total liner delivered to site 9/17/15= 38 rolls

Roll 108183107 was delivered to site instead of 108183102. Roll ending in 107 falls within the conformance testing as roll ending in 104 was tested. Currently no need to collect sample for roll 107

8.0 EQUIPMENT ONSITE

JD tractor/disc, Volvo compactor smooth drum, 2 Komatsu 210 excavators, SAKAI compactor sheep's foot, JD excavator 270(removed 9/22/15), Komatsu dozer 39EX, Vermeer wood chipper(removed from site 9/8/15), Komatsu excavator 228, JD skid steer 329E, EXTEC soil screener, Komatsu dozer GPS equipped(delivered 9/9/15), Off-road (delivered 9/8/15). Loader delivered to Borrow pit 9/14/15

9.0 PHOTOGRAPHS



Forming Area E north limits



Depth checks PCB area



Installing water stop



Chamfer installed



Topsoil pile in borrow source being moved to staging area

FIELD MONITORING REPORT

Project No.:	1302962.CQA	**Project Title:**	OU-3 RA Cover Systems
Location:	Anniston, AL		
Owner:	Solutia, Inc.		
Contractor:	Taylor Corp.		

Date: Friday, October 2, 2015

1.0 SITE CONDITIONS

Weather Condition:	Cloudy with some rain
Temperature:	69-60
Precipitation:	0.3

2.0 HEALTH AND SAFETY

Issues:	

3.0 GOLDER PERSONNEL ON SITE

Name	Time on Site
Shawn Casey	0615 to 1430

4.0 SUMMARY OF ACTIVITIES

Location: Autoclave

No activity noted

Location: Area E

5 men with Robbie brown concrete company continuing to build forms east and north limits of area E also continue to tie rebar

Was informed they would be pouring the south, east and portion of north limits footer on 10/6/15

Location: PCB Cells

45 loads 9/30/15 for a total of 429 (there were 9 loads that got missed in the math on 9/17/15 that didn't get added in)

Golder Associates Inc.
3730 Chamblee Tucker Road
Atlanta, GA 30341 USA
Tel: (770) 496-1893 Fax: (770) 934-9476 www.golder.com

Golder Associates: Operations in Africa, Asia, Australasia, Europe, North America and South America

Golder, Golder Associates and the GA globe design are trademarks of Golder Associates Corporation

Installed the bridge on east side of site. Textile/rock then DGA. Was asked by Donn if the DGA was considered prepared sub-grade. I am formed Donn I would like to see some sand from the borrow source covering the DGA because of some of the rock in the DGA

Location: Area A

No activity

Location: CMT Borrow Area

Moving topsoil from borrow source to staging area under power lines

To wet to run soil to PCB area so no screening today

Location: Groundwater Extraction System

No activity

5.0 DISCUSSIONS / MEETINGS

Personnel Involved:	
Location:	
Topics Covered:	

6.0 CQA TESTING PERFORMED ON-SITE

Location:	
Test:	

7.0 COMMENTS / ISSUES / OTHER

Total liner delivered to site 9/17/15= 38 rolls

Roll 108183107 was delivered to site instead of 108183102. Roll ending in 107 falls within the conformance testing as roll ending in 104 was tested. Currently no need to collect sample for roll 107

8.0 EQUIPMENT ONSITE

JD tractor/disc, Volvo compactor smooth drum, 2 Komatsu 210 excavators, SAKAI compactor sheep's foot, JD excavator 270(removed 9/22/15), Komatsu dozer 39EX, Vermeer wood chipper(removed from site 9/8/15), Komatsu excavator 228, JD skid steer 329E, EXTEC soil screener, Komatsu dozer GPS equipped(delivered 9/9/15), Off-road (delivered 9/8/15). Loader delivered to Borrow pit 9/14/15

9.0 PHOTOGRAPHS



Area E rebar being installed



Topsoil being staged from the borrow source



Rebar installed along east limits



Showing the 12in offset on footer rebar



East limits area E



Water stop along east limits area E



Rebar Area E



Installing bridge east side of PCB



SE corner of PCB area reworked to get out to the limits

FIELD MONITORING REPORT

Project No.:	1302962.CQA	**Project Title:**	OU-3 RA Cover Systems
Location:	Anniston, AL		
Owner:	Solutia, Inc.		
Contractor:	Taylor Corp.		

Date: Monday, October 5, 2015

1.0 SITE CONDITIONS

Weather Condition:	Partly cloudy
Temperature:	66-80
Precipitation:	0.5 over the weeken

2.0 HEALTH AND SAFETY

Issues:	PPE

3.0 GOLDER PERSONNEL ON SITE

Name	Time on Site
Shawn Casey	0610 to 1700

4.0 SUMMARY OF ACTIVITIES

Location: Autoclave

No activity noted

Location: Area E

Contractor continuing to tie Rebar east, north limits of Area E. Steve noticed in my daily for 10/2/15 that the footer rebar was installed incorrectly. Steve came to site and it was decided that the footer rebar is to be set at 2in below the top of the footer and the wall rebar to be set at 1.5in below the top of the wall.

Donn, Ellis, Josh, Steve, Tony and myself present to go over what needs to be done for the footer rebar stated above

Location: PCB Cells

Golder Associates Inc.
3730 Chamblee Tucker Road
Atlanta, GA 30341 USA
Tel: (770) 496-1893 Fax: (770) 934-9476 www.golder.com

Golder Associates: Operations in Africa, Asia, Australasia, Europe, North America and South America

Golder, Golder Associates and the GA globe design are trademarks of Golder Associates Corporation

50 loads 10/01/15 for a total of 479 (there were 9 loads that got missed in the math on 9/17/15 that didn't get added in)

Continue to haul in sub-grade soil to PCB cell working along the North limits

Also installed the second bridging area middle of the site near the north limits

Location: Area A

No activity

Location: CMT Borrow Area

Screening soil and sending it to the PCB cells

Location: Groundwater Extraction System

The drums to be moved had alittle amount of water in the bottom likely b/c the lids were not tightened on and rain water possible got in. Josh Richards is onsite for GW sampling and said he would run the water through a carbon filter at the end of the week before they are disposed of in the roll off

5.0 DISCUSSIONS / MEETINGS

Personnel Involved:	See Area E
Location:	
Topics Covered:	

6.0 CQA TESTING PERFORMED ON-SITE

Location:	PCB cells
Test:	PCMC 2&3 collected and tested for moisture along with density test PCB-8 Samples will be sent back to Atlanta lab for particle size once Patrick goes back to the office later this week

7.0 COMMENTS / ISSUES / OTHER

8.0 EQUIPMENT ONSITE

JD tractor/disc, Volvo compactor smooth drum, 2 Komatsu 210 excavators, SAKAI compactor sheep's foot, JD excavator 270(removed 9/22/15), Komatsu dozer 39EX, Vermeer wood chipper(removed from site 9/8/15), Komatsu excavator 228, JD skid steer 329E, EXTEC soil screener, Komatsu dozer GPS equipped(delivered 9/9/15), Off-road (delivered 9/8/15). Loader delivered to Borrow pit 9/14/15

9.0 PHOTOGRAPHS



Ash from chip wood fire piled up



Rebar installed incorrectly



Welding water stop



Showing 2in offset for rebar installed for the wall



15ft offset on chamfer



Installing 2nd bridge PCB area



Rock pile borrow pit

FIELD MONITORING REPORT

Project No.:	1302962.CQA	**Project Title:**	OU-3 RA Cover Systems
Location:	Anniston, AL		
Owner:	Solutia, Inc.		
Contractor:	Taylor Corp.		

Date: Tuesday, October 6, 2015

1.0 SITE CONDITIONS

Weather Condition:	Partly cloudy
Temperature:	62-80
Precipitation:	none

2.0 HEALTH AND SAFETY

Issues:	Speed limit onsite 15mph

3.0 GOLDER PERSONNEL ON SITE

Name	Time on Site
Shawn Casey	0610 to 1700

4.0 SUMMARY OF ACTIVITIES

Location: Autoclave

No activity noted

Location: Area E

Contractor has 10 men onsite for concrete pour of the footer/6in part of the wall.

Contractor raising the rebar in the footer to the required 2/2.25in level below the top of the footer. Golder measured numerous areas along the south, east and northern limits. After inspection there were 3 areas that need to be raised and inch to a 1/2in. The SE and NE corners and an area near STA 3+75

Golder Associates Inc.
3730 Chamblee Tucker Road
Atlanta, GA 30341 USA
Tel: (770) 496-1893 Fax: (770) 934-9476 www.golder.com

Golder Associates: Operations in Africa, Asia, Australasia, Europe, North America and South America

Golder, Golder Associates and the GA globe design are trademarks of Golder Associates Corporation

1008am 1st cement truck arrived onsite. Truck mixed load for 5min and then slump/air entrain test performed both passed. Slump was 5in and air test was 5% along with a temperature of 79.4f. Five cylinders were collected by Terracon

Started pouring the footer in the NW (STA 1+13) corner and got to STA 3+32.

2nd truck arrived onsite @ 1105. Mixed load for 5min and Donn wanted testing to be performed on this truck also. Slump was 4in and the air test was 5.5% with a temperature of 79.5f.

2nd truck poured footer from STA 3+32 to STA 4+97 then went to the NW corner to STA 1+13 to start pouring the 6in portion of the wall. Truck 2 ended it pour at STA 4+36.

3rd truck arrived onsite with a 1yd load to get from STA 4+36 to STA 4+97 for the 6in portion of the wall where the water stop is located

Samples ID for truck one E1151124 and truck 2 sample ID E1151124 2

Location: PCB Cells

60 loads 10/05/15 for a total of 539 (there were 9 loads that got missed in the math on 9/17/15 that didn't get added in)

Continue to haul in sub-grade soil to PCB cell working along the North limits and finished off the 2nd bridge. Also contractor brought in a smooth drum roller for the DGA to compact both areas that were bridged

Golder was called to the PCB area to do some density testing by contractor. The south limits west of the south entrance was knocked down by the contractor and pushed over to the area where a depth check near the south entrance only had 2in of cover (Test DC-36)

Golder performed 4 density tests 9-12 in areas that were very close to previous tests that had failed

See attached map for test location for Density

Test PCB-9 very close to failed tests PCB-1

Test PCB-10 very close to failed tests PCB-2 & 7

Test PCB-11 is SW of failed test PCB-3 but I will perform another test closer to PCB-3 in the morning. Note that PCB-3 is surrounded by 3 passing test

Location: Area A

There was work completed by Randy's crew in Area A today but never got a chance to go see what they were doing.

However I believe they were prepping the area for concrete along the fence line where concrete is to be poured

Concrete contractor planning on working in that area for the next 2 days and pouring on Friday of this week

Location: CMT Borrow Area

Screening soil and sending it to the PCB cells

Apparently contractor had a fuel line break on the excavator that was loading the screen late morning. It is believed that they took 2 of the empty drums Golder had onsite to contain the fuel

Location: Groundwater Extraction System

Some of the drums to be moved had a little amount of water in the bottom likely b/c the lids were not tightened on and rain water possible got in. Josh Richards is onsite for GW sampling and said he would run the water through a carbon filter at the end of the week before they are disposed of in the roll off

5.0 DISCUSSIONS / MEETINGS

Personnel Involved:	Ellis
Location:	PCB
Topics Covered:	Informed Golder liner crew to be onsite Monday

6.0 CQA TESTING PERFORMED ON-SITE

Location:	PCB cells
Test:	Density testing PCB 9-12

7.0 COMMENTS / ISSUES / OTHER

8.0 EQUIPMENT ONSITE

JD tractor/disc, Volvo compactor smooth drum, 2 Komatsu 210 excavators, SAKAI compactor sheep's foot, JD excavator 270(removed 9/22/15), Komatsu dozer 39EX, Vermeer wood chipper(removed from site 9/8/15), Komatsu excavator 228, JD skid steer 329E, EXTEC soil screener, Komatsu dozer GPS equipped(delivered 9/9/15), Off-road (delivered 9/8/15). Loader delivered to Borrow pit 9/14/15

9.0 PHOTOGRAPHS



2nd bridging PCB area



Showing the footer rebar raised to 2in below top of footer



Ties used to raise rebar



Raising rebar NE corner



Raising rebar south limits



Slump test from truck 1



Pouring footer North limits



Sample from truck one with sample ID



Sample collected from truck 2 with sample ID



Pouring the 6in portion of wall to halfway point on the water stop



Area along south limits knocked down by Taylor and ret tested



Showing the pour along the water stop



Same as above

FIELD MONITORING REPORT

Project No.:	1302962.CQA	**Project Title:**	OU-3 RA Cover Systems
Location:	Anniston, AL		
Owner:	Solutia, Inc.		
Contractor:	Taylor Corp.		

Date: Wednesday, October 7, 2015

1.0 SITE CONDITIONS

Weather Condition:	Mostly sunny
Temperature:	68-85
Precipitation:	none

2.0 HEALTH AND SAFETY

Issues:	Be sure to make eye contact and signal equipment operators when moving around heavy equipment.

3.0 GOLDER PERSONNEL ON SITE

Name	Time on Site
Shawn Casey	0610 to 1500
Patrick Callahan	0730 to 1630
Steve Moeller	0830 to 1600

4.0 SUMMARY OF ACTIVITIES

Location: Autoclave

No activity noted

Location: Area E

No activity noted

Location: PCB Cells

60 loads 10/05/15 for a total of 539 (there were 9 loads that got missed in the math on 9/17/15 that didn't get added in)

Golder Associates Inc.
3730 Chamblee Tucker Road
Atlanta, GA 30341 USA
Tel: (770) 496-1893 Fax: (770) 934-9476 www.golder.com

Golder Associates: Operations in Africa, Asia, Australasia, Europe, North America and South America

Golder, Golder Associates and the GA globe design are trademarks of Golder Associates Corporation

Contractor continued to haul in sub-grade soil to PCB cell, working along the North and east limits.

Golder was called to the PCB area to do some density testing by contractor. Golder performed 4 density tests 13-16 in areas that were very close to previous tests that had failed and newly placed fill. See attached map for test location for Density.

Golder and Solutia witnessed Contractor perform X “pot hole” tests to verify thickness of subgrade soil. One test (previously measured at 2.0 inches) was still low; Contractor was informed and will place additional soil in area.

Golder informed Contractor that subgrade soil should extend to the liner limits on the north, west, and east sides of the PCB cells.

Location: Area A

Concrete contractor placed formwork around southernmost section of Area A.

Location: CMT Borrow Area

Screening soil and sending it to the PCB cells

Location: Groundwater Extraction System

No activity noted

5.0 DISCUSSIONS / MEETINGS

Personnel Involved:	Contractor / Solutia
Location:	Construction Trailer
Topics Covered:	Weekly progress meeting

6.0 CQA TESTING PERFORMED ON-SITE

Location:	PCB cells
Test:	Density testing PCB 13-16

7.0 COMMENTS / ISSUES / OTHER

8.0 EQUIPMENT ONSITE

JD tractor/disc, Volvo compactor smooth drum, 2 Komatsu 210 excavators, SAKAI compactor sheep’s foot, JD excavator 270(removed 9/22/15), Komatsu dozer 39EX, Vermeer wood chipper(removed from

site 9/8/15), Komatsu excavator 228, JD skid steer 329E, EXTEC soil screener, Komatsu dozer GPS equipped(delivered 9/9/15), Off-road (delivered 9/8/15). Loader delivered to Borrow pit 9/14/15

9.0 PHOTOGRAPHS



Checking thickness of subgrade material at PCB Cells



First concrete pour in Area E (poured on 10/6/2015)



Concrete formwork in Area A

FIELD MONITORING REPORT

Project No.:	1302962.CQA	**Project Title:**	OU-3 RA Cover Systems
Location:	Anniston, AL		
Owner:	Solutia, Inc.		
Contractor:	Taylor Corp.		

Date: Thursday, October 8, 2015

1.0 SITE CONDITIONS

Weather Condition:	Mostly sunny
Temperature:	63-82
Precipitation:	none

2.0 HEALTH AND SAFETY

Issues:	Stay clear of equipment when unloading geocomposite

3.0 GOLDER PERSONNEL ON SITE

Name	Time on Site
Patrick Callahan	0650 to1630

4.0 SUMMARY OF ACTIVITIES

Location: Autoclave

No activity noted

Location: Area E

No activity noted

Location: PCB Cells

60 loads 10/05/15 for a total of 539 (there were 9 loads that got missed in the math on 9/17/15 that didn't get added in)

Contractor continued to haul in sub-grade soil to PCB cell, working along the North and east limits. Both bridging layers were covered with soil.

Golder Associates Inc.
3730 Chamblee Tucker Road
Atlanta, GA 30341 USA
Tel: (770) 496-1893 Fax: (770) 934-9476 www.golder.com

Golder Associates: Operations in Africa, Asia, Australasia, Europe, North America and South America

Golder, Golder Associates and the GA globe design are trademarks of Golder Associates Corporation

Solutia witnessed Contractor perform X “pot hole” tests to verify thickness of subgrade soil. One test (previously measured at 2.0 inches) was measured at 7.0 inches after additional material was brought in and compacted.

Contractor placed additional material in northwestern corner of PCB Cells to bring subgrade soil to surveyed liner limits.

Motorgrader used in southwest portion of PCB cells to make minor cuts of ruts and high spots.

One truckload of geocomposite was delivered (rolls 1 through 27). Golder witnessed roll delivery, unloading, and stockpiling.

Location: Area A

Concrete contractor completed formwork around southernmost section of Area A. Rebar was placed in every-other form. First pour is scheduled for 10/9/2015

Location: CMT Borrow Area

Screening soil and sending it to the PCB cells

Location: Groundwater Extraction System

No activity noted

5.0 DISCUSSIONS / MEETINGS

Personnel Involved:	None
Location:	
Topics Covered:	

6.0 CQA TESTING PERFORMED ON-SITE

Location:	PCB cells
Test:	Sieve analyses

7.0 COMMENTS / ISSUES / OTHER

8.0 EQUIPMENT ONSITE

JD tractor/disc, Volvo compactor smooth drum, 2 Komatsu 210 excavators, SAKAI compactor sheep’s foot, JD excavator 270(removed 9/22/15), Komatsu dozer 39EX, Vermeer wood chipper(removed from site 9/8/15), Komatsu excavator 228, JD skid steer 329E, EXTEC soil screener, Komatsu dozer GPS equipped(delivered 9/9/15), Off-road (delivered 9/8/15). Loader delivered to Borrow pit 9/14/15

9.0 PHOTOGRAPHS



Delivery of geocomposite



Stockpiling of geocomposite



Rebar placement in Area A



Motorgrader working on PCB Cells

FIELD MONITORING REPORT

Project No.:	1302962.CQA	**Project Title:**	OU-3 RA Cover Systems
Location:	Anniston, AL		
Owner:	Solutia, Inc.		
Contractor:	Taylor Corp.		

Date: Monday, October 12, 2015

1.0 SITE CONDITIONS

Weather Condition:	clear
Temperature:	55-78
Precipitation:	none

2.0 HEALTH AND SAFETY

Issues:	

3.0 GOLDER PERSONNEL ON SITE

Name	Time on Site
Shawn Casey	0610 to 1700

4.0 SUMMARY OF ACTIVITIES

Location: Autoclave

Installing guard rail

Location: Area E

No activity

Location: PCB Cells

53 loads 10/06/15, 58 loads 10/7/15, 42 loads 10/8/15, 16 loads 10/9/15 for a total of 708 (there were 9 loads that got missed in the math on 9/17/15 that didn't get added in)

Con't to haul in subgrade to the east side of the site

Survey crew onsite doing the laser survey of subgrade at 1000am

Golder Associates Inc.
3730 Chamblee Tucker Road
Atlanta, GA 30341 USA
Tel: (770) 496-1893 Fax: (770) 934-9476 www.golder.com

Golder Associates: Operations in Africa, Asia, Australasia, Europe, North America and South America

Golder, Golder Associates and the GA globe design are trademarks of Golder Associates Corporation

Liner crew arrived onsite at 0800. Spoke with Jimmy (Plastic Fusion superintendent) about the specs. Plastic Fusion did not have a copy of the specs or the CQA plan. Golder printed them out for Plastic fusion. Golder pointed out a few things that are different. Archiving the trial seam, informed him of the 3 peel and 3 sheer tests, no equipment to be on the liner. Basically went through the specs with him

Tony (PM Plastic Fusion) and Ellis onsite around 1300. Ellis wanted to move the anchor trench 2 more feet to the north for more staging area. I informed him that was unlikely and called Steve to confirm.

Also informed Tyler/Ellis that the anchor trench would need to be extended on the SE and SW corner. SW corner will not be much approx. 20ft. Waiting until they have sub-grade in on the east side to see how far the SE anchor trench needs to be extended. Can measure out the panel widths once the sub-grade is in because liner crew not exactly sure yet how they are starting the east side

Taylor wanted to start liner on the west side of the cells but as was stated before that would block them off to the east

Started anchor trench late afternoon SE corner of site 18in wide by 6in deep. Contractor could not find a 12in bucket

Anchor trench to be excavated 6ft from the south side of the anchor trench to the limits

Golder informed contractor site would need to be re-rolled due to the rain over the weekend which caused some rutting and exposed some small stones that just need to be pushed down into the sub-grade

Location: Area A

Poured area along the fence north of the main gate. 3 trucks for a total of 24.5yds. 5 cylinders were collected for samples on each of the first 2 trucks.

Sample ID’s are E1151124 10/12/15 and E1151124 10/12/15 (2)

Location: CMT Borrow Area

Screening soil and sending it to the PCB cells

Location: Groundwater Extraction System

5.0 DISCUSSIONS / MEETINGS

Personnel Involved:	Jimmy
Location:	Plastic Fusion
Topics Covered:	Printed out specs/CQA plan and went through them with superintendent

6.0 CQA TESTING PERFORMED ON-SITE

Location:	PCB cells
Test:	Density testing PCB 9-12

7.0 COMMENTS / ISSUES / OTHER

8.0 EQUIPMENT ONSITE

JD tractor/disc, Volvo compactor smooth drum, 2 Komatsu 210 excavators, SAKAI compactor sheep's foot, JD excavator 270(removed 9/22/15), Komatsu dozer 39EX, Vermeer wood chipper(removed from site 9/8/15), Komatsu excavator 228, JD skid steer 329E, EXTEC soil screener, Komatsu dozer GPS equipped(delivered 9/9/15), Off-road (delivered 9/8/15). Loader delivered to Borrow pit 9/14/15

9.0 PHOTOGRAPHS



Placing sub-grade east side of PCB area



Rebar spacing Area A



Average depth of rebar



Concrete pour north of main gate entrance



Laser survey PCB cells



Some storm water damage to sub-grade PCB area



Showing distance off the limits for anchor trench



Excavating anchor trench south side of PCB area

FIELD MONITORING REPORT

Project No.:	1302962.CQA	**Project Title:**	OU-3 RA Cover Systems
Location:	Anniston, AL		
Owner:	Solutia, Inc.		
Contractor:	Taylor Corp.		

Date: Tuesday, October 13, 2015

1.0 SITE CONDITIONS

Weather Condition:	clear
Temperature:	63-78
Precipitation:	0.9in last night

2.0 HEALTH AND SAFETY

Issues:	New people onsite (liner crew) PPE

3.0 GOLDER PERSONNEL ON SITE

Name	Time on Site
Shawn Casey	0610 to 1700

4.0 SUMMARY OF ACTIVITIES

Location: Autoclave

Location: Area E

Removing forms from the footer pour and installing wall forms.

Contractor is planning on pouring the first 120ft of wall from the SW limits working east on 10/19/15

Location: PCB Cells

53 loads 10/06/15, 58 loads 10/7/15, 42 loads 10/8/15, 16 loads 10/9/15 for a total of 708 (there were 9 loads that got missed in the math on 9/17/15 that didn't get added in)

Golder Associates Inc.
3730 Chamblee Tucker Road
Atlanta, GA 30341 USA
Tel: (770) 496-1893 Fax: (770) 934-9476 www.golder.com

Golder Associates: Operations in Africa, Asia, Australasia, Europe, North America and South America

Golder, Golder Associates and the GA globe design are trademarks of Golder Associates Corporation

Heavy rain late last night made the PCB cells to wet to work on. Caused some rutting that will need to be repaired also

Liner crew left site mid-morning

Contractor going to build road along the south side of the PCB cells in order to have access to the east side of the site for soil placement and liner placement. Basically better access to the cells

Location: Area A

Poured one square along fence line north of main gate Contractor ordered 8yd and 9yds came on the truck

Preparing to finish off the last 2 blocks tomorrow by installing rebar. Also removing forms from the Friday pour

Started cutting contraction joints at 6'8" spacing

Sample ID are E1151124 10/13/15

Location: CMT Borrow Area

Removing the remaining top south east side of site and stock piling under the power lines

Location: Groundwater Extraction System

5.0 DISCUSSIONS / MEETINGS

Personnel Involved:	
Location:	
Topics Covered:	

6.0 CQA TESTING PERFORMED ON-SITE

Location:	
Test:	

7.0 COMMENTS / ISSUES / OTHER

8.0 EQUIPMENT ONSITE

JD tractor/disc, Volvo compactor smooth drum, 2 Komatsu 210 excavators, SAKAI compactor sheep's foot, JD excavator 270(removed 9/22/15), Komatsu dozer 39EX, Vermeer wood chipper(removed from

site 9/8/15), Komatsu excavator 228, JD skid steer 329E, EXTEC soil screener, Komatsu dozer GPS equipped(delivered 9/9/15), Off-road (delivered 9/8/15). Loader delivered to Borrow pit 9/14/15

9.0 PHOTOGRAPHS



PCB area after rain during the night



Same as above



Removing topsoil east side of the borrow source



Pouring concrete Area A north of the main gate



Rebar ready for tomorrow pour



Removed forms along the footer east and south limits area E



West side of PCB storm water damage



North side of the PCB cell wet after rain during the night



Cutting contraction joints area A



6’8” spacing



Clearing out road along south limits of PCB cells

FIELD MONITORING REPORT

Project No.:	1302962.CQA	**Project Title:**	OU-3 RA Cover Systems
Location:	Anniston, AL		
Owner:	Solutia, Inc.		
Contractor:	Taylor Corp.		

Date: Wednesday, October 14, 2015

1.0 SITE CONDITIONS

Weather Condition:	clear
Temperature:	49-78
Precipitation:	none

2.0 HEALTH AND SAFETY

Issues:	Back up alarms on equipment

3.0 GOLDER PERSONNEL ON SITE

Name	Time on Site
Shawn Casey	0610 to 1700

4.0 SUMMARY OF ACTIVITIES

Location: Autoclave

Location: Area E

Started to tie the wall rebar along south and east limits also installed corner forms with the polylock in the SE corner

Contractor is planning on pouring the first 120ft of wall from the SW limits working east on 10/19/15

Location: PCB Cells

54 loads total of 762 as of end of day 10/13/15 (there were 9 loads that got missed in the math on 9/17/15 that didn't get added in)

Golder Associates Inc.
3730 Chamblee Tucker Road
Atlanta, GA 30341 USA
Tel: (770) 496-1893 Fax: (770) 934-9476 www.golder.com

Golder Associates: Operations in Africa, Asia, Australasia, Europe, North America and South America

Golder, Golder Associates and the GA globe design are trademarks of Golder Associates Corporation

Liner crew made up more sand bags for a total of 2000 the left site late morning

Contractor began to haul in soil late morning approx. 0.5 acres remaining to cover

Walk the PCB cells with Steve. It was decided that the anchor trench along the SE corner would not need to be extended to the north but to be sure the sub-grade is pushed out to the limits as close as possible

Location: Area A

Poured final 2 sections north of the main gate 5 cylinders collect with the sample ID of E115 1124 10/14/15

Location: CMT Borrow Area

Continue to screen material after Taylor mechanic repaired back up alarms on 4 pieaces of equipment

Location: Groundwater Extraction System

5.0 DISCUSSIONS / MEETINGS

Personnel Involved:	Steve/Shawn
Location:	PCB area
Topics Covered:	Anchor trench SE corner

6.0 CQA TESTING PERFORMED ON-SITE

Location:	PCB area
Test:	Depth checks 73-89

7.0 COMMENTS / ISSUES / OTHER

8.0 EQUIPMENT ONSITE

JD tractor/disc, Volvo compactor smooth drum, 2 Komatsu 210 excavators, SAKAI compactor sheep's foot, JD excavator 270(removed 9/22/15), Komatsu dozer 39EX, Vermeer wood chipper(removed from site 9/8/15), Komatsu excavator 228, JD skid steer 329E, EXTEC soil screener, Komatsu dozer GPS equipped(delivered 9/9/15), Off-road (delivered 9/8/15). Loader delivered to Borrow pit 9/14/15

9.0 PHOTOGRAPHS



Start concrete pour Area A



Started rebar for wall south limits



Wall form SE corner



Wall form thickness



Rebar spacing



Rebar spacing



Polylock



Polylock 8in below top chamfer



Rebar for wall along east limits

FIELD MONITORING REPORT

Project No.:	1302962.CQA	**Project Title:**	OU-3 RA Cover Systems
Location:	Anniston, AL		
Owner:	Solutia, Inc.		
Contractor:	Taylor Corp.		

Date: Thursday, October 15, 2015

1.0 SITE CONDITIONS

Weather Condition:	clear
Temperature:	51-85
Precipitation:	none

2.0 HEALTH AND SAFETY

Issues:	Traffic on HWY

3.0 GOLDER PERSONNEL ON SITE

Name	Time on Site
Shawn Casey	0610 to 1800

4.0 SUMMARY OF ACTIVITIES

Location: Autoclave

Location: Area E

Contractor 8 men onsite at noon continue to build forms along east limits

Walked area with Steve mid-afternoon everything looked good to him but noted that the rebar needs to continue through (ovelap) at the 120' sections

Contractor is planning on pouring the first 120ft of wall from the SW limits working east on 10/19/15

Location: PCB Cells

Golder Associates Inc.
3730 Chamblee Tucker Road
Atlanta, GA 30341 USA
Tel: (770) 496-1893 Fax: (770) 934-9476 www.golder.com

Golder Associates: Operations in Africa, Asia, Australasia, Europe, North America and South America

Golder, Golder Associates and the GA globe design are trademarks of Golder Associates Corporation

43 loads total of 805 as of end of day 10/14/15 (there were 9 loads that got missed in the math on 9/17/15 that didn't get added in)

Contractor continuing to place soil for sub-grade on east side of site. They were late getting started today and screen was down for approx. 2.5 hrs this afternoon.

Liner crew staged composite SE corner of site

Unloaded 27 rolls of composite early morning for a total of 108 for the PCB area

Excavated anchor trench along the south limits from SE corner to SW corner

Spoke with Steve about the liner trial welds. There is no need for a smooth/smooth trial weld b/c liner no longer has the smooth edges

Location: Area A

No activity

Location: CMT Borrow Area

Continue to screen material for PCB cells

Location: Groundwater Extraction System

5.0 DISCUSSIONS / MEETINGS

Personnel Involved:	Steve/Shawn
Location:	PCB area, Area A and e
Topics Covered:	General discussion about wall/liner

6.0 CQA TESTING PERFORMED ON-SITE

Location:	PCB area/ drive cylinder test PCB DC-3
Test:	Depth checks 90-105

7.0 COMMENTS / ISSUES / OTHER

8.0 EQUIPMENT ONSITE

JD tractor/disc, Volvo compactor smooth drum, 2 Komatsu 210 excavators, SAKAI compactor sheep's foot, JD excavator 270(removed 9/22/15), Komatsu dozer 39EX, Vermeer wood chipper(removed from site 9/8/15), Komatsu excavator 228, JD skid steer 329E, EXTEC soil screener, Komatsu dozer GPS

equipped(delivered 9/9/15), Off-road (delivered 9/8/15). Loader delivered to Borrow pit 9/14/15. Grader onsite 10/14/15

9.0 PHOTOGRAPHS



East side to be completed for sub-grade



East limits



Stock piling composite SE corner PCB area



Smooth drum PCB cells



Wall forming Area E

FIELD MONITORING REPORT

Project No.:	1302962.CQA	**Project Title:**	OU-3 RA Cover Systems
Location:	Anniston, AL		
Owner:	Solutia, Inc.		
Contractor:	Taylor Corp.		

Date: Friday, October 16, 2015

1.0 SITE CONDITIONS

Weather Condition:	clear
Temperature:	55-75
Precipitation:	none

2.0 HEALTH AND SAFETY

Issues:	Equipment inspection forms 10 men Taylor 8 men Plastic Fusion

3.0 GOLDER PERSONNEL ON SITE

Name	Time on Site
Shawn Casey	0610 to 1830

4.0 SUMMARY OF ACTIVITIES

Location: Autoclave

Location: Area E

Contractor 8 men onsite at noon continue to build forms along east limits

Continue with wall forms/chamfer/polylock and rebar ties along east limits

Contractor is planning on pouring the first 120ft of wall from the SW limits working east on 10/20/15

Location: PCB Cells

46 loads total of 851 as of end of day 10/15/15 (there were 9 loads that got missed in the math on 9/17/15 that didn't get added in)

Golder Associates Inc.
3730 Chamblee Tucker Road
Atlanta, GA 30341 USA
Tel: (770) 496-1893 Fax: (770) 934-9476 www.golder.com

Golder Associates: Operations in Africa, Asia, Australasia, Europe, North America and South America

Golder, Golder Associates and the GA globe design are trademarks of Golder Associates Corporation

Morning continue to place sub-grade NE corner

Had contractor add sub-grade to the north limit the soil was not out to the flags

NOTE: survey limits show the liner on the exit road…..are we going to be doing that????

Surveyors onsite shooting the grades and also flagging limits mid-morning

1040am START deploying liner.

Deployed all day along with seaming and pressure testing. Approximately 53,450 square ft deployed and pressure tested

Location: Area A

Started fence post install. According to Josh the fence company was performing work in Area A without a hot work permit nor an excavation permit

Location: CMT Borrow Area

Continue to screen material for PCB cells also worked on screen and started to stockpile soil

Location: Groundwater Extraction System

5.0 DISCUSSIONS / MEETINGS

Personnel Involved:	
Location:	
Topics Covered:	

6.0 CQA TESTING PERFORMED ON-SITE

Location:	PCB Cell
Test:	Depth checks 105-112

7.0 COMMENTS / ISSUES / OTHER

8.0 EQUIPMENT ONSITE

JD tractor/disc, Volvo compactor smooth drum, 2 Komatsu 210 excavators, SAKAI compactor sheep's foot, JD excavator 270(removed 9/22/15), Komatsu dozer 39EX, Vermeer wood chipper(removed from site 9/8/15), Komatsu excavator 228, JD skid steer 329E, EXTEC soil screener, Komatsu dozer GPS equipped(delivered 9/9/15), Off-road (delivered 9/8/15). Loader delivered to Borrow pit 9/14/15. Grader onsite 10/14/15

9.0 PHOTOGRAPHS



Remainder to place NE corner PCB cells



Preparing east side of site for liner



East limits of PCB cells



Flag in front of loader is limits



Continue wall forms and rebar work area E



Install netting along area A north of main gate



Start deploying liner



East limits of PCB cells

FIELD MONITORING REPORT

Project No.:	1302962.CQA	**Project Title:**	OU-3 RA Cover Systems
Location:	Anniston, AL		
Owner:	Solutia, Inc.		
Contractor:	Taylor Corp.		

Date: Saturday, October 17, 2015

1.0 SITE CONDITIONS

Weather Condition:	clear
Temperature:	42-65
Precipitation:	none

2.0 HEALTH AND SAFETY

Issues:	Get proper permits for work zones

3.0 GOLDER PERSONNEL ON SITE

Name	Time on Site
Shawn Casey	0600 to 1730

4.0 SUMMARY OF ACTIVITIES

Location: Autoclave

No activity

Location: Area E

No activity

Location: PCB Cells

Begin deploying panel 13 at 0750 east side of site working west.

Early afternoon had to add water to the sub-grade and smooth drum roll. There were some small rocks at the surface west of panel 19. Wind has been blowing off the surface soil and exposing small rocks. Just need to stay on top of it. Golder informed Ellis of this

Golder Associates Inc.
3730 Chamblee Tucker Road
Atlanta, GA 30341 USA
Tel: (770) 496-1893 Fax: (770) 934-9476 www.golder.com

Golder Associates: Operations in Africa, Asia, Australasia, Europe, North America and South America

Golder, Golder Associates and the GA globe design are trademarks of Golder Associates Corporation

Deployed panels 13-26 for a total of 78,450 ft2

Marked destructs 7-13 for fusion and all seams have been pressure tested

Of not we have had on one pressure test that wouldn't hold air and it was at a butt seam. I have to say that is very good quality

Location: Area A

No activity

Location: CMT Borrow Area

Maintenance on screen

Location: Groundwater Extraction System

5.0 DISCUSSIONS / MEETINGS

Personnel Involved:	
Location:	
Topics Covered:	

6.0 CQA TESTING PERFORMED ON-SITE

Location:	
Test:	

7.0 COMMENTS / ISSUES / OTHER

8.0 EQUIPMENT ONSITE

JD tractor/disc, Volvo compactor smooth drum, 2 Komatsu 210 excavators, SAKAI compactor sheep's foot, JD excavator 270(removed 9/22/15), Komatsu dozer 39EX, Vermeer wood chipper(removed from site 9/8/15), Komatsu excavator 228, JD skid steer 329E, EXTEC soil screener, Komatsu dozer GPS equipped(delivered 9/9/15), Off-road (delivered 9/8/15). Loader delivered to Borrow pit 9/14/15. Grader onsite 10/14/15

9.0 PHOTOGRAPHS



Area A fencing



Fence posts installed



Start deploying

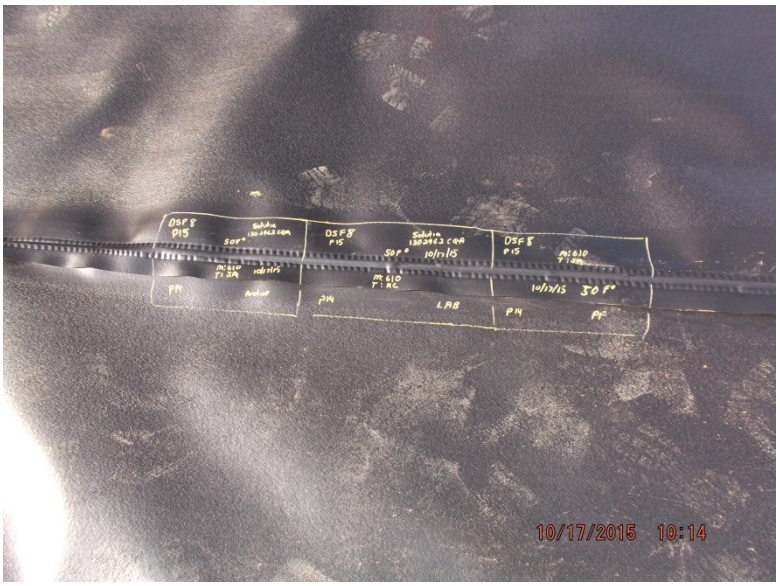

Destruct marked



Needed to water and compact soil west of panel 19 area is drying up and rocks were at surface



Looking SE



Looking east along north limits

FIELD MONITORING REPORT

Project No.:	1302962.CQA	**Project Title:**	OU-3 RA Cover Systems
Location:	Anniston, AL		
Owner:	Solutia, Inc.		
Contractor:	Taylor Corp.		

Date: Sunday, October 18, 2015

1.0 SITE CONDITIONS

Weather Condition:	clear
Temperature:	40-65
Precipitation:	none

2.0 HEALTH AND SAFETY

Issues:	

3.0 GOLDER PERSONNEL ON SITE

Name	Time on Site
Shawn Casey	0600 to 1300

4.0 SUMMARY OF ACTIVITIES

Location: Autoclave

No activity

Location: Area E

No activity

Location: PCB Cells

Begin deploying panel 26 finished with 31

Pressure tested seams

Watering and smooth drum rolling the sub-grade as we deploy to knock down small rocks

Golder Associates Inc.
3730 Chamblee Tucker Road
Atlanta, GA 30341 USA
Tel: (770) 496-1893 Fax: (770) 934-9476 www.golder.com

Golder Associates: Operations in Africa, Asia, Australasia, Europe, North America and South America

Golder, Golder Associates and the GA globe design are trademarks of Golder Associates Corporation

Location: Area A

No activity

Location: CMT Borrow Area

Maintenance on screen

Location: Groundwater Extraction System

5.0 DISCUSSIONS / MEETINGS

Personnel Involved:	
Location:	
Topics Covered:	

6.0 CQA TESTING PERFORMED ON-SITE

Location:	
Test:	

7.0 COMMENTS / ISSUES / OTHER

8.0 EQUIPMENT ONSITE

JD tractor/disc, Volvo compactor smooth drum, 2 Komatsu 210 excavators, SAKAI compactor sheep's foot, JD excavator 270(removed 9/22/15), Komatsu dozer 39EX, Vermeer wood chipper(removed from site 9/8/15), Komatsu excavator 228, JD skid steer 329E, EXTEC soil screener, Komatsu dozer GPS equipped(delivered 9/9/15), Off-road (delivered 9/8/15). Loader delivered to Borrow pit 9/14/15. Grader onsite 10/14/15

9.0 PHOTOGRAPHS



Smooth drum rolling the sub-grade



Preparing to deploy panel 26



Looking east

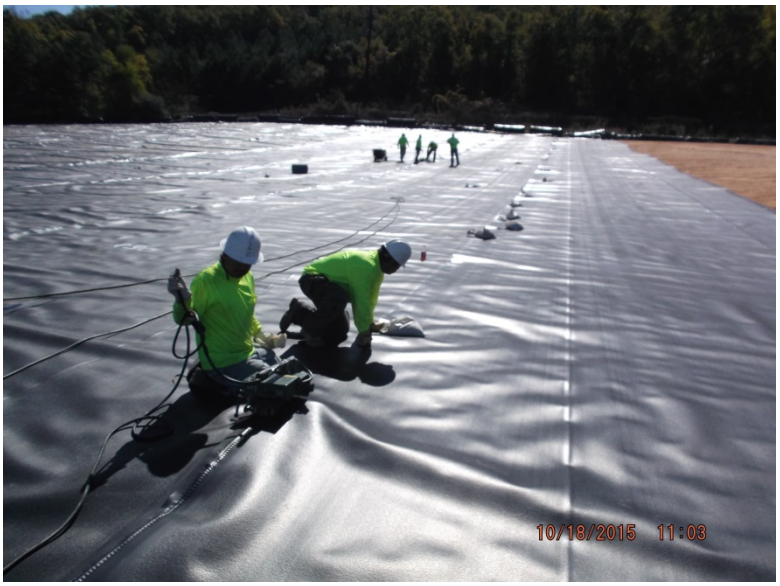

Fusion seaming



Same as above

FIELD MONITORING REPORT

Project No.:	1302962.CQA	**Project Title:**	OU-3 RA Cover Systems
Location:	Anniston, AL		
Owner:	Solutia, Inc.		
Contractor:	Taylor Corp.		

Date: Monday, October 19, 2015

1.0 SITE CONDITIONS

Weather Condition:	clear
Temperature:	38-65
Precipitation:	none

2.0 HEALTH AND SAFETY

Issues:	Equipment check list

3.0 GOLDER PERSONNEL ON SITE

Name	Time on Site
Shawn Casey	0600 to 1630

4.0 SUMMARY OF ACTIVITIES

Location: Autoclave

No activity

Location: Area E

Continue to form up walls for area E

No activity

Location: PCB Cells

Begin deploying panel 32 finished with P44

69,212 ft2 deployed and pressure tested

Golder Associates Inc.
3730 Chamblee Tucker Road
Atlanta, GA 30341 USA
Tel: (770) 496-1893 Fax: (770) 934-9476 www.golder.com

Golder Associates: Operations in Africa, Asia, Australasia, Europe, North America and South America

Golder, Golder Associates and the GA globe design are trademarks of Golder Associates Corporation

Watering and smooth drum rolling the sub-grade as we deploy to knock down small rocks

Location: Area A

Removing fencing

Location: CMT Borrow Area

Stockpiling cover soil for PCB cells

Started getting loads of Topsoil. Contractor stockpiling the topsoil east side of borrow source

Location: Groundwater Extraction System

5.0 DISCUSSIONS / MEETINGS

Personnel Involved:	
Location:	
Topics Covered:	

6.0 CQA TESTING PERFORMED ON-SITE

Location:	
Test:	

7.0 COMMENTS / ISSUES / OTHER

8.0 EQUIPMENT ONSITE

JD tractor/disc, Volvo compactor smooth drum, 2 Komatsu 210 excavators, SAKAI compactor sheep's foot, JD excavator 270(removed 9/22/15), Komatsu dozer 39EX, Vermeer wood chipper(removed from site 9/8/15), Komatsu excavator 228, JD skid steer 329E, EXTEC soil screener, Komatsu dozer GPS equipped(delivered 9/9/15), Off-road (delivered 9/8/15). Loader delivered to Borrow pit 9/14/15. Grader onsite 10/14/15

9.0 PHOTOGRAPHS



Liner PCB cells



Deploying



Rebar at stop block



Same as above



Removing fencing area A

FIELD MONITORING REPORT

Project No.:	1302962.CQA	**Project Title:**	OU-3 RA Cover Systems
Location:	Anniston, AL		
Owner:	Solutia, Inc.		
Contractor:	Taylor Corp.		

Date: Tuesday, October 20, 2015

1.0 SITE CONDITIONS

Weather Condition:	clear
Temperature:	50-70
Precipitation:	none

2.0 HEALTH AND SAFETY

Issues:	Equipment check list(3rd day in a row)

3.0 GOLDER PERSONNEL ON SITE

Name	Time on Site
Shawn Casey	0600 to 1700

4.0 SUMMARY OF ACTIVITIES

Location: Autoclave

No activity

Location: Area E

Continue to form up walls for area E

Performed numerous measurement checks on the polylock/rebar spacing and checked the rebar overlap at the block sops all looked OK

Planning on pouring 2 sections of wall tomorrow at 10am

No activity

Location: PCB Cells

Golder Associates Inc.
3730 Chamblee Tucker Road
Atlanta, GA 30341 USA
Tel: (770) 496-1893 Fax: (770) 934-9476 www.golder.com

Golder Associates: Operations in Africa, Asia, Australasia, Europe, North America and South America

Golder, Golder Associates and the GA globe design are trademarks of Golder Associates Corporation

Begin deploying panel 44 finished with P56

63,052 ft2 deployed and pressure tested

Watering and smooth drum rolling the sub-grade as we deploy to knock down small rocks

28 destructs marked

Unloaded and inventory load of composite for a total of 135 onsite

Location: Area A

Installing DGA pad east to west along parking lot for concrete

Location: CMT Borrow Area

Stockpiling cover soil for PCB cells

Contractor stockpiling the topsoil east side of borrow source

Location: Groundwater Extraction System

5.0 DISCUSSIONS / MEETINGS

Personnel Involved:	
Location:	
Topics Covered:	

6.0 CQA TESTING PERFORMED ON-SITE

Location:	
Test:	

7.0 COMMENTS / ISSUES / OTHER

8.0 EQUIPMENT ONSITE

JD tractor/disc, Volvo compactor smooth drum, 2 Komatsu 210 excavators, SAKAI compactor sheep's foot, JD excavator 270(removed 9/22/15), Komatsu dozer 39EX, Vermeer wood chipper(removed from site 9/8/15), Komatsu excavator 228, JD skid steer 329E, EXTEC soil screener, Komatsu dozer GPS equipped(delivered 9/9/15), Off-road (delivered 9/8/15). Loader delivered to Borrow pit 9/14/15. Grader onsite 10/14/15

9.0 PHOTOGRAPHS



Pressure testing PCB cells



Unloading composite



Smooth drum rolling before deployment



Fusion welding



Area E rebar for wall



Rebar install east limits area E



Polylock 8in from top of wall along east and north limits



Showing rebar extending through stop block



Panel 56 NW corner of PCB cells



Topsoil stock pile



Stockpile of rock and screened soil

FIELD MONITORING REPORT

Project No.:	1302962.CQA	**Project Title:**	OU-3 RA Cover Systems
Location:	Anniston, AL		
Owner:	Solutia, Inc.		
Contractor:	Taylor Corp.		

Date: Wednesday, October 21, 2015

1.0 SITE CONDITIONS

Weather Condition:	clear
Temperature:	50-78
Precipitation:	none

2.0 HEALTH AND SAFETY

Issues:	Equipment check list(4th day in a row)

3.0 GOLDER PERSONNEL ON SITE

Name	Time on Site
Shawn Casey	0600 to 1630

4.0 SUMMARY OF ACTIVITIES

Location: Autoclave

No activity

Location: Area E

Continue to form up walls for area E and ran a string line for top of wall west limits.

As far as I know the DGA has not yet been removed for the west side of the area E limits

2 trucks poured concrete today area E along north and south limits. Total of 13yds. Slump on truck one was 4in and air entrain was 6.8%. 5 cylinders were collect for breaks on the first truck. The second truck was not tested

Total of 240lf of area E wall completed

Golder Associates Inc.
3730 Chamblee Tucker Road
Atlanta, GA 30341 USA
Tel: (770) 496-1893 Fax: (770) 934-9476 www.golder.com

Golder Associates: Operations in Africa, Asia, Australasia, Europe, North America and South America

Golder, Golder Associates and the GA globe design are trademarks of Golder Associates Corporation

No activity

Location: PCB Cells

Begin deploying panel 57 finished with P64

Deployment completed today

Afternoon liner crew cleaned up and cut along the limits of the site for the liner. Hauled the excess liner to their staging area west side of the PCB cells

Watering and smooth drum rolling the sub-grade as we deploy to knock down small rocks

33 destructs marked

Sent 20 destruct to Atlanta lab to be arriving 1st thing in the morning. Called henry to be on the lookout for them and to get tested as soon as possible

Location: Area A

Installing DGA pad east to west along parking lot for concrete

Location: CMT Borrow Area

Stockpiling cover soil for PCB cells

Contractor stockpiling the topsoil east side of borrow source

Location: Groundwater Extraction System

5.0 DISCUSSIONS / MEETINGS

Personnel Involved:	
Location:	
Topics Covered:	

6.0 CQA TESTING PERFORMED ON-SITE

Location:	

Test:	

7.0 COMMENTS / ISSUES / OTHER

8.0 EQUIPMENT ONSITE

JD tractor/disc, Volvo compactor smooth drum, 2 Komatsu 210 excavators, SAKAI compactor sheep's foot, JD excavator 270(removed 9/22/15), Komatsu dozer 39EX, Vermeer wood chipper(removed from site 9/8/15), Komatsu excavator 228, JD skid steer 329E, EXTEC soil screener, Komatsu dozer GPS equipped(delivered 9/9/15), Off-road (delivered 9/8/15). Loader delivered to Borrow pit 9/14/15. Grader onsite 10/14/15

9.0 PHOTOGRAPHS



Deploy west side of PCB cells



Installing string line for top of wall west limits



Start pour Area E NW corner



Pouring wall east limits (SE corner)



Cut liner to limits along south side PCB cells



Cut liner along east limits

FIELD MONITORING REPORT

Project No.:	1302962.CQA	**Project Title:**	OU-3 RA Cover Systems
Location:	Anniston, AL		
Owner:	Solutia, Inc.		
Contractor:	Taylor Corp.		

Date: Thursday, October 22, 2015

1.0 SITE CONDITIONS

Weather Condition:	clear
Temperature:	55-80
Precipitation:	none

2.0 HEALTH AND SAFETY

Issues:	Equipment check list(5th day)

3.0 GOLDER PERSONNEL ON SITE

Name	Time on Site
Shawn Casey	0600 to 1630

4.0 SUMMARY OF ACTIVITIES

Location: Autoclave

No activity

Location: Area E

Removed DGA from the west limits where the area was high. Ellis took the survey shot and is supposed to send to Steve

Did some forming along east limits preparing for a pour on Monday

No activity

Location: PCB Cells

Started and completed repairs an Vbox testing PCB cells

Golder Associates Inc.
3730 Chamblee Tucker Road
Atlanta, GA 30341 USA
Tel: (770) 496-1893 Fax: (770) 934-9476 www.golder.com

Golder Associates: Operations in Africa, Asia, Australasia, Europe, North America and South America

Golder, Golder Associates and the GA globe design are trademarks of Golder Associates Corporation

Steve took destructs 21-33 to Atlanta lab for testing in the afternoon

Location: Area A

Installing DGA pad east to west along parking lot for concrete

Started to build forms along pad/fence line

Location: CMT Borrow Area

Stockpiling cover soil for PCB cells

Contractor stockpiling the topsoil east side of borrow source

Location: Groundwater Extraction System

5.0 DISCUSSIONS / MEETINGS

Personnel Involved:	
Location:	
Topics Covered:	

6.0 CQA TESTING PERFORMED ON-SITE

Location:	
Test:	

7.0 COMMENTS / ISSUES / OTHER

8.0 EQUIPMENT ONSITE

JD tractor/disc, Volvo compactor smooth drum, 2 Komatsu 210 excavators, SAKAI compactor sheep's foot, JD excavator 270(removed 9/22/15), Komatsu dozer 39EX, Vermeer wood chipper(removed from site 9/8/15), Komatsu excavator 228, JD skid steer 329E, EXTEC soil screener, Komatsu dozer GPS equipped(delivered 9/9/15), Off-road (delivered 9/8/15). Loader delivered to Borrow pit 9/14/15. Grader onsite 10/14/15

9.0 PHOTOGRAPHS



DGA removed in high area



Step down DGA west limits



Vbox testing



Forms for pad Area A

FIELD MONITORING REPORT

Project No.:	1302962.CQA	**Project Title:**	OU-3 RA Cover Systems
Location:	Anniston, AL		
Owner:	Solutia, Inc.		
Contractor:	Taylor Corp.		

Date: Friday, October 23, 2015

1.0 SITE CONDITIONS

Weather Condition:	clear
Temperature:	55-82
Precipitation:	none

2.0 HEALTH AND SAFETY

Issues:	Increase in traffic due to race weekend

3.0 GOLDER PERSONNEL ON SITE

Name	Time on Site
Shawn Casey	0600 to 1500
Patrick Callahan	1000 to 1600

4.0 SUMMARY OF ACTIVITIES

Location: Autoclave

No activity

Location: Area E

Poured the remainder of the east limits

1st concrete truck showed up onsite but did not have proper paperwork for the batch so it was sent back approx. 1300

2nd truck arrived onsite approx. 1400

Slump 2.5 added 5 gallons of water slump 4in

Golder Associates Inc.
3730 Chamblee Tucker Road
Atlanta, GA 30341 USA
Tel: (770) 496-1893 Fax: (770) 934-9476 www.golder.com

Golder Associates: Operations in Africa, Asia, Australasia, Europe, North America and South America

Golder, Golder Associates and the GA globe design are trademarks of Golder Associates Corporation

Air entrain 6.8% temperature 85f

5cylinders collected for breaks same ID number 1124 10/23/15

Note: Golder/ PM was not informed there was going to be a pour today

Location: PCB Cells

Started composite deployment east side of site. A total of 22 rolls were laid out; composite was placed, but no seaming took place.

Discussed with Steve an alternative way of connecting the end seams of the composite instead of sewing the end seams together.

Location: Area A

Installing DGA pad east to west along parking lot for concrete

Plan is to pour on Monday for areas along parking lot

Location: CMT Borrow Area

Stockpiling and screening of cover soil for PCB cells

Removed the ash from the borrow source chip pile fire

Location: Groundwater Extraction System

No activity

5.0 DISCUSSIONS / MEETINGS

Personnel Involved:	Shawn/Patrick
Location:	PCB cells
Topics Covered:	Geocomposite install

6.0 CQA TESTING PERFORMED ON-SITE

Location:	
Test:	

7.0 COMMENTS / ISSUES / OTHER

None

8.0 EQUIPMENT ONSITE

JD tractor/disc, Volvo compactor smooth drum, 2 Komatsu 210 excavators, SAKAI compactor sheep's foot, JD excavator 270(removed 9/22/15), Komatsu dozer 39EX, Vermeer wood chipper(removed from site 9/8/15), Komatsu excavator 228, JD skid steer 329E, EXTEC soil screener, Komatsu dozer GPS equipped(delivered 9/9/15), Off-road (delivered 9/8/15). Loader delivered to Borrow pit 9/14/15. Grader onsite 10/14/15

9.0 PHOTOGRAPHS



Concrete wall pour at Area E



Connection of adjoining geocomposite layers (zip ties at 5-foot spacing)



Rolling out geocomposite along east side of PCB Cells



Placement and compaction of DGA material along southeast side of Area A, foundation preparation for concrete placement

FIELD MONITORING REPORT

Project No.:	1302962.CQA	**Project Title:**	OU-3 RA Cover Systems
Location:	Anniston, AL		
Owner:	Solutia, Inc.		
Contractor:	Taylor Corp.		

Date: Saturday, October 24, 2015

1.0 SITE CONDITIONS

Weather Condition:	clear
Temperature:	55-75
Precipitation:	none

2.0 HEALTH AND SAFETY

Issues:	Traffic b/c of race weekend

3.0 GOLDER PERSONNEL ON SITE

Name	Time on Site
Shawn Casey	0630 to 0900
Patrick Callahan	0700 to 1400

4.0 SUMMARY OF ACTIVITIES

Location: Autoclave

No activity

Location: Area E

No activity

Location: PCB Cells

Deployment of geocomposite continued. XX rolls were laid out. One section was seamed to test the sewing machine, but no further seaming has taken place.

Location: Area A

Golder Associates Inc.
3730 Chamblee Tucker Road
Atlanta, GA 30341 USA
Tel: (770) 496-1893 Fax: (770) 934-9476 www.golder.com

Golder Associates: Operations in Africa, Asia, Australasia, Europe, North America and South America

Golder, Golder Associates and the GA globe design are trademarks of Golder Associates Corporation

No activity

Location: CMT Borrow Area

Stockpiling and screening of cover soil for PCB cells

Location: Groundwater Extraction System

5.0 DISCUSSIONS / MEETINGS

Personnel Involved:	None
Location:	
Topics Covered:	

6.0 CQA TESTING PERFORMED ON-SITE

Location:	
Test:	

7.0 COMMENTS / ISSUES / OTHER

8.0 EQUIPMENT ONSITE

JD tractor/disc, Volvo compactor smooth drum, 2 Komatsu 210 excavators, SAKAI compactor sheep's foot, JD excavator 270(removed 9/22/15), Komatsu dozer 39EX, Vermeer wood chipper(removed from site 9/8/15), Komatsu excavator 228, JD skid steer 329E, EXTEC soil screener, Komatsu dozer GPS equipped(delivered 9/9/15), Off-road (delivered 9/8/15). Loader delivered to Borrow pit 9/14/15. Grader onsite 10/14/15

9.0 PHOTOGRAPHS



Connection of geocomposite panels with zip ties (6-inch spacing in anchor trench)



Test of seaming machine at end section of geocomposite



Seam at connection of geocomposite

FIELD MONITORING REPORT

Project No.:	1302962.CQA	**Project Title:**	OU-3 RA Cover Systems
Location:	Anniston, AL		
Owner:	Solutia, Inc.		
Contractor:	Taylor Corp.		

Date: Monday, October 26, 2015

1.0 SITE CONDITIONS

Weather Condition:	Cloudy
Temperature:	55-65
Precipitation:	rain

2.0 HEALTH AND SAFETY

Issues:	

3.0 GOLDER PERSONNEL ON SITE

Name	Time on Site
Shawn Casey	0600 to 1000

4.0 SUMMARY OF ACTIVITIES

Location: Autoclave

No activity

Location: Area E

No activity

Location: PCB Cells

No activity

Location: Area A

No activity

Golder Associates Inc.
3730 Chamblee Tucker Road
Atlanta, GA 30341 USA
Tel: (770) 496-1893 Fax: (770) 934-9476 www.golder.com

Golder Associates: Operations in Africa, Asia, Australasia, Europe, North America and South America

Golder, Golder Associates and the GA globe design are trademarks of Golder Associates Corporation

Location: CMT Borrow Area

Repaired the screen had a blown hydraulic line

Location: Area C&D

Started bring in DGA to be mixed with gravel. Contractor to place thin layer 2-3in over the entire area then mix the DGA with the gravel using a excavator

Location: Groundwater Extraction System

5.0 DISCUSSIONS / MEETINGS

Personnel Involved:	Shawn/Patrick
Location:	PCB cells
Topics Covered:	Geocomposite install

6.0 CQA TESTING PERFORMED ON-SITE

Location:	
Test:	

7.0 COMMENTS / ISSUES / OTHER

8.0 EQUIPMENT ONSITE

JD tractor/disc, Volvo compactor smooth drum, 2 Komatsu 210 excavators, SAKAI compactor sheep's foot, JD excavator 270(removed 9/22/15), Komatsu dozer 39EX, Vermeer wood chipper(removed from site 9/8/15), Komatsu excavator 228, JD skid steer 329E, EXTEC soil screener, Komatsu dozer GPS equipped(delivered 9/9/15), Off-road (delivered 9/8/15). Loader delivered to Borrow pit 9/14/15. Grader onsite 10/14/15

9.0 PHOTOGRAPHS

FIELD MONITORING REPORT

Project No.:	1302962.CQA	**Project Title:**	OU-3 RA Cover Systems
Location:	Anniston, AL		
Owner:	Solutia, Inc.		
Contractor:	Taylor Corp.		

Date: Tuesday, October 27, 2015

1.0 SITE CONDITIONS

Weather Condition:	Cloudy
Temperature:	55-65
Precipitation:	Rain 1.8in of rain for 10/26 and 10/27/15

2.0 HEALTH AND SAFETY

Issues:	Hot work areas

3.0 GOLDER PERSONNEL ON SITE

Name	Time on Site
Shawn Casey	0600 to 1600

4.0 SUMMARY OF ACTIVITIES

Location: Autoclave

No activity

Location: Area E

No activity

Location: PCB Cells

No activity

Location: Area A

Excavated around PIV Valve to extend near sumps along road

Golder Associates Inc.
3730 Chamblee Tucker Road
Atlanta, GA 30341 USA
Tel: (770) 496-1893 Fax: (770) 934-9476 www.golder.com

Golder Associates: Operations in Africa, Asia, Australasia, Europe, North America and South America

Golder, Golder Associates and the GA globe design are trademarks of Golder Associates Corporation

Location: CMT Borrow Area

No activity

Location: Area C&D

Continue to haul in DGA to be mixed with gravel. Contractor to place thin layer 2-3in over the entire area then mix the DGA with the gravel using an excavator

10/26/15 =16 loads

10/27/15= 17 loads for a total of 33 as of end of day 10/27/15

Location: Groundwater Extraction System

5.0 DISCUSSIONS / MEETINGS

Personnel Involved:	Shawn/Patrick
Location:	PCB cells
Topics Covered:	Geocomposite install

6.0 CQA TESTING PERFORMED ON-SITE

Location:	
Test:	

7.0 COMMENTS / ISSUES / OTHER

8.0 EQUIPMENT ONSITE

JD tractor/disc, Volvo compactor smooth drum, 2 Komatsu 210 excavators, SAKAI compactor sheep's foot, JD excavator 270(removed 9/22/15), Komatsu dozer 39EX, Vermeer wood chipper(removed from site 9/8/15), Komatsu excavator 228, JD skid steer 329E, EXTEC soil screener, Komatsu dozer GPS equipped(delivered 9/9/15), Off-road (delivered 9/8/15). Loader delivered to Borrow pit 9/14/15. Grader onsite 10/14/15

9.0 PHOTOGRAPHS



Removing guard rail from C&D



Placing DGA area C&D but not mixing yet



Same as above



Excavating around PIV valve to extend

FIELD MONITORING REPORT

Project No.:	1302962.CQA	**Project Title:**	OU-3 RA Cover Systems
Location:	Anniston, AL		
Owner:	Solutia, Inc.		
Contractor:	Taylor Corp.		

Date: Tuesday, October 27, 2015

1.0 SITE CONDITIONS

Weather Condition:	Cloudy/ PC
Temperature:	58-71
Precipitation:	Rain/mist early morning

2.0 HEALTH AND SAFETY

Issues:	Housekeeping

3.0 GOLDER PERSONNEL ON SITE

Name	Time on Site
Shawn Casey	0600 to 1730

4.0 SUMMARY OF ACTIVITIES

Location: Autoclave

No activity

Location: Area E

Removing wall forms north limits

Location: PCB Cells

No activity liner crew left mid-morning because of the weather

Location: Area A

Continue to excavate PIV' area A. Contractor needs a different extension to fit the PIV's. Contractor extended fire hydrant and excavated out the hydrant to be abandoned and capped off

Golder Associates Inc.
3730 Chamblee Tucker Road
Atlanta, GA 30341 USA
Tel: (770) 496-1893 Fax: (770) 934-9476 www.golder.com

Golder Associates: Operations in Africa, Asia, Australasia, Europe, North America and South America

Golder, Golder Associates and the GA globe design are trademarks of Golder Associates Corporation

2 trucks of composite arrived onsite to be unloaded. 1st truck 24 rolls second truck 18 rolls. There should have been 20 rolls on truck2. Golder informed contractor 2 rolls missing from the order(rolls 178 &179)

Location: CMT Borrow Area

No activity

Location: Area C&D

Continue to haul in DGA to be mixed with gravel. Contractor to place thin layer 2-3in over the entire area then mix the DGA with the gravel using an excavator

Installing silt fencing east limits

10/27/15= 17 loads for a total of 33 as of end of day 10/27/15

Location: Groundwater Extraction System

5.0 DISCUSSIONS / MEETINGS

Personnel Involved:	Shawn/Patrick
Location:	PCB cells
Topics Covered:	Geocomposite install

6.0 CQA TESTING PERFORMED ON-SITE

Location:	
Test:	

7.0 COMMENTS / ISSUES / OTHER

8.0 EQUIPMENT ONSITE

JD tractor/disc, Volvo compactor smooth drum, 2 Komatsu 210 excavators, SAKAI compactor sheep's foot, JD excavator 270(removed 9/22/15), Komatsu dozer 39EX, Vermeer wood chipper(removed from site 9/8/15), Komatsu excavator 228, JD skid steer 329E, EXTEC soil screener, Komatsu dozer GPS equipped(delivered 9/9/15), Off-road (delivered 9/8/15). Loader delivered to Borrow pit 9/14/15. Grader onsite 10/14/15

9.0 PHOTOGRAPHS



Installing silt fencing C&D area



DGA placement C&D area



Excavating PIV's



Abandon fire hydrant Area A

FIELD MONITORING REPORT

Project No.:	1302962.CQA	**Project Title:**	OU-3 RA Cover Systems
Location:	Anniston, AL		
Owner:	Solutia, Inc.		
Contractor:	Taylor Corp.		

Date: Thursday, October 29, 2015

1.0 SITE CONDITIONS

Weather Condition:	Cloudy/ PC
Temperature:	55-78
Precipitation:	Rain/mist early morning

2.0 HEALTH AND SAFETY

Issues:	Hot work zones booties

3.0 GOLDER PERSONNEL ON SITE

Name	Time on Site
Shawn Casey	0600 to 1630

4.0 SUMMARY OF ACTIVITIES

Location: Autoclave

No activity

Location: Area E

Removing wall forms east limits

Location: PCB Cells

Deploy 23 rolls of composite.

Total rolls as of today 90

Location: Area A

Golder Associates Inc.
3730 Chamblee Tucker Road
Atlanta, GA 30341 USA
Tel: (770) 496-1893 Fax: (770) 934-9476 www.golder.com

Golder Associates: Operations in Africa, Asia, Australasia, Europe, North America and South America

Golder, Golder Associates and the GA globe design are trademarks of Golder Associates Corporation

Backfilled hydrant NW corner of site.

Called Steve about storm drain that inlets to Area A NW corner of site and outlets approx. 100ft south of NW corner to Area A north side of site. Inlet needs to be blocked off to prevent storm water from getting under liner

Concrete pour along parking lot 2 trucks total of 13.5 yds. Truck 1 tested for slump 4in and air entrain 5%.

4 cylinders collected for sample off 1st truck

Location: CMT Borrow Area

No activity

Location: Area C&D

Continue to haul in DGA to be mixed with gravel. Contractor to place thin layer 2-3in over the entire area then mix the DGA with the gravel using an excavator

Started to break up concrete SW corner where trucks used area as a washout

10/28/15= 18 loads for a total of 51 as of end of day 10/28/15

65 loads of DGA 10/29/15 for a total of 116 as of end of day 10/29/15

Location: Groundwater Extraction System

5.0 DISCUSSIONS / MEETINGS

Personnel Involved:	Donn/shawn
Location:	West End LF
Topics Covered:	Alabama power out hole in existing liner

6.0 CQA TESTING PERFORMED ON-SITE

Location:	
Test:	

7.0 COMMENTS / ISSUES / OTHER

8.0 EQUIPMENT ONSITE

JD tractor/disc, Volvo compactor smooth drum, 2 Komatsu 210 excavators, SAKAI compactor sheep's foot, JD excavator 270(removed 9/22/15), Komatsu dozer 39EX, Vermeer wood chipper(removed from site 9/8/15), Komatsu excavator 228, JD skid steer 329E, EXTEC soil screener, Komatsu dozer GPS equipped(delivered 9/9/15), Off-road (delivered 9/8/15). Loader delivered to Borrow pit 9/14/15. Grader onsite 10/14/15

9.0 PHOTOGRAPHS



North limit was Area E



Fire hydrant removal Are A NW corner



Deploying composite PCB Cells



DGA placement area C&D



Cap off hydrant NW corner Area A



Storm drain outlet Area A North limits



Concrete pour area A



Liner repair West End LF



Liner repair West End LF



Same as above



Breaking up concrete Area C&D

FIELD MONITORING REPORT

Project No.:	1302962.CQA	**Project Title:**	OU-3 RA Cover Systems
Location:	Anniston, AL		
Owner:	Solutia, Inc.		
Contractor:	Taylor Corp.		

Date: Friday, October 30, 2015

1.0 SITE CONDITIONS

Weather Condition:	clear
Temperature:	60-78
Precipitation:	Rain/mist early morning

2.0 HEALTH AND SAFETY

Issues:	Hot work zones booties

3.0 GOLDER PERSONNEL ON SITE

Name	Time on Site
Shawn Casey	0600 to 1630

4.0 SUMMARY OF ACTIVITIES

Location: Autoclave

No activity

Location: Area E

Survey wall height for the west limits

Location: PCB Cells

Deploy 12 rolls of composite.

Total rolls as of today 102

Finish deploying composite begin to tie butt seams together

Golder Associates Inc.
3730 Chamblee Tucker Road
Atlanta, GA 30341 USA
Tel: (770) 496-1893 Fax: (770) 934-9476 www.golder.com

Golder Associates: Operations in Africa, Asia, Australasia, Europe, North America and South America

Golder, Golder Associates and the GA globe design are trademarks of Golder Associates Corporation

Location: Area A

Concrete pour along parking lot 2 trucks total of 13. yds. Truck 1 tested for slump 5in and air entrain 6.2%.

4 cylinders collected for sample off 1st truck

Plant manager wanted the fence post along the north side of the parking lot in Area A moved back 4ft off the curb

Location: CMT Borrow Area

Screening soil for cover over liner

Location: Area C&D

Continue to haul in DGA to be mixed with gravel. Contractor to place thin layer 2-3in over the entire area then mix the DGA with the gravel using an excavator

loads of DGA=29 10/30/15 for a total of 145 as of end of day 10/30/15

Location: Groundwater Extraction System

5.0 DISCUSSIONS / MEETINGS

Personnel Involved:	
Location:	
Topics Covered:	

6.0 CQA TESTING PERFORMED ON-SITE

Location:	
Test:	

7.0 COMMENTS / ISSUES / OTHER

8.0 EQUIPMENT ONSITE

JD tractor/disc, Volvo compactor smooth drum, 2 Komatsu 210 excavators, SAKAI compactor sheep's foot, JD excavator 270(removed 9/22/15), Komatsu dozer 39EX, Vermeer wood chipper(removed from site 9/8/15), Komatsu excavator 228, JD skid steer 329E, EXTEC soil screener, Komatsu dozer GPS equipped(delivered 9/9/15), Off-road (delivered 9/8/15). Loader delivered to Borrow pit 9/14/15. Grader onsite 10/14/15

9.0 PHOTOGRAPHS



Expansion joints added before pour



Finishing up deployment of composite



Cover soil stock pile



DGA placement area C&D



Removing poles to move back 4ft off the curb



Start preparing pad for concrete north limits area A

FIELD MONITORING REPORT

Project No.:	1302962.CQA	**Project Title:**	OU-3 RA Cover Systems
Location:	Anniston, AL		
Owner:	Solutia, Inc.		
Contractor:	Taylor Corp.		

Date: Monday, November 02, 2015

1.0 SITE CONDITIONS

Weather Condition:	cloudy
Temperature:	60-78
Precipitation:	Mist early morning and late afternoon. Site received 2.5in of rain over the weekend

2.0 HEALTH AND SAFETY

Issues:	Site is muddy, slips trips and falls

3.0 GOLDER PERSONNEL ON SITE

Name	Time on Site
Shawn Casey	0600 to 1545

4.0 SUMMARY OF ACTIVITIES

Location: Autoclave

No activity

Location: Area E

No activity

Location: PCB Cells

Finish sewing north/south seams of composite continue to tie butt seams and sew

Location: Area A

Saturday the fence post were installed 4ft back off the curb north side of the parking lot

Golder Associates Inc.
3730 Chamblee Tucker Road
Atlanta, GA 30341 USA
Tel: (770) 496-1893 Fax: (770) 934-9476 www.golder.com

Golder Associates: Operations in Africa, Asia, Australasia, Europe, North America and South America

Golder, Golder Associates and the GA globe design are trademarks of Golder Associates Corporation

Location: CMT Borrow Area

Working on the screen area is to wet to screen soil

Contractor started clearing right of way for south fence at the property limits for the borrow source and towards the PCB cells

Location: Area C&D

Continue to haul in DGA to be mixed with gravel.

Contractor began mixing the DGA with the gravel. Contractor had a grader delivered to site with a root rake attachment. The rake is approx. 11in long and is used to get down into the DGA/gravel to mi

Truck load of the Geocells was delivered to the C&D area

3 loads of rip rap for the wet land area

Loads of DGA=28 11/02/15 for a total of 173 as of end of day 11/02/15

Location: Groundwater Extraction System

5.0 DISCUSSIONS / MEETINGS

Personnel Involved:	
Location:	
Topics Covered:	

6.0 CQA TESTING PERFORMED ON-SITE

Location:	
Test:	

7.0 COMMENTS / ISSUES / OTHER

8.0 EQUIPMENT ONSITE

JD tractor/disc, Volvo compactor smooth drum, 2 Komatsu 210 excavators, SAKAI compactor sheep's foot, JD excavator 270(removed 9/22/15), Komatsu dozer 39EX, Vermeer wood chipper(removed from site 9/8/15), Komatsu excavator 228, JD skid steer 329E, EXTEC soil screener, Komatsu dozer GPS equipped(delivered 9/9/15), Off-road (delivered 9/8/15). Loader delivered to Borrow pit 9/14/15. Grader onsite 10/14/15

9.0 PHOTOGRAPHS



Borrow source



Continue to sew composite



Mixing DGA/gravel



Same as above



Same as above



Showing rake length



Continue to tie butt seams PCB area



3 loads of Rip Rap for the wet land area in C&D



Clearing trees for fence along south property line

FIELD MONITORING REPORT

Project No.:	1302962.CQA	**Project Title:**	OU-3 RA Cover Systems
Location:	Anniston, AL		
Owner:	Solutia, Inc.		
Contractor:	Taylor Corp.		

Date: Tuesday, November 03, 2015

1.0 SITE CONDITIONS

Weather Condition:	cloudy
Temperature:	64-75
Precipitation:	N/A

2.0 HEALTH AND SAFETY

Issues:	Traffic in the C&D area

3.0 GOLDER PERSONNEL ON SITE

Name	Time on Site
Shawn Casey	0600 to 1630

4.0 SUMMARY OF ACTIVITIES

Location: Autoclave

Location: Area E

Building forms to raise vault and sign

Location: PCB Cells

Composite completed at noon began to clean up area. There is liner scraps laying at the exit to the cell b/c they needed another dumpster which will be delivered 11/4/15 and Taylor will pick up the rest of the trash to load dumpster

Also left sand bags along all limits as an anchor for the liner to protect it from any wind getting under it. Spoke with Josh and informed him Taylor can empty the bags once they start putting fill on the cells

Golder Associates Inc.
3730 Chamblee Tucker Road
Atlanta, GA 30341 USA
Tel: (770) 496-1893 Fax: (770) 934-9476 www.golder.com

Golder Associates: Operations in Africa, Asia, Australasia, Europe, North America and South America

Golder, Golder Associates and the GA globe design are trademarks of Golder Associates Corporation

Location: Area A

Building forms along north side of parking lot for pour 11/04/15

Installing extensions on PIV valves

Location: CMT Borrow Area

No activity

Location: Area C&D

Continue to haul in DGA to be mixed with gravel.

Soft area along east limits was wind rowed to dry

Loads of DGA=28 11/02/15 for a total of 173 as of end of day 11/02/15 for the mix of DGA/gravel

48 truckloads of DGA for the 6in base. Contractor started to stock pile the loads once they were informed that they need and base survey to show the 1ft of DGA to be placed

Location: Groundwater Extraction System

5.0 DISCUSSIONS / MEETINGS

Personnel Involved:	
Location:	
Topics Covered:	

6.0 CQA TESTING PERFORMED ON-SITE

Location:	
Test:	

7.0 COMMENTS / ISSUES / OTHER

8.0 EQUIPMENT ONSITE

JD tractor/disc, Volvo compactor smooth drum, 2 Komatsu 210 excavators, SAKAI compactor sheep's foot, JD excavator 270(removed 9/22/15), Komatsu dozer 39EX, Vermeer wood chipper(removed from site 9/8/15), Komatsu excavator 228, JD skid steer 329E, EXTEC soil screener, Komatsu dozer GPS equipped(delivered 9/9/15), Off-road (delivered 9/8/15). Loader delivered to Borrow pit 9/14/15. Grader onsite 10/14/15

9.0 PHOTOGRAPHS



Mixing DGA/gravel north side of C&D



Soft area east limits C&D



Sewing butt seams



Building forms along parking lot area A



Building form to raise vault area E



Trimming composite along north limits



Extending PIV valves

FIELD MONITORING REPORT

Project No.:	1302962.CQA	**Project Title:**	OU-3 RA Cover Systems
Location:	Anniston, AL		
Owner:	Solutia, Inc.		
Contractor:	Taylor Corp.		

Date: Wednesday, November 04, 2015

1.0 SITE CONDITIONS

Weather Condition:	Cloudy/ PC
Temperature:	65-77
Precipitation:	N/A

2.0 HEALTH AND SAFETY

Issues:	Hot areas proper PPE

3.0 GOLDER PERSONNEL ON SITE

Name	Time on Site
Shawn Casey	0600 to 1630

4.0 SUMMARY OF ACTIVITIES

Location: Autoclave

Location: Area E

Building forms to raise sign and poured around the raised vault

Location: PCB Cells

No activity

Location: Area A

Pour in 4 locations along parking lot total of 14yds

Golder Associates Inc.
3730 Chamblee Tucker Road
Atlanta, GA 30341 USA
Tel: (770) 496-1893 Fax: (770) 934-9476 www.golder.com

Golder Associates: Operations in Africa, Asia, Australasia, Europe, North America and South America

Golder, Golder Associates and the GA globe design are trademarks of Golder Associates Corporation

Webb concrete was onsite and did their own slump/cylinder testing along with Terracon. Webb collected their sample after the 1st truck emptied half their load and Terracon did the test before the truck poured.

Building forms along north side of parking lot for pour 11/05/15

Finished extensions on PIV valves

Location: CMT Borrow Area

No activity

Location: Area C&D

Mixing of the DGA/gravel completed

Soft area along east limits was wind rowed to dry.

Loads of DGA=28 11/02/15 for a total of 173 as of end of day 11/02/15 for the mix of DGA/gravel

75 truckloads of DGA for the 6in base for a total of 103 as of end of day 11/4/15.

Turner surveyor's onsite to survey 50ft grid on mixed base so that we will have a reference for the finished elevation

Location: Groundwater Extraction System

5.0 DISCUSSIONS / MEETINGS

Personnel Involved:	Golder/Taylor
Location:	C&D
Topics Covered:	Soft area to put down textile and cover

6.0 CQA TESTING PERFORMED ON-SITE

Location:	C&D
Test:	Collect 2 samples of the DGA for proctor/particle size

7.0 COMMENTS / ISSUES / OTHER

8.0 EQUIPMENT ONSITE

JD tractor/disc, Volvo compactor smooth drum, 2 Komatsu 210 excavators, SAKAI compactor sheep's foot, JD excavator 270(removed 9/22/15), Komatsu dozer 39EX, Vermeer wood chipper(removed from site 9/8/15), Komatsu excavator 228, JD skid steer 329E, EXTEC soil screener, Komatsu dozer GPS

equipped(delivered 9/9/15), Off-road (delivered 9/8/15). Loader delivered to Borrow pit 9/14/15. Grader onsite 10/14/15

9.0 PHOTOGRAPHS

No picture today camera battery is broken and plant does not have another camera. I have ordered a new battery and should be in 11/5/15

FIELD MONITORING REPORT

Project No.:	1302962.CQA	**Project Title:**	OU-3 RA Cover Systems
Location:	Anniston, AL		
Owner:	Solutia, Inc.		
Contractor:	Taylor Corp.		

Date: Thursday, November 05, 2015

1.0 SITE CONDITIONS

Weather Condition:	Cloudy/ PC
Temperature:	66-78
Precipitation:	N/A

2.0 HEALTH AND SAFETY

Issues:	Smoking in designated areas

3.0 GOLDER PERSONNEL ON SITE

Name	Time on Site
Shawn Casey	0600 to 1630

4.0 SUMMARY OF ACTIVITIES

Location: Autoclave

Location: Area E

No activity

Location: PCB Cells

Marked locations where Taylor will build 3ft roads to place cover soil

Location: Area A

Pour in 4 locations along Area A parking lot collected 4 samples off 1st truck

Building forms along north side of parking lot for pour 11/06/15

Golder Associates Inc.
3730 Chamblee Tucker Road
Atlanta, GA 30341 USA
Tel: (770) 496-1893 Fax: (770) 934-9476 www.golder.com

Golder Associates: Operations in Africa, Asia, Australasia, Europe, North America and South America

Golder, Golder Associates and the GA globe design are trademarks of Golder Associates Corporation

Continue pad for concrete along north limits

Location: CMT Borrow Area

Screening soil

Location: Area C&D

64 truckloads of DGA for the 6in base for a total of 167 as of end of day 11/5/15.

Installed 2 rolls of Mirafi textile on soft area and partially covered with 6in of DGA. Complete the rest on 11/6/15

Golder did a couple of moisture checks on the DGA just to see where it was at coming off the truck and after sitting for a day. Both came back at 2.9%

Location: Groundwater Extraction System

No activity

5.0 DISCUSSIONS / MEETINGS

Personnel Involved:	
Location:	
Topics Covered:	

6.0 CQA TESTING PERFORMED ON-SITE

Location:	C&D
Test:	Collect 2 samples of the DGA for proctor/particle size

7.0 COMMENTS / ISSUES / OTHER

8.0 EQUIPMENT ONSITE

JD tractor/disc, Volvo compactor smooth drum, 2 Komatsu 210 excavators, SAKAI compactor sheep's foot, JD excavator 270(removed 9/22/15), Komatsu dozer 39EX, Vermeer wood chipper(removed from site 9/8/15), Komatsu excavator 228, JD skid steer 329E, EXTEC soil screener, Komatsu dozer GPS equipped(delivered 9/9/15), Off-road (delivered 9/8/15). Loader delivered to Borrow pit 9/14/15. Grader onsite 10/14/15

9.0 PHOTOGRAPHS



Placing 6in DGA base south are of C&D



Grading DGA C&D



Compacting 6in base C&D



Geocell



Same as above



Pour Area A



DGA base north limits Area A



Screening soil



MIRAFI textile soft area C&D



Covering textile with 6in of DGA



Same as above

FIELD MONITORING REPORT

Project No.:	1302962.CQA	**Project Title:**	OU-3 RA Cover Systems
Location:	Anniston, AL		
Owner:	Solutia, Inc.		
Contractor:	Taylor Corp.		

Date: Friday, November 06, 2015

1.0 SITE CONDITIONS

Weather Condition:	Cloudy/ PC
Temperature:	65-78
Precipitation:	N/A

2.0 HEALTH AND SAFETY

Issues:	

3.0 GOLDER PERSONNEL ON SITE

Name	Time on Site
Shawn Casey	0600 to 1630

4.0 SUMMARY OF ACTIVITIES

Location: Autoclave

Location: Area E

No activity

Location: PCB Cells

No activity

Location: Area A

No pour because of the chance of rain

Building forms near sump

Golder Associates Inc.
3730 Chamblee Tucker Road
Atlanta, GA 30341 USA
Tel: (770) 496-1893 Fax: (770) 934-9476 www.golder.com

Golder Associates: Operations in Africa, Asia, Australasia, Europe, North America and South America

Golder, Golder Associates and the GA globe design are trademarks of Golder Associates Corporation

Pulled drain pipe Area A and blocked off culvert north limits area A

Location: CMT Borrow Area

Screening soil

Location: Area C&D

86 truckloads of DGA for the 6in base for a total of 252 as of end of day 11/6/15.

Performed 7 density tests

Location: Groundwater Extraction System

No activity

5.0 DISCUSSIONS / MEETINGS

Personnel Involved:	
Location:	
Topics Covered:	

6.0 CQA TESTING PERFORMED ON-SITE

Location:	C&D
Test:	Density testing C&D

7.0 COMMENTS / ISSUES / OTHER

8.0 EQUIPMENT ONSITE

JD tractor/disc, Volvo compactor smooth drum, 2 Komatsu 210 excavators, SAKAI compactor sheep's foot, JD excavator 270(removed 9/22/15), Komatsu dozer 39EX, Vermeer wood chipper(removed from site 9/8/15), Komatsu excavator 228, JD skid steer 329E, EXTEC soil screener, Komatsu dozer GPS equipped(delivered 9/9/15), Off-road (delivered 9/8/15). Loader delivered to Borrow pit 9/14/15. Grader onsite 10/14/15

9.0 PHOTOGRAPHS



Placing 6in DGA base C&D



Block of culvert with concrete



Pull pipe Area A



Building form around sump



Continue 6in base north side area A

FIELD MONITORING REPORT

Project No.:	1302962.CQA	**Project Title:**	OU-3 RA Cover Systems
Location:	Anniston, AL		
Owner:	Solutia, Inc.		
Contractor:	Taylor Corp.		

Date: Monday, November 09, 2015

1.0 SITE CONDITIONS

Weather Condition:	Rain/heavy mist
Temperature:	48-55
Precipitation:	4in of rain over the weekend

2.0 HEALTH AND SAFETY

Issues:	

3.0 GOLDER PERSONNEL ON SITE

Name	Time on Site
Shawn Casey	0600 to 1100

4.0 SUMMARY OF ACTIVITIES

Location: Autoclave

No activity

Location: Area E

No activity

Location: PCB Cells

Golder noted 2 area NE corner where silt fence needs repairs

Location: Area A

Contractor had Sunshine Inc. onsite to go over the geocell installation

Golder Associates Inc.
3730 Chamblee Tucker Road
Atlanta, GA 30341 USA
Tel: (770) 496-1893 Fax: (770) 934-9476 www.golder.com

Golder Associates: Operations in Africa, Asia, Australasia, Europe, North America and South America

Golder, Golder Associates and the GA globe design are trademarks of Golder Associates Corporation

Silt fence bottom of slope near wetland got covered by the soil that washed out on the slope

Location: CMT Borrow Area

No activity

Small washout under silt fence east of the basin where the silt fence overlapped

Location: Area C&D

86 truckloads of DGA for the 6in base for a total of 252 as of end of day 11/6/15.

Location: Groundwater Extraction System

No activity

5.0 DISCUSSIONS / MEETINGS

Personnel Involved:	
Location:	
Topics Covered:	

6.0 CQA TESTING PERFORMED ON-SITE

Location:	C&D
Test:	Density testing C&D

7.0 COMMENTS / ISSUES / OTHER

8.0 EQUIPMENT ONSITE

JD tractor/disc, Volvo compactor smooth drum, 2 Komatsu 210 excavators, SAKAI compactor sheep's foot, JD excavator 270(removed 9/22/15), Komatsu dozer 39EX, Vermeer wood chipper(removed from site 9/8/15), Komatsu excavator 228, JD skid steer 329E, EXTEC soil screener, Komatsu dozer GPS equipped(delivered 9/9/15), Off-road (delivered 9/8/15). Loader delivered to Borrow pit 9/14/15. Grader onsite 10/14/15

9.0 PHOTOGRAPHS



C&D washout



Storm water damage C&D



Same as above



Borrow source



Washout west side of PCB where soil was added to get liner to limits



Washout under the silt fence NE corner PCB cells



Another area NE corner that needs repairs



Basin has silt build up



Laid out some geocell C&D



DGA washed off the slope to the wetland

FIELD MONITORING REPORT

Project No.:	1302962.CQA	**Project Title:**	OU-3 RA Cover Systems
Location:	Anniston, AL		
Owner:	Solutia, Inc.		
Contractor:	Taylor Corp.		

Date: Tuesday, November 10, 2015

1.0 SITE CONDITIONS

Weather Condition:	PC
Temperature:	48-68
Precipitation:	Mist in the morning

2.0 HEALTH AND SAFETY

Issues:	

3.0 GOLDER PERSONNEL ON SITE

Name	Time on Site
Shawn Casey	0600 to 1545

4.0 SUMMARY OF ACTIVITIES

Location: Autoclave

No activity

Location: Area E

No activity

Location: PCB Cells

Repair silt fence

Location: Area A

Concrete pour along parking lot and sump total of 15yds

Golder Associates Inc.
3730 Chamblee Tucker Road
Atlanta, GA 30341 USA
Tel: (770) 496-1893 Fax: (770) 934-9476 www.golder.com

Golder Associates: Operations in Africa, Asia, Australasia, Europe, North America and South America

Golder, Golder Associates and the GA globe design are trademarks of Golder Associates Corporation

Building forms along north limits area A

1st truck came in slump was tested they started pouring a section but the air entrain failed at 4%. Did a retest still only 4.3%. Finished that one section sample that load and Josh sent the truck offsite

Location: CMT Borrow Area

Repair silt fence near basin

Location: Area C&D

Started Geocell install SE corner top of slope. Golder informed Ellis that it doesn't look like they have the geocell out far enough in the anchor trench. Also informed Josh of this but will get with Steve before the weekly meeting to confirm

Repaired washout from the rain will take a couple of density tests on 11/11/15 after it has been compacted

14 truckloads of DGA for the 6in base for a total of 264 as of end of day 11/10/15.

Location: Groundwater Extraction System

No activity

5.0 DISCUSSIONS / MEETINGS

Personnel Involved:	
Location:	
Topics Covered:	

6.0 CQA TESTING PERFORMED ON-SITE

Location:	C&D
Test:	Density testing C&D

7.0 COMMENTS / ISSUES / OTHER

8.0 EQUIPMENT ONSITE

JD tractor/disc, Volvo compactor smooth drum, 2 Komatsu 210 excavators, SAKAI compactor sheep's foot, JD excavator 270(removed 9/22/15), Komatsu dozer 39EX, Vermeer wood chipper(removed from site 9/8/15), Komatsu excavator 228, JD skid steer 329E, EXTEC soil screener, Komatsu dozer GPS

equipped(delivered 9/9/15), Off-road (delivered 9/8/15). Loader delivered to Borrow pit 9/14/15. Grader onsite 10/14/15

9.0 PHOTOGRAPHS



Repair washout C&D



Repairing silt fence Borrow source west of basin



Building forms along north limits area A



Geocell installation C&D

FIELD MONITORING REPORT

Project No.:	1302962.CQA	**Project Title:**	OU-3 RA Cover Systems
Location:	Anniston, AL		
Owner:	Solutia, Inc.		
Contractor:	Taylor Corp.		

Date: Wednesday, November 11, 2015

1.0 SITE CONDITIONS

Weather Condition:	PC
Temperature:	50-73
Precipitation:	none

2.0 HEALTH AND SAFETY

Issues:	Traffic/vehicle inspection

3.0 GOLDER PERSONNEL ON SITE

Name	Time on Site
Shawn Casey	0600 to 1630

4.0 SUMMARY OF ACTIVITIES

Location: Autoclave

No activity

Location: Area E

No activity

Location: PCB Cells

No activity

Location: Area A

Concrete pour along parking lot and north limits. Poured 6 sections for a total of 25yds. 1st concrete truck was tested/sampled

Golder Associates Inc.
3730 Chamblee Tucker Road
Atlanta, GA 30341 USA
Tel: (770) 496-1893 Fax: (770) 934-9476 www.golder.com

Golder Associates: Operations in Africa, Asia, Australasia, Europe, North America and South America

Golder, Golder Associates and the GA globe design are trademarks of Golder Associates Corporation

Building forms along north limits area A

Showed Steve a sub-grade high point NE corner of area A that won't need and sub-grade base for liner

Location: CMT Borrow Area

Moved around the top of the screened soil to try to dry

Location: Area C&D

Continue to install geocells along south limits. Steve confirmed that the geocell is supposed to go thru the anchor trench as Golder indicated to Taylor yesterday. The cell is to extend 3ft in the trench

Golder/Taylor decided to change the road location in C&D. Taylor will build to lessen the amount of DGA to be used

14 truckloads of DGA for the 6in base for a total of 264 as of end of day 11/10/15.

Location: Groundwater Extraction System

No activity

5.0 DISCUSSIONS / MEETINGS

Personnel Involved:	Taylor/Golder/Donn
Location:	C&D
Topics Covered:	Relocated road

6.0 CQA TESTING PERFORMED ON-SITE

Location:	C&D
Test:	Density testing C&D. tested the repaired storm water damaged area

7.0 COMMENTS / ISSUES / OTHER

8.0 EQUIPMENT ONSITE

JD tractor/disc, Volvo compactor smooth drum, 2 Komatsu 210 excavators, SAKAI compactor sheep's foot, JD excavator 270(removed 9/22/15), Komatsu dozer 39EX, Vermeer wood chipper(removed from site 9/8/15), Komatsu excavator 228, JD skid steer 329E, EXTEC soil screener, Komatsu dozer GPS equipped(delivered 9/9/15), Off-road (delivered 9/8/15). Loader delivered to Borrow pit 9/14/15. Grader onsite 10/14/15

9.0 PHOTOGRAPHS



Moving soil around on pile to dry



Compacting area that was repaired from storm C&D



Concrete pour north limits



Geocell extended 3ft into the anchor trench



Geocell installation south limits C&D

FIELD MONITORING REPORT

Project No.:	1302962.CQA	**Project Title:**	OU-3 RA Cover Systems
Location:	Anniston, AL		
Owner:	Solutia, Inc.		
Contractor:	Taylor Corp.		

Date: Thursday, November 12, 2015

1.0 SITE CONDITIONS

Weather Condition:	Cloudy in the morning clear afternoon
Temperature:	54-71
Precipitation:	Light rain early

2.0 HEALTH AND SAFETY

Issues:	Back strain installing geocells

3.0 GOLDER PERSONNEL ON SITE

Name	Time on Site
Shawn Casey	0600 to 1630

4.0 SUMMARY OF ACTIVITIES

Location: Autoclave

No activity

Location: Area E

No activity

Location: PCB Cells

No activity

Location: Area A

3 concrete trucks today sampled/tested truck one. Total delivered to site 21.5yds

Golder Associates Inc.
3730 Chamblee Tucker Road
Atlanta, GA 30341 USA
Tel: (770) 496-1893 Fax: (770) 934-9476 www.golder.com

Golder Associates: Operations in Africa, Asia, Australasia, Europe, North America and South America

Golder, Golder Associates and the GA globe design are trademarks of Golder Associates Corporation

Tying rebar north limits

Location: CMT Borrow Area

Moving the screened material around in the pile to dry the soil

Hauling rock from the screened rock pile offsite to the Oxford Recreation center

Location: Area C&D

Continue to install Geocells along south limits working North to the bottom of south slope

1 pallet of Geocell= 4480 ft2

3 pallets installed 11/12/15= 13,440ft2

Total Geocell pallets installed as of 11/12/15= 10 for 44,800ft2

Golder on a couple of occasions had to inform the PM and Taylor that they were not installing the correct amount of ATRA Anchors or the correct placement of anchors per panel as shown in the drawings supplied by Taylor

Repaired check dam NE side of C&D that got washed out during storm event

18 truckloads of DGA for the 6in base and fill for the Geocell for a total of 282 as of end of day 11/11/15.

Total of 173 loads for the mix of DGA and gravel

Location: Groundwater Extraction System

No activity

5.0 DISCUSSIONS / MEETINGS

Personnel Involved:	
Location:	
Topics Covered:	

6.0 CQA TESTING PERFORMED ON-SITE

Location:	
Test:	

7.0 COMMENTS / ISSUES / OTHER

8.0 EQUIPMENT ONSITE

JD tractor/disc, Volvo compactor smooth drum, 2 Komatsu 210 excavators, SAKAI compactor sheep's foot, JD excavator 270(removed 9/22/15), Komatsu dozer 39EX, Vermeer wood chipper(removed from site 9/8/15), Komatsu excavator 228, JD skid steer 329E, EXTEC soil screener, Komatsu dozer GPS equipped(delivered 9/9/15), Off-road (delivered 9/8/15). Loader delivered to Borrow pit 9/14/15. Grader onsite 10/14/15

9.0 PHOTOGRAPHS



Concrete pour north limits area A



Same as above



Geocell install C&D

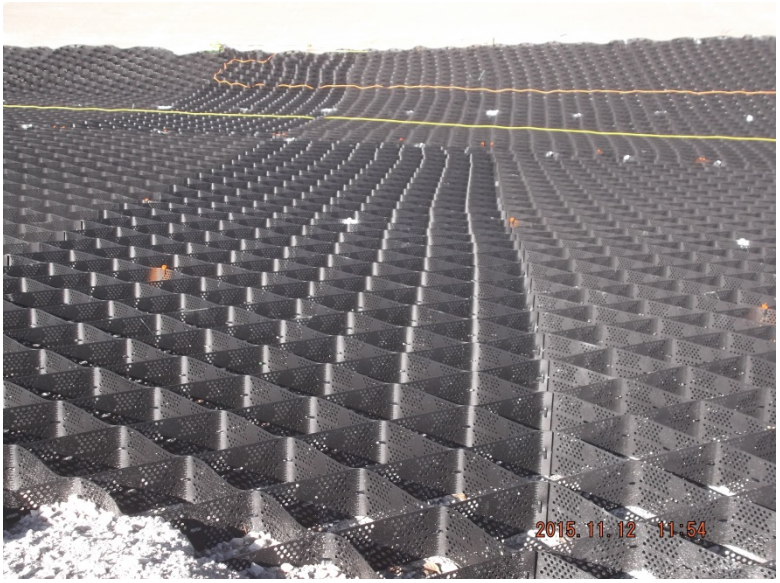

Showing a panel layout that does not have the correct amount of stakes (anchors)



Check dam repair NE corner C&D



Geocell install south slope



Screened soil still wet borrow source

FIELD MONITORING REPORT

Project No.:	1302962.CQA	**Project Title:**	OU-3 RA Cover Systems
Location:	Anniston, AL		
Owner:	Solutia, Inc.		
Contractor:	Taylor Corp.		

Date: Friday, November 13, 2015

1.0 SITE CONDITIONS

Weather Condition:	clear
Temperature:	55-72
Precipitation:	none

2.0 HEALTH AND SAFETY

Issues:	Staying hydrated during cooler weather

3.0 GOLDER PERSONNEL ON SITE

Name	Time on Site
Shawn Casey	0600 to 1630

4.0 SUMMARY OF ACTIVITIES

Location: Autoclave

No activity

Location: Area E

No activity

Location: PCB Cells

No activity

Location: Area A

2 concrete trucks today sampled/tested truck one. Total delivered to site 11.5yds

Golder Associates Inc.
3730 Chamblee Tucker Road
Atlanta, GA 30341 USA
Tel: (770) 496-1893 Fax: (770) 934-9476 www.golder.com

Golder Associates: Operations in Africa, Asia, Australasia, Europe, North America and South America

Golder, Golder Associates and the GA globe design are trademarks of Golder Associates Corporation

Poured north limits of area A

Location: CMT Borrow Area

Start to place cover soil on the PCB cells west exit working east with 3ft road. Not using the stockpile of soil b/c contractor thinks it is too wet therefor loading trucks off the screen

Total loads placed 36 11/13/15

Loads of rock removed form borrow source to recreation center as of end of day 11/13/15= 41

Location: Area C&D

Continue to install Geocells along south limits working north

Placing DGA on the Geocells as the install

1 pallet of Geocell= 4480 ft2 11/12/15 need quantities for 11/13/15

3 pallets installed 11/12/15= 13,440ft2 Need quantities for 11/13/15

Total Geocell pallets installed as of 11/12/15= 10 for 44,800ft2

Golder continues to find panels with insufficient anchors

18 truckloads of DGA for the 6in base and fill for the Geocell for a total of 282 as of end of day 11/11/15. Need truck count for 11/12/15 & 11/13/15

Total of 173 loads for the mix of DGA and gravel

Location: Groundwater Extraction System

No activity

5.0 DISCUSSIONS / MEETINGS

Personnel Involved:	
Location:	
Topics Covered:	

6.0 CQA TESTING PERFORMED ON-SITE

Location:	Collect VDGA7 C&D area
Test:	Particle size/moisture

7.0 COMMENTS / ISSUES / OTHER

8.0 EQUIPMENT ONSITE

JD tractor/disc, Volvo compactor smooth drum, 2 Komatsu 210 excavators, SAKAI compactor sheep's foot, JD excavator 270(removed 9/22/15), Komatsu dozer 39EX, Vermeer wood chipper(removed from site 9/8/15), Komatsu excavator 228, JD skid steer 329E, EXTEC soil screener, Komatsu dozer GPS equipped(delivered 9/9/15), Off-road (delivered 9/8/15). Loader delivered to Borrow pit 9/14/15. Grader onsite 10/14/15

9.0 PHOTOGRAPHS



Installing geocells C&D area



Start placing cover soil PCB area



Concrete pour north limits area A



Screening soil for PCB placement



DGA placement C&D area



Trying to make the best of a not so fun job!



Collect DGA sample VDGA7

FIELD MONITORING REPORT

Project No.:	1302962.CQA	**Project Title:**	OU-3 RA Cover Systems
Location:	Anniston, AL		
Owner:	Solutia, Inc.		
Contractor:	Taylor Corp.		

Date: Saturday, November 14, 2015

1.0 SITE CONDITIONS

Weather Condition:	clear
Temperature:	38-62
Precipitation:	none

2.0 HEALTH AND SAFETY

Issues:	

3.0 GOLDER PERSONNEL ON SITE

Name	Time on Site
Shawn Casey	0600 to 1600

4.0 SUMMARY OF ACTIVITIES

Location: Autoclave

No activity

Location: Area E

No activity

Location: PCB Cells

Building 3ft road working from the west exit to the east

Location: Area A

No activity

Golder Associates Inc.
3730 Chamblee Tucker Road
Atlanta, GA 30341 USA
Tel: (770) 496-1893 Fax: (770) 934-9476 www.golder.com

Golder Associates: Operations in Africa, Asia, Australasia, Europe, North America and South America

Golder, Golder Associates and the GA globe design are trademarks of Golder Associates Corporation

Location: CMT Borrow Area

Screening cover soil for 3ft road

Screen broke down late in the afternoon believe it is a broken hydraulic hose

Total loads 11/14/15= ???????

Total loads placed 36 11/13/15

Loads of rock removed form borrow source to recreation center as of end of day 11/13/15= 41

11/14/15=?????

Location: Area C&D

No activity

1 pallet of Geocell= 4480 ft2 11/12/15 need quantities for 11/13/15

3 pallets installed 11/12/15= 13,440ft2 Need quantities for 11/13/15

Total Geocell pallets installed as of 11/12/15= 10 for 44,800ft2

Golder continues to find panels with insufficient anchors

18 truckloads of DGA for the 6in base and fill for the Geocell for a total of 282 as of end of day 11/11/15. Need truck count for 11/12/15 & 11/13/15

Total of 173 loads for the mix of DGA and gravel

Location: Groundwater Extraction System

No activity

5.0 DISCUSSIONS / MEETINGS

Personnel Involved:	
Location:	
Topics Covered:	

6.0 CQA TESTING PERFORMED ON-SITE

Location:	

Test:	

7.0 COMMENTS / ISSUES / OTHER

8.0 EQUIPMENT ONSITE

JD tractor/disc, Volvo compactor smooth drum, 2 Komatsu 210 excavators, SAKAI compactor sheep's foot, JD excavator 270(removed 9/22/15), Komatsu dozer 39EX, Vermeer wood chipper(removed from site 9/8/15), Komatsu excavator 228, JD skid steer 329E, EXTEC soil screener, Komatsu dozer GPS equipped(delivered 9/9/15), Off-road (delivered 9/8/15). Loader delivered to Borrow pit 9/14/15. Grader onsite 10/14/15

9.0 PHOTOGRAPHS



Screening soil for 3ft road pcb cells



3ft road west exit PCB cells



FIELD MONITORING REPORT

Project No.:	1302962.CQA	**Project Title:**	OU-3 RA Cover Systems
Location:	Anniston, AL		
Owner:	Solutia, Inc.		
Contractor:	Taylor Corp.		

Date: Sunday, November 15, 2015

1.0 SITE CONDITIONS

Weather Condition:	cloudy
Temperature:	43-64
Precipitation:	none

2.0 HEALTH AND SAFETY

Issues:	

3.0 GOLDER PERSONNEL ON SITE

Name	Time on Site
Shawn Casey	0800 to 1430

4.0 SUMMARY OF ACTIVITIES

Location: Autoclave

No activity

Location: Area E

No activity

Location: PCB Cells

Screen down so pulling material off the screened soil which is a little wet. Not using to build road pushing it out 1.5ft thick south of the 3ft road towards SW corner

3rd day placing cover/building 3ft road PCB cells

Location: Area A

Golder Associates Inc.
3730 Chamblee Tucker Road
Atlanta, GA 30341 USA
Tel: (770) 496-1893 Fax: (770) 934-9476 www.golder.com

Golder Associates: Operations in Africa, Asia, Australasia, Europe, North America and South America

Golder, Golder Associates and the GA globe design are trademarks of Golder Associates Corporation

No activity

Location: CMT Borrow Area

Screening cover soil for 3ft road

Screen broke down late in the afternoon believe it is a broken hydraulic hose

Total loads 11/14/15= 22

Total loads 11/15/15= 43

Total loads placed 101 11/15/15

Loads of rock removed form borrow source to recreation center as of end of day 11/13/15= 41

11/14/15= Donn will no longer let me track the rock loads taken offsite

Location: Area C&D

No activity

2 pallets of Geocell= 8960 ft2 11/13/15

Total Geocell pallets installed as of 11/13/15= 12 for 53,760ft2

Golder continues to find panels with insufficient anchors

14 truckloads of DGA 11/12/15 and 11 loads 11/13/15 for the 6in base and fill for the Geocell for a total of 307 as of end of day 11/13/15.

Total of 173 loads for the mix of DGA and gravel

Location: Groundwater Extraction System

No activity

5.0 DISCUSSIONS / MEETINGS

Personnel Involved:	
Location:	
Topics Covered:	

6.0 CQA TESTING PERFORMED ON-SITE

Location:	
Test:	

7.0 COMMENTS / ISSUES / OTHER

8.0 EQUIPMENT ONSITE

JD tractor/disc, Volvo compactor smooth drum, 2 Komatsu 210 excavators, SAKAI compactor sheep's foot, JD excavator 270(removed 9/22/15), Komatsu dozer 39EX, Vermeer wood chipper(removed from site 9/8/15), Komatsu excavator 228, JD skid steer 329E, EXTEC soil screener, Komatsu dozer GPS equipped(delivered 9/9/15), Off-road (delivered 9/8/15). Loader delivered to Borrow pit 9/14/15. Grader onsite 10/14/15

9.0 PHOTOGRAPHS



Placing 1.5ft of cover off 3ft road that will be thinned down to 1ft later



Same as above



Same as above



End of day 11/15/15

FIELD MONITORING REPORT

Project No.:	1302962.CQA	**Project Title:**	OU-3 RA Cover Systems
Location:	Anniston, AL		
Owner:	Solutia, Inc.		
Contractor:	Taylor Corp.		

Date: Monday, November 16, 2015

1.0 SITE CONDITIONS

Weather Condition:	Partly cloudy
Temperature:	50-68
Precipitation:	none

2.0 HEALTH AND SAFETY

Issues:	Equipment checklist forms Mid-morning brake failure on off-road truck

3.0 GOLDER PERSONNEL ON SITE

Name	Time on Site
Shawn Casey	0800 to 1430

4.0 SUMMARY OF ACTIVITIES

Location: Autoclave

No activity

Location: Area E

Building wall forms NW corner

Location: PCB Cells

Placing 1ft lift west of south entrance

Approx. 1050 off road truck mechanical failure. No more hauling soil until incident report is completed as per order of PM

Day 4 hauling cover soil to PCB cells

Golder Associates Inc.
3730 Chamblee Tucker Road
Atlanta, GA 30341 USA
Tel: (770) 496-1893 Fax: (770) 934-9476 www.golder.com

Golder Associates: Operations in Africa, Asia, Australasia, Europe, North America and South America

Golder, Golder Associates and the GA globe design are trademarks of Golder Associates Corporation

Location: Area A

No activity

Location: CMT Borrow Area

Screening cover soil for 3ft road

Truckloads of cover soil 11/16/15= 23

Total loads placed 124 11/16/15

Location: Area C&D

2 pallets of Geocell= 8960 ft2 11/15/15

Total Geocell pallets installed as of 11/15/15= 12 for 62,720ft2

16 truckloads of DGA 11/15/15 6in base and fill for the Geocell for a total of 323 as of end of day 11/15/15.

Total of 173 loads for the mix of DGA and gravel

Location: Groundwater Extraction System

No activity

5.0 DISCUSSIONS / MEETINGS

Personnel Involved:	
Location:	
Topics Covered:	

6.0 CQA TESTING PERFORMED ON-SITE

Location:	
Test:	

7.0 COMMENTS / ISSUES / OTHER

8.0 EQUIPMENT ONSITE

JD tractor/disc, Volvo compactor smooth drum, 2 Komatsu 210 excavators, SAKAI compactor sheep's foot, JD excavator 270(removed 9/22/15), Komatsu dozer 39EX, Vermeer wood chipper(removed from

site 9/8/15), Komatsu excavator 228, JD skid steer 329E, EXTEC soil screener, Komatsu dozer GPS equipped(delivered 9/9/15), Off-road (delivered 9/8/15). Loader delivered to Borrow pit 9/14/15. Grader onsite 10/14/15

9.0 PHOTOGRAPHS



Geocell install anchor trench C&D



Borrow source stockpile for cover soil PCB cells



Geocell install C&D



Wall form NW corner area E



Same as above



Same as above



Cover soil PCB cells



Geocell install C&D



C&D geocell install

FIELD MONITORING REPORT

Project No.:	1302962.CQA	**Project Title:**	OU-3 RA Cover Systems
Location:	Anniston, AL		
Owner:	Solutia, Inc.		
Contractor:	Taylor Corp.		

Date: Tuesday, November 17, 2015

1.0 SITE CONDITIONS

Weather Condition:	Partly cloudy
Temperature:	55-70
Precipitation:	none

2.0 HEALTH AND SAFETY

Issues:	Discussed Monday's incicdent

3.0 GOLDER PERSONNEL ON SITE

Name	Time on Site
Shawn Casey	0700 to 1400

4.0 SUMMARY OF ACTIVITIES

Location: Autoclave

No activity

Location: Area E

Building wall forms NW corner

Location: PCB Cells

No activity

Day 4 hauling cover soil to PCB cells (on hold)

Location: Area A

Golder Associates Inc.
3730 Chamblee Tucker Road
Atlanta, GA 30341 USA
Tel: (770) 496-1893 Fax: (770) 934-9476 www.golder.com

Golder Associates: Operations in Africa, Asia, Australasia, Europe, North America and South America

Golder, Golder Associates and the GA globe design are trademarks of Golder Associates Corporation

No activity

Location: CMT Borrow Area

No activity

Truckloads of cover soil 11/16/15= 23

Total loads placed 124 11/16/15

Location: Area C&D

2 pallets of Geocell= 8960 ft2 11/16/15

Total Geocell pallets installed as of 11/16/15= 14 for 71,680ft2

17 truckloads of DGA 11/16/15 6in base and fill for the Geocell for a total of 340 as of end of day 11/16/15.

1 load of rip rap for anchor ditch of geocells

Total of 173 loads for the mix of DGA and gravel

Location: Groundwater Extraction System

No activity

5.0 DISCUSSIONS / MEETINGS

Personnel Involved:	
Location:	
Topics Covered:	

6.0 CQA TESTING PERFORMED ON-SITE

Location:	
Test:	

7.0 COMMENTS / ISSUES / OTHER

8.0 EQUIPMENT ONSITE

JD tractor/disc, Volvo compactor smooth drum, 2 Komatsu 210 excavators, SAKAI compactor sheep's foot, JD excavator 270(removed 9/22/15), Komatsu dozer 39EX, Vermeer wood chipper(removed from site 9/8/15), Komatsu excavator 228, JD skid steer 329E, EXTEC soil screener, Komatsu dozer GPS

equipped(delivered 9/9/15), Off-road (delivered 9/8/15). Loader delivered to Borrow pit 9/14/15. Grader onsite 10/14/15

9.0 PHOTOGRAPHS



Placing DGA on geocells C&D



Same as above



Forming wall area E



C&D geocell/DGA install



Borrow source screened soil



Textile/rip rap placement C&D along anchor for geocells



Same as above

FIELD MONITORING REPORT

Project No.:	1302962.CQA	**Project Title:**	OU-3 RA Cover Systems
Location:	Anniston, AL		
Owner:	Solutia, Inc.		
Contractor:	Taylor Corp.		

Date: Wednesday, November 18, 2015

1.0 SITE CONDITIONS

Weather Condition:	Cloudy
Temperature:	64-68
Precipitation:	Heavy rain at 0940

2.0 HEALTH AND SAFETY

Issues:	Check light connections and lights on trailers

3.0 GOLDER PERSONNEL ON SITE

Name	Time on Site
Shawn Casey	0600 to 1200

4.0 SUMMARY OF ACTIVITIES

Location: Autoclave

No activity

Location: Area E

No activity

Location: PCB Cells

No activity

Day 4 hauling cover soil to PCB cells (on hold)

Location: Area A

Golder Associates Inc.
3730 Chamblee Tucker Road
Atlanta, GA 30341 USA
Tel: (770) 496-1893 Fax: (770) 934-9476 www.golder.com

Golder Associates: Operations in Africa, Asia, Australasia, Europe, North America and South America

Golder, Golder Associates and the GA globe design are trademarks of Golder Associates Corporation

No activity

Location: CMT Borrow Area

No activity

Truckloads of cover soil 11/16/15= 23

Total loads placed 124 11/16/15

Location: Area C&D

1/2 pallet of Geocell= 2240 ft2 11/18/15

Total Geocell pallets installed as of 11/18/15= 14 for 73,920ft2

7 truckloads of DGA 11/18/15 6in base and fill for the Geocell for a total of 347 as of end of day 11/18/15.

1 load of rip rap for anchor ditch of geocells 10/17/15

Total of 173 loads for the mix of DGA and gravel

Location: Groundwater Extraction System

No activity

5.0 DISCUSSIONS / MEETINGS

Personnel Involved:	
Location:	
Topics Covered:	

6.0 CQA TESTING PERFORMED ON-SITE

Location:	
Test:	

7.0 COMMENTS / ISSUES / OTHER

8.0 EQUIPMENT ONSITE

JD tractor/disc, Volvo compactor smooth drum, 2 Komatsu 210 excavators, SAKAI compactor sheep's foot, JD excavator 270(removed 9/22/15), Komatsu dozer 39EX, Vermeer wood chipper(removed from site 9/8/15), Komatsu excavator 228, JD skid steer 329E, EXTEC soil screener, Komatsu dozer GPS

equipped(delivered 9/9/15), Off-road (delivered 9/8/15). Loader delivered to Borrow pit 9/14/15. Grader onsite 10/14/15

9.0 PHOTOGRAPHS



DGA/Geocell install C&D




2015.11.18 11:52

FIELD MONITORING REPORT

Project No.:	1302962.CQA	**Project Title:**	OU-3 RA Cover Systems
Location:	Anniston, AL		
Owner:	Solutia, Inc.		
Contractor:	Taylor Corp.		

Date: Thursday, November 19, 2015

1.0 SITE CONDITIONS

Weather Condition:	Clear
Temperature:	66-69
Precipitation:	2.5in on 11/18/15

2.0 HEALTH AND SAFETY

Issues:	What to look for while inspecting equipment

3.0 GOLDER PERSONNEL ON SITE

Name	Time on Site
Shawn Casey	0600 to 1515

4.0 SUMMARY OF ACTIVITIES

Location: Autoclave

No activity

Location: Area E

Pour sign raise 3yds

Tie rebar west limits

Location: PCB Cells

No activity

Day 4 hauling cover soil to PCB cells (on hold)

Golder Associates Inc.
3730 Chamblee Tucker Road
Atlanta, GA 30341 USA
Tel: (770) 496-1893 Fax: (770) 934-9476 www.golder.com

Golder Associates: Operations in Africa, Asia, Australasia, Europe, North America and South America

Golder, Golder Associates and the GA globe design are trademarks of Golder Associates Corporation

Location: Area A

No activity

Location: CMT Borrow Area

Build east rip rap swale on basin

Clearing right of way for fence along southern limits of site

Truckloads of cover soil 11/16/15= 23

Total loads placed 124 11/16/15

Location: Area C&D

2 pallet of Geocell= 8960 ft2 11/18/15

Total Geocell pallets installed as of 11/18/15= 16.5 for 73,920ft2

11 truckloads of DGA 11/19/15 6in base and fill for the Geocell for a total of 358 as of end of day 11/19/15.

1 load of rip rap for anchor ditch of geocells 10/17/15

Total of 173 loads for the mix of DGA and gravel

Location: Groundwater Extraction System

No activity

5.0 DISCUSSIONS / MEETINGS

Personnel Involved:	
Location:	
Topics Covered:	

6.0 CQA TESTING PERFORMED ON-SITE

Location:	
Test:	

7.0 COMMENTS / ISSUES / OTHER

8.0 EQUIPMENT ONSITE

JD tractor/disc, Volvo compactor smooth drum, 2 Komatsu 210 excavators, SAKAI compactor sheep's foot, JD excavator 270(removed 9/22/15), Komatsu dozer 39EX, Vermeer wood chipper(removed from site 9/8/15), Komatsu excavator 228, JD skid steer 329E, EXTEC soil screener, Komatsu dozer GPS equipped(delivered 9/9/15), Off-road (delivered 9/8/15). Loader delivered to Borrow pit 9/14/15. Grader onsite 10/14/15

9.0 PHOTOGRAPHS



6in pipe outlet west limits area E





Outlet pipe for wall area E



Raise sign pour



PCB cells



C&D geocell install



Rip rap install borrow source basin

FIELD MONITORING REPORT

Project No.:	1302962.CQA	**Project Title:**	OU-3 RA Cover Systems
Location:	Anniston, AL		
Owner:	Solutia, Inc.		
Contractor:	Taylor Corp.		

Date: Sunday, November 22, 2015

1.0 SITE CONDITIONS

Weather Condition:	Clear
Temperature:	42 - 50
Precipitation:	None

2.0 HEALTH AND SAFETY

Issues:	Colder weather, be sure to dress appropriately. Be vigilant of ice on roads in the morning

3.0 GOLDER PERSONNEL ON SITE

Name	Time on Site
Patrick Callahan	0730 to 14:30

4.0 SUMMARY OF ACTIVITIES

Location: Autoclave

No activity

Location: Area E

No activity

Location: PCB Cells

Contractor continues to haul in cover soils from CMT Borrow Area. Contractor has now completed a 3-foot access road from the entrance gate to exit. Low-ground pressure dozers are being used to spread cover soil material. Two haul trucks were utilized before approximately 11:00am, however only one was in operation from 11:00 to 14:30.

Work is being done to reinforce entrance and exit haul roads. Stone is brought in and graded to cover muddy/washed out sections.

Golder Associates Inc.
3730 Chamblee Tucker Road
Atlanta, GA 30341 USA
Tel: (770) 496-1893 Fax: (770) 934-9476 www.golder.com

Golder Associates: Operations in Africa, Asia, Australasia, Europe, North America and South America

Golder, Golder Associates and the GA globe design are trademarks of Golder Associates Corporation

Location: Area A

No activity

Location: CMT Borrow Area

No activity

Location: Area C&D

No activity

Location: Groundwater Extraction System

No activity

5.0 DISCUSSIONS / MEETINGS

Personnel Involved:	NA
Location:	NA
Topics Covered:	NA

6.0 CQA TESTING PERFORMED ON-SITE

Location:	NA
Test:	NA

7.0 COMMENTS / ISSUES / OTHER

None

8.0 EQUIPMENT ONSITE

JD tractor/disc, Volvo compactor smooth drum, 2 Komatsu 210 excavators, SAKAI compactor sheep's foot, JD excavator 270(removed 9/22/15), Komatsu dozer 39EX, Vermeer wood chipper(removed from site 9/8/15), Komatsu excavator 228, JD skid steer 329E, EXTEC soil screener, Komatsu dozer GPS equipped(delivered 9/9/15), Off-road (delivered 9/8/15). Loader delivered to Borrow pit 9/14/15. Grader onsite 10/14/15

9.0 PHOTOGRAPHS

None

FIELD MONITORING REPORT

Project No.:	1302962.CQA	**Project Title:**	OU-3 RA Cover Systems
Location:	Anniston, AL		
Owner:	Solutia, Inc.		
Contractor:	Taylor Corp.		

Date: Monday, November 23, 2015

1.0 SITE CONDITIONS

Weather Condition:	Clear
Temperature:	26 - 56
Precipitation:	None

2.0 HEALTH AND SAFETY

Issues:	Be sure to always wear the proper PPE; hi-vis long-sleeves, eye protection, hard hat, and gloves.

3.0 GOLDER PERSONNEL ON SITE

Name	Time on Site
Patrick Callahan	0645 to 1630

4.0 SUMMARY OF ACTIVITIES

Location: Autoclave

No activity

Location: Area E

Concrete Contractor worked to finalize rebar placement and prepared forms for footing pour. The 4-inch ADS outlet pipe is in place at Station 0+00. Taylor verified drain height and confirmed it was within 1/8-inch of design elevation.

At 10:35 first concrete truck on site for footing pout. Terracon is also on site for concrete QA testing (Slump = 2.75", Air = 5.25%, Temp = 74 F). A total of 2 trucks made concrete delivery. Concrete poured in footing from approximately station 1+10 to 0+00.

Location: PCB Cells

Contractor continues to haul in cover soils from CMT Borrow Area. Contractor has now completed a 3-foot access road from the entrance gate to exit. Low-ground pressure dozers are being used to spread

Golder Associates Inc.
3730 Chamblee Tucker Road
Atlanta, GA 30341 USA
Tel: (770) 496-1893 Fax: (770) 934-9476 www.golder.com

Golder Associates: Operations in Africa, Asia, Australasia, Europe, North America and South America

Golder, Golder Associates and the GA globe design are trademarks of Golder Associates Corporation

cover soil material. Cover soils are in place in the Southwest corner of PCB Cells. Contractor is now working east along the south and middle portion of the Cells. One haul truck was in operation.

Work is being done to reinforce entrance and exit haul roads. At least 2 loads of rip-rap is brought in and graded to cover muddy/washed out sections.

Location: Area A

No activity

Location: CMT Borrow Area

No activity

Location: Area C&D

Contractor used 2 workers to install and secure geocells; however, no DGA was placed within geocells. Some work was done to spread DGA material in Southwest corner of Area C&D where water is ponding after heavy rains on 11/18/2015.

Location: Groundwater Extraction System

No activity

5.0 DISCUSSIONS / MEETINGS

Personnel Involved:	NA
Location:	NA
Topics Covered:	NA

6.0 CQA TESTING PERFORMED ON-SITE

Location:	NA
Test:	NA

7.0 COMMENTS / ISSUES / OTHER

None

8.0 EQUIPMENT ONSITE

JD tractor/disc, Volvo compactor smooth drum, 2 Komatsu 210 excavators, SAKAI compactor sheep's foot, JD excavator 270(removed 9/22/15), Komatsu dozer 39EX, Vermeer wood chipper(removed from site 9/8/15), Komatsu excavator 228, JD skid steer 329E, EXTEC soil screener, Komatsu dozer GPS equipped(delivered 9/9/15), Off-road (delivered 9/8/15). Loader delivered to Borrow pit 9/14/15. Grader onsite 10/14/15

9.0 PHOTOGRAPHS



Grading of cover soils (12-inch layer), Southwest corner of PCB Cells



3-foot haul road and dozier pushing cover soils to the east



Installation of rebar and waterstop prior to concrete pour



4-inch drain outlet sitting on top of wall footer at Station 0+00



Pouring and vibrating of concrete footer, approximately Station 1+00



Area C&D geocell and DGA progress; contractor is currently anchoring geocells, but no new DGA has been placed

FIELD MONITORING REPORT

Project No.:	1302962.CQA	**Project Title:**	OU-3 RA Cover Systems
Location:	Anniston, AL		
Owner:	Solutia, Inc.		
Contractor:	Taylor Corp.		

Date: Tuesday, November 24, 2015

1.0 SITE CONDITIONS

Weather Condition:	Clear
Temperature:	30 - 61
Precipitation:	None

2.0 HEALTH AND SAFETY

Issues:	Stay focused on the task at hand

3.0 GOLDER PERSONNEL ON SITE

Name	Time on Site
Patrick Callahan	0645 to 1630

4.0 SUMMARY OF ACTIVITIES

Location: Autoclave

No activity

Location: Area E

At 8:15 Acker Electrical is on site to install two new light pole foundations. Taylor has provided Acker with the target foundation elevation, and depth of augering based on final grade elevation. Taylor and Acker excavated and augered two locations (each location was probed and hand-augered for utility clearance). A 7-foot rebar cage and Sonotube was lowered into the excavation, top of sonotube was surveyed by Taylor.

Location: PCB Cells

Contractor continues to haul in cover soils from CMT Borrow Area. Contractor has now completed a 3-foot access road from the entrance gate to exit and is now working off of road extending east down the middle of the PCB Cells. Low-ground pressure dozers are being used to spread cover soil material.

Golder Associates Inc.
3730 Chamblee Tucker Road
Atlanta, GA 30341 USA
Tel: (770) 496-1893 Fax: (770) 934-9476 www.golder.com

Golder Associates: Operations in Africa, Asia, Australasia, Europe, North America and South America

Golder, Golder Associates and the GA globe design are trademarks of Golder Associates Corporation

After mechanical work, a second haul truck is now in operation (starting at approximately 13:00)

Location: Area A

Contractor is using melting machine to install joint material in Area A contraction and expansion joints. Joints were cleaned out with compresses air prior to applying compound.

Location: CMT Borrow Area

No activity

Location: Area C&D

No activity

Location: Groundwater Extraction System

No activity

5.0 DISCUSSIONS / MEETINGS

Personnel Involved:	Contractor, Solutia, and Golder
Location:	Construction trailer
Topics Covered:	Weekly construction meeting

6.0 CQA TESTING PERFORMED ON-SITE

Location:	NA
Test:	NA

7.0 COMMENTS / ISSUES / OTHER

None

8.0 EQUIPMENT ONSITE

JD tractor/disc, Volvo compactor smooth drum, 2 Komatsu 210 excavators, SAKAI compactor sheep's foot, JD excavator 270(removed 9/22/15), Komatsu dozer 39EX, Vermeer wood chipper(removed from site 9/8/15), Komatsu excavator 228, JD skid steer 329E, EXTEC soil screener, Komatsu dozer GPS equipped(delivered 9/9/15), Off-road (delivered 9/8/15). Loader delivered to Borrow pit 9/14/15. Grader onsite 10/14/15

9.0 PHOTOGRAPHS



Augering for installation of new light pole foundation



Installation of rebar cage



Machine used to apply hot joint sealant at Area A

FIELD MONITORING REPORT

Project No.:	1302962.CQA	**Project Title:**	OU-3 RA Cover Systems
Location:	Anniston, AL		
Owner:	Solutia, Inc.		
Contractor:	Taylor Corp.		

Date: Tuesday, November 30, 2015

1.0 SITE CONDITIONS

Weather Condition:	Clear
Temperature:	62-78
Precipitation:	None

2.0 HEALTH AND SAFETY

Issues:	Equipment check list

3.0 GOLDER PERSONNEL ON SITE

Name	Time on Site
Patrick Callahan	0600 to 1630

4.0 SUMMARY OF ACTIVITIES

Location: Autoclave

Installed top rail of fencing along north limit access road

Location: Area E

No activity

Location: PCB Cells

Contractor continues to haul in cover soils from CMT Borrow Area.

Loads of cover soil for the previous week

11/20/15= 31

Golder Associates Inc.
3730 Chamblee Tucker Road
Atlanta, GA 30341 USA
Tel: (770) 496-1893 Fax: (770) 934-9476 www.golder.com

Golder Associates: Operations in Africa, Asia, Australasia, Europe, North America and South America

Golder, Golder Associates and the GA globe design are trademarks of Golder Associates Corporation

11/21/15=28

11/22/15=32

11/23/15= 27

11/24/15= 44

11/25/15= 48

11/30/15=28

Total loads of cover soil = 362 as of end of day 11/30/15

Total days of hauling cover soil to PCB cells= 11 as of end of day 11/30/15

Location: Area A

Fencing company(Sieberton Fencing Company) installed top rail for fence along north access road

Location: CMT Borrow Area

Screening soil for PCB cover placement

One truck hauling cover material

Location: Area C&D

Total square footage of geocells installed as of 11/30/15 surveyed by Josh= 87,080ft2 which is approx. 54.4% completed

Afternoon started to install geocells where they left off last week approx. 3300ft2 installed 11/30/15

For a total of 90,380ft2 11/30/15

Location: Groundwater Extraction System

No activity

5.0 DISCUSSIONS / MEETINGS

Personnel Involved:	
Location:	
Topics Covered:	

6.0 CQA TESTING PERFORMED ON-SITE

Location:	NA
Test:	NA

7.0 COMMENTS / ISSUES / OTHER

None

8.0 EQUIPMENT ONSITE

JD tractor/disc, Volvo compactor smooth drum, 2 Komatsu 210 excavators, SAKAI compactor sheep's foot, JD excavator 270(removed 9/22/15), Komatsu dozer 39EX, Vermeer wood chipper(removed from site 9/8/15), Komatsu excavator 228, JD skid steer 329E, EXTEC soil screener, Komatsu dozer GPS equipped(delivered 9/9/15), Off-road (delivered 9/8/15). Loader delivered to Borrow pit 9/14/15. Grader onsite 10/14/15

9.0 PHOTOGRAPHS



C&D geocell



Screening cover soil for PCB



Continue 3ft road to SE corner



Continue geocell install C&D



Install top rail along north access road area A

FIELD MONITORING REPORT

Project No.:	1302962.CQA	**Project Title:**	OU-3 RA Cover Systems
Location:	Anniston, AL		
Owner:	Solutia, Inc.		
Contractor:	Taylor Corp.		

Date: Tuesday, November 30, 2015

1.0 SITE CONDITIONS

Weather Condition:	Cloudy mist/light rain
Temperature:	62-73
Precipitation:	2.8in received onsite 12/01/15 thru day and overnight

2.0 HEALTH AND SAFETY

Issues:	Equipment check list

3.0 GOLDER PERSONNEL ON SITE

Name	Time on Site
Patrick Callahan	0600 to 1400

4.0 SUMMARY OF ACTIVITIES

Location: Autoclave

No activity

Location: Area E

No activity

Location: PCB Cells

Contractor continues to haul in cover soils from CMT Borrow Area.

Stop hauling at 1100 because haul roads got to slippery for the off roads to haul safely. Contractor to screen material in the afternoon. Approx 1300 screen broke down got it working again before end of shift

Loads of cover soil for the previous week

Golder Associates Inc.
3730 Chamblee Tucker Road
Atlanta, GA 30341 USA
Tel: (770) 496-1893 Fax: (770) 934-9476 www.golder.com

Golder Associates: Operations in Africa, Asia, Australasia, Europe, North America and South America

Golder, Golder Associates and the GA globe design are trademarks of Golder Associates Corporation

10 loads placed 12/01/15

Total loads of cover soil = 372 as of end of day 12/01/15

Total days of hauling cover soil to PCB cells= 11.5 as of end of day 12/01/15/15

Location: Area A

No activity

Location: CMT Borrow Area

Screening soil for PCB cover placement

One truck hauling cover material

Location: Area C&D

Total square footage of geocells installed as of 11/30/15 surveyed by Josh= 87,080ft2 which is approx. 54.4% completed

No activity

For a total of 90,380ft2 11/30/15

Location: Groundwater Extraction System

No activity

5.0 DISCUSSIONS / MEETINGS

Personnel Involved:	
Location:	
Topics Covered:	

6.0 CQA TESTING PERFORMED ON-SITE

Location:	PCB cells
Test:	Depth checks of cover soil SW corner. 9 tests performed

7.0 COMMENTS / ISSUES / OTHER

None

8.0 EQUIPMENT ONSITE

JD tractor/disc, Volvo compactor smooth drum, 2 Komatsu 210 excavators, SAKAI compactor sheep's foot, JD excavator 270(removed 9/22/15), Komatsu dozer 39EX, Vermeer wood chipper(removed from site 9/8/15), Komatsu excavator 228, JD skid steer 329E, EXTEC soil screener, Komatsu dozer GPS equipped(delivered 9/9/15), Off-road (delivered 9/8/15). Loader delivered to Borrow pit 9/14/15. Grader onsite 10/14/15

9.0 PHOTOGRAPHS



Building road to SE exit PCB cells





Borrow source

FIELD MONITORING REPORT

Project No.:	1302962.CQA	**Project Title:**	OU-3 RA Cover Systems
Location:	Anniston, AL		
Owner:	Solutia, Inc.		
Contractor:	Taylor Corp.		

Date: Tuesday, November 30, 2015

1.0 SITE CONDITIONS

Weather Condition:	PC
Temperature:	53-48
Precipitation:	Early morning rain

2.0 HEALTH AND SAFETY

Issues:	

3.0 GOLDER PERSONNEL ON SITE

Name	Time on Site
Shawn Casey	0700 to 1645

4.0 SUMMARY OF ACTIVITIES

Location: Autoclave

No activity

Location: Area E

No activity

Location: PCB Cells

Pump off water that got blocked by the 3ft access road middle of site

There is some water that got under the liner in the same area that came from the southern anchor trench. Storm water was flowing into the trench very heavily and got under the liner. Nothing to be concerned

Golder Associates Inc.
3730 Chamblee Tucker Road
Atlanta, GA 30341 USA
Tel: (770) 496-1893 Fax: (770) 934-9476 www.golder.com

Golder Associates: Operations in Africa, Asia, Australasia, Europe, North America and South America

Golder, Golder Associates and the GA globe design are trademarks of Golder Associates Corporation

about as this will eventually be blocked off with soil and rip rap. The water under the liner will release to the north once the road is cut out for it to drain

Loads of cover soil for the previous week

10 loads placed 12/01/15

Total loads of cover soil = 372 as of end of day 12/01/15

Total days of hauling cover soil to PCB cells= 11.5 as of end of day 12/01/15/15

Location: Area A

No activity

Location: CMT Borrow Area

No activity

Location: Area C&D

Installing geocells

13,464ft2 installed 12/02/15

For a total of 103,844ft2 12/02/15

DGA loads 11/20/15=20

DGA loads12/02/15=8 for a total of 386 as of 12/02/15

Location: Groundwater Extraction System

Walked HDPE piping looking for defects with Ellis. Sent picture to Kevin of defects in the piping

5.0 DISCUSSIONS / MEETINGS

Personnel Involved:	Golder/Taylor/Solutia
Location:	trailer
Topics Covered:	Weekly meeting

6.0 CQA TESTING PERFORMED ON-SITE

Location:	
Test:	

7.0 COMMENTS / ISSUES / OTHER

None

8.0 EQUIPMENT ONSITE

JD tractor/disc, Volvo compactor smooth drum, 2 Komatsu 210 excavators, SAKAI compactor sheep's foot, JD excavator 270(removed 9/22/15), Komatsu dozer 39EX, Vermeer wood chipper(removed from site 9/8/15), Komatsu excavator 228, JD skid steer 329E, EXTEC soil screener, Komatsu dozer GPS equipped(delivered 9/9/15), Off-road (delivered 9/8/15). Loader delivered to Borrow pit 9/14/15. Grader onsite 10/14/15

9.0 PHOTOGRAPHS



Storm water runoff west exit road



Water blocked of from road above and below liner



Location along anchor trench where storm water got under the liner

3 

Geocell install

FIELD MONITORING REPORT

Project No.:	1302962.CQA	**Project Title:**	OU-3 RA Cover Systems
Location:	Anniston, AL		
Owner:	Solutia, Inc.		
Contractor:	Taylor Corp.		

Date: Thursday, December 03, 2015

1.0 SITE CONDITIONS

Weather Condition:	PC
Temperature:	38-51
Precipitation:	PC to CLR

2.0 HEALTH AND SAFETY

Issues:	

3.0 GOLDER PERSONNEL ON SITE

Name	Time on Site
Shawn Casey	0600 to 1600

4.0 SUMMARY OF ACTIVITIES

Location: Autoclave

No activity

Location: Area E

No activity

Location: PCB Cells

No activity

Loads of cover soil for the previous week

10 loads placed 12/01/15

Total loads of cover soil = 372 as of end of day 12/01/15

Golder Associates Inc.
3730 Chamblee Tucker Road
Atlanta, GA 30341 USA
Tel: (770) 496-1893 Fax: (770) 934-9476 www.golder.com

Golder Associates: Operations in Africa, Asia, Australasia, Europe, North America and South America

Golder, Golder Associates and the GA globe design are trademarks of Golder Associates Corporation

Total days of hauling cover soil to PCB cells= 11.5 as of end of day 12/01/15/15

Location: Area A

Installed fencing along North and east limits and along the north side of the parking lot

Location: CMT Borrow Area

Started screening soil having issues with the excavator it continues to stall

Location: Area C&D

Installing geocells

13,464ft2 installed 12/02/15

For a total of 103,844ft2 12/02/15

DGA loads12/02/15=8 for a total of 386 as of 12/02/15

Location: Groundwater Extraction System

Walked HDPE piping looking for defects with Ellis. Sent picture to Kevin of defects in the piping

5.0 DISCUSSIONS / MEETINGS

Personnel Involved:	
Location:	trailer
Topics Covered:	Weekly meeting

6.0 CQA TESTING PERFORMED ON-SITE

Location:	Borrow source and community recreation center
Test:	Topsoil 3 samples collected

7.0 COMMENTS / ISSUES / OTHER

None

8.0 EQUIPMENT ONSITE

JD tractor/disc, Volvo compactor smooth drum, 2 Komatsu 210 excavators, SAKAI compactor sheep's foot, JD excavator 270(removed 9/22/15), Komatsu dozer 39EX, Vermeer wood chipper(removed from site 9/8/15), Komatsu excavator 228, JD skid steer 329E, EXTEC soil screener, Komatsu dozer GPS equipped(delivered 9/9/15), Off-road (delivered 9/8/15). Loader delivered to Borrow pit 9/14/15. Grader onsite 10/14/15

9.0 PHOTOGRAPHS



Geocell install C&D



Collect topsoil sample TS-3



Collect topsoil sample TS-4





Netting for the fencing installed along north and east limits also along parking lot area A

FIELD MONITORING REPORT

Project No.:	1302962.CQA	**Project Title:**	OU-3 RA Cover Systems
Location:	Anniston, AL		
Owner:	Solutia, Inc.		
Contractor:	Taylor Corp.		

Date: Friday, December 04, 2015

1.0 SITE CONDITIONS

Weather Condition:	PC
Temperature:	35-51
Precipitation:	CLR

2.0 HEALTH AND SAFETY

Issues:	

3.0 GOLDER PERSONNEL ON SITE

Name	Time on Site
Shawn Casey	0800 to 1530

4.0 SUMMARY OF ACTIVITIES

Location: Autoclave

No activity

Location: Area E

No activity

Location: PCB Cells

Excavated out a channel in the 3ft haul road to allow water under the liner to drain. Also tried to pull liner back in the south anchor trench to check for damaged sub-grade but too much water on the liner in the trench so Taylor going to pump off the water tomorrow and see if we can pull it back to take a look

Golder Associates Inc.
3730 Chamblee Tucker Road
Atlanta, GA 30341 USA
Tel: (770) 496-1893 Fax: (770) 934-9476 www.golder.com

Golder Associates: Operations in Africa, Asia, Australasia, Europe, North America and South America

Golder, Golder Associates and the GA globe design are trademarks of Golder Associates Corporation

Walked many areas north of the anchor trench to check for sub-grade damage from the water running under the liner. There is very minimal rutting to the sub-grade there are a couple of spots that may have washed an inch off the sub-grade and the soil is firm to stand on (can't find any soft areas)

Loads of cover soil for the previous week

10 loads placed 12/01/15

Total loads of cover soil = 372 as of end of day 12/01/15

Total days of hauling cover soil to PCB cells= 11.5 as of end of day 12/01/15/15

Location: Area A

Installed barbed wire along North and east limits and along the north side of the parking lot

Location: CMT Borrow Area

Screened soil all day the 3ft haul road needs another day to dry before putting the trucks safely on it

Location: Area C&D

Installing geocells

17,952ft2 installed 12/03/15

For a total of 121,796ft2 12/03/15

DGA loads12/02/15=8 for a total of 386 as of 12/02/15

Location: Groundwater Extraction System

No activity

5.0 DISCUSSIONS / MEETINGS

Personnel Involved:	
Location:	
Topics Covered:	

6.0 CQA TESTING PERFORMED ON-SITE

Location:	
Test:	

7.0 COMMENTS / ISSUES / OTHER

None

8.0 EQUIPMENT ONSITE

JD tractor/disc, Volvo compactor smooth drum, 2 Komatsu 210 excavators, SAKAI compactor sheep's foot, JD excavator 270(removed 9/22/15), Komatsu dozer 39EX, Vermeer wood chipper(removed from site 9/8/15), Komatsu excavator 228, JD skid steer 329E, EXTEC soil screener, Komatsu dozer GPS equipped(delivered 9/9/15), Off-road (delivered 9/8/15). Loader delivered to Borrow pit 9/14/15. Grader onsite 10/14/15

9.0 PHOTOGRAPHS



Screening soil



Geocell install C&D



Excavating out the 3ft road on the PCB cell to allow water to drain from under the liner to the north



Water draining out the north limits that was under liner and blocked off from the road



Water in the anchor trench where it got under the liner. Will pump it out 12/05/15



Geocell install north side of C&D

FIELD MONITORING REPORT

Project No.:	1302962.CQA	**Project Title:**	OU-3 RA Cover Systems
Location:	Anniston, AL		
Owner:	Solutia, Inc.		
Contractor:	Taylor Corp.		

Date: Saturday, December 05, 2015

1.0 SITE CONDITIONS

Weather Condition:	PC
Temperature:	32-64
Precipitation:	CLR

2.0 HEALTH AND SAFETY

Issues:	

3.0 GOLDER PERSONNEL ON SITE

Name	Time on Site
Shawn Casey	0600 to 1430

4.0 SUMMARY OF ACTIVITIES

Location: Autoclave

No activity

Location: Area E

No activity

Location: PCB Cells

Pumped water off the liner in the anchor trench to be able to try and pull liner back to inspect for water damage on the sub-grade at the anchor trench. Taylor managed to pull it back enough too visual inspect. Golder did not see any damage to the existing base grade below liner.

Golder Associates Inc.
3730 Chamblee Tucker Road
Atlanta, GA 30341 USA
Tel: (770) 496-1893 Fax: (770) 934-9476 www.golder.com

Golder Associates: Operations in Africa, Asia, Australasia, Europe, North America and South America

Golder, Golder Associates and the GA globe design are trademarks of Golder Associates Corporation

Contractor had a skid steer delivered to the site to begin filling in the anchor trench with soil to protect the liner in case of another rain event. They began at the low area where it is believed the water got under the liner and will continue until anchor trench is backfilled completely

Loads of cover soil for the previous week

32 loads placed 12/05/15

Total loads of cover soil = 404 as of end of day 12/05/15

Total days of hauling cover soil to PCB cells= 12.5 as of end of day 12/05/15

Location: Area A

No activity

Location: CMT Borrow Area

Screened soil all day and had 2 off road trucks hauling cover soil to PCB area continuing to build 3ft road east side of site

Location: Area C&D

Installing geocells

13,464ft2 installed 12/04/15

For a total of 135,260ft2 12/04/15

DGA loads12/03/15=17 for a total of 403 as of 12/03/15

DGA loads 12/04/15= 22 for a total of 425 as of 12/04/15

Location: Groundwater Extraction System

No activity

5.0 DISCUSSIONS / MEETINGS

Personnel Involved:	
Location:	
Topics Covered:	

6.0 CQA TESTING PERFORMED ON-SITE

Location:	

Test:	

7.0 COMMENTS / ISSUES / OTHER

None

8.0 EQUIPMENT ONSITE

JD tractor/disc, Volvo compactor smooth drum, 2 Komatsu 210 excavators, SAKAI compactor sheep's foot, JD excavator 270(removed 9/22/15), Komatsu dozer 39EX, Vermeer wood chipper(removed from site 9/8/15), Komatsu excavator 228, JD skid steer 329E, EXTEC soil screener, Komatsu dozer GPS equipped(delivered 9/9/15), Off-road (delivered 9/8/15). Loader delivered to Borrow pit 9/14/15. Grader onsite 10/14/15

9.0 PHOTOGRAPHS



Pump off water from anchor trench PCB cells



Showing sub-grade under liner no damage the water is in the trench



Pumped off the water in the trench below the liner and trying to show sub-grade under liner(didn't realize the picture did not take very well). Golder did not see any damage to the sub-grade



Wet are to the right is also the area where water held up under liner. All the water has been drained off to the north limits



Geocell install north side of C&D



Backfilling anchor trench starting with the area it is believed the water got under the liner



Same as above

FIELD MONITORING REPORT

Project No.:	1302962.CQA	**Project Title:**	OU-3 RA Cover Systems
Location:	Anniston, AL		
Owner:	Solutia, Inc.		
Contractor:	Taylor Corp.		

Date: Saturday, December 05, 2015

1.0 SITE CONDITIONS

Weather Condition:	CLR
Temperature:	44-66
Precipitation:	none

2.0 HEALTH AND SAFETY

Issues:	Talked about Taylors's internal safety audit

3.0 GOLDER PERSONNEL ON SITE

Name	Time on Site
Shawn Casey	0600 to 1430

4.0 SUMMARY OF ACTIVITIES

Location: Autoclave

No activity

Location: Area E

No activity

Location: PCB Cells

Completed 3ft road to SE exit of the PCB cells then started to cover south anchor trench working east to west 20 loads placed 12/06/15

Total loads of cover soil = 424 as of end of day 12/06/15

Total days of hauling cover soil to PCB cells= 13.5 as of end of day 12/05/15

Golder Associates Inc.
3730 Chamblee Tucker Road
Atlanta, GA 30341 USA
Tel: (770) 496-1893 Fax: (770) 934-9476 www.golder.com

Golder Associates: Operations in Africa, Asia, Australasia, Europe, North America and South America

Golder, Golder Associates and the GA globe design are trademarks of Golder Associates Corporation

Location: Area A

No activity

Location: CMT Borrow Area

Screened soil all day and had 1 off road truck hauling cover soil to PCB area continuing to build 3ft road east side of site

Location: Area C&D

No activity

8976 ft2 installed 12/05/15

For a total of 144,236ft2 12/05/15

DGA loads 12/04/15= 22 for a total of 425 as of 12/04/15

Location: Groundwater Extraction System

No activity

5.0 DISCUSSIONS / MEETINGS

Personnel Involved:	
Location:	
Topics Covered:	

6.0 CQA TESTING PERFORMED ON-SITE

Location:	
Test:	

7.0 COMMENTS / ISSUES / OTHER

None

8.0 EQUIPMENT ONSITE

JD tractor/disc, Volvo compactor smooth drum, 2 Komatsu 210 excavators, SAKAI compactor sheep's foot, JD excavator 270(removed 9/22/15), Komatsu dozer 39EX, Vermeer wood chipper(removed from site 9/8/15), Komatsu excavator 228, JD skid steer 329E, EXTEC soil screener, Komatsu dozer GPS equipped(delivered 9/9/15), Off-road (delivered 9/8/15). Loader delivered to Borrow pit 9/14/15. Grader onsite 10/14/15

9.0 PHOTOGRAPHS



South anchor trench PCB area being filled in



Screening soil



3ft road completed to SE corner start to cover south anchor trench working west

FIELD MONITORING REPORT

Project No.:	1302962.CQA	**Project Title:**	OU-3 RA Cover Systems
Location:	Anniston, AL		
Owner:	Solutia, Inc.		
Contractor:	Taylor Corp.		

Date: Saturday, December 05, 2015

1.0 SITE CONDITIONS

Weather Condition:	CLR
Temperature:	38-67
Precipitation:	none

2.0 HEALTH AND SAFETY

Issues:	

3.0 GOLDER PERSONNEL ON SITE

Name	Time on Site
Shawn Casey	0800 to 1430

4.0 SUMMARY OF ACTIVITIES

Location: Autoclave

No activity

Location: Area E

Building wall forms for concrete wall NW/West side of area E

Location: PCB Cells

Filled in anchor trench with cover soil all along south limits except for the far SE corner. Also placed cover soil along the west limits to where the rip rap will be installed and built the berm along the south anchor trench SW corner west of the south exit road

Golder Associates Inc.
3730 Chamblee Tucker Road
Atlanta, GA 30341 USA
Tel: (770) 496-1893 Fax: (770) 934-9476 www.golder.com

Golder Associates: Operations in Africa, Asia, Australasia, Europe, North America and South America

Golder, Golder Associates and the GA globe design are trademarks of Golder Associates Corporation

Loads of cover fill 12/7/15=29

Total loads of cover soil = 453 as of end of day 12/07/15

Total days of hauling cover soil to PCB cells= 14.5 as of end of day 12/05/15

Location: Area A

No activity

Location: CMT Borrow Area

Screened soil and had 2 off road trucks hauling cover soil to PCB area. Screen was down for the morning for repairs

Location: Area C&D

7480ft2 ft2 installed 12/07/15

For a total of 151,716ft2 12/07/15

DGA loads 12/07/15= 24 for a total of 449 as of 12/07/15

Location: Groundwater Extraction System

No activity

5.0 DISCUSSIONS / MEETINGS

Personnel Involved:	
Location:	
Topics Covered:	

6.0 CQA TESTING PERFORMED ON-SITE

Location:	
Test:	

7.0 COMMENTS / ISSUES / OTHER

None

8.0 EQUIPMENT ONSITE

JD tractor/disc, Volvo compactor smooth drum, 2 Komatsu 210 excavators, SAKAI compactor sheep's foot, JD excavator 270(removed 9/22/15), Komatsu dozer 39EX, Vermeer wood chipper(removed from

site 9/8/15), Komatsu excavator 228, JD skid steer 329E, EXTEC soil screener, Komatsu dozer GPS equipped(delivered 9/9/15), Off-road (delivered 9/8/15). Loader delivered to Borrow pit 9/14/15. Grader onsite 10/14/15

9.0 PHOTOGRAPHS



Geocell install north limits



Same as above



Building wall forms along NW limits area E



Anchor trench along south limits PCB area



SW corner berm along anchor trench

FIELD MONITORING REPORT

Project No.:	1302962.CQA	**Project Title:**	OU-3 RA Cover Systems
Location:	Anniston, AL		
Owner:	Solutia, Inc.		
Contractor:	Taylor Corp.		

Date: Saturday, December 05, 2015

1.0 SITE CONDITIONS

Weather Condition:	CLR
Temperature:	35-69
Precipitation:	none

2.0 HEALTH AND SAFETY

Issues:	

3.0 GOLDER PERSONNEL ON SITE

Name	Time on Site
Shawn Casey	0800 to 1600

4.0 SUMMARY OF ACTIVITIES

Location: Autoclave

No activity

Location: Area E

Continued building wall forms for concrete wall NW/West side of area E

Location: PCB Cells

Pushing 1ft cover soil from the south exit towards the east.

Contractor did not move any cover soil for approx. 4hr(0100-1400) as the dozer was in the borrow source knocking down the south slope of the pit

Golder Associates Inc.
3730 Chamblee Tucker Road
Atlanta, GA 30341 USA
Tel: (770) 496-1893 Fax: (770) 934-9476 www.golder.com

Golder Associates: Operations in Africa, Asia, Australasia, Europe, North America and South America

Golder, Golder Associates and the GA globe design are trademarks of Golder Associates Corporation

Contractor started to haul the stockpiled topsoil from the borrow source to the SW corner of site b/c the needed the pile moved to con't screening cover soil

Golder informed contractor PH was a little low on the topsoil from the borrow source

Loads of cover fill 12/7/15=11

Total loads of cover soil = 464 as of end of day 12/07/15

Total days of hauling cover soil to PCB cells= 15.5 as of end of day 12/05/15

Topsoil loads 11(1st day of topsoil placement) 12/8/15

Location: Area A

No activity

Location: CMT Borrow Area

Screened soil/knocked down south slope of pit/surveyed floor of borrow source ansd started moving the topsoil to the PCB cells

Location: Area C&D

5984ft2 ft2 installed 12/08/15

For a total of 157,700ft2 12/08/15

DGA loads 12/07/15= 17 for a total of 466 as of 12/08/15

Location: Groundwater Extraction System

Pothole in Area A for the Type 1 flow meter

On the other side of the hwy pothole for the type 2 flow meters near IW13 and could not find the T

The line coming off IW13 has an elbow approx. 10ft east of the well. The pipe is connected to the elbow with metal bands were are were broken when exposed (not broken by Taylor)

Con't to investigate 12/9/15

5.0 DISCUSSIONS / MEETINGS

Personnel Involved:	
Location:	

Topics Covered:	

6.0 CQA TESTING PERFORMED ON-SITE

Location:	PCB/C&D
Test:	Depth checks/particle size/DGA sample VDGA9

7.0 COMMENTS / ISSUES / OTHER

None

8.0 EQUIPMENT ONSITE

JD tractor/disc, Volvo compactor smooth drum, 2 Komatsu 210 excavators, SAKAI compactor sheep's foot, JD excavator 270(removed 9/22/15), Komatsu dozer 39EX, Vermeer wood chipper(removed from site 9/8/15), Komatsu excavator 228, JD skid steer 329E, EXTEC soil screener, Komatsu dozer GPS equipped(delivered 9/9/15), Off-road (delivered 9/8/15). Loader delivered to Borrow pit 9/14/15. Grader onsite 10/14/15

9.0 PHOTOGRAPHS



Dga/geocell placement



Pothole Area A to find piping for type1 vault



Geocell along east limits



Pothole looking for piping near IW13



Existing pipe off IW13 approx 10ft east had broken connecting bands when exposed



First day of topsoil placement



Building wall form west limits area E

FIELD MONITORING REPORT

Project No.:	1302962.CQA	**Project Title:**	OU-3 RA Cover Systems
Location:	Anniston, AL		
Owner:	Solutia, Inc.		
Contractor:	Taylor Corp.		

Date: Wednesday, December 09, 2015

1.0 SITE CONDITIONS

Weather Condition:	CLR
Temperature:	44-70
Precipitation:	none

2.0 HEALTH AND SAFETY

Issues:	

3.0 GOLDER PERSONNEL ON SITE

Name	Time on Site
Shawn Casey	0600 to 1700

4.0 SUMMARY OF ACTIVITIES

Location: Autoclave

No activity

Location: Area E

Con't building wall forms for concrete wall NW/West side of area E

Location: PCB Cells

Loads of cover fill 12/8/15=11

Total loads of cover soil = 464 as of end of day 12/08/15

Total days of hauling cover soil to PCB cells= 17.5 as of end of day 12/08/15

Topsoil loads 56 (2nd day of topsoil placement) 12/8/15= 67 EOD 12/9/15

Golder Associates Inc.
3730 Chamblee Tucker Road
Atlanta, GA 30341 USA
Tel: (770) 496-1893 Fax: (770) 934-9476 www.golder.com

Golder Associates: Operations in Africa, Asia, Australasia, Europe, North America and South America

Golder, Golder Associates and the GA globe design are trademarks of Golder Associates Corporation

Location: Area A

No activity

Location: CMT Borrow Area

Screened soil/knocked down south slope of pit/surveyed floor of borrow source and started moving the topsoil to the PCB cells

Location: Area C&D

No geocell installation Taylor has ordered more material they did not have enough to finish

For a total of 157,700ft2 12/08/15

DGA loads 12/07/15= 12 for a total of 478 as of 12/09/15

Location: Groundwater Extraction System

Continue to pothole near IW13 looking for the GW lines. Found a line that goes off of IW13 to the east for approx. 10ft then turns to the south towards IW2. There was also another line that was cut off approx. 1ft east of the elbow that runs east towards IW10. This line is not active

5.0 DISCUSSIONS / MEETINGS

Personnel Involved:	
Location:	
Topics Covered:	

6.0 CQA TESTING PERFORMED ON-SITE

Location:	PCB/C&D
Test:	Depth checks/particle size/DGA sample VDGA9

7.0 COMMENTS / ISSUES / OTHER

None

8.0 EQUIPMENT ONSITE

JD tractor/disc, Volvo compactor smooth drum, 2 Komatsu 210 excavators, SAKAI compactor sheep's foot, JD excavator 270(removed 9/22/15), Komatsu dozer 39EX, Vermeer wood chipper(removed from site 9/8/15), Komatsu excavator 228, JD skid steer 329E, EXTEC soil screener, Komatsu dozer GPS equipped(delivered 9/9/15), Off-road (delivered 9/8/15). Loader delivered to Borrow pit 9/14/15. Grader onsite 10/14/15

9.0 PHOTOGRAPHS



Topsoil placement SW corner of PCB cells



Forms ready for pour 12/101/15 NW corner of Area E



Showing the elbow approx. 10ft east of IW13 that goes south towards IW2. Also shows the pipe that is cut off which goes to the east towards IW10



Looking north towards IW13 showing the pipe going south off the elbow

FIELD MONITORING REPORT

Project No.:	1302962.CQA	**Project Title:**	OU-3 RA Cover Systems
Location:	Anniston, AL		
Owner:	Solutia, Inc.		
Contractor:	Taylor Corp.		

Date: Thursday, December 10, 2015

1.0 SITE CONDITIONS

Weather Condition:	PC
Temperature:	45-70
Precipitation:	none

2.0 HEALTH AND SAFETY

Issues:	equipment

3.0 GOLDER PERSONNEL ON SITE

Name	Time on Site
Shawn Casey	0600 to 1700

4.0 SUMMARY OF ACTIVITIES

Location: Autoclave

No activity

Location: Area E

Pour 7yds west/NW corner of Area E wall

Location: PCB Cells

Loads of cover fill 12/8/15=11

Total loads of cover soil = 464 as of end of day 12/08/15

Total days of hauling cover soil to PCB cells= 17.5 as of end of day 12/08/15

Topsoil loads 56 (2nd day of topsoil placement) 12/8/15= 67 EOD 12/9/15

Golder Associates Inc.
3730 Chamblee Tucker Road
Atlanta, GA 30341 USA
Tel: (770) 496-1893 Fax: (770) 934-9476 www.golder.com

Golder Associates: Operations in Africa, Asia, Australasia, Europe, North America and South America

Golder, Golder Associates and the GA globe design are trademarks of Golder Associates Corporation

Location: Area A

No activity

Location: CMT Borrow Area

Screened soil/knocked down south slope of pit/surveyed floor of borrow source and started moving the topsoil to the PCB cells

Location: Area C&D

Cont backfilling geocells east limits. Informed dozer operator/Randy there is a couple of areas where the DGA might extend to far for the rip rap

For a total of 157,700ft2 12/08/15

DGA loads 12/07/15= 12 for a total of 490 as of 12/10/15

Location: Groundwater Extraction System

Could not find piping near IW13 that goes across road to the plant. Spoke with Steve he found a different drawing that showed the pipes 109ft west of IW13. Excavated in that area could not find them so the contractor continued east words excavating 2ft deep and probing below. Contractor found 2 pipes approx. 4ft BGS 65ft west of IW13 and 24ft south of the fence line.

The pipes that have been found are 2'10in and 3'6in BGS

Still have not found the 3rd line yet

Also all areas were backfilled except where the 2 pipes are located

5.0 DISCUSSIONS / MEETINGS

Personnel Involved:	
Location:	
Topics Covered:	

6.0 CQA TESTING PERFORMED ON-SITE

Location:	PCB/C&D
Test:	Depth checks/particle size/DGA sample VDGA9

7.0 COMMENTS / ISSUES / OTHER

None

8.0 EQUIPMENT ONSITE

JD tractor/disc, Volvo compactor smooth drum, 2 Komatsu 210 excavators, SAKAI compactor sheep's foot, JD excavator 270(removed 9/22/15), Komatsu dozer 39EX, Vermeer wood chipper(removed from site 9/8/15), Komatsu excavator 228, JD skid steer 329E, EXTEC soil screener, Komatsu dozer GPS equipped(delivered 9/9/15), Off-road (delivered 9/8/15). Loader delivered to Borrow pit 9/14/15. Grader onsite 10/14/15

9.0 PHOTOGRAPHS



Concrete pour NW corner of area E



Placing cover fill west of south exit



Excavating to find pipes that run from IW13&IW10



Cont DGA placement C&D



Two pies located 65ft west of IW13 have not found the 3rd yet



Same as above

FIELD MONITORING REPORT

Project No.:	1302962.CQA	**Project Title:**	OU-3 RA Cover Systems
Location:	Anniston, AL		
Owner:	Solutia, Inc.		
Contractor:	Taylor Corp.		

Date: Thursday, December 10, 2015

1.0 SITE CONDITIONS

Weather Condition:	PC
Temperature:	55-74
Precipitation:	Light drizzle early morning

2.0 HEALTH AND SAFETY

Issues:	Slips trips and falls

3.0 GOLDER PERSONNEL ON SITE

Name	Time on Site
Shawn Casey	0730 to 1600

4.0 SUMMARY OF ACTIVITIES

Location: Autoclave

No activity

Location: Area E

Excavating soil for footer along west limits

Location: PCB Cells

Loads of cover fill 12/10/15=40

Loads of cover fill 12/11/15=42

Total loads of cover soil = 546 as of end of day 12/11/15

Total days of hauling cover soil to PCB cells= 19 as of end of day 12/11/15

Golder Associates Inc.
3730 Chamblee Tucker Road
Atlanta, GA 30341 USA
Tel: (770) 496-1893 Fax: (770) 934-9476 www.golder.com

Golder Associates: Operations in Africa, Asia, Australasia, Europe, North America and South America

Golder, Golder Associates and the GA globe design are trademarks of Golder Associates Corporation

Topsoil loads 56 (2nd day of topsoil placement) 12/8/15= 67 EOD 12/9/15

Location: Area A

Installing fence posts north limits of site

Location: CMT Borrow Area

Screening soil for PCB cells

Location: Area C&D

Continue to place DGA on geocells eas limits

For a total of 157,700ft2 12/08/15

DGA loads 12/07/15= 12 for a total of 490 as of 12/10/15

Location: Groundwater Extraction System

No activity

5.0 DISCUSSIONS / MEETINGS

Personnel Involved:	
Location:	
Topics Covered:	

6.0 CQA TESTING PERFORMED ON-SITE

Location:	
Test:	

7.0 COMMENTS / ISSUES / OTHER

None

8.0 EQUIPMENT ONSITE

JD tractor/disc, Volvo compactor smooth drum, 2 Komatsu 210 excavators, SAKAI compactor sheep's foot, JD excavator 270(removed 9/22/15), Komatsu dozer 39EX, Vermeer wood chipper(removed from site 9/8/15), Komatsu excavator 228, JD skid steer 329E, EXTEC soil screener, Komatsu dozer GPS equipped(delivered 9/9/15), Off-road (delivered 9/8/15). Loader delivered to Borrow pit 9/14/15. Grader onsite 10/14/15

9.0 PHOTOGRAPHS



Cover fill PCB area



Fence post install north limits area A



DGA placement C&D



Anchor trench excavation area E west limits

FIELD MONITORING REPORT

Project No.:	1302962.CQA	**Project Title:**	OU-3 RA Cover Systems
Location:	Anniston, AL		
Owner:	Solutia, Inc.		
Contractor:	Taylor Corp.		

Date: Thursday, December 10, 2015

1.0 SITE CONDITIONS

Weather Condition:	PC
Temperature:	42-70
Precipitation:	Monday was rained out not rain 12/15/15

2.0 HEALTH AND SAFETY

Issues:	

3.0 GOLDER PERSONNEL ON SITE

Name	Time on Site
Shawn Casey	0730 to 1600

4.0 SUMMARY OF ACTIVITIES

Location: Autoclave

No activity

Location: Area E

Excavating soil for footer along west limits

Location: PCB Cells

Loads of cover fill 12/12/15=27

Total loads of cover soil = 573 as of end of day 12/12/15

Total days of hauling cover soil to PCB cells= 20 as of end of day 12/12/15

Topsoil loads 25 (from sports complex) 12/8/15= 95 EOD 12/12/15

Golder Associates Inc.
3730 Chamblee Tucker Road
Atlanta, GA 30341 USA
Tel: (770) 496-1893 Fax: (770) 934-9476 www.golder.com

Golder Associates: Operations in Africa, Asia, Australasia, Europe, North America and South America

Golder, Golder Associates and the GA globe design are trademarks of Golder Associates Corporation

Location: Area A

Installing fence posts north limits of site

Also removed some north of the parking lot on the north side of the newly installed fencing

Location: CMT Borrow Area

Screening soil for PCB cells

Install culvert at the entrance to the borrow source

Location: Area C&D

Rip rap loads total at EOD 12/115/15= 14

For a total of 157,700ft2 12/08/15

DGA loads 12/10/15= 12 for a total of 490 as of 12/10/15

Location: Groundwater Extraction System

No activity

5.0 DISCUSSIONS / MEETINGS

Personnel Involved:	
Location:	
Topics Covered:	

6.0 CQA TESTING PERFORMED ON-SITE

Location:	
Test:	

7.0 COMMENTS / ISSUES / OTHER

None

8.0 EQUIPMENT ONSITE

JD tractor/disc, Volvo compactor smooth drum, 2 Komatsu 210 excavators, SAKAI compactor sheep's foot, JD excavator 270(removed 9/22/15), Komatsu dozer 39EX, Vermeer wood chipper(removed from site 9/8/15), Komatsu excavator 228, JD skid steer 329E, EXTEC soil screener, Komatsu dozer GPS equipped(delivered 9/9/15), Off-road (delivered 9/8/15). Loader delivered to Borrow pit 9/14/15. Grader onsite 10/14/15

9.0 PHOTOGRAPHS



Culvert install at the entrance to borrow source



Rip rap install west side of C&D



Culvert at the entrance to borrow source

FIELD MONITORING REPORT

Project No.:	1302962.CQA	**Project Title:**	OU-3 RA Cover Systems
Location:	Anniston, AL		
Owner:	Solutia, Inc.		
Contractor:	Taylor Corp.		

Date: Wednesday, December 16, 2015

1.0 SITE CONDITIONS

Weather Condition:	Mostly Sunny
Temperature:	42-70
Precipitation:	None

2.0 HEALTH AND SAFETY

Issues:	Lock out, tag out reviewed

3.0 GOLDER PERSONNEL ON SITE

Name	Time on Site
Shawn Casey	0730 to 1300
Patrick Callahan	0900 to 1600

4.0 SUMMARY OF ACTIVITIES

Location: Autoclave

No activity

Location: Area E

Removing wall forms

Location: PCB Cells

Loads of cover fill on placed on PCB Cells = 22; for a total of 595 loads

Total days of hauling cover soil to PCB cells = 21

Loads of topsoil delivered to site = 0; for a total of 95

Golder Associates Inc.
3730 Chamblee Tucker Road
Atlanta, GA 30341 USA
Tel: (770) 496-1893 Fax: (770) 934-9476 www.golder.com

Golder Associates: Operations in Africa, Asia, Australasia, Europe, North America and South America

Golder, Golder Associates and the GA globe design are trademarks of Golder Associates Corporation

Location: Area A

Installing fence posts north of Area A

Location: CMT Borrow Area

Screening soil for PCB cells

Install culvert at the entrance to the borrow source

Location: Area C&D

Rip rap loads delivered to site = 0

DGA loads delivered to site = 1; for a total of 491

Location: Groundwater Extraction System

No activity

5.0 DISCUSSIONS / MEETINGS

Personnel Involved:	OU-3 RA Construction Team
Location:	Construction Trailers
Topics Covered:	Weekly Update

6.0 CQA TESTING PERFORMED ON-SITE

Location:	
Test:	

7.0 COMMENTS / ISSUES / OTHER

None

8.0 EQUIPMENT ONSITE

JD tractor/disc, Volvo compactor smooth drum, 2 Komatsu 210 excavators, SAKAI compactor sheep's foot, JD excavator 270(removed 9/22/15), Komatsu dozer 39EX, Vermeer wood chipper(removed from site 9/8/15), Komatsu excavator 228, JD skid steer 329E, EXTEC soil screener, Komatsu dozer GPS equipped(delivered 9/9/15), Off-road (delivered 9/8/15). Loader delivered to Borrow pit 9/14/15. Grader onsite 10/14/15

9.0 PHOTOGRAPHS



Installation of Riprap anchor along crest of Area C&D



Placement of cover soils on PCB Cells



Removing wall forms at Area E

FIELD MONITORING REPORT

Project No.:	1302962.CQA	**Project Title:**	OU-3 RA Cover Systems
Location:	Anniston, AL		
Owner:	Solutia, Inc.		
Contractor:	Taylor Corp.		

Date: Thursday, December 17, 2015

1.0 SITE CONDITIONS

Weather Condition:	Overcast with rain early morning and previous evening
Temperature:	41-63
Precipitation:	0.12

2.0 HEALTH AND SAFETY

Issues:	Review of OSHA top 10 violations

3.0 GOLDER PERSONNEL ON SITE

Name	Time on Site
Patrick Callahan	06:30 to 1600

4.0 SUMMARY OF ACTIVITIES

Location: Autoclave

No activity

Location: Area E

Acker Electric mobilized to site to place light poles in new location; no work was completed

Location: PCB Cells

No Activity

Loads of cover fill on placed on PCB Cells = 0; for a total of 595 loads

Total days of hauling cover soil to PCB cells = 21

Loads of topsoil delivered to site = 0; for a total of 95

Golder Associates Inc.
3730 Chamblee Tucker Road
Atlanta, GA 30341 USA
Tel: (770) 496-1893 Fax: (770) 934-9476 www.golder.com

Golder Associates: Operations in Africa, Asia, Australasia, Europe, North America and South America

Golder, Golder Associates and the GA globe design are trademarks of Golder Associates Corporation

Location: Area A

Installing fence posts north of Area A

Location: CMT Borrow Area

No screening of soil for PCB cells took place

Complete installation of culvert at the entrance to the borrow source

Location: Area C&D

Installation of crest and toe riprap apron around limits of DGA/Geocells

Rip rap loads delivered to site = 8

DGA loads delivered to site = 9; for a total of 500

Location: Groundwater Extraction System

Aluminum pipe rack system was delivered to site

5.0 DISCUSSIONS / MEETINGS

Personnel Involved:	
Location:	
Topics Covered:	

6.0 CQA TESTING PERFORMED ON-SITE

Location:	
Test:	

7.0 COMMENTS / ISSUES / OTHER

None

8.0 EQUIPMENT ONSITE

JD tractor/disc, Volvo compactor smooth drum, 2 Komatsu 210 excavators, SAKAI compactor sheep's foot, JD excavator 270(removed 9/22/15), Komatsu dozer 39EX, Vermeer wood chipper(removed from site 9/8/15), Komatsu excavator 228, JD skid steer 329E, EXTEC soil screener, Komatsu dozer GPS equipped(delivered 9/9/15), Off-road (delivered 9/8/15). Loader delivered to Borrow pit 9/14/15. Grader onsite 10/14/15

9.0 PHOTOGRAPHS



Aluminum pipe rack delivered to site



Installation of riprap apron around Area C&D



Culvert headwall under CMT Borrow Area access road

FIELD MONITORING REPORT

Project No.:	1302962.CQA	**Project Title:**	OU-3 RA Cover Systems
Location:	Anniston, AL		
Owner:	Solutia, Inc.		
Contractor:	Taylor Corp.		

Date: Friday, December 18, 2015

1.0 SITE CONDITIONS

Weather Condition:	Clear and cold with wind
Temperature:	34-46
Precipitation:	None

2.0 HEALTH AND SAFETY

Issues:	Proper clothing dependent on weather conditions

3.0 GOLDER PERSONNEL ON SITE

Name	Time on Site
Patrick Callahan	0700 to 1630

4.0 SUMMARY OF ACTIVITIES

Location: Autoclave

No activity

Location: Area E

Acker Electric placed light poles on new foundations

Location: PCB Cells

No Activity

Loads of cover fill on placed on PCB Cells = 0; for a total of 595 loads

Total days of hauling cover soil to PCB cells = 21

Loads of topsoil delivered to site = 0; for a total of 95

Golder Associates Inc.
3730 Chamblee Tucker Road
Atlanta, GA 30341 USA
Tel: (770) 496-1893 Fax: (770) 934-9476 www.golder.com

Golder Associates: Operations in Africa, Asia, Australasia, Europe, North America and South America

Golder, Golder Associates and the GA globe design are trademarks of Golder Associates Corporation

Location: Area A

No Activity

Location: CMT Borrow Area

Screening of cover soil for PCB cells

Location: Area C&D

Installation of crest and toe riprap apron around limits of DGA/Geocells

Rip rap loads delivered to site = 6

DGA loads delivered to site = 6; for a total of 506

Location: Groundwater Extraction System

Begin installation of aluminum pipe rack

5.0 DISCUSSIONS / MEETINGS

Personnel Involved:	
Location:	
Topics Covered:	

6.0 CQA TESTING PERFORMED ON-SITE

Location:	
Test:	

7.0 COMMENTS / ISSUES / OTHER

None

8.0 EQUIPMENT ONSITE

JD tractor/disc, Volvo compactor smooth drum, 2 Komatsu 210 excavators, SAKAI compactor sheep's foot, JD excavator 270(removed 9/22/15), Komatsu dozer 39EX, Vermeer wood chipper(removed from site 9/8/15), Komatsu excavator 228, JD skid steer 329E, EXTEC soil screener, Komatsu dozer GPS equipped(delivered 9/9/15), Off-road (delivered 9/8/15). Loader delivered to Borrow pit 9/14/15. Grader onsite 10/14/15

9.0 PHOTOGRAPHS



Installation of pipe rack



Riprap toe at Area C&D

FIELD MONITORING REPORT

Project No.:	1302962.CQA	**Project Title:**	OU-3 RA Cover Systems
Location:	Anniston, AL		
Owner:	Solutia, Inc.		
Contractor:	Taylor Corp.		

Date: Tuesday, January 5, 2016

1.0 SITE CONDITIONS

Weather Condition:	Clear
Temperature:	27 - 47
Precipitation:	None

2.0 HEALTH AND SAFETY

Issues:	Slips, trips and falls

3.0 GOLDER PERSONNEL ON SITE

Name	Time on Site
Patrick Callahan	0700 to 1630

4.0 SUMMARY OF ACTIVITIES

Location: Autoclave

No activity

Location: Area E

Brown continues to form footer around north and east sides of future control building (approximately 120 LF). Formwork is going up, no rebar is currently in place.

Location: PCB Cells

Taylor is spreading 6-inch topsoil layer within the southern half of the PCB cells. Poly sheeting is being placed on top of exposed geocomposite for UV protection.

Loads of cover fill on placed on PCB Cells = 0;

Loads of topsoil delivered to site = 15;

Location: Area A

Golder Associates Inc.
3730 Chamblee Tucker Road
Atlanta, GA 30341 USA
Tel: (770) 496-1893 Fax: (770) 934-9476 www.golder.com

Golder Associates: Operations in Africa, Asia, Australasia, Europe, North America and South America

Golder, Golder Associates and the GA globe design are trademarks of Golder Associates Corporation

No Activity

Location: CMT Borrow Area

No Activity. Screener is not on site.

Location: Area C&D

Drainage ditch along southwestern side of area was surveyed in order to calculate slope along ditch and crest of geocells. Stone is being placed near "low spot" between construction trailers and C&D access road.

Tyler's crew has begun to remove decontamination pad. Riprap and textile is being installed at Area C&D perimeter.

Location: Groundwater Extraction System

Continuing to install ladder tray; installation is nearing completion.

5.0 DISCUSSIONS / MEETINGS

Personnel Involved:	NA
Location:	NA
Topics Covered:	NA

6.0 CQA TESTING PERFORMED ON-SITE

Location:	Survey of crest and drainage ditch in Area C&D to confirm proper drainage
Test:	SW corner of Area C&D, approximately 350' south of the access road along the geocell boundary

7.0 COMMENTS / ISSUES / OTHER

Surveying identified a low spot along the crest of Area C&D and a high spot within the drainage ditch in the vicinity of the decontamination pad. Area will need to be re-graded in order to achieve proper drainage.

8.0 EQUIPMENT ONSITE

JD tractor/disc, Volvo compactor smooth drum, 2 Komatsu 210 excavators, SAKAI compactor sheep's foot, JD excavator 270(removed 9/22/15), Komatsu dozer 39EX, Vermeer wood chipper(removed from site 9/8/15), Komatsu excavator 228, JD skid steer 329E, EXTEC soil screener, Komatsu dozer GPS equipped(delivered 9/9/15), Off-road (delivered 9/8/15). Loader delivered to Borrow pit 9/14/15. Grader onsite 10/14/15

9.0 PHOTOGRAPHS



Photograph 1: Survey of ditch and crest at Area C&D



Photograph 2: Current extent of riprap along boundary of Area C&D



Photograph 3: Installation of formwork, Area E footer

FIELD MONITORING REPORT

Project No.:	1302962.CQA	**Project Title:**	OU-3 RA Cover Systems
Location:	Anniston, AL		
Owner:	Solutia, Inc.		
Contractor:	Taylor Corp.		

Date: Wednesday, January 6, 2016

1.0 SITE CONDITIONS

Weather Condition:	Clear
Temperature:	31 - 53
Precipitation:	None

2.0 HEALTH AND SAFETY

Issues:	Be very cautious while walking over riprap

3.0 GOLDER PERSONNEL ON SITE

Name	Time on Site
Patrick Callahan	0700 to 1630

4.0 SUMMARY OF ACTIVITIES

Location: Autoclave

No activity

Location: Area E

Brown continues to form footer around north and east sides of future control building (approximately 120 LF). Formwork is up and currently placing footer/wall rebar.

Location: PCB Cells

Taylor is spreading 6-inch topsoil layer within the southern half of the PCB cells and placing cover soils. The screener has been returned to site.

Loads of cover fill on placed on PCB Cells = 10;

Loads of topsoil delivered to site = 36;

Location: Area A

Golder Associates Inc.
3730 Chamblee Tucker Road
Atlanta, GA 30341 USA
Tel: (770) 496-1893 Fax: (770) 934-9476 www.golder.com

Golder Associates: Operations in Africa, Asia, Australasia, Europe, North America and South America

Golder, Golder Associates and the GA globe design are trademarks of Golder Associates Corporation

No Activity

Location: CMT Borrow Area

Screening of cover soil

Location: Area C&D

Randy's crew is working to improve drainage around southwest perimeter of Area C&D. Gravel is being placed in ditch low spot near access road, and material is being removed in the vicinity of the decontamination pad. DGA is being placed along crest to raise elevation.

1 load of riprap was delivered to site for Area C&D perimeter.

Location: Groundwater Extraction System

No activity

5.0 DISCUSSIONS / MEETINGS

Personnel Involved:	OU-3 RA Construction Crew
Location:	Construction trailer
Topics Covered:	Weekly progress meeting

6.0 CQA TESTING PERFORMED ON-SITE

Location:	NA
Test:	NA

7.0 COMMENTS / ISSUES / OTHER

Surveying identified a low spot along the crest of Area C&D and a high spot within the drainage ditch in the vicinity of the decontamination pad. Area is being re-graded in order to achieve proper drainage.

Patrick Callahan (Golder) and Ellis Bennett (Taylor) walked Area A to look at vaults. Golder will develop plans to raise vaults without interfering with existing equipment and grates. Golder and Taylor also looked at fence-line along Mansanto Rd; fence will be move off of property line, behind power poles.

8.0 EQUIPMENT ONSITE

JD tractor/disc, Volvo compactor smooth drum, 2 Komatsu 210 excavators, SAKAI compactor sheep's foot, JD excavator 270(removed 9/22/15), Komatsu dozer 39EX, Vermeer wood chipper(removed from site 9/8/15), Komatsu excavator 228, JD skid steer 329E, EXTEC soil screener, Komatsu dozer GPS equipped(delivered 9/9/15), Off-road (delivered 9/8/15). Loader delivered to Borrow pit 9/14/15. Grader onsite 10/14/15

9.0 PHOTOGRAPHS



Photograph 1: Formwork in place in Area E, ready for rebar installation



Photograph 2: Adding material to crest of Area C&D



Photograph 3: Grading ditch in Area C&D, removal of decontamination pad

FIELD MONITORING REPORT

Project No.:	1302962.CQA	**Project Title:**	OU-3 RA Cover Systems
Location:	Anniston, AL		
Owner:	Solutia, Inc.		
Contractor:	Taylor Corp.		

Date: Thursday, January 7, 2016

1.0 SITE CONDITIONS

Weather Condition:	Mostly sunny, warmer.
Temperature:	37 - 61
Precipitation:	Light rain in afternoon.

2.0 HEALTH AND SAFETY

Issues:	Stay back while riprap is being dropped from bucket. Always wear safety glasses

3.0 GOLDER PERSONNEL ON SITE

Name	Time on Site
Patrick Callahan	0700 to 1630

4.0 SUMMARY OF ACTIVITIES

Location: Autoclave

No activity

Location: Area E

Brown continues to form footer around north and east sides of future control building (approximately 120 LF). Formwork is up and currently placing footer/wall rebar and waterstops.

Location: PCB Cells

Taylor is spreading 6-inch topsoil layer within the southeastern portion of the PCB cells. Northern, uncovered portion of cells have been covered with UV-resistant poly.

Loads of cover fill on placed on PCB Cells = 0;

Loads of topsoil delivered to site = 25;

Location: Area A

Golder Associates Inc.
3730 Chamblee Tucker Road
Atlanta, GA 30341 USA
Tel: (770) 496-1893 Fax: (770) 934-9476 www.golder.com

Golder Associates: Operations in Africa, Asia, Australasia, Europe, North America and South America

Golder, Golder Associates and the GA globe design are trademarks of Golder Associates Corporation

No Activity

Location: CMT Borrow Area

Removal of silt built up within sediment detention basin

Location: Area C&D

No Activity

Location: Groundwater Extraction System

No activity

5.0 DISCUSSIONS / MEETINGS

Personnel Involved:	NA
Location:	NA
Topics Covered:	NA

6.0 CQA TESTING PERFORMED ON-SITE

Location:	NA
Test:	NA

7.0 COMMENTS / ISSUES / OTHER

None

8.0 EQUIPMENT ONSITE

JD tractor/disc, Volvo compactor smooth drum, 2 Komatsu 210 excavators, SAKAI compactor sheep's foot, JD excavator 270(removed 9/22/15), Komatsu dozer 39EX, Vermeer wood chipper(removed from site 9/8/15), Komatsu excavator 228, JD skid steer 329E, EXTEC soil screener, Komatsu dozer GPS equipped(delivered 9/9/15), Off-road (delivered 9/8/15). Loader delivered to Borrow pit 9/14/15. Grader onsite 10/14/15

9.0 PHOTOGRAPHS



Photograph 1: Formwork in place in Area E, beginning to install rebar



Photograph 2: Spreading topsoil on PCB cells.



Photograph 3: Extent of cover/topsoil on PCB Cells (SE corner)

FIELD MONITORING REPORT

Project No.:	1302962.CQA	**Project Title:**	OU-3 RA Cover Systems
Location:	Anniston, AL		
Owner:	Solutia, Inc.		
Contractor:	Taylor Corp.		

Date: Friday, January 8, 2016

1.0 SITE CONDITIONS

Weather Condition:	Mostly cloudy, warmer.
Temperature:	48 - 58
Precipitation:	Light rain (0.01")

2.0 HEALTH AND SAFETY

Issues:	Be aware of lightening, take cover for at least 30 minutes in the event of lightening

3.0 GOLDER PERSONNEL ON SITE

Name	Time on Site
Patrick Callahan	0700 to 1630

4.0 SUMMARY OF ACTIVITIES

Location: Autoclave

No activity

Location: Area E

Brown continues to form footer around north and east sides of future control building (approximately 120 LF). Formwork is up and currently placing footer/wall rebar and waterstops.

Location: PCB Cells

Taylor is spreading 6-inch topsoil layer within the southeastern portion of the PCB cells and placing cover soil. Northern, uncovered portion of cells have been covered with UV-resistant poly.

Loads of cover fill on placed on PCB Cells = 24;

Loads of topsoil delivered to site = 0;

Location: Area A

Golder Associates Inc.
3730 Chamblee Tucker Road
Atlanta, GA 30341 USA
Tel: (770) 496-1893 Fax: (770) 934-9476 www.golder.com

Golder Associates: Operations in Africa, Asia, Australasia, Europe, North America and South America

Golder, Golder Associates and the GA globe design are trademarks of Golder Associates Corporation

No Activity

Location: CMT Borrow Area

Screening of cover soil

Location: Area C&D

No Activity

Location: Groundwater Extraction System

Randy's crew has begun to install U–bolts along the pipe rack.

5.0 DISCUSSIONS / MEETINGS

Personnel Involved:	NA
Location:	NA
Topics Covered:	NA

6.0 CQA TESTING PERFORMED ON-SITE

Location:	NA
Test:	NA

7.0 COMMENTS / ISSUES / OTHER

None

8.0 EQUIPMENT ONSITE

JD tractor/disc, Volvo compactor smooth drum, 2 Komatsu 210 excavators, SAKAI compactor sheep's foot, JD excavator 270(removed 9/22/15), Komatsu dozer 39EX, Vermeer wood chipper(removed from site 9/8/15), Komatsu excavator 228, JD skid steer 329E, EXTEC soil screener, Komatsu dozer GPS equipped(delivered 9/9/15), Off-road (delivered 9/8/15). Loader delivered to Borrow pit 9/14/15. Grader onsite 10/14/15

9.0 PHOTOGRAPHS



Photograph 1: Sediment detention basin after mucking out silt



Photograph 2: View of CMT Borrow Area



Photograph 3: Placing of cover soil (note: geocomposite is covered with poly to resist UV)

FIELD MONITORING REPORT

Project No.:	1302962.CQA	**Project Title:**	OU-3 RA Cover Systems
Location:	Anniston, AL		
Owner:	Solutia, Inc.		
Contractor:	Taylor Corp.		

Date: Monday, January 11, 2016

1.0 SITE CONDITIONS

Weather Condition:	Clear / Mostly sunny, cooler.
Temperature:	21 - 46
Precipitation:	None (light rain over the weekend)

2.0 HEALTH AND SAFETY

Issues:	Always check in and out with the guard each shift

3.0 GOLDER PERSONNEL ON SITE

Name	Time on Site
Patrick Callahan	0700 to 1630

4.0 SUMMARY OF ACTIVITIES

Location: Autoclave

No activity

Location: Area E

Brown has completed the footer around north and east sides of future control building (approximately 120 LF). Formwork and rebar is up and have been measured. Pour is scheduled for 1/12/2016

Location: PCB Cells

Taylor is spreading 6-inch topsoil layer within the southeastern portion of the PCB cells and placing cover soil. Northern, uncovered portion of cells have been covered with UV-resistant poly.

Loads of cover fill on placed on PCB Cells = 18 (20 loads and 0 loads placed on Saturday and Sunday, respectively);

Loads of topsoil delivered to site = 0;

Golder Associates Inc.
3730 Chamblee Tucker Road
Atlanta, GA 30341 USA
Tel: (770) 496-1893 Fax: (770) 934-9476 www.golder.com

Golder Associates: Operations in Africa, Asia, Australasia, Europe, North America and South America

Golder, Golder Associates and the GA globe design are trademarks of Golder Associates Corporation

Location: Area A

No Activity

Location: CMT Borrow Area

Screening of cover soil

Location: Area C&D

No Activity

Location: Groundwater Extraction System

Randy's crew continues installing U–bolts along the pipe rack. An offset is used while installing the bolts for "pre-snaking" of the pipe based on temperature of the pipe.

5.0 DISCUSSIONS / MEETINGS

Personnel Involved:	NA
Location:	NA
Topics Covered:	NA

6.0 CQA TESTING PERFORMED ON-SITE

Location:	NA
Test:	NA

7.0 COMMENTS / ISSUES / OTHER

None

8.0 EQUIPMENT ONSITE

JD tractor/disc, Volvo compactor smooth drum, 2 Komatsu 210 excavators, SAKAI compactor sheep's foot, JD excavator 270(removed 9/22/15), Komatsu dozer 39EX, Vermeer wood chipper(removed from site 9/8/15), Komatsu excavator 228, JD skid steer 329E, EXTEC soil screener, Komatsu dozer GPS equipped(delivered 9/9/15), Off-road (delivered 9/8/15). Loader delivered to Borrow pit 9/14/15. Grader onsite 10/14/15

9.0 PHOTOGRAPHS



Photograph 1: Bolting of pipe along aluminum pipe rack (note: pipe is pre-snaked)



Photograph 2: View of U-bolts



Photograph 3: Footer with rebar and waterstop at Area E



Photograph 4: Measurement of footer width (2-feet) and rebar (12-inches O.C.) at Area E

FIELD MONITORING REPORT

Project No.:	1302962.CQA	**Project Title:**	OU-3 RA Cover Systems
Location:	Anniston, AL		
Owner:	Solutia, Inc.		
Contractor:	Taylor Corp.		

Date: Tuesday, January 12, 2016

1.0 SITE CONDITIONS

Weather Condition:	Clear, cooler.
Temperature:	22 - 54
Precipitation:	None

2.0 HEALTH AND SAFETY

Issues:	Dress appropriately for cold weather

3.0 GOLDER PERSONNEL ON SITE

Name	Time on Site
Patrick Callahan	0700 to 1630
Steve Moeller	0900 To 1630

4.0 SUMMARY OF ACTIVITIES

Location: Autoclave

No activity

Location: Area E

The footer around north and east sides of future control building is being poured (approximately 120 LF), as well as northeast corner between existing curb and new wall.

Location: PCB Cells

Taylor is spreading 6-inch topsoil layer within the southeastern portion of the PCB cells and placing cover soil. Southern half of PCB cells is now covered. Northern, uncovered portion of cells have been covered with UV-resistant poly.

Randy's crew is placing textile and riprap around southern half of PCB cells for berm protection.

Golder Associates Inc.
3730 Chamblee Tucker Road
Atlanta, GA 30341 USA
Tel: (770) 496-1893 Fax: (770) 934-9476 www.golder.com

Golder Associates: Operations in Africa, Asia, Australasia, Europe, North America and South America

Golder, Golder Associates and the GA globe design are trademarks of Golder Associates Corporation

Loads of cover fill on placed on PCB Cells = 9;

Loads of topsoil delivered to site = 0;

Location: Area A

No Activity

Location: CMT Borrow Area

Screening of cover soil

Location: Area C&D

No Activity

Location: Groundwater Extraction System

No Activity

5.0 DISCUSSIONS / MEETINGS

Personnel Involved:	NA
Location:	NA
Topics Covered:	NA

6.0 CQA TESTING PERFORMED ON-SITE

Location:	Depth checks of cover soil and topsoil on PCB cells Area E footer (along N and E side of control room)
Test:	Check depth to ensure 12-inch cover soil and 6-inch topsoil Concrete conformance testing (slump, air entrainment, and cylinders)

7.0 COMMENTS / ISSUES / OTHER

None

8.0 EQUIPMENT ONSITE

JD tractor/disc, Volvo compactor smooth drum, 2 Komatsu 210 excavators, SAKAI compactor sheep's foot, JD excavator 270(removed 9/22/15), Komatsu dozer 39EX, Vermeer wood chipper(removed from site 9/8/15), Komatsu excavator 228, JD skid steer 329E, EXTEC soil screener, Komatsu dozer GPS equipped(delivered 9/9/15), Off-road (delivered 9/8/15). Loader delivered to Borrow pit 9/14/15. Grader onsite 10/14/15

9.0 PHOTOGRAPHS



Photograph 1: Pouring footer, Area E



Photograph 2: View of U-bolts



Photograph 3: Pouring northeast corner of Area E, outside of wall



Photograph 4: Placing textile and riprap along berm, south side of PCB Cells



Photograph 5: Placing textile and riprap along berm, south side of PCB Cells



Photograph 6: Extent of soil cover, south half of PCB Cells

FIELD MONITORING REPORT

Project No.:	1302962.CQA	**Project Title:**	OU-3 RA Cover Systems
Location:	Anniston, AL		
Owner:	Solutia, Inc.		
Contractor:	Taylor Corp.		

Date: Wednesday, January 13, 2016

1.0 SITE CONDITIONS

Weather Condition:	Clear, cooler.
Temperature:	26 - 51
Precipitation:	None

2.0 HEALTH AND SAFETY

Issues:	Beware of overhead hazards

3.0 GOLDER PERSONNEL ON SITE

Name	Time on Site
Patrick Callahan	0700 to 1630
Steve Moeller	0700 To 1630

4.0 SUMMARY OF ACTIVITIES

Location: Autoclave

No activity

Location: Area E

Prepping for formwork of wall around north and east sides of future control building (approximately 120 LF).

Location: PCB Cells

Taylor is spreading 6-inch topsoil layer within the southeastern portion of the PCB cells. Northern, uncovered portion of cells have been covered with UV-resistant poly.

Randy's crew is placing textile and riprap around southern half of PCB cells for berm protection.

Loads of cover fill on placed on PCB Cells = 0;

Golder Associates Inc.
3730 Chamblee Tucker Road
Atlanta, GA 30341 USA
Tel: (770) 496-1893 Fax: (770) 934-9476 www.golder.com

Golder Associates: Operations in Africa, Asia, Australasia, Europe, North America and South America

Golder, Golder Associates and the GA globe design are trademarks of Golder Associates Corporation

Loads of topsoil delivered to site = 19;

Location: Area A

No Activity

Location: CMT Borrow Area

No Activity, screen is currently down.

Location: Area C&D

No Activity

Location: Groundwater Extraction System

No Activity

5.0 DISCUSSIONS / MEETINGS

Personnel Involved:	OU-3 RA Construction Team
Location:	Construction Trailer
Topics Covered:	Weekly Update

6.0 CQA TESTING PERFORMED ON-SITE

Location:	NA
Test:	NA

7.0 COMMENTS / ISSUES / OTHER

None

8.0 EQUIPMENT ONSITE

JD tractor/disc, Volvo compactor smooth drum, 2 Komatsu 210 excavators, SAKAI compactor sheep's foot, JD excavator 270(removed 9/22/15), Komatsu dozer 39EX, Vermeer wood chipper(removed from site 9/8/15), Komatsu excavator 228, JD skid steer 329E, EXTEC soil screener, Komatsu dozer GPS equipped(delivered 9/9/15), Off-road (delivered 9/8/15). Loader delivered to Borrow pit 9/14/15. Grader onsite 10/14/15

9.0 PHOTOGRAPHS



Photograph 1: Spreading topsoil, PCB Cells



Photograph 2: Extent of topsoil placement, PCB Cells

FIELD MONITORING REPORT

Project No.:	1302962.CQA	**Project Title:**	OU-3 RA Cover Systems
Location:	Anniston, AL		
Owner:	Solutia, Inc.		
Contractor:	Taylor Corp.		

Date: Thursday, January 14, 2016

1.0 SITE CONDITIONS

Weather Condition:	Clear, warmer in afternoon.
Temperature:	27 - 62
Precipitation:	None

2.0 HEALTH AND SAFETY

Issues:	Beware of overhead hazards

3.0 GOLDER PERSONNEL ON SITE

Name	Time on Site
Patrick Callahan	0700 to 1630
Steve Moeller	0700 To 1630

4.0 SUMMARY OF ACTIVITIES

Location: Autoclave

No activity

Location: Area E

Prepping for formwork of wall around north and east sides of future control building (approximately 120 LF).

Location: PCB Cells

Southern half of PCB Cells are being hydroseeded today. Subcontractor has confirmed that seed mix is "ALDOT Winter, frequent mowing mix".

Loads of cover fill on placed on PCB Cells = 0;

Loads of topsoil delivered to site = 17;

Golder Associates Inc.
3730 Chamblee Tucker Road
Atlanta, GA 30341 USA
Tel: (770) 496-1893 Fax: (770) 934-9476 www.golder.com

Golder Associates: Operations in Africa, Asia, Australasia, Europe, North America and South America

Golder, Golder Associates and the GA globe design are trademarks of Golder Associates Corporation

Location: Area A

No Activity

Location: CMT Borrow Area

No Activity

Location: Area C&D

No Activity

Location: Groundwater Extraction System

Randy's crew is currently beginning work at property north of the plant site (IW-26 and IW-27). Foundation for carbon treatment enclosure is being prepped and compacted. Conduit and conveyance pipe are stubbed out. Vaults have been delivered to site.

5.0 DISCUSSIONS / MEETINGS

Personnel Involved:	NA
Location:	NA
Topics Covered:	NA

6.0 CQA TESTING PERFORMED ON-SITE

Location:	NA
Test:	NA

7.0 COMMENTS / ISSUES / OTHER

None

8.0 EQUIPMENT ONSITE

JD tractor/disc, Volvo compactor smooth drum, 2 Komatsu 210 excavators, SAKAI compactor sheep's foot, JD excavator 270(removed 9/22/15), Komatsu dozer 39EX, Vermeer wood chipper(removed from site 9/8/15), Komatsu excavator 228, JD skid steer 329E, EXTEC soil screener, Komatsu dozer GPS equipped(delivered 9/9/15), Off-road (delivered 9/8/15). Loader delivered to Borrow pit 9/14/15. Grader onsite 10/14/15

9.0 PHOTOGRAPHS



Photograph 1: Prepping foundation for carbon treatment enclosure



Photograph 2: Application of straw after seeding



Photograph 3: Application of straw after seeding



Photograph 4: Stubbing out conduit for running electrical between enclosure and IW-26 and IW-27

FIELD MONITORING REPORT

Project No.:	1302962.CQA	**Project Title:**	OU-3 RA Cover Systems
Location:	Anniston, AL		
Owner:	Solutia, Inc.		
Contractor:	Taylor Corp.		

Date: Monday, January 18, 2016

1.0 SITE CONDITIONS

Weather Condition:	Partly cloudy, cooler.
Temperature:	20 - 38
Precipitation:	None

2.0 HEALTH AND SAFETY

Issues:	Beware of overhead hazards

3.0 GOLDER PERSONNEL ON SITE

Name	Time on Site
Patrick Callahan	0700 to 1630

4.0 SUMMARY OF ACTIVITIES

Location: Autoclave

No activity

Location: Area E

Formwork and rebar installation at wall around north and east sides of future control building (approximately 120 LF).

Location: PCB Cells

Placing of cover soil along northeastern side of PCB Cells.; Taylor has started to wreck out access road along middle of cells.

Southern half of PCB Cells have been hydroseeded. Subcontractor has confirmed that seed mix is "ALDOT Winter, frequent mowing mix". Straw cover is being spread by hand.

Loads of cover fill on placed on PCB Cells = 17 (no cover soil moved 1/13 – 1/17, heavy rain on 1/15, light rain on 1/17);

Golder Associates Inc.
3730 Chamblee Tucker Road
Atlanta, GA 30341 USA
Tel: (770) 496-1893 Fax: (770) 934-9476 www.golder.com

Golder Associates: Operations in Africa, Asia, Australasia, Europe, North America and South America

Golder, Golder Associates and the GA globe design are trademarks of Golder Associates Corporation

Loads of topsoil delivered to site = 17;

Location: Area A

No Activity

Location: CMT Borrow Area

Screening cover soils.

Location: Area C&D

No Activity

Location: Groundwater Extraction System

Randy's crew is currently beginning work at property north of the plant site (IW-26 and IW-27). Excavation around wells and installation of well vaults. Carbon treatment enclosure was installed and delivered to site on 1/15.

5.0 DISCUSSIONS / MEETINGS

Personnel Involved:	Steve, Kevin, Patrick
Location:	IW26 and IW27
Topics Covered:	Golder has approved Taylor to orient the vaults so they will be facing each other. A second hole will be drilled in each vault to pass the conveyance line through the concrete, rather than over-excavating and running the line under the vault. Conveyance line will extend from each vault and join together into one excavation towards the treatment shed.

6.0 CQA TESTING PERFORMED ON-SITE

Location:	NA
Test:	NA

7.0 COMMENTS / ISSUES / OTHER

None

8.0 EQUIPMENT ONSITE

JD tractor/disc, Volvo compactor smooth drum, 2 Komatsu 210 excavators, SAKAI compactor sheep's foot, JD excavator 270(removed 9/22/15), Komatsu dozer 39EX, Vermeer wood chipper(removed from site 9/8/15), Komatsu excavator 228, JD skid steer 329E, EXTEC soil screener, Komatsu dozer GPS equipped(delivered 9/9/15), Off-road (delivered 9/8/15). Loader delivered to Borrow pit 9/14/15. Grader onsite 10/14/15

9.0 PHOTOGRAPHS



Photograph 1: Installed carbon treatment enclosure



Photograph 2: Excavation and installation of well vault at IW-26



Photograph 3: Application of straw after seeding



Photograph 4: Spreading cover soil along northeast side of PCB Cells

FIELD MONITORING REPORT

Project No.:	1302962.CQA	**Project Title:**	OU-3 RA Cover Systems
Location:	Anniston, AL		
Owner:	Solutia, Inc.		
Contractor:	Taylor Corp.		

Date: Wednesday, January 20, 2016

1.0 SITE CONDITIONS

Weather Condition:	Mostly cloudy.
Temperature:	33 - 47
Precipitation:	Light rain in the evening

2.0 HEALTH AND SAFETY

Issues:	Proper PPE

3.0 GOLDER PERSONNEL ON SITE

Name	Time on Site
Patrick Callahan	0700 to 1630

4.0 SUMMARY OF ACTIVITIES

Location: Autoclave

No activity

Location: Area E

Formwork and rebar installation at wall around north and east sides of future control building (approximately 120 LF).

Location: PCB Cells

Placing of cover soil along northeastern side of PCB Cells; Taylor has started to wreck out access road along middle of cells.

Loads of cover fill on placed on PCB Cells = 7 (20 loads delivered on 1/19);

Loads of topsoil delivered to site = 20;

Location: Area A

Golder Associates Inc.
3730 Chamblee Tucker Road
Atlanta, GA 30341 USA
Tel: (770) 496-1893 Fax: (770) 934-9476 www.golder.com

Golder Associates: Operations in Africa, Asia, Australasia, Europe, North America and South America

Golder, Golder Associates and the GA globe design are trademarks of Golder Associates Corporation

No Activity

Location: CMT Borrow Area

Screening cover soils

Location: Area C&D

No Activity

Location: Groundwater Extraction System

Randy's crew is currently working at property north of the plant site (IW-26 and IW-27). Excavation for installation of conduit and conveyance piping between enclosure and well vaults.

5.0 DISCUSSIONS / MEETINGS

Personnel Involved:	OU-3 RA Construction Team
Location:	Construction Trailer
Topics Covered:	Weekly progress meeting

6.0 CQA TESTING PERFORMED ON-SITE

Location:	NA
Test:	NA

7.0 COMMENTS / ISSUES / OTHER

None

8.0 EQUIPMENT ONSITE

JD tractor/disc, Volvo compactor smooth drum, 2 Komatsu 210 excavators, SAKAI compactor sheep's foot, JD excavator 270(removed 9/22/15), Komatsu dozer 39EX, Vermeer wood chipper(removed from site 9/8/15), Komatsu excavator 228, JD skid steer 329E, EXTEC soil screener, Komatsu dozer GPS equipped(delivered 9/9/15), Off-road (delivered 9/8/15). Loader delivered to Borrow pit 9/14/15. Grader onsite 10/14/15

9.0 PHOTOGRAPHS



Photograph 1: Limits of cover soil placement, PCB Cells



Photograph 2: Wall forms, Area E



Photograph 3: Wall forms and rebar, Area E



Photograph 4: Excavation for installation of conduit and conveyance piping between enclosure and well vaults.



Photograph 5: Excavation for installation of conduit and conveyance piping between enclosure and well vaults.

FIELD MONITORING REPORT

Project No.:	1302962.CQA	**Project Title:**	OU-3 RA Cover Systems
Location:	Anniston, AL		
Owner:	Solutia, Inc.		
Contractor:	Taylor Corp.		

Date: Thursday, January 21, 2016

1.0 SITE CONDITIONS

Weather Condition:	Mostly cloudy.
Temperature:	42 - 52
Precipitation:	Rain in the afternoon (0.59), heavy rain expected Fri-Sat

2.0 HEALTH AND SAFETY

Issues:	Slips, trips, and falls in wet areas

3.0 GOLDER PERSONNEL ON SITE

Name	Time on Site
Patrick Callahan	0700 to 1630

4.0 SUMMARY OF ACTIVITIES

Location: Autoclave

No activity

Location: Area E

Formwork and rebar installation at wall around north and east sides of future control building (approximately 120 LF).

Location: PCB Cells

No Activity

Loads of cover fill on placed on PCB Cells = 0;

Loads of topsoil delivered to site = 0;

Location: Area A

Golder Associates Inc.
3730 Chamblee Tucker Road
Atlanta, GA 30341 USA
Tel: (770) 496-1893 Fax: (770) 934-9476 www.golder.com

Golder Associates: Operations in Africa, Asia, Australasia, Europe, North America and South America

Golder, Golder Associates and the GA globe design are trademarks of Golder Associates Corporation

No Activity

Location: CMT Borrow Area

No Activity

Location: Area C&D

Tyler's crew is working to widen ditch (15-feet), excavate ditch, and install riprap along south and east sides of Area. 10 oz fabric is being placed under all riprap. The ditchline is being surveyed by Taylor to ensure proper grade.

Location: Groundwater Extraction System

No Activity

5.0 DISCUSSIONS / MEETINGS

Personnel Involved:	NA
Location:	NA
Topics Covered:	NA

6.0 CQA TESTING PERFORMED ON-SITE

Location:	NA
Test:	NA

7.0 COMMENTS / ISSUES / OTHER

None

8.0 EQUIPMENT ONSITE

JD tractor/disc, Volvo compactor smooth drum, 2 Komatsu 210 excavators, SAKAI compactor sheep's foot, JD excavator 270(removed 9/22/15), Komatsu dozer 39EX, Vermeer wood chipper(removed from site 9/8/15), Komatsu excavator 228, JD skid steer 329E, EXTEC soil screener, Komatsu dozer GPS equipped(delivered 9/9/15), Off-road (delivered 9/8/15). Loader delivered to Borrow pit 9/14/15. Grader onsite 10/14/15

9.0 PHOTOGRAPHS



Photograph 1: grading ditch along perimeter of C&D



Photograph 2: grading ditch along perimeter of C&D



Photograph 3: grading ditch along perimeter of C&D



Photograph 4: Placing textile and riprap within ditch along perimeter of C&D

FIELD MONITORING REPORT

Project No.:	1302962.CQA	**Project Title:**	OU-3 RA Cover Systems
Location:	Anniston, AL		
Owner:	Solutia, Inc.		
Contractor:	Taylor Corp.		

Date: Monday, January 25, 2016

1.0 SITE CONDITIONS

Weather Condition:	Mostly sunny.
Temperature:	21 - 67
Precipitation:	None

2.0 HEALTH AND SAFETY

Issues:	Slips, trips, and falls in wet areas

3.0 GOLDER PERSONNEL ON SITE

Name	Time on Site
Patrick Callahan	0745 to 1630

4.0 SUMMARY OF ACTIVITIES

Location: Autoclave

No activity

Location: Area E

Pour is scheduled today for Area E retaining wall (north and east section of wall along future control building).

Location: PCB Cells

Material is being spread out from the access road.

Loads of cover fill on placed on PCB Cells = 0;

Loads of topsoil delivered to site = 0;

Location: Area A

Golder Associates Inc.
3730 Chamblee Tucker Road
Atlanta, GA 30341 USA
Tel: (770) 496-1893 Fax: (770) 934-9476 www.golder.com

Golder Associates: Operations in Africa, Asia, Australasia, Europe, North America and South America

Golder, Golder Associates and the GA globe design are trademarks of Golder Associates Corporation

No Activity

Location: CMT Borrow Area

No Activity

Location: Area C&D

Tyler's crew is working to install riprap filter ring outside of concrete inlet.

Location: Groundwater Extraction System

Randy's crew excavated and hammed obstructions along the pipe alignment, from vaults to AWWSB tie-in.

5.0 DISCUSSIONS / MEETINGS

Personnel Involved:	NA
Location:	NA
Topics Covered:	NA

6.0 CQA TESTING PERFORMED ON-SITE

Location:	Area E wall (north and east sides of future control building)
Test:	Concrete conformance testing (slump, air entrainment, and cylinders)

7.0 COMMENTS / ISSUES / OTHER

None

8.0 EQUIPMENT ONSITE

JD tractor/disc, Volvo compactor smooth drum, 2 Komatsu 210 excavators, SAKAI compactor sheep's foot, JD excavator 270(removed 9/22/15), Komatsu dozer 39EX, Vermeer wood chipper(removed from site 9/8/15), Komatsu excavator 228, JD skid steer 329E, EXTEC soil screener, Komatsu dozer GPS equipped(delivered 9/9/15), Off-road (delivered 9/8/15). Loader delivered to Borrow pit 9/14/15. Grader onsite 10/14/15

9.0 PHOTOGRAPHS



Photograph 1: Formwork and rebar in place with Area E retaining wall



Photograph 2: Begin pumping concrete



Photograph 3: Installation of riprap filter ring outside of concrete inlet

FIELD MONITORING REPORT

Project No.:	1302962.CQA	**Project Title:**	OU-3 RA Cover Systems
Location:	Anniston, AL		
Owner:	Solutia, Inc.		
Contractor:	Taylor Corp.		

Date: Wednesday, January 27, 2016

1.0 SITE CONDITIONS

Weather Condition:	Mostly cloudy
Temperature:	35-52
Precipitation:	Scattered showers

2.0 HEALTH AND SAFETY

Issues:	PPE

3.0 GOLDER PERSONNEL ON SITE

Name	Time on Site
Patrick Callahan	0745 to 1630

4.0 SUMMARY OF ACTIVITIES

Location: Autoclave

No activity

Location: Area E

No activity

Location: PCB Cells

Material is being spread out from the access road.

Loads of cover fill on placed on PCB Cells = 0;

Loads of topsoil delivered to site = 0;

Location: Area A

Golder Associates Inc.
3730 Chamblee Tucker Road
Atlanta, GA 30341 USA
Tel: (770) 496-1893 Fax: (770) 934-9476 www.golder.com

Golder Associates: Operations in Africa, Asia, Australasia, Europe, North America and South America

Golder, Golder Associates and the GA globe design are trademarks of Golder Associates Corporation

Tyler's crew is excavating footer for vaults #1 and #2; directed to excavate to 18-inches below top of existing wall and place 4 inches of DGA.

Location: CMT Borrow Area

No Activity

Location: Area C&D

No activity

Location: Groundwater Extraction System

Randy's crew is potholing/test pitting along pipe alignment to determine obstructions. Approximately 12-18 inches is possible along the first 100 feet, however some concrete and asphalt obstructions were encountered near exposed pad. Excavator and probe rod was used to find obstructions. Golder instructed Taylor to break up material and excavate approximately 12-18 inches if possible. The remaining soil will be mounded on top of trench to obtain 24-inches.

5.0 DISCUSSIONS / MEETINGS

Personnel Involved:	OU-3 RA Construction Team
Location:	Construction Trailer
Topics Covered:	Weekly update meeting

6.0 CQA TESTING PERFORMED ON-SITE

Location:	NA
Test:	NA

7.0 COMMENTS / ISSUES / OTHER

None

8.0 EQUIPMENT ONSITE

JD tractor/disc, Volvo compactor smooth drum, 2 Komatsu 210 excavators, SAKAI compactor sheep's foot, JD excavator 270(removed 9/22/15), Komatsu dozer 39EX, Vermeer wood chipper(removed from site 9/8/15), Komatsu excavator 228, JD skid steer 329E, EXTEC soil screener, Komatsu dozer GPS equipped(delivered 9/9/15), Off-road (delivered 9/8/15). Loader delivered to Borrow pit 9/14/15. Grader onsite 10/14/15

9.0 PHOTOGRAPHS



Photograph 1: test pitting along conveyance pipe alignment



Photograph 2: test pitting along conveyance pipe alignment

FIELD MONITORING REPORT

Project No.:	1302962.CQA	**Project Title:**	OU-3 RA Cover Systems
Location:	Anniston, AL		
Owner:	Solutia, Inc.		
Contractor:	Taylor Corp.		

Date: Thursday, January 28, 2016

1.0 SITE CONDITIONS

Weather Condition:	Mostly Sunny
Temperature:	32-57
Precipitation:	None

2.0 HEALTH AND SAFETY

Issues:	Proper use of gloves when handling contamination

3.0 GOLDER PERSONNEL ON SITE

Name	Time on Site
Patrick Callahan	0700 to 1600

4.0 SUMMARY OF ACTIVITIES

Location: Autoclave

No activity

Location: Area E

No activity

Location: PCB Cells

Material is being spread out from the access road and new topsoil.

Loads of cover fill on placed on PCB Cells = 0;

Loads of topsoil delivered to site = 17;

Location: Area A

Golder Associates Inc.
3730 Chamblee Tucker Road
Atlanta, GA 30341 USA
Tel: (770) 496-1893 Fax: (770) 934-9476 www.golder.com

Golder Associates: Operations in Africa, Asia, Australasia, Europe, North America and South America

Golder, Golder Associates and the GA globe design are trademarks of Golder Associates Corporation

Tyler's crew is excavating footer for vaults #1 and #2; directed to excavate to 18-inches below top of existing wall and place 4 inches of DGA. Acker Electric is on site to look at the electrical conduit running along the eastern-most vault. The plant has confirmed that the conduit is not in use, and Acker will remove a portion and stub out an end in order to pour the concrete footer.

Location: CMT Borrow Area

New screener is on site, limited screening of material but nothing hauled to PCB Cells

Location: Area C&D

A small amount of textile and gravel has been placed at the inlet of the C&D downslope ditch.

Location: Groundwater Extraction System

Randy's crew is potholing/test pitting along pipe alignment to determine obstructions. Approximately 12-18 inches is possible along the first 100 feet, however some concrete and asphalt obstructions were encountered near exposed pad. Excavator and probe rod was used to find obstructions. Golder instructed Taylor to break up material and excavate approximately 12-18 inches if possible. The remaining soil will be mounded on top of trench to obtain 24-inches.

5.0 DISCUSSIONS / MEETINGS

Personnel Involved:	NA
Location:	NA
Topics Covered:	NA

6.0 CQA TESTING PERFORMED ON-SITE

Location:	NA
Test:	NA

7.0 COMMENTS / ISSUES / OTHER

None

8.0 EQUIPMENT ONSITE

JD tractor/disc, Volvo compactor smooth drum, 2 Komatsu 210 excavators, SAKAI compactor sheep's foot, JD excavator 270(removed 9/22/15), Komatsu dozer 39EX, Vermeer wood chipper(removed from site 9/8/15), Komatsu excavator 228, JD skid steer 329E, EXTEC soil screener, Komatsu dozer GPS equipped(delivered 9/9/15), Off-road (delivered 9/8/15). Loader delivered to Borrow pit 9/14/15. Grader onsite 10/14/15

9.0 PHOTOGRAPHS



Photograph 1: test pitting along conveyance pipe alignment



Photograph 2: test pitting along conveyance pipe alignment

FIELD MONITORING REPORT

Project No.:	1302962.CQA	**Project Title:**	OU-3 RA Cover Systems
Location:	Anniston, AL		
Owner:	Solutia, Inc.		
Contractor:	Taylor Corp.		

Date: Monday, February 1, 2016

1.0 SITE CONDITIONS

Weather Condition:	Mostly Sunny, warm
Temperature:	52-73
Precipitation:	Light rain in the morning

2.0 HEALTH AND SAFETY

Issues:	Proper decontamination procedures

3.0 GOLDER PERSONNEL ON SITE

Name	Time on Site
Patrick Callahan	0700 to 1600
Kevin Killoran	1130 to 1700

4.0 SUMMARY OF ACTIVITIES

Location: Autoclave

No activity

Location: Area E

No activity

Location: PCB Cells

Material on the north side of the PCB Cells is being spread out from. Cover soil is being delivered from CMT borrow area, and topsoil is being delivered from an off-site source. Taylor is proposing to move the access road further to the north to allow for adequate drainage and to move cul-de-sac out of flat area.

Loads of cover fill on placed on PCB Cells = 17 (14 loads delivered on 1/31/16). No screened material had been placed 1/21 to 1/30.

Golder Associates Inc.
3730 Chamblee Tucker Road
Atlanta, GA 30341 USA
Tel: (770) 496-1893 Fax: (770) 934-9476 www.golder.com

Golder Associates: Operations in Africa, Asia, Australasia, Europe, North America and South America

Golder, Golder Associates and the GA globe design are trademarks of Golder Associates Corporation

Loads of topsoil delivered to site = 0;

Location: Area A

Brown Concrete crew is installing wood formwork and rebar within the footers of Vault #1 and Vault #2. Concrete pour is scheduled for 9:00am on 2/2/16.

Location: CMT Borrow Area

New screener is on site, limited screening of material but nothing hauled to PCB Cells. Taylor is currently using a 1-inch screen; if larger screen is changed out, Golder requires that oversized material be picked by hand.

Location: Area C&D

No Activity

Location: Groundwater Extraction System

Randy's crew has installed approximately 350 feet of 2-inch HDPE running from the carbon enclosure to the AWWSB tie-in. As of 2/1/16, there is approximately 100 feet left to trench/install.

Randy's crew continued to break up concrete and install 2-inch HDPE, leaving the pipe stubbed out near the man-hole tie in. A majority of the pipe is now in place. Randy's crew is also cleaning up excavated material and placing into roll-off.

Sonny's crew is now on site and are working on the carbon enclosure piping. Two carbon drums and bag filter have been delivered today.

5.0 DISCUSSIONS / MEETINGS

Personnel Involved:	Donn Williams, Patrick Callahan, Josh Threadgill
Location:	PCB Cells
Topics Covered:	A water bubble was encountered near the proposed location of the access road cul-de-sac by Tyler (Taylor Corp.) on 1/30/16. This area had been covered by cover soil the week of Jan 17, and the bubble was identified as topsoil was being placed in the area. Water was noted as coming out from under the liner in the NE corner of the cell, and a large amount of water rushed out when pressure was applied to the bubble via the low ground pressure dozier.

6.0 CQA TESTING PERFORMED ON-SITE

Location:	Northeast portion of PCB Cells
Test:	Depth checks

7.0 COMMENTS / ISSUES / OTHER

None

8.0 EQUIPMENT ONSITE

JD tractor/disc, Volvo compactor smooth drum, 2 Komatsu 210 excavators, SAKAI compactor sheep's foot, JD excavator 270(removed 9/22/15), Komatsu dozer 39EX, Vermeer wood chipper(removed from site 9/8/15), Komatsu excavator 228, JD skid steer 329E, EXTEC soil screener, Komatsu dozer GPS equipped(delivered 9/9/15), Off-road (delivered 9/8/15). Loader delivered to Borrow pit 9/14/15. Grader onsite 10/14/15

9.0 PHOTOGRAPHS



Photograph 1: Limits of topsoil cover, PCB Cells (area depth checked)



Photograph 2: placing cover soil along middle/north half of PCB Cells



Photograph 3: Screening cover soil material at PCB Cells



Photograph 4: Progress of 2-inch conveyance pipe installation at IW-26 and IW-27. Material under poly is excavated soil to be disposed of



Photograph 5: Limit of conveyance pipe installation.



Photograph 6: Concrete formwork for footers around Vault #1 and Vault #2, Area A

FIELD MONITORING REPORT

Project No.:	1302962.CQA	**Project Title:**	OU-3 RA Cover Systems
Location:	Anniston, AL		
Owner:	Solutia, Inc.		
Contractor:	Taylor Corp.		

Date: Tuesday, February 2, 2016

1.0 SITE CONDITIONS

Weather Condition:	Partly cloudy, warm, windy at time
Temperature:	53-77
Precipitation:	Light rain in the evening (0.06")

2.0 HEALTH AND SAFETY

Issues:	Protective eyewear

3.0 GOLDER PERSONNEL ON SITE

Name	Time on Site
Patrick Callahan	0700 to 1600
Kevin Killoran	0700 to 1700

4.0 SUMMARY OF ACTIVITIES

Location: Autoclave

No activity

Location: Area E

Concrete formwork, expansion joints, and rebar are in place for pour at NW corner of Area E.

Location: PCB Cells

Material on the north side of the PCB Cells is being spread out from borrow area and access road. Cover soil is being delivered from CMT borrow area, and topsoil is being delivered from an off-site source. P. Callahan and J. Threadgill performed depth checks of cover soil thickness in north-central portion of cells. The location of the water bubble was surveyed by J. Threadgill.

Loads of cover fill on placed on PCB Cells = 9;

Golder Associates Inc.
3730 Chamblee Tucker Road
Atlanta, GA 30341 USA
Tel: (770) 496-1893 Fax: (770) 934-9476 www.golder.com

Golder Associates: Operations in Africa, Asia, Australasia, Europe, North America and South America

Golder, Golder Associates and the GA globe design are trademarks of Golder Associates Corporation

Loads of topsoil delivered to site = 0;

Location: Area A

Brown Concrete crew is installing wood formwork and rebar within the footers of Vault #1 and Vault #2. Concrete pour is scheduled for 9:00am on 2/2/16.

Two concrete trucks delivered material for footer and Area E NW corner. Ticket numbers 115666 (9 yards) and 115679 (1 yard) were delivered. Slump: 4.0 inches, Air: 5.5%, Temp: 66.1F, 5 cylinders poured for compressive strength testing.

Location: CMT Borrow Area

New screener is on site, limited screening of material and hauling to PCB Cells. Taylor is currently using a 1-inch screen.

Location: Area C&D

No Activity

Location: Groundwater Extraction System

K. Killoran and P. Callahan observed the vault installed at IW-14. The conveyance pipe and electrical conduit are currently running on top of one another. Littleton will need to re-align conduit within vault to allow for adequate room to install flow meter.

Randy's crew has installed approximately 380 feet of 2-inch HDPE leaving the pipe stubbed out near the man-hole tie in. A majority of the pipe is now in place. Randy's crew is also cleaning up excavated material and placing into roll-off.

Sonny's crew is working on the carbon enclosure piping.

K. Killoran, D. Williams, and E. Bennett review plan to identify piping near IW-13, IW-2, and south landfill wells. Proposed to run water through lines to identify which lines are connected to each well. Taylor will provide a change order to Solutia for replacement of piping in the area.

5.0 DISCUSSIONS / MEETINGS

Personnel Involved:	Donn Williams, Patrick Callahan, Josh Threadgill, Ellis Bennett, Robbie Brown
Location:	Area A vault retaining walls
Topics Covered:	The fiber expansion joints will not be used between new concrete and existing concrete walls in Area A. Robbie has indicated that this is not standard practice due to the fact that soil on the back side of footer will provide room for expansion.

6.0 CQA TESTING PERFORMED ON-SITE

Location:	North-central portion of PCB Cells Area A Vaults footers
Test:	Depth checks of cover soil Concrete conformance testing (slump, air entrainment, and cylinders)

7.0 COMMENTS / ISSUES / OTHER

None

8.0 EQUIPMENT ONSITE

JD tractor/disc, Volvo compactor smooth drum, 2 Komatsu 210 excavators, SAKAI compactor sheep's foot, JD excavator 270(removed 9/22/15), Komatsu dozer 39EX, Vermeer wood chipper(removed from site 9/8/15), Komatsu excavator 228, JD skid steer 329E, EXTEC soil screener, Komatsu dozer GPS equipped(delivered 9/9/15), Off-road (delivered 9/8/15). Loader delivered to Borrow pit 9/14/15. Grader onsite 10/14/15

9.0 PHOTOGRAPHS



Photograph 1: Flow meter vault installed at IW-14



Photograph 2: testing of concrete for pour at Area A vaults



Photograph 3: Area A vaults with formwork and rebar in place for footer



Photograph 4: Limits of topsoil cover, PCB Cells (area depth checked)

FIELD MONITORING REPORT

Project No.:	1302962.CQA	**Project Title:**	OU-3 RA Cover Systems
Location:	Anniston, AL		
Owner:	Solutia, Inc.		
Contractor:	Taylor Corp.		

Date: Wednesday, February 3, 2016

1.0 SITE CONDITIONS

Weather Condition:	Mostly cloudy with rain; heavy rain during the early morning hours
Temperature:	46-71
Precipitation:	Heavy rain during the early morning hours (0.86")

2.0 HEALTH AND SAFETY

Issues:	Dangerous road conditions due to standing water from heavy rain.

3.0 GOLDER PERSONNEL ON SITE

Name	Time on Site
Patrick Callahan	0700 to 1600
Kevin Killoran	0700 to 1700

4.0 SUMMARY OF ACTIVITIES

Location: Autoclave

No activity

Location: Area E

No activity

Location: PCB Cells

No activity due to saturated conditions. Repair is needed at silt fence and check dam in northeast corner of cells.

Loads of cover fill on placed on PCB Cells = 0;

Loads of topsoil delivered to site = 0;

Golder Associates Inc.
3730 Chamblee Tucker Road
Atlanta, GA 30341 USA
Tel: (770) 496-1893 Fax: (770) 934-9476 www.golder.com

Golder Associates: Operations in Africa, Asia, Australasia, Europe, North America and South America

Golder, Golder Associates and the GA globe design are trademarks of Golder Associates Corporation

Location: Area A

Brown Concrete crew is installing wood formwork and rebar within the footers of Vault #1 and Vault #2. Concrete pour is scheduled for 9:00am on 2/2/16.

Two concrete trucks delivered material for footer and Area E NW corner. Ticket numbers 115666 (9 yards) and 115679 (1 yard) were delivered. Slump: 4.0 inches, Air: 5.5%, Temp: 66.1F, 5 cylinders poured for compressive strength testing.

Location: CMT Borrow Area

No Activity due to wet ground conditions

Location: Area C&D

No Activity

Location: Groundwater Extraction System

Sonny's crew continues to install bag filter, piping, valves, and pressure gauges within treatment enclosure. K. Killoran and P. Callahan talked with Sonny regarding piping inside carbon treatment enclosure. Littleton Electrical is on site today to wire circuit box to electrical output.

K. Killoran, P. Callahan, L. Taylor, and E. Bennett met at the South Landfill is observe piping in IW-2 and IW-13. Taylor will produce a cost estimate for replacing piping between wells and into new flow meter vault.

5.0 DISCUSSIONS / MEETINGS

Personnel Involved:	OU-3 Construction Team
Location:	Construction trailers
Topics Covered:	Weekly progress meeting. Construction team will meet with Plant personnel to discuss traffic plan while working in Areas A and E. There was discussion about using a larger screen in CMT Borrow Area, but 1" is currently still being used; Taylor plans to return new screen and make repairs to existing screen.

6.0 CQA TESTING PERFORMED ON-SITE

Location:	Northern boundary of PCB Cells
Test:	Grain size check of cover soils. Golder will conduct full grain size (minus 1") testing of cover soils and topsoil on 2/4/16

7.0 COMMENTS / ISSUES / OTHER

None

8.0 EQUIPMENT ONSITE

JD tractor/disc, Volvo compactor smooth drum, 2 Komatsu 210 excavators, SAKAI compactor sheep's foot, JD excavator 270(removed 9/22/15), Komatsu dozer 39EX, Vermeer wood chipper(removed from site 9/8/15), Komatsu excavator 228, JD skid steer 329E, EXTEC soil screener, Komatsu dozer GPS

equipped(delivered 9/9/15), Off-road (delivered 9/8/15). Loader delivered to Borrow pit 9/14/15. Grader onsite 10/14/15

9.0 PHOTOGRAPHS



Photograph 1: Bag filter and piping installed in IW-26/IW-27 carbon treatment enclosure



Photograph 2: Carbon vessels and piping installed in IW-26/IW-27 treatment enclosure (Feb 3)

FIELD MONITORING REPORT

Project No.:	1302962.CQA	**Project Title:**	OU-3 RA Cover Systems
Location:	Anniston, AL		
Owner:	Solutia, Inc.		
Contractor:	Taylor Corp.		

Date: Thursday, February 4, 2016

1.0 SITE CONDITIONS

Weather Condition:	Clear
Temperature:	38-51
Precipitation:	None

2.0 HEALTH AND SAFETY

Issues:	Always wear gloves when performing construction activities

3.0 GOLDER PERSONNEL ON SITE

Name	Time on Site
Patrick Callahan	0700 to 1600
Kevin Killoran	0700 to 1700
Steve Moeller	0900 to 1400

4.0 SUMMARY OF ACTIVITIES

Location: Autoclave

No activity

Location: Area E

No activity

Location: PCB Cells

No activity due to saturated conditions. Repair is needed at silt fence and check dam in northeast corner of cells.

Loads of cover fill on placed on PCB Cells = 0;

Golder Associates Inc.
3730 Chamblee Tucker Road
Atlanta, GA 30341 USA
Tel: (770) 496-1893 Fax: (770) 934-9476 www.golder.com

Golder Associates: Operations in Africa, Asia, Australasia, Europe, North America and South America

Golder, Golder Associates and the GA globe design are trademarks of Golder Associates Corporation

Loads of topsoil delivered to site = 0;

Location: Area A

No activity

Location: CMT Borrow Area

No Activity due to wet ground conditions

Location: Area C&D

No Activity

Location: Groundwater Extraction System

Sonny's crew continues to install bag filter, piping, valves, and pressure gauges within treatment enclosure. K. Killoran and P. Callahan inspected the piep rack and collected notes on further work to be completed.

5.0 DISCUSSIONS / MEETINGS

Personnel Involved:	OU-3 Construction Team
Location:	Construction trailers
Topics Covered:	Weekly progress meeting. Construction team will meet with Plant personnel to discuss traffic plan while working in Areas A and E. There was discussion about using a larger screen in CMT Borrow Area, but 1" is currently still being used; Taylor plans to return new screen and make repairs to existing screen.

6.0 CQA TESTING PERFORMED ON-SITE

Location:	Topsoil and cover soil of PCB Cells
Test:	Collected five samples of topsoil (TSPS-1 through 5) and eight samples of cover soil (CSPS-4 through 11). Golder conducted grain size (minus 1") testing of cover soils and topsoil.

7.0 COMMENTS / ISSUES / OTHER

None

8.0 EQUIPMENT ONSITE

JD tractor/disc, Volvo compactor smooth drum, 2 Komatsu 210 excavators, SAKAI compactor sheep's foot, JD excavator 270(removed 9/22/15), Komatsu dozer 39EX, Vermeer wood chipper(removed from site 9/8/15), Komatsu excavator 228, JD skid steer 329E, EXTEC soil screener, Komatsu dozer GPS equipped(delivered 9/9/15), Off-road (delivered 9/8/15). Loader delivered to Borrow pit 9/14/15. Grader onsite 10/14/15

9.0 PHOTOGRAPHS



Photograph 1: ADDITIONAL PIPING AND PRESSURE INDICATORS INSTALLED IN IW-26/IW-27 CARBON TREATMENT ENCLOSURE (FEB 4)

FIELD MONITORING REPORT

Project No.:	1302962.CQA	**Project Title:**	OU-3 RA Cover Systems
Location:	Anniston, AL		
Owner:	Solutia, Inc.		
Contractor:	Taylor Corp.		

Date: Monday, February 8, 2016

1.0 SITE CONDITIONS

Weather Condition:	Cooler, Partly Cloudy and windy
Temperature:	31-54
Precipitation:	None

2.0 HEALTH AND SAFETY

Issues:	Dress appropriately for cold weather

3.0 GOLDER PERSONNEL ON SITE

Name	Time on Site
Patrick Callahan	0700 to 1600

4.0 SUMMARY OF ACTIVITIES

Location: Autoclave

No activity

Location: Area E

Brown Concrete crew is installing wood formwork for footing along eastern side of future control building.

Location: PCB Cells

Cover soil material is being delivered.

Loads of cover fill on placed on PCB Cells = 7;

Loads of topsoil delivered to site = 0;

Location: Area A

No Activity. Wall forms are in place and pour is scheduled for 2/11/16 (waiting for warmer weather)

Golder Associates Inc.
3730 Chamblee Tucker Road
Atlanta, GA 30341 USA
Tel: (770) 496-1893 Fax: (770) 934-9476 www.golder.com

Golder Associates: Operations in Africa, Asia, Australasia, Europe, North America and South America

Golder, Golder Associates and the GA globe design are trademarks of Golder Associates Corporation

Location: CMT Borrow Area

Taylor's old screen is now back up and running. Material is being screened and delivered to PCB Cells for cover soil. Additional material is also being stockpile for use in Area A and Area E subgrade preparation.

Location: Area C&D

No Activity

Location: Groundwater Extraction System

Sonny's crew has begun excavating and exposing conveyance piping within the SMWU-I treatment system at the South Landfill. The conveyance pipes were previously exposed as part of the flow meter vault installation in December, however activity was halted due to leaking lines. Sonny's crew exposed three 2-inch HDPE pipes, and are preparing the area for pump testing. Jerry Hopper has locked out pumping system.

Lance T. and Ellis B. were on site with their piping supplier to inspect the 24-inch wells and come up with a design for valves.

5.0 DISCUSSIONS / MEETINGS

Personnel Involved:	NA
Location:	NA
Topics Covered:	NA

6.0 CQA TESTING PERFORMED ON-SITE

Location:	PCB Cells
Test:	Checking thickness of cover soils and topsoil

7.0 COMMENTS / ISSUES / OTHER

None

8.0 EQUIPMENT ONSITE

JD tractor/disc, Volvo compactor smooth drum, 2 Komatsu 210 excavators, SAKAI compactor sheep's foot, JD excavator 270(removed 9/22/15), Komatsu dozer 39EX, Vermeer wood chipper(removed from site 9/8/15), Komatsu excavator 228, JD skid steer 329E, EXTEC soil screener, Komatsu dozer GPS equipped(delivered 9/9/15), Off-road (delivered 9/8/15). Loader delivered to Borrow pit 9/14/15. Grader onsite 10/14/15

9.0 PHOTOGRAPHS



Photograph 1: Wall forms in place around Area A vaults, NE Corner



Photograph 2: Placement of topsoil on PCB Cells, cells are now covered with cover soil

FIELD MONITORING REPORT

Project No.:	1302962.CQA	**Project Title:**	OU-3 RA Cover Systems
Location:	Anniston, AL		
Owner:	Solutia, Inc.		
Contractor:	Taylor Corp.		

Date: Tuesday, February 9, 2016

1.0 SITE CONDITIONS

Weather Condition:	Cooler, Partly Cloudy and windy
Temperature:	27-39
Precipitation:	Light rain

2.0 HEALTH AND SAFETY

Issues:	Dress appropriately for cold weather

3.0 GOLDER PERSONNEL ON SITE

Name	Time on Site
Patrick Callahan	0700 to 1600

4.0 SUMMARY OF ACTIVITIES

Location: Autoclave

No activity

Location: Area E

Brown Concrete crew is installing wood formwork for footing along eastern side of future control building.

Location: PCB Cells

Riprap is being placed along the eastern boundary of the PCB Cells. An excavator on crane mats is being used to place riprap, while two skid steers carry the material to a rock box.

Loads of cover fill on placed on PCB Cells = 0;

Loads of topsoil delivered to site = 0;

Golder Associates Inc.
3730 Chamblee Tucker Road
Atlanta, GA 30341 USA
Tel: (770) 496-1893 Fax: (770) 934-9476 www.golder.com

Golder Associates: Operations in Africa, Asia, Australasia, Europe, North America and South America

Golder, Golder Associates and the GA globe design are trademarks of Golder Associates Corporation

Location: Area A

No Activity. Wall forms are in place and pour is scheduled for 2/11/16 (waiting for warmer weather)

Location: CMT Borrow Area

Taylor's old screen is now back up and running. Material is being screened and delivered to PCB Cells for cover soil. Additional material is also being stockpile for use in Area A and Area E subgrade preparation.

Location: Area C&D

No Activity

Location: Groundwater Extraction System

Sonny's crew exposed three 2-inch HDPE pipes on 2/8/16, and are preparing the area for pump testing. Materials were delivered to site in order to hook up the water truck to the manifold near IW-10, and the sampling port on IW-2. A pump test was conducted on the SWMU-1 system with oversight from Tom Collins. Allen Hall and Mark Knighton are within the plant to observe any water flowing out of the system and into the wet well.

The first test was conducted by hooking the water truck up to the IW-10 manifold. Green dye was placed in the lines in order to identify pump test water. No water was observed flowing through the exposed lines, however water was seen flowing through the disconnected output line in IW-13. The line within IW-13 was re-connected, and dyed water was then observed bubbling to surface at the existing leak spot.

A second test was conducted by hooking the water truck up to IW-2. After pumping, water came flowing out from excavation sidewall, north of the exposed lines. No water was observed down to Manhole #8.

Sonny's crew plans to excavate near the leaking sections of pipes to expose the break / damage. A new pump test will be completed on 2/10.

5.0 DISCUSSIONS / MEETINGS

Personnel Involved:	NA
Location:	NA
Topics Covered:	NA

6.0 CQA TESTING PERFORMED ON-SITE

Location:	NA
Test:	NA

7.0 COMMENTS / ISSUES / OTHER

None

8.0 EQUIPMENT ONSITE

JD tractor/disc, Volvo compactor smooth drum, 2 Komatsu 210 excavators, SAKAI compactor sheep's foot, JD excavator 270(removed 9/22/15), Komatsu dozer 39EX, Vermeer wood chipper(removed from site 9/8/15), Komatsu excavator 228, JD skid steer 329E, EXTEC soil screener, Komatsu dozer GPS equipped(delivered 9/9/15), Off-road (delivered 9/8/15). Loader delivered to Borrow pit 9/14/15. Grader onsite 10/14/15

9.0 PHOTOGRAPHS



Photograph 1: Placement of riprap along eastern side of PCB Cells



Photograph 2: Limits of soil on PCB Cells, cells are now covered with cover soil



Photograph 3: Connection of water truck pump line to carbon treatment manifold



Photograph 4: Water surfacing near exposed lines after pumping on manifold



Photograph 5: Connection of pump line to IW-2 sampling port



Photograph 6: Water leaking into excavation after pumping at IW-2

FIELD MONITORING REPORT

Project No.:	1302962.CQA	**Project Title:**	OU-3 RA Cover Systems
Location:	Anniston, AL		
Owner:	Solutia, Inc.		
Contractor:	Taylor Corp.		

Date: Wednesday, February 10, 2016

1.0 SITE CONDITIONS

Weather Condition:	Cooler, Partly Cloudy and windy
Temperature:	21-41
Precipitation:	Light rain

2.0 HEALTH AND SAFETY

Issues:	Dress appropriately for cold weather

3.0 GOLDER PERSONNEL ON SITE

Name	Time on Site
Patrick Callahan	0700 to 1600
Steve Moeller	1015 to 1600
Brent Waters	1200 to 1600

4.0 SUMMARY OF ACTIVITIES

Location: Autoclave

No activity

Location: Area E

Brown Concrete crew is installing wood formwork for footing along eastern side of future control building.

Footing pour is scheduled for 2/11

Location: PCB Cells

Riprap is being placed along the eastern and northeastern boundary of the PCB Cells. An excavator on crane mats is being used to place riprap, while two skid steers carry the material to a rock box.

Loads of cover fill on placed on PCB Cells = 0;

Golder Associates Inc.
3730 Chamblee Tucker Road
Atlanta, GA 30341 USA
Tel: (770) 496-1893 Fax: (770) 934-9476 www.golder.com

Golder Associates: Operations in Africa, Asia, Australasia, Europe, North America and South America

Golder, Golder Associates and the GA globe design are trademarks of Golder Associates Corporation

Loads of topsoil delivered to site = 29;

Location: Area A

No Activity. Wall forms are in place and pour is scheduled for 2/11/16 (waiting for warmer weather)

Location: CMT Borrow Area

Taylor's old screen is now back up and running. Material is being screened and stockpiled.

Location: Area C&D

No Activity

Location: Groundwater Extraction System

Sonny's crew is working to excavate near the leaking sections of pipes identified on 2/9 pump test to expose the broken / damaged sections of pipe. Three pipes have been exposed to the SE of 2/9 excavation and the pump truck will be connected directly to these lines.

1. The pump truck was connected to the center line. A gash was identified in this line and it is assumed that it is connected to the manifold. Water pressure was applied to the line and no flow was observed.

2. The pump truck was connected to the easternmost line. Flow was observed coming to the surface near the Alimet Dike.

3. The pump truck was connected to the westernmost line. Flow was again observed coming into the north sidewall of the 2/9 excavation.

5.0 DISCUSSIONS / MEETINGS

Personnel Involved:	NA
Location:	NA
Topics Covered:	NA

6.0 CQA TESTING PERFORMED ON-SITE

Location:	PCB Cells
Test:	Cover soil and topsoil depth checks

7.0 COMMENTS / ISSUES / OTHER

Brent Waters (Golder) is on site to inspect the seep area.

8.0 EQUIPMENT ONSITE

JD tractor/disc, Volvo compactor smooth drum, 2 Komatsu 210 excavators, SAKAI compactor sheep's foot, JD excavator 270(removed 9/22/15), Komatsu dozer 39EX, Vermeer wood chipper(removed from site 9/8/15), Komatsu excavator 228, JD skid steer 329E, EXTEC soil screener, Komatsu dozer GPS

equipped(delivered 9/9/15), Off-road (delivered 9/8/15). Loader delivered to Borrow pit 9/14/15. Grader onsite 10/14/15

9.0 PHOTOGRAPHS



Photograph 1: Excavation SE of excavation completed on 2/9/16. Three conveyance lines are exposed. The middle line had a gash in it, leaking while pumping from manifold on 2/9/16



Photograph 2: Gash in exposed line

FIELD MONITORING REPORT

Project No.:	1302962.CQA	**Project Title:**	OU-3 RA Cover Systems
Location:	Anniston, AL		
Owner:	Solutia, Inc.		
Contractor:	Taylor Corp.		

Date: Friday, February 12, 2016

1.0 SITE CONDITIONS

Weather Condition:	Clear, warmer
Temperature:	38-65
Precipitation:	None

2.0 HEALTH AND SAFETY

Issues:	Review of sampling procedures, proper PPE

3.0 GOLDER PERSONNEL ON SITE

Name	Time on Site
Patrick Callahan	0930 to 1600

4.0 SUMMARY OF ACTIVITIES

Location: Autoclave

No activity

Location: Area E

The concrete footer was poured on 2/11/16

Location: PCB Cells

Riprap is being placed along the northern boundary of the PCB Cells. An excavator on crane mats is being used to place riprap, while two skid steers carry the material to a rock box. Golder is on site to collect water sample from seep area. Samples will be submitted to TestAmerica for analytical testing.

Loads of cover fill on placed on PCB Cells = 0;

Loads of topsoil delivered to site = 0;

Golder Associates Inc.
3730 Chamblee Tucker Road
Atlanta, GA 30341 USA
Tel: (770) 496-1893 Fax: (770) 934-9476 www.golder.com

Golder Associates: Operations in Africa, Asia, Australasia, Europe, North America and South America

Golder, Golder Associates and the GA globe design are trademarks of Golder Associates Corporation

Location: Area A

Wall of Area A vaults was poured on 2/11/16

Location: CMT Borrow Area

Taylor's old screen is now back up and running. Material is being screened and stockpiled.

Location: Area C&D

No Activity

Location: Groundwater Extraction System

Sonny's crew is working to excavate north the leaking sections of pipes identified on 2/10 pump test to expose the broken / damaged sections of pipe. Three pipes were exposed. The westernmost pipe (presumable connected to IW-2) was stubbed out and not connected to any pipe downstream. The center pipe contains a tee-joint going off to the west, and a large section was removed which contained blockage due to soil in the lines.

1. The pump truck was connected to the center line (presumably connected to the manifold). Water pressure was applied to the line, but no flow was conveyed downstream.

5.0 DISCUSSIONS / MEETINGS

Personnel Involved:	NA
Location:	NA
Topics Covered:	NA

6.0 CQA TESTING PERFORMED ON-SITE

Location:	NA
Test:	NA

7.0 COMMENTS / ISSUES / OTHER

Brent Waters (Golder) is on site to inspect the seep area.

8.0 EQUIPMENT ONSITE

JD tractor/disc, Volvo compactor smooth drum, 2 Komatsu 210 excavators, SAKAI compactor sheep's foot, JD excavator 270(removed 9/22/15), Komatsu dozer 39EX, Vermeer wood chipper(removed from site 9/8/15), Komatsu excavator 228, JD skid steer 329E, EXTEC soil screener, Komatsu dozer GPS equipped(delivered 9/9/15), Off-road (delivered 9/8/15). Loader delivered to Borrow pit 9/14/15. Grader onsite 10/14/15

9.0 PHOTOGRAPHS



Photograph 1: Stockpiling of cover soil in CMT Borrow Area



Photograph 2: Placement of riprap along northern boundary of PCB Cells



Photograph 3: Exposed lines, north of 2/9 excavation. Western line is stubbed out, central line has a tee connection. A blockage was removed from the central line, and water pressure was applied but no conveyance was noted.

FIELD MONITORING REPORT

Project No.:	1302962.CQA	**Project Title:**	OU-3 RA Cover Systems
Location:	Anniston, AL		
Owner:	Solutia, Inc.		
Contractor:	Taylor Corp.		

Date: Monday, February 15, 2016

1.0 SITE CONDITIONS

Weather Condition:	Cloudy with storms
Temperature:	43-58
Precipitation:	1.56”

2.0 HEALTH AND SAFETY

Issues:	Keep an eye open for construction equipment traffic

3.0 GOLDER PERSONNEL ON SITE

Name	Time on Site
Patrick Callahan	0930 to 1400

4.0 SUMMARY OF ACTIVITIES

Location: Autoclave

No activity

Location: Area E

Robbie Brown’s crew is beginning to install formwork for wall pour.

Location: PCB Cells

Tyler’s crew is doing some light grading and spreading topsoil on the PCB Cells. Taylor Corp. personnel left site at approximately 1100 due to rain.

Loads of cover fill on placed on PCB Cells = 0;

Loads of topsoil delivered to site = 0;

Golder Associates Inc.
3730 Chamblee Tucker Road
Atlanta, GA 30341 USA
Tel: (770) 496-1893 Fax: (770) 934-9476 www.golder.com

Golder Associates: Operations in Africa, Asia, Australasia, Europe, North America and South America

Golder, Golder Associates and the GA globe design are trademarks of Golder Associates Corporation

Location: Area A

No activity

Location: CMT Borrow Area

Material is being screened and stockpiled.

Location: Area C&D

No Activity

Location: Groundwater Extraction System

Sonny's crew is staging material and equipment at the Alimet Dike to prepare to expose piping in the vicinity of a leak observed during the previous week's pump test. No excavation was completed due to rain.

5.0 DISCUSSIONS / MEETINGS

Personnel Involved:	NA
Location:	NA
Topics Covered:	NA

6.0 CQA TESTING PERFORMED ON-SITE

Location:	NA
Test:	NA

7.0 COMMENTS / ISSUES / OTHER

None

8.0 EQUIPMENT ONSITE

JD tractor/disc, Volvo compactor smooth drum, 2 Komatsu 210 excavators, SAKAI compactor sheep's foot, JD excavator 270(removed 9/22/15), Komatsu dozer 39EX, Vermeer wood chipper(removed from site 9/8/15), Komatsu excavator 228, JD skid steer 329E, EXTEC soil screener, Komatsu dozer GPS equipped(delivered 9/9/15), Off-road (delivered 9/8/15). Loader delivered to Borrow pit 9/14/15. Grader onsite 10/14/15

9.0 PHOTOGRAPHS

Photograph 1:

Photograph 2:

Photograph 3:

FIELD MONITORING REPORT

Project No.:	1302962.CQA	**Project Title:**	OU-3 RA Cover Systems
Location:	Anniston, AL		
Owner:	Solutia, Inc.		
Contractor:	Taylor Corp.		

Date: Tuesday, February 16, 2016

1.0 SITE CONDITIONS

Weather Condition:	Cloudy with light rain
Temperature:	37-62
Precipitation:	<0.1”

2.0 HEALTH AND SAFETY

Issues:	Always ensure equipment operators can see you before approaching

3.0 GOLDER PERSONNEL ON SITE

Name	Time on Site
Patrick Callahan	0700 to 16

4.0 SUMMARY OF ACTIVITIES

Location: Autoclave

No activity

Location: Area E

Robbie Brown’s crew is beginning to install formwork for wall pour. The footing form is being removed.

Location: PCB Cells

Inspection of BMPs after heavy rain on 2/15 identified several locations of repair along the north and northeast perimeter of the PCB Cells. Although most silt fence intact, several locations are leaning over or have a significant amount of silt built up behind them; Jason will address and repair BMPs.

Flow from the seep area has been noted to be the same as the previous week.

PCB cells are too wet for work.

Golder Associates Inc.
3730 Chamblee Tucker Road
Atlanta, GA 30341 USA
Tel: (770) 496-1893 Fax: (770) 934-9476 www.golder.com

Golder Associates: Operations in Africa, Asia, Australasia, Europe, North America and South America

Golder, Golder Associates and the GA globe design are trademarks of Golder Associates Corporation

Location: Area A

Tyler's crew is working on wall foundation and pad for SW vaults in Area A. P. Callahan and Tyler discussed pad and wall design.

Location: CMT Borrow Area

Borrow area is too wet for screening.

Location: Area C&D

No Activity

Location: Groundwater Extraction System

Sonny's crew is beginning excavation to expose the leaking pipe near the Alimet Dike. At a depth of approximately 1 ft-bgs, dyed water is entering the excavation. Pumps and sediment bags are being implemented to manage water. A small containment dike has been constructed to hinder flow of sediment.

The excavation has been dug to approximately 4 ft-bgs immediately next to the Alimet Dike. At 9:30 a water truck is being mobilized to the S. Landfill to pump water into the conveyance line (Taylor hopes this will help identify the exact location of the damaged line). After pumping, dyed water was observed infiltrating from the north side of the excavation, from under the pipe rack foundation. John L and Donn W. are on site to observe progress. Donn W. has ordered that excavation be stopped and no further searching for the conveyance line. Golder and Taylor will explore options for delivering a frac tank to site for temporary storage.

5.0 DISCUSSIONS / MEETINGS

Personnel Involved:	Remediation team, EPA, ADEM
Location:	Remediation office
Topics Covered:	Weekly progress meeting

6.0 CQA TESTING PERFORMED ON-SITE

Location:	NA
Test:	NA

7.0 COMMENTS / ISSUES / OTHER

None

8.0 EQUIPMENT ONSITE

JD tractor/disc, Volvo compactor smooth drum, 2 Komatsu 210 excavators, SAKAI compactor sheep's foot, JD excavator 270(removed 9/22/15), Komatsu dozer 39EX, Vermeer wood chipper(removed from site 9/8/15), Komatsu excavator 228, JD skid steer 329E, EXTEC soil screener, Komatsu dozer GPS

equipped(delivered 9/9/15), Off-road (delivered 9/8/15). Loader delivered to Borrow pit 9/14/15. Grader onsite 10/14/15

9.0 PHOTOGRAPHS

Photograph 1:

Photograph 2:

Photograph 3:

FIELD MONITORING REPORT

Project No.:	1302962.CQA	**Project Title:**	OU-3 RA Cover Systems
Location:	Anniston, AL		
Owner:	Solutia, Inc.		
Contractor:	Taylor Corp.		

Date: Wednesday, February 17, 2016

1.0 SITE CONDITIONS

Weather Condition:	Mostly Sunny
Temperature:	37-53
Precipitation:	None

2.0 HEALTH AND SAFETY

Issues:	Drive the speed limit at all times while on site

3.0 GOLDER PERSONNEL ON SITE

Name	Time on Site
Patrick Callahan	0715 to 1630
Kevin Killoran	1130 to 1700

4.0 SUMMARY OF ACTIVITIES

Location: Autoclave

No activity

Location: Area E

The concrete footer was poured on 2/11/16

Location: PCB Cells

PCB cells are too wet for work.

Location: Area A

Tyler's crew is working on wall foundation and pad for SW vaults in Area A. A 2-inch PVC line running from the sampling port/pump station was contacted during the excavation for pad/wall foundation. A

Golder, Golder Associates and the GA globe design are trademarks of Golder Associates Corporation

small leak was encountered; Mark K. was notified and the pump was temporarily shut off to make repairs. By 1200 the line was repaired and sampling port was raised to accommodate concrete pad. The pump was turned back on.

Location: CMT Borrow Area

Borrow area is too wet for screening.

Location: Area C&D

No Activity

Location: Groundwater Extraction System

Some of Sonny's crew is working on upgrades the pipe rack system. After lunch they transitioned to working on the SMWU-I system at the south landfill. Josh T. provided Sonny with specification from the frac tank supplier for valves and fittings.

The rest of Tyler's crew is working to construct an access pad and modify the entry road for placement of two frac tanks. 10 oz fabric has been placed over the laydown area, and oversized material is being hauled from the Borrow Area for the pad foundation. The top layer of laydown pad is being filled in and leveled with DGA. A culvert crossing along the access road has been bridged with 24 stone and DGA to provide extra support.

Delivery of two frac tanks is scheduled for 2/18/16

5.0 DISCUSSIONS / MEETINGS

Personnel Involved:	RA Construction Team
Location:	Construction trailer
Topics Covered:	Weekly update meeting

6.0 CQA TESTING PERFORMED ON-SITE

Location:	NA
Test:	NA

7.0 COMMENTS / ISSUES / OTHER

Kevin K and plant site personnel (Jerry H and Mark K) held a meeting to discuss the placement of frac tanks and disposal of water within the plant's wastewater system. The Plant has informed Golder and the remediation team that they are not in favor a placing frac tanks on the S. Landfill. Mike P and Gayle M. will discuss temporary storage options on 2/18

8.0 EQUIPMENT ONSITE

JD tractor/disc, Volvo compactor smooth drum, 2 Komatsu 210 excavators, SAKAI compactor sheep's foot, JD excavator 270(removed 9/22/15), Komatsu dozer 39EX, Vermeer wood chipper(removed from site 9/8/15), Komatsu excavator 228, JD skid steer 329E, EXTEC soil screener, Komatsu dozer GPS

equipped(delivered 9/9/15), Off-road (delivered 9/8/15). Loader delivered to Borrow pit 9/14/15. Grader onsite 10/14/15

9.0 PHOTOGRAPHS

Photograph 1:

Photograph 2:

Photograph 3:

FIELD MONITORING REPORT

Project No.:	1302962.CQA	**Project Title:**	OU-3 RA Cover Systems
Location:	Anniston, AL		
Owner:	Solutia, Inc.		
Contractor:	Taylor Corp.		

Date: Thursday, February 18, 2016

1.0 SITE CONDITIONS

Weather Condition:	Clear, warmer
Temperature:	33-66
Precipitation:	None

2.0 HEALTH AND SAFETY

Issues:	Review of sampling procedures, proper PPE

3.0 GOLDER PERSONNEL ON SITE

Name	Time on Site
Patrick Callahan	0700 to 1800
Kevin Killoran	0700 to 1830

4.0 SUMMARY OF ACTIVITIES

Location: Autoclave

No activity

Location: Area E

1200 Concrete was delivered to site for pour of wall form at Area E.

Location: PCB Cells

DGA is being delivered to PCB cells for construction of the access road. Riprap is being placed along the western boundary of the PCB Cells. Ellis has laid out flagging to mark the location of access road.

Location: Area A

30” slab in Area A vault was poured.

Golder Associates Inc.
3730 Chamblee Tucker Road
Atlanta, GA 30341 USA
Tel: (770) 496-1893 Fax: (770) 934-9476 www.golder.com

Golder Associates: Operations in Africa, Asia, Australasia, Europe, North America and South America

Golder, Golder Associates and the GA globe design are trademarks of Golder Associates Corporation

Tyler's crew continues to work on pad foundation for SW vaults in Area A. Based on Golder's instruction, 1 union valve was raised by approximately 2" to avoid contact with the concrete pad. A 2" hole was also drilled into the side of the existing drainage manhole to allow for drainage of surface water around the pump foundation. Because the pump foundation is slightly lower than the existing vault wall, Taylor recommended a secondary drainage location so the pad does not hold water.

At 8:15 Robbie Brown's crew is working to install wall footing formwork around vault.

Location: CMT Borrow Area

Material is being screened and stockpiled.

Location: Area C&D

No Activity

Location: Groundwater Extraction System

Sonny's crew spent most of the morning gathering parts and fittings to connect the conveyance piping to the frac tank. Based on Kevin K's recommendation, the three exposed lines will be extended vertically out of the ditch, backflow preventers and valves installed, combined, and directed towards the tanks.

As a check of the overall system, Golder has recommended running water through IW-13, IW-2, and the manifold. Three pump tests were performed:

1. Water was pumped through IW-2 and was observed coming out of the westernmost pipe, as expected.
2. Water was pumped through the manifold and was observed coming out from the tee connection and flowing back uphill in the middle line, in the opposite direction as originally estimated.
3. Water was pumped through IW-13 and was observed coming out from the tee connection and flowing back uphill, in the opposite direction as originally estimated. Due to the direction of flow out of IW-13 and the manifold system, the collection pipes were reversed in the middle conveyance line.

5.0 DISCUSSIONS / MEETINGS

Personnel Involved:	NA
Location:	NA
Topics Covered:	NA

6.0 CQA TESTING PERFORMED ON-SITE

Location:	NA
Test:	NA

7.0 COMMENTS / ISSUES / OTHER

Mike P and Gayle M met with plant personnel to discuss temporary storage location for the frac tanks. It was ultimately decided that storage next to the SMWU-1 system would be acceptable.

8.0 EQUIPMENT ONSITE

JD tractor/disc, Volvo compactor smooth drum, 2 Komatsu 210 excavators, SAKAI compactor sheep's foot, JD excavator 270(removed 9/22/15), Komatsu dozer 39EX, Vermeer wood chipper(removed from site 9/8/15), Komatsu excavator 228, JD skid steer 329E, EXTEC soil screener, Komatsu dozer GPS equipped(delivered 9/9/15), Off-road (delivered 9/8/15). Loader delivered to Borrow pit 9/14/15. Grader onsite 10/14/15

9.0 PHOTOGRAPHS

Photograph 1: a

Photograph 2:

Photograph 3:

FIELD MONITORING REPORT

Project No.:	1302962.CQA	**Project Title:**	OU-3 RA Cover Systems
Location:	Anniston, AL		
Owner:	Solutia, Inc.		
Contractor:	Taylor Corp.		

Date: Friday, February 19, 2016

1.0 SITE CONDITIONS

Weather Condition:	Clear, warm
Temperature:	39-71
Precipitation:	None

2.0 HEALTH AND SAFETY

Issues:	Wear protective eyeware and gloves while conducting RA activities

3.0 GOLDER PERSONNEL ON SITE

Name	Time on Site
Patrick Callahan	0700 to 1500
Kevin Killoran	0700 to 1700

4.0 SUMMARY OF ACTIVITIES

Location: Autoclave

No activity

Location: Area E

The concrete footer was poured on 2/11/16

Location: PCB Cells

Taylor is working to prepare PCB cells for the construction of the access road. Excess soil material is being removed near the entrance.

Location: Area A

Wall of Area A vaults was poured on 2/11/16

Golder Associates Inc.
3730 Chamblee Tucker Road
Atlanta, GA 30341 USA
Tel: (770) 496-1893 Fax: (770) 934-9476 www.golder.com

Golder Associates: Operations in Africa, Asia, Australasia, Europe, North America and South America

Golder, Golder Associates and the GA globe design are trademarks of Golder Associates Corporation

Location: CMT Borrow Area

Taylor's old screen is now back up and running. Material is being screened and stockpiled.

Location: Area C&D

No Activity

Location: Groundwater Extraction System

RA construction team has received approval to move frac tanks into place at the S Landfill. Excavator is being used to pull tanks into place on laydown pad.

Sonny's crew spent most of the morning installing fittings, valves, and backflow preventers to connect the conveyance piping to the frac tank.

A temporary line was run from the IW13/Manifold line (center line) to the frac tank in order to identify flow though the manifold system of individual wells. Allen Hall's crew have uncovered the manifold and will be present with Jerry H. Water is being pumped through individual interceptor wells, and the backflow preventers on each manifold line are being marked to identify which well they are hooked up to.

5.0 DISCUSSIONS / MEETINGS

Personnel Involved:	NA
Location:	NA
Topics Covered:	NA

6.0 CQA TESTING PERFORMED ON-SITE

Location:	NA
Test:	NA

7.0 COMMENTS / ISSUES / OTHER

None

8.0 EQUIPMENT ONSITE

JD tractor/disc, Volvo compactor smooth drum, 2 Komatsu 210 excavators, SAKAI compactor sheep's foot, JD excavator 270(removed 9/22/15), Komatsu dozer 39EX, Vermeer wood chipper(removed from site 9/8/15), Komatsu excavator 228, JD skid steer 329E, EXTEC soil screener, Komatsu dozer GPS equipped(delivered 9/9/15), Off-road (delivered 9/8/15). Loader delivered to Borrow pit 9/14/15. Grader onsite 10/14/15

9.0 PHOTOGRAPHS



Photograph 1: Stockpiling of cover soil in CMT Borrow Area



Photograph 2: Placement of riprap along northern boundary of PCB Cells



Photograph 3: Exposed lines, north of 2/9 excavation. Western line is stubbed out, central line has a tee connection. A blockage was removed from the central line, and water pressure was applied but no conveyance was noted.

FIELD MONITORING REPORT

Project No.:	1302962.CQA	**Project Title:**	OU-3 RA Cover Systems
Location:	Anniston, AL		
Owner:	Solutia, Inc.		
Contractor:	Taylor Corp.		

Date: Friday, February 26, 2016

1.0 SITE CONDITIONS

Weather Condition:	Clear
Temperature:	32-54
Precipitation:	None

2.0 HEALTH AND SAFETY

Issues:	Hearing protection

3.0 GOLDER PERSONNEL ON SITE

Name	Time on Site
Patrick Callahan	0700 to 1500

4.0 SUMMARY OF ACTIVITIES

Location: Autoclave

No activity

Location: Area E

The concrete footer was poured on 2/11/16

Location: PCB Cells

Taylor is working on the construction of the access road. 10 oz geotextile and DGA is being placed. Excess soil material is being removed near the entrance.

Location: Area A

A majority of the area has been disc'ed and has been holding up well with the recent rain. There is one low spot north of the easternmost vaults that is holding water and has become muddy. Golder recommends bridging in this area.

Golder Associates Inc.
3730 Chamblee Tucker Road
Atlanta, GA 30341 USA
Tel: (770) 496-1893 Fax: (770) 934-9476 www.golder.com

Golder Associates: Operations in Africa, Asia, Australasia, Europe, North America and South America

Golder, Golder Associates and the GA globe design are trademarks of Golder Associates Corporation

Guy wires along western boundary have been raised, and AT&T is on site to raise the telecom fiber pedestal.

One “sinkhole” has been identified adjacent to the easternmost vault. The area is a depression in the ground that has been eroded from recent rain; site drawing from Tom Collins indicate that the location is a abandoned manhole/basin inlet. Donn has directed Taylor to excavate the area. An open pipe and manhole was discovered. The excavation was backfilled with a reinforcing geosynthetic, riprap, and concrete.

The westernmost vault footing has been poured.

Location: CMT Borrow Area

Material is being screened and stockpiled. Taylor has agreed to cut the floor of the borrow area to a 2% grade, but has not started significant excavation along the floor.

Location: Area C&D

No Activity

Location: Groundwater Extraction System

The vacuum truck operator is on site to begin draining water from the frac tanks. Today they will focus on draining the northern tank. The truck made 8 trips today, and removed everything with the exception of 7 inches of water.

Sonny’s crew continues to install well pipe, wiring, well cap, and valves within IW-26 and IW-26 well vaults.

5.0 DISCUSSIONS / MEETINGS

Personnel Involved:	NA
Location:	NA
Topics Covered:	NA

6.0 CQA TESTING PERFORMED ON-SITE

Location:	NA
Test:	NA

7.0 COMMENTS / ISSUES / OTHER

None

8.0 EQUIPMENT ONSITE

JD tractor/disc, Volvo compactor smooth drum, 2 Komatsu 210 excavators, SAKAI compactor sheep’s foot, JD excavator 270(removed 9/22/15), Komatsu dozer 39EX, Vermeer wood chipper(removed from site 9/8/15), Komatsu excavator 228, JD skid steer 329E, EXTEC soil screener, Komatsu dozer GPS equipped(delivered 9/9/15), Off-road (delivered 9/8/15). Loader delivered to Borrow pit 9/14/15. Grader onsite 10/14/15

9.0 PHOTOGRAPHS



Installation of access road on PCB Cells (Feb 26)



Conveyance piping and pressure valve installed within IW-26 (Feb 26)



Limits of Borrow Area excavation (Feb 26)



Pour of concrete footer around western vault in Area A (Feb 26)



Backfilling of low spot in Area A. Area was excavated, lined with reinforcing geotextile, and filled with riprap and concrete (Feb 26)



Raised guy wire in Area A (Feb 26)

FIELD MONITORING REPORT

Project No.:	1302962.CQA	**Project Title:**	OU-3 RA Cover Systems
Location:	Anniston, AL		
Owner:	Solutia, Inc.		
Contractor:	Taylor Corp.		

Date: Monday, February 29, 2016

1.0 SITE CONDITIONS

Weather Condition:	Clear, warm
Temperature:	48-73
Precipitation:	None

2.0 HEALTH AND SAFETY

Issues:	Periodically review SWPs

3.0 GOLDER PERSONNEL ON SITE

Name	Time on Site
Patrick Callahan	0700 to 1600

4.0 SUMMARY OF ACTIVITIES

Location: Autoclave

No activity

Location: Area E

The concrete footer was poured on 2/11/16

Location: PCB Cells

Taylor continues to work on the construction of the access road; they are currently working on the cul-de-sac. 10 oz geotextile and DGA is being placed.

Location: Area A

A majority of the area has been disc'ed and has been holding up well with the recent rain.

Robbie Brown's crew is forming up the wall around the easternmost vault.

Golder Associates Inc.
3730 Chamblee Tucker Road
Atlanta, GA 30341 USA
Tel: (770) 496-1893 Fax: (770) 934-9476 www.golder.com

Golder Associates: Operations in Africa, Asia, Australasia, Europe, North America and South America

Golder, Golder Associates and the GA globe design are trademarks of Golder Associates Corporation

Location: CMT Borrow Area

Material is being screened and stockpiled. Taylor has agreed to cut the floor of the borrow area to a 2% grade, but has not started significant excavation along the floor.

Location: Area C&D

No Activity

Location: Groundwater Extraction System

Sonny's crew is installing valves at the outlet of Basins 5 and 6.

5.0 DISCUSSIONS / MEETINGS

Personnel Involved:	NA
Location:	NA
Topics Covered:	NA

6.0 CQA TESTING PERFORMED ON-SITE

Location:	NA
Test:	NA

7.0 COMMENTS / ISSUES / OTHER

None

8.0 EQUIPMENT ONSITE

JD tractor/disc, Volvo compactor smooth drum, 2 Komatsu 210 excavators, SAKAI compactor sheep's foot, JD excavator 270(removed 9/22/15), Komatsu dozer 39EX, Vermeer wood chipper(removed from site 9/8/15), Komatsu excavator 228, JD skid steer 329E, EXTEC soil screener, Komatsu dozer GPS equipped(delivered 9/9/15), Off-road (delivered 9/8/15). Loader delivered to Borrow pit 9/14/15. Grader onsite 10/14/15

9.0 PHOTOGRAPHS



Installation of access road on PCB Cells (Feb 29)



Additional erosion control matting installed along edge of cover soil at PCB Cells (Feb 29)



Forming of wall around westernmost vault in Area A

FIELD MONITORING REPORT

Project No.:	1302962.CQA	**Project Title:**	OU-3 RA Cover Systems
Location:	Anniston, AL		
Owner:	Solutia, Inc.		
Contractor:	Taylor Corp.		

Date: Friday, March 9, 2016

1.0 SITE CONDITIONS

Weather Condition:	Clear, warm
Temperature:	55-79
Precipitation:	None

2.0 HEALTH AND SAFETY

Issues:	Wear protective eyeware and gloves while conducting RA activities

3.0 GOLDER PERSONNEL ON SITE

Name	Time on Site
Patrick Callahan	0800 to 1630
Shawn Casey	0700 to 1630
Steve Moeller	1000 to 1630

4.0 SUMMARY OF ACTIVITIES

Location: Autoclave

No activity

Location: Area E

A well extension, consisting of a 12-inch diameter sonotube placed at 19 inches above ground surface, was added to well T-06 in Area E. The sonotube was poured using 4000 concrete.

Location: PCB Cells

No activity

Location: Area A

Golder Associates Inc.
3730 Chamblee Tucker Road
Atlanta, GA 30341 USA
Tel: (770) 496-1893 Fax: (770) 934-9476 www.golder.com

Golder Associates: Operations in Africa, Asia, Australasia, Europe, North America and South America

Golder, Golder Associates and the GA globe design are trademarks of Golder Associates Corporation

The 6-inch subgrade layer was substantially completed today. Material is being hauled in from the CMT Borrow Area, spread using the low ground pressure dozier, and compacted using the sheeps-foot roller. Golder continued to perform compaction testing and depth checks.

Robbie Brown's crew completed the concrete pour of the pad around the western-most vault. This completes concrete work in Area A.

Location: CMT Borrow Area

The floor of the borrow area is being lowered to a 2% grade. Material is being hauled to Area A from the existing stockpile.

Location: Area C&D

No Activity

Location: Groundwater Extraction System

No activity.

5.0 DISCUSSIONS / MEETINGS

Personnel Involved:	RA Construction Team / RA EPA Team
Location:	Construction trailer and remediation office
Topics Covered:	Weekly update meetings

6.0 CQA TESTING PERFORMED ON-SITE

Location:	Area A subgrade
Test:	Nuclear density testing, depth checks, and four (4) samples collected for lab particle size testing.

7.0 COMMENTS / ISSUES / OTHER

None

8.0 EQUIPMENT ONSITE

JD tractor/disc, Volvo compactor smooth drum, 2 Komatsu 210 excavators, SAKAI compactor sheep's foot, JD excavator 270(removed 9/22/15), Komatsu dozer 39EX, Vermeer wood chipper(removed from site 9/8/15), Komatsu excavator 228, JD skid steer 329E, EXTEC soil screener, Komatsu dozer GPS equipped(delivered 9/9/15), Off-road (delivered 9/8/15). Loader delivered to Borrow pit 9/14/15. Grader onsite 10/14/15

9.0 PHOTOGRAPHS

Photograph 1:

Photograph 2:

Photograph 3:

FIELD MONITORING REPORT

Project No.:	1302962.CQA	**Project Title:**	OU-3 RA Cover Systems
Location:	Anniston, AL		
Owner:	Solutia, Inc.		
Contractor:	Taylor Corp.		

Date: Monday, March 14, 2016

1.0 SITE CONDITIONS

Weather Condition:	PC
Temperature:	62-81
Precipitation:	none

2.0 HEALTH AND SAFETY

Issues:	Hot work permits

3.0 GOLDER PERSONNEL ON SITE

Name	Time on Site
Shawn Casey	0630 To 1530
Steve Moeller	Not onsite

4.0 SUMMARY OF ACTIVITIES

Location: Autoclave

No activity

Location: Area E

Prepped area E for sub-grade, tilled the existing grass

Location: PCB Cells

No activity

Golder Associates Inc.
3730 Chamblee Tucker Road
Atlanta, GA 30341 USA
Tel: (770) 496-1893 Fax: (770) 934-9476 www.golder.com

Golder Associates: Operations in Africa, Asia, Australasia, Europe, North America and South America

Golder, Golder Associates and the GA globe design are trademarks of Golder Associates Corporation

Location: Area A

Area to wet to grade

Golder performed GPR both entrances near area A north and south. Results of the testing sent to Steve

Welding HDPE piping

Location: CMT Borrow Area

Working on the screener

Location: Area C&D

Removed silt fence along east limits

Location: Groundwater Extraction System

Taylor/Littleton Electric installed new wiring on the remaining wells well IW18,19 and 21. IW20 had new wiring installed by the plant. Contractor attached the wiring with electrical splice kit to the wiring that comes out of the pump

IW16 is still offline waiting on a replacement part(coil)

5.0 DISCUSSIONS / MEETINGS

Personnel Involved:	
Location:	
Topics Covered:	

6.0 CQA TESTING PERFORMED ON-SITE

Location:	
Test:	

7.0 COMMENTS / ISSUES / OTHER

None

8.0 EQUIPMENT ONSITE

JD tractor/disc, Volvo compactor smooth drum, 2 Komatsu 210 excavators, SAKAI compactor sheep's foot, JD excavator 270(removed 9/22/15), Komatsu dozer 39EX, Vermeer wood chipper(removed from site 9/8/15), Komatsu excavator 228, JD skid steer 329E, EXTEC soil screener, Komatsu dozer GPS equipped(delivered 9/9/15), Off-road (delivered 9/8/15). Loader delivered to Borrow pit 9/14/15. Grader onsite 10/14/15

9.0 PHOTOGRAPHS



GPR entrance to parking lot for boring



Chain was not attached to pump it was rusted out IW19



Well bracket IW18



Till area E for sub-grade

FIELD MONITORING REPORT

Project No.:	1302962.CQA	**Project Title:**	OU-3 RA Cover Systems
Location:	Anniston, AL		
Owner:	Solutia, Inc.		
Contractor:	Taylor Corp.		

Date: Tuesday, March 14, 2016

1.0 SITE CONDITIONS

Weather Condition:	CLR
Temperature:	53-89
Precipitation:	none

2.0 HEALTH AND SAFETY

Issues:	Hot work permits

3.0 GOLDER PERSONNEL ON SITE

Name	Time on Site
Shawn Casey	0630 To 1630
Steve Moeller	Not onsite

4.0 SUMMARY OF ACTIVITIES

Location: Autoclave

No activity

Location: Area E

Start placing sub-grade soil

Density testing and depth checks

Location: PCB Cells

No activity

Golder Associates Inc.
3730 Chamblee Tucker Road
Atlanta, GA 30341 USA
Tel: (770) 496-1893 Fax: (770) 934-9476 www.golder.com

Golder Associates: Operations in Africa, Asia, Australasia, Europe, North America and South America

Golder, Golder Associates and the GA globe design are trademarks of Golder Associates Corporation

Location: Area A

Grading site until 1400 when grader broke down

Plastic Fusion onsite prepping for liner deployment, staging sand bags and working on the setup for welding machines

Location: CMT Borrow Area

Working on the screener

Location: Area C&D

No activity

Location: Groundwater Extraction System

Still waiting on coil to be installed for IW16

5.0 DISCUSSIONS / MEETINGS

Personnel Involved:	
Location:	
Topics Covered:	

6.0 CQA TESTING PERFORMED ON-SITE

Location:	Area E
Test:	Depth checks and density testing

7.0 COMMENTS / ISSUES / OTHER

None

8.0 EQUIPMENT ONSITE

JD tractor/disc, Volvo compactor smooth drum, 2 Komatsu 210 excavators, SAKAI compactor sheep's foot, JD excavator 270(removed 9/22/15), Komatsu dozer 39EX, Vermeer wood chipper(removed from site 9/8/15), Komatsu excavator 228, JD skid steer 329E, EXTEC soil screener, Komatsu dozer GPS equipped(delivered 9/9/15), Off-road (delivered 9/8/15). Loader delivered to Borrow pit 9/14/15. Grader onsite 10/14/15

9.0 PHOTOGRAPHS



Grading area A



Start sub-grade area E



Smooth drum roll area A



Sub-grade west wall area E

FIELD MONITORING REPORT

Project No.:	1302962.CQA	**Project Title:**	OU-3 RA Cover Systems
Location:	Anniston, AL		
Owner:	Solutia, Inc.		
Contractor:	Taylor Corp.		

Date: Wednesday, March 14, 2016

1.0 SITE CONDITIONS

Weather Condition:	PC
Temperature:	68-89
Precipitation:	none

2.0 HEALTH AND SAFETY

Issues:	Site security

3.0 GOLDER PERSONNEL ON SITE

Name	Time on Site
Shawn Casey	0630 To 1800
Steve Moeller	0900 To 1500

4.0 SUMMARY OF ACTIVITIES

Location: Autoclave

No activity

Location: Area E

Doing finish grading around the wall

Depth checks and particle size

Location: PCB Cells

No activity

Golder Associates Inc.
3730 Chamblee Tucker Road
Atlanta, GA 30341 USA
Tel: (770) 496-1893 Fax: (770) 934-9476 www.golder.com

Golder Associates: Operations in Africa, Asia, Australasia, Europe, North America and South America

Golder, Golder Associates and the GA globe design are trademarks of Golder Associates Corporation

Location: Area A

0940 grader repaired con't to grade north side of area also did some finish grading around vaults/poles/wells

Plastic Fusion onsite prepping for liner deployment, staging sand bags and working on the setup for welding machines

Start deploying liner mid-morning finished the day with 45,400ft2

Location: CMT Borrow Area

Screening soil

Location: Area C&D

No activity

Location: Groundwater Extraction System

IW16 repaired late afternoon

5.0 DISCUSSIONS / MEETINGS

Personnel Involved:	
Location:	
Topics Covered:	

6.0 CQA TESTING PERFORMED ON-SITE

Location:	Area E
Test:	Depth checks and collect 2 particle size samples

7.0 COMMENTS / ISSUES / OTHER

None

8.0 EQUIPMENT ONSITE

JD tractor/disc, Volvo compactor smooth drum, 2 Komatsu 210 excavators, SAKAI compactor sheep's foot, JD excavator 270(removed 9/22/15), Komatsu dozer 39EX, Vermeer wood chipper(removed from site 9/8/15), Komatsu excavator 228, JD skid steer 329E, EXTEC soil screener, Komatsu dozer GPS equipped(delivered 9/9/15), Off-road (delivered 9/8/15). Loader delivered to Borrow pit 9/14/15. Grader onsite 10/14/15

9.0 PHOTOGRAPHS



Area E sub-grade



First panel area A



Liner deployed today approx. 45,400ft2

FIELD MONITORING REPORT

Project No.:	1302962.CQA	**Project Title:**	OU-3 RA Cover Systems
Location:	Anniston, AL		
Owner:	Solutia, Inc.		
Contractor:	Taylor Corp.		

Date: Thursday, March 17, 2016

1.0 SITE CONDITIONS

Weather Condition:	PC
Temperature:	48-73
Precipitation:	none

2.0 HEALTH AND SAFETY

Issues:	Don't rush your work

3.0 GOLDER PERSONNEL ON SITE

Name	Time on Site
Shawn Casey	0630 To 1800
Steve Moeller	

4.0 SUMMARY OF ACTIVITIES

Location: Autoclave

No activity

Location: Area E

Smooth drum roll area

Location: PCB Cells

No activity

Golder Associates Inc.
3730 Chamblee Tucker Road
Atlanta, GA 30341 USA
Tel: (770) 496-1893 Fax: (770) 934-9476 www.golder.com

Golder Associates: Operations in Africa, Asia, Australasia, Europe, North America and South America

Golder, Golder Associates and the GA globe design are trademarks of Golder Associates Corporation

Location: Area A

Continue to deploy and fusion weld seams along with air testing. Deployed and fusion welded approx. 75,000ft2 of liner

Location: CMT Borrow Area

Screening soil all day

Location: Area C&D

No activity

Location: Groundwater Extraction System

No activity

5.0 DISCUSSIONS / MEETINGS

Personnel Involved:	
Location:	
Topics Covered:	

6.0 CQA TESTING PERFORMED ON-SITE

Location:	Area A
Test:	Liner installation

7.0 COMMENTS / ISSUES / OTHER

None

8.0 EQUIPMENT ONSITE

JD tractor/disc, Volvo compactor smooth drum, 2 Komatsu 210 excavators, SAKAI compactor sheep's foot, JD excavator 270(removed 9/22/15), Komatsu dozer 39EX, Vermeer wood chipper(removed from site 9/8/15), Komatsu excavator 228, JD skid steer 329E, EXTEC soil screener, Komatsu dozer GPS equipped(delivered 9/9/15), Off-road (delivered 9/8/15). Loader delivered to Borrow pit 9/14/15. Grader onsite 10/14/15

9.0 PHOTOGRAPHS



Fusion welding seam Area A



Deploying around vaults area A



Liner deployed around vaults Area A

FIELD MONITORING REPORT

Project No.:	1302962.CQA	**Project Title:**	OU-3 RA Cover Systems
Location:	Anniston, AL		
Owner:	Solutia, Inc.		
Contractor:	Taylor Corp.		

Date: Friday, March 18, 2016

1.0 SITE CONDITIONS

Weather Condition:	PC to cloudy in the afternoon
Temperature:	50- 70
Precipitation:	none

2.0 HEALTH AND SAFETY

Issues:	Overhead lines

3.0 GOLDER PERSONNEL ON SITE

Name	Time on Site
Shawn Casey	0630 To 1630
Steve Moeller	

4.0 SUMMARY OF ACTIVITIES

Location: Autoclave

No activity

Location: Area E

Smooth drum roll area

Location: PCB Cells

No activity

Golder Associates Inc.
3730 Chamblee Tucker Road
Atlanta, GA 30341 USA
Tel: (770) 496-1893 Fax: (770) 934-9476 www.golder.com

Golder Associates: Operations in Africa, Asia, Australasia, Europe, North America and South America

Golder, Golder Associates and the GA globe design are trademarks of Golder Associates Corporation

Location: Area A

Continue to deploy and fusion weld seams along with air testing. Deployed and fusion welded approx. 45,000ft2

Area A is complete for liner deployment and pressure testing

Location: CMT Borrow Area

Screening soil all day

Location: Area C&D

No activity

Location: Groundwater Extraction System

New valve installed at basin on platform. There was only one installed previously by Taylor should have been 2

5.0 DISCUSSIONS / MEETINGS

Personnel Involved:	
Location:	
Topics Covered:	

6.0 CQA TESTING PERFORMED ON-SITE

Location:	Area A
Test:	Liner installation

7.0 COMMENTS / ISSUES / OTHER

None

8.0 EQUIPMENT ONSITE

JD tractor/disc, Volvo compactor smooth drum, 2 Komatsu 210 excavators, SAKAI compactor sheep's foot, JD excavator 270(removed 9/22/15), Komatsu dozer 39EX, Vermeer wood chipper(removed from site 9/8/15), Komatsu excavator 228, JD skid steer 329E, EXTEC soil screener, Komatsu dozer GPS equipped(delivered 9/9/15), Off-road (delivered 9/8/15). Loader delivered to Borrow pit 9/14/15. Grader onsite 10/14/15

9.0 PHOTOGRAPHS



Liner north side area A

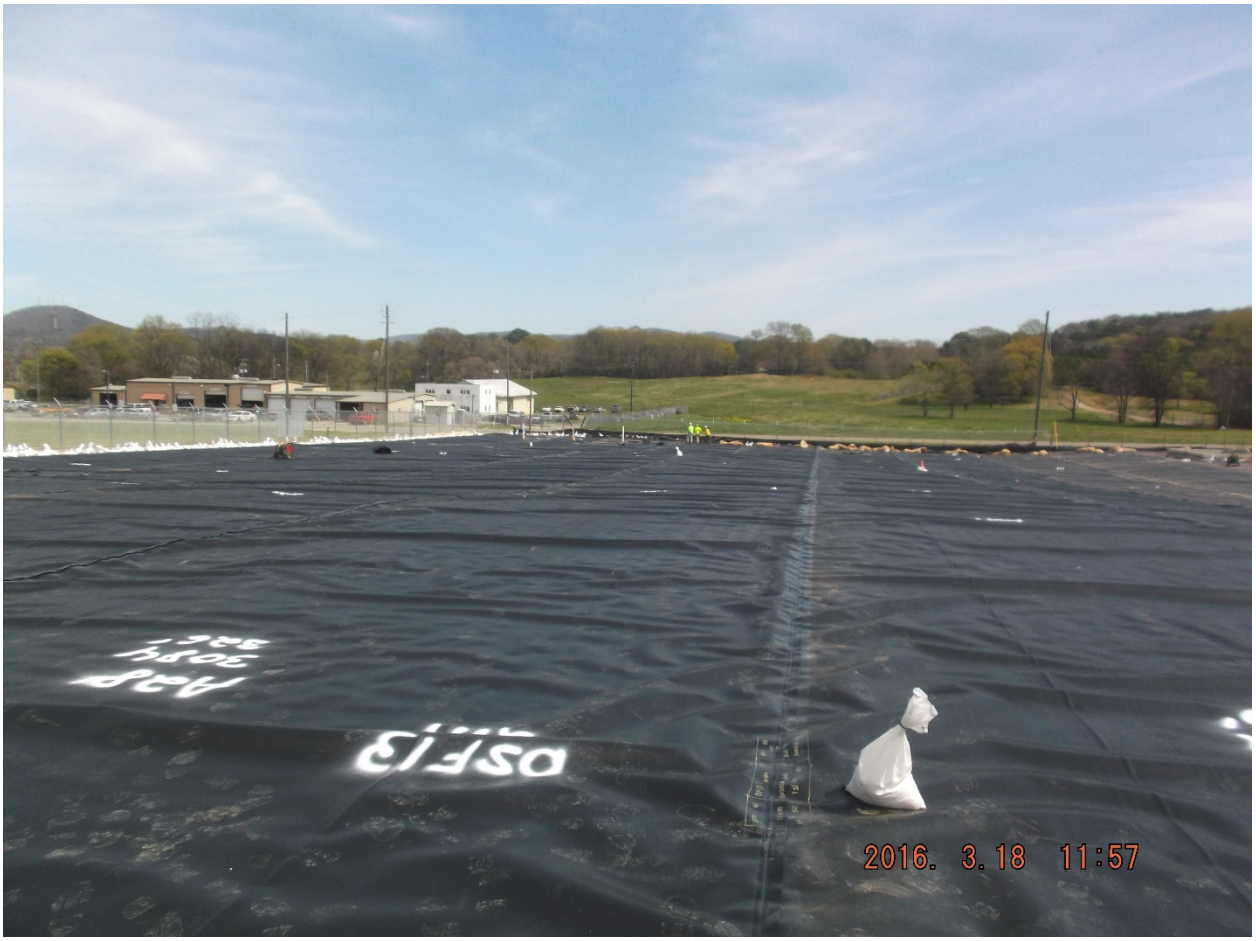

Deployment complete area A

FIELD MONITORING REPORT

Project No.:	1302962.CQA	**Project Title:**	OU-3 RA Cover Systems
Location:	Anniston, AL		
Owner:	Solutia, Inc.		
Contractor:	Taylor Corp.		

Date: sunday, March 20, 2016

1.0 SITE CONDITIONS

Weather Condition:	PC
Temperature:	42-53
Precipitation:	none

2.0 HEALTH AND SAFETY

Issues:	

3.0 GOLDER PERSONNEL ON SITE

Name	Time on Site
Shawn Casey	0630 To 1530
Steve Moeller	

4.0 SUMMARY OF ACTIVITIES

Location: Autoclave

No activity

Location: Area E

No activity

Location: PCB Cells

No activity

Golder Associates Inc.
3730 Chamblee Tucker Road
Atlanta, GA 30341 USA
Tel: (770) 496-1893 Fax: (770) 934-9476 www.golder.com

Golder Associates: Operations in Africa, Asia, Australasia, Europe, North America and South America

Golder, Golder Associates and the GA globe design are trademarks of Golder Associates Corporation

Location: Area A

Repairs and vbox testing of patch's

Location: CMT Borrow Area

Screening soil 1/2day

Location: Area C&D

No activity

Location: Groundwater Extraction System

No activity

5.0 DISCUSSIONS / MEETINGS

Personnel Involved:	
Location:	
Topics Covered:	

6.0 CQA TESTING PERFORMED ON-SITE

Location:	Area A
Test:	Liner installation

7.0 COMMENTS / ISSUES / OTHER

None

8.0 EQUIPMENT ONSITE

JD tractor/disc, Volvo compactor smooth drum, 2 Komatsu 210 excavators, SAKAI compactor sheep's foot, JD excavator 270(removed 9/22/15), Komatsu dozer 39EX, Vermeer wood chipper(removed from site 9/8/15), Komatsu excavator 228, JD skid steer 329E, EXTEC soil screener, Komatsu dozer GPS equipped(delivered 9/9/15), Off-road (delivered 9/8/15). Loader delivered to Borrow pit 9/14/15. Grader onsite 10/14/15

9.0 PHOTOGRAPHS



Repairs on destructs

FIELD MONITORING REPORT

Project No.:	1302962.CQA	**Project Title:**	OU-3 RA Cover Systems
Location:	Anniston, AL		
Owner:	Solutia, Inc.		
Contractor:	Taylor Corp.		

Date: MOnday, March 20, 2016

1.0 SITE CONDITIONS

Weather Condition:	CLR
Temperature:	35-57
Precipitation:	none

2.0 HEALTH AND SAFETY

Issues:	fatigue

3.0 GOLDER PERSONNEL ON SITE

Name	Time on Site
Shawn Casey	0630 To 1700
Steve Moeller	

4.0 SUMMARY OF ACTIVITIES

Location: Autoclave

No activity

Location: Area E

No activity

Location: PCB Cells

No activity

Golder Associates Inc.
3730 Chamblee Tucker Road
Atlanta, GA 30341 USA
Tel: (770) 496-1893 Fax: (770) 934-9476 www.golder.com

Golder Associates: Operations in Africa, Asia, Australasia, Europe, North America and South America

Golder, Golder Associates and the GA globe design are trademarks of Golder Associates Corporation

Location: Area A

Repairing boots and skirts on vaults and wells/poles

Location: CMT Borrow Area

Screening soil

Location: Area C&D

No activity

Location: Groundwater Extraction System

No activity

5.0 DISCUSSIONS / MEETINGS

Personnel Involved:	
Location:	
Topics Covered:	

6.0 CQA TESTING PERFORMED ON-SITE

Location:	Area A
Test:	Liner installation

7.0 COMMENTS / ISSUES / OTHER

None

8.0 EQUIPMENT ONSITE

JD tractor/disc, Volvo compactor smooth drum, 2 Komatsu 210 excavators, SAKAI compactor sheep's foot, JD excavator 270(removed 9/22/15), Komatsu dozer 39EX, Vermeer wood chipper(removed from site 9/8/15), Komatsu excavator 228, JD skid steer 329E, EXTEC soil screener, Komatsu dozer GPS equipped(delivered 9/9/15), Off-road (delivered 9/8/15). Loader delivered to Borrow pit 9/14/15. Grader onsite 10/14/15

9.0 PHOTOGRAPHS



Boot and skirt vaults area A



BS wells area A



BS guide wire area A

FIELD MONITORING REPORT

Project No.:	1302962.CQA	**Project Title:**	OU-3 RA Cover Systems
Location:	Anniston, AL		
Owner:	Solutia, Inc.		
Contractor:	Taylor Corp.		

Date: Tuesday, March 22, 2016

1.0 SITE CONDITIONS

Weather Condition:	CLR
Temperature:	33-65
Precipitation:	none

2.0 HEALTH AND SAFETY

Issues:	Situational awareness

3.0 GOLDER PERSONNEL ON SITE

Name	Time on Site
Shawn Casey	0630 To 1630
Steve Moeller	

4.0 SUMMARY OF ACTIVITIES

Location: Autoclave

No activity

Location: Area E

No activity

Location: PCB Cells

No activity

Golder Associates Inc.
3730 Chamblee Tucker Road
Atlanta, GA 30341 USA
Tel: (770) 496-1893 Fax: (770) 934-9476 www.golder.com

Golder Associates: Operations in Africa, Asia, Australasia, Europe, North America and South America

Golder, Golder Associates and the GA globe design are trademarks of Golder Associates Corporation

Location: Area A

Repairing boots and skirts on vaults and wells/poles along with Vbox testing

Location: CMT Borrow Area

Screening soil

Location: Area C&D

No activity

Location: Groundwater Extraction System

No activity

5.0 DISCUSSIONS / MEETINGS

Personnel Involved:	
Location:	
Topics Covered:	

6.0 CQA TESTING PERFORMED ON-SITE

Location:	Area A
Test:	Liner installation

7.0 COMMENTS / ISSUES / OTHER

None

8.0 EQUIPMENT ONSITE

JD tractor/disc, Volvo compactor smooth drum, 2 Komatsu 210 excavators, SAKAI compactor sheep's foot, JD excavator 270(removed 9/22/15), Komatsu dozer 39EX, Vermeer wood chipper(removed from site 9/8/15), Komatsu excavator 228, JD skid steer 329E, EXTEC soil screener, Komatsu dozer GPS equipped(delivered 9/9/15), Off-road (delivered 9/8/15). Loader delivered to Borrow pit 9/14/15. Grader onsite 10/14/15

9.0 PHOTOGRAPHS



Baton bar on vault to hold liner



Vbox testing extrusion welds



Extension added to A8-12 SE corner area A to get liner closer to fence

FIELD MONITORING REPORT

Project No.:	1302962.CQA	**Project Title:**	OU-3 RA Cover Systems
Location:	Anniston, AL		
Owner:	Solutia, Inc.		
Contractor:	Taylor Corp.		

Date: Wednesday, March 23, 2016

1.0 SITE CONDITIONS

Weather Condition:	CLR
Temperature:	50-68
Precipitation:	none

2.0 HEALTH AND SAFETY

Issues:	Situational awareness

3.0 GOLDER PERSONNEL ON SITE

Name	Time on Site
Shawn Casey	0630 To 1700
Steve Moeller	

4.0 SUMMARY OF ACTIVITIES

Location: Autoclave

No activity

Location: Area E

Deploy and fusion weld liner

Location: PCB Cells

No activity

Golder Associates Inc.
3730 Chamblee Tucker Road
Atlanta, GA 30341 USA
Tel: (770) 496-1893 Fax: (770) 934-9476 www.golder.com

Golder Associates: Operations in Africa, Asia, Australasia, Europe, North America and South America

Golder, Golder Associates and the GA globe design are trademarks of Golder Associates Corporation

Location: Area A

No activity

Location: CMT Borrow Area

Screening soil

Location: Area C&D

No activity

Location: Groundwater Extraction System

No activity

5.0 DISCUSSIONS / MEETINGS

Personnel Involved:	
Location:	
Topics Covered:	

6.0 CQA TESTING PERFORMED ON-SITE

Location:	Area A
Test:	Liner installation

7.0 COMMENTS / ISSUES / OTHER

None

8.0 EQUIPMENT ONSITE

JD tractor/disc, Volvo compactor smooth drum, 2 Komatsu 210 excavators, SAKAI compactor sheep's foot, JD excavator 270(removed 9/22/15), Komatsu dozer 39EX, Vermeer wood chipper(removed from site 9/8/15), Komatsu excavator 228, JD skid steer 329E, EXTEC soil screener, Komatsu dozer GPS equipped(delivered 9/9/15), Off-road (delivered 9/8/15). Loader delivered to Borrow pit 9/14/15. Grader onsite 10/14/15

9.0 PHOTOGRAPHS



Start deployment of liner Area E

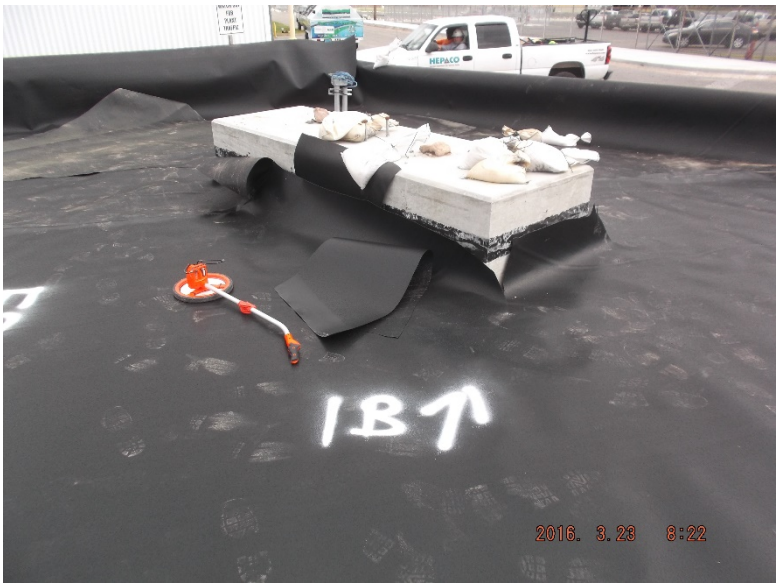

Area E



Area not lined in Area E b/c wall is not complete SW corner

FIELD MONITORING REPORT

Project No.:	1302962.CQA	**Project Title:**	OU-3 RA Cover Systems
Location:	Anniston, AL		
Owner:	Solutia, Inc.		
Contractor:	Taylor Corp.		

Date: Wednesday, March 23, 2016

1.0 SITE CONDITIONS

Weather Condition:	Cloudy/rain
Temperature:	55-70
Precipitation:	0.3in

2.0 HEALTH AND SAFETY

Issues:	

3.0 GOLDER PERSONNEL ON SITE

Name	Time on Site
Shawn Casey	0630 To 1300
Steve Moeller	

4.0 SUMMARY OF ACTIVITIES

Location: Autoclave

No activity

Location: Area E

Start repairs

Location: PCB Cells

No activity

Golder Associates Inc.
3730 Chamblee Tucker Road
Atlanta, GA 30341 USA
Tel: (770) 496-1893 Fax: (770) 934-9476 www.golder.com

Golder Associates: Operations in Africa, Asia, Australasia, Europe, North America and South America

Golder, Golder Associates and the GA globe design are trademarks of Golder Associates Corporation

Location: Area A

No activity

Location: CMT Borrow Area

Screening soil

Location: Area C&D

No activity

Location: Groundwater Extraction System

No activity

5.0 DISCUSSIONS / MEETINGS

Personnel Involved:	
Location:	
Topics Covered:	

6.0 CQA TESTING PERFORMED ON-SITE

Location:	Area A
Test:	Liner installation

7.0 COMMENTS / ISSUES / OTHER

None

8.0 EQUIPMENT ONSITE

JD tractor/disc, Volvo compactor smooth drum, 2 Komatsu 210 excavators, SAKAI compactor sheep's foot, JD excavator 270(removed 9/22/15), Komatsu dozer 39EX, Vermeer wood chipper(removed from site 9/8/15), Komatsu excavator 228, JD skid steer 329E, EXTEC soil screener, Komatsu dozer GPS equipped(delivered 9/9/15), Off-road (delivered 9/8/15). Loader delivered to Borrow pit 9/14/15. Grader onsite 10/14/15

9.0 PHOTOGRAPHS

Didn’t take any pics today

FIELD MONITORING REPORT

Project No.:	1302962.CQA	**Project Title:**	OU-3 RA Cover Systems
Location:	Anniston, AL		
Owner:	Solutia, Inc.		
Contractor:	Taylor Corp.		

Date: Friday, March 25, 2016

1.0 SITE CONDITIONS

Weather Condition:	sunny
Temperature:	53-72
Precipitation:	none

2.0 HEALTH AND SAFETY

Issues:	

3.0 GOLDER PERSONNEL ON SITE

Name	Time on Site
Shawn Casey	0630 To 1530
Steve Moeller	

4.0 SUMMARY OF ACTIVITIES

Location: Autoclave

No activity

Location: Area E

Lister liner to the polylock on concrete wall

Location: PCB Cells

No activity

Golder Associates Inc.
3730 Chamblee Tucker Road
Atlanta, GA 30341 USA
Tel: (770) 496-1893 Fax: (770) 934-9476 www.golder.com

Golder Associates: Operations in Africa, Asia, Australasia, Europe, North America and South America

Golder, Golder Associates and the GA globe design are trademarks of Golder Associates Corporation

Location: Area A

No activity

Location: CMT Borrow Area

Screening soil

Location: Area C&D

No activity

Location: Groundwater Extraction System

Replaced pump and chain on IW19

5.0 DISCUSSIONS / MEETINGS

Personnel Involved:	
Location:	
Topics Covered:	

6.0 CQA TESTING PERFORMED ON-SITE

Location:	Area A
Test:	Liner installation

7.0 COMMENTS / ISSUES / OTHER

None

8.0 EQUIPMENT ONSITE

JD tractor/disc, Volvo compactor smooth drum, 2 Komatsu 210 excavators, SAKAI compactor sheep's foot, JD excavator 270(removed 9/22/15), Komatsu dozer 39EX, Vermeer wood chipper(removed from site 9/8/15), Komatsu excavator 228, JD skid steer 329E, EXTEC soil screener, Komatsu dozer GPS equipped(delivered 9/9/15), Off-road (delivered 9/8/15). Loader delivered to Borrow pit 9/14/15. Grader onsite 10/14/15

9.0 PHOTOGRAPHS



Water from previous day's rain area E



Switch out GW pump IW19



Lister liner to polylock on wall area E all day

FIELD MONITORING REPORT

Project No.:	1302962.CQA	**Project Title:**	OU-3 RA Cover Systems
Location:	Anniston, AL		
Owner:	Solutia, Inc.		
Contractor:	Taylor Corp.		

Date: Saturday, March 26, 2016

1.0 SITE CONDITIONS

Weather Condition:	sunny
Temperature:	48-60
Precipitation:	Light rain 1300

2.0 HEALTH AND SAFETY

Issues:	Power tools

3.0 GOLDER PERSONNEL ON SITE

Name	Time on Site
Shawn Casey	0630 To 1300
Steve Moeller	

4.0 SUMMARY OF ACTIVITIES

Location: Autoclave

No activity

Location: Area E

Weld liner to polyock on wall

Location: PCB Cells

Installing fencing

Golder Associates Inc.
3730 Chamblee Tucker Road
Atlanta, GA 30341 USA
Tel: (770) 496-1893 Fax: (770) 934-9476 www.golder.com

Golder Associates: Operations in Africa, Asia, Australasia, Europe, North America and South America

Golder, Golder Associates and the GA globe design are trademarks of Golder Associates Corporation

Location: Area A

No activity

Location: CMT Borrow Area

Screening soil

Location: Area C&D

No activity

Location: Groundwater Extraction System

5.0 DISCUSSIONS / MEETINGS

Personnel Involved:	
Location:	
Topics Covered:	

6.0 CQA TESTING PERFORMED ON-SITE

Location:	Area E
Test:	Liner installation

7.0 COMMENTS / ISSUES / OTHER

None

8.0 EQUIPMENT ONSITE

JD tractor/disc, Volvo compactor smooth drum, 2 Komatsu 210 excavators, SAKAI compactor sheep's foot, JD excavator 270(removed 9/22/15), Komatsu dozer 39EX, Vermeer wood chipper(removed from site 9/8/15), Komatsu excavator 228, JD skid steer 329E, EXTEC soil screener, Komatsu dozer GPS equipped(delivered 9/9/15), Off-road (delivered 9/8/15). Loader delivered to Borrow pit 9/14/15. Grader onsite 10/14/15

9.0 PHOTOGRAPHS



Extrusion weld liner to polylock area E

FIELD MONITORING REPORT

Project No.:	1302962.CQA	**Project Title:**	OU-3 RA Cover Systems
Location:	Anniston, AL		
Owner:	Solutia, Inc.		
Contractor:	Taylor Corp.		

Date: Monday, March 28, 2016

1.0 SITE CONDITIONS

Weather Condition:	sunny
Temperature:	50-70
Precipitation:	0.8in on sunday

2.0 HEALTH AND SAFETY

Issues:	Slips trips and falls

3.0 GOLDER PERSONNEL ON SITE

Name	Time on Site
Shawn Casey	0630 To 1600
Steve Moeller	

4.0 SUMMARY OF ACTIVITIES

Location: Autoclave

No activity

Location: Area E

BS electric box/baton bar drain pipe and put the bands on the boots for the light pole

Location: PCB Cells

Golder Associates Inc.
3730 Chamblee Tucker Road
Atlanta, GA 30341 USA
Tel: (770) 496-1893 Fax: (770) 934-9476 www.golder.com

Golder Associates: Operations in Africa, Asia, Australasia, Europe, North America and South America

Golder, Golder Associates and the GA globe design are trademarks of Golder Associates Corporation

Location: Area A

Stage textile

Location: CMT Borrow Area

To wet to screen soil

Location: Area C&D

No activity

Location: Groundwater Extraction System

Excavated a couple of trench's north of area A looking for lines. Found 3. 2 of the lines approx. 2-2.5ft bgs and the gas line was 5ft bgs

5.0 DISCUSSIONS / MEETINGS

Personnel Involved:	
Location:	
Topics Covered:	

6.0 CQA TESTING PERFORMED ON-SITE

Location:	Area E
Test:	Liner installation

7.0 COMMENTS / ISSUES / OTHER

None

8.0 EQUIPMENT ONSITE

JD tractor/disc, Volvo compactor smooth drum, 2 Komatsu 210 excavators, SAKAI compactor sheep's foot, JD excavator 270(removed 9/22/15), Komatsu dozer 39EX, Vermeer wood chipper(removed from site 9/8/15), Komatsu excavator 228, JD skid steer 329E, EXTEC soil screener, Komatsu dozer GPS equipped(delivered 9/9/15), Off-road (delivered 9/8/15). Loader delivered to Borrow pit 9/14/15. Grader onsite 10/14/15

9.0 PHOTOGRAPHS



Vbox liner on wall area E



Baton bar around drain pipe area E

FIELD MONITORING REPORT

Project No.:	1302962.CQA	**Project Title:**	OU-3 RA Cover Systems
Location:	Anniston, AL		
Owner:	Solutia, Inc.		
Contractor:	Taylor Corp.		

Date: Tuesday, March 29, 2016

1.0 SITE CONDITIONS

Weather Condition:	sunny
Temperature:	43-68
Precipitation:	none

2.0 HEALTH AND SAFETY

Issues:	PPE

3.0 GOLDER PERSONNEL ON SITE

Name	Time on Site
Shawn Casey	0630 To 1600
Steve Moeller	

4.0 SUMMARY OF ACTIVITIES

Location: Autoclave

No activity

Location: Area E

Install composite completed just after lunch

Location: PCB Cells

Golder Associates Inc.
3730 Chamblee Tucker Road
Atlanta, GA 30341 USA
Tel: (770) 496-1893 Fax: (770) 934-9476 www.golder.com

Golder Associates: Operations in Africa, Asia, Australasia, Europe, North America and South America

Golder, Golder Associates and the GA globe design are trademarks of Golder Associates Corporation

Location: Area A

Start composite SW corner

Location: CMT Borrow Area

No activity

Location: Area C&D

No activity

Location: Groundwater Extraction System

Install piping with boring drill rig NE and SE corner of area A

5.0 DISCUSSIONS / MEETINGS

Personnel Involved:	
Location:	
Topics Covered:	

6.0 CQA TESTING PERFORMED ON-SITE

Location:	Area E
Test:	Liner installation

7.0 COMMENTS / ISSUES / OTHER

None

8.0 EQUIPMENT ONSITE

JD tractor/disc, Volvo compactor smooth drum, 2 Komatsu 210 excavators, SAKAI compactor sheep's foot, JD excavator 270(removed 9/22/15), Komatsu dozer 39EX, Vermeer wood chipper(removed from site 9/8/15), Komatsu excavator 228, JD skid steer 329E, EXTEC soil screener, Komatsu dozer GPS equipped(delivered 9/9/15), Off-road (delivered 9/8/15). Loader delivered to Borrow pit 9/14/15. Grader onsite 10/14/15

9.0 PHOTOGRAPHS



Start composite area E



Composite area E



Vacuum slurry for boring



Pulling pipe through boring hole



Boring hole NE corner area A

FIELD MONITORING REPORT

Project No.:	1302962.CQA	**Project Title:**	OU-3 RA Cover Systems
Location:	Anniston, AL		
Owner:	Solutia, Inc.		
Contractor:	Taylor Corp.		

Date: Tuesday, March 29, 2016

1.0 SITE CONDITIONS

Weather Condition:	sunny
Temperature:	50-75
Precipitation:	none

2.0 HEALTH AND SAFETY

Issues:	Prep for rain

3.0 GOLDER PERSONNEL ON SITE

Name	Time on Site
Shawn Casey	0630 To 1630
Steve Moeller	

4.0 SUMMARY OF ACTIVITIES

Location: Autoclave

No activity

Location: Area E

Start cover soil area E

Location: PCB Cells

Golder Associates Inc.
3730 Chamblee Tucker Road
Atlanta, GA 30341 USA
Tel: (770) 496-1893 Fax: (770) 934-9476 www.golder.com

Golder Associates: Operations in Africa, Asia, Australasia, Europe, North America and South America

Golder, Golder Associates and the GA globe design are trademarks of Golder Associates Corporation

Location: Area A

Continue composite working south to north area A. placed soil at the west vault bottom of drive way to try to protect liner from getting water under it

Location: CMT Borrow Area

Screen soil and load trucks

Location: Area C&D

No activity

Location: Groundwater Extraction System

5.0 DISCUSSIONS / MEETINGS

Personnel Involved:	
Location:	
Topics Covered:	

6.0 CQA TESTING PERFORMED ON-SITE

Location:	Area E
Test:	Liner installation

7.0 COMMENTS / ISSUES / OTHER

None

8.0 EQUIPMENT ONSITE

JD tractor/disc, Volvo compactor smooth drum, 2 Komatsu 210 excavators, SAKAI compactor sheep's foot, JD excavator 270(removed 9/22/15), Komatsu dozer 39EX, Vermeer wood chipper(removed from site 9/8/15), Komatsu excavator 228, JD skid steer 329E, EXTEC soil screener, Komatsu dozer GPS equipped(delivered 9/9/15), Off-road (delivered 9/8/15). Loader delivered to Borrow pit 9/14/15. Grader onsite 10/14/15

9.0 PHOTOGRAPHS



Boot on boring pipe SE corner area A



Placing cover soil area E



Placed soil along bottom of drive way near west vault area A to protect liner from stormwater

FIELD MONITORING REPORT

Project No.:	1302962.CQA	**Project Title:**	OU-3 RA Cover Systems
Location:	Anniston, AL		
Owner:	Solutia, Inc.		
Contractor:	Taylor Corp.		

Date: Tuesday, March 29, 2016

1.0 SITE CONDITIONS

Weather Condition:	cloudy
Temperature:	50-75
Precipitation:	Started raining 0900 site received 1.1in of rain

2.0 HEALTH AND SAFETY

Issues:	Wet roads

3.0 GOLDER PERSONNEL ON SITE

Name	Time on Site
Shawn Casey	0630 To 0900
Steve Moeller	

4.0 SUMMARY OF ACTIVITIES

Location: Autoclave

No activity

Location: Area E

No activity

Location: PCB Cells

Golder Associates Inc.
3730 Chamblee Tucker Road
Atlanta, GA 30341 USA
Tel: (770) 496-1893 Fax: (770) 934-9476 www.golder.com

Golder Associates: Operations in Africa, Asia, Australasia, Europe, North America and South America

Golder, Golder Associates and the GA globe design are trademarks of Golder Associates Corporation

Location: Area A

Deployed approx. 5 rolls of composite before the rain started

Location: CMT Borrow Area

Screen soil and load trucks

Location: Area C&D

No activity

Location: Groundwater Extraction System

5.0 DISCUSSIONS / MEETINGS

Personnel Involved:	
Location:	
Topics Covered:	

6.0 CQA TESTING PERFORMED ON-SITE

Location:	Area E
Test:	Liner installation

7.0 COMMENTS / ISSUES / OTHER

None

8.0 EQUIPMENT ONSITE

JD tractor/disc, Volvo compactor smooth drum, 2 Komatsu 210 excavators, SAKAI compactor sheep's foot, JD excavator 270(removed 9/22/15), Komatsu dozer 39EX, Vermeer wood chipper(removed from site 9/8/15), Komatsu excavator 228, JD skid steer 329E, EXTEC soil screener, Komatsu dozer GPS equipped(delivered 9/9/15), Off-road (delivered 9/8/15). Loader delivered to Borrow pit 9/14/15. Grader onsite 10/14/15

9.0 PHOTOGRAPHS



Area E cover soil

FIELD MONITORING REPORT

Project No.:	1302962.CQA	**Project Title:**	OU-3 RA Cover Systems
Location:	Anniston, AL		
Owner:	Solutia, Inc.		
Contractor:	Taylor Corp.		

Date: Friday, April 1, 2016

1.0 SITE CONDITIONS

Weather Condition:	cloudy
Temperature:	65-68
Precipitation:	none

2.0 HEALTH AND SAFETY

Issues:	Refresher training for Taylor

3.0 GOLDER PERSONNEL ON SITE

Name	Time on Site
Shawn Casey	0630 To 1530
Steve Moeller	

4.0 SUMMARY OF ACTIVITIES

Location: Autoclave

No activity

Location: Area E

No activity

Location: PCB Cells

Golder Associates Inc.
3730 Chamblee Tucker Road
Atlanta, GA 30341 USA
Tel: (770) 496-1893 Fax: (770) 934-9476 www.golder.com

Golder Associates: Operations in Africa, Asia, Australasia, Europe, North America and South America

Golder, Golder Associates and the GA globe design are trademarks of Golder Associates Corporation

Location: Area A

Finish up deploying composite mid- morning then start to sew seams on composite

Location: CMT Borrow Area

No activity

Location: Area C&D

No activity

Location: Groundwater Extraction System

5.0 DISCUSSIONS / MEETINGS

Personnel Involved:	
Location:	
Topics Covered:	

6.0 CQA TESTING PERFORMED ON-SITE

Location:	Area E
Test:	Liner installation

7.0 COMMENTS / ISSUES / OTHER

None

8.0 EQUIPMENT ONSITE

JD tractor/disc, Volvo compactor smooth drum, 2 Komatsu 210 excavators, SAKAI compactor sheep's foot, JD excavator 270(removed 9/22/15), Komatsu dozer 39EX, Vermeer wood chipper(removed from site 9/8/15), Komatsu excavator 228, JD skid steer 329E, EXTEC soil screener, Komatsu dozer GPS equipped(delivered 9/9/15), Off-road (delivered 9/8/15). Loader delivered to Borrow pit 9/14/15. Grader onsite 10/14/15

9.0 PHOTOGRAPHS



Soil protection for liner at west vault



Finish up deploying composite

FIELD MONITORING REPORT

Project No.:	1302962.CQA	**Project Title:**	OU-3 RA Cover Systems
Location:	Anniston, AL		
Owner:	Solutia, Inc.		
Contractor:	Taylor Corp.		

Date: Saturday, April 1, 2016

1.0 SITE CONDITIONS

Weather Condition:	clear
Temperature:	42-65
Precipitation:	Started raining 0900 site received 1.1in of rain

2.0 HEALTH AND SAFETY

Issues:	Wet roads

3.0 GOLDER PERSONNEL ON SITE

Name	Time on Site
Shawn Casey	0630 To 1400
Steve Moeller	

4.0 SUMMARY OF ACTIVITIES

Location: Autoclave

No activity

Location: Area E

No activity

Location: PCB Cells

Golder Associates Inc.
3730 Chamblee Tucker Road
Atlanta, GA 30341 USA
Tel: (770) 496-1893 Fax: (770) 934-9476 www.golder.com

Golder Associates: Operations in Africa, Asia, Australasia, Europe, North America and South America

Golder, Golder Associates and the GA globe design are trademarks of Golder Associates Corporation

Location: Area A

Finish up boots with composite and end to end seams. Composite completed today for area A

Location: CMT Borrow Area

No activity

Location: Area C&D

No activity

Location: Groundwater Extraction System

5.0 DISCUSSIONS / MEETINGS

Personnel Involved:	
Location:	
Topics Covered:	

6.0 CQA TESTING PERFORMED ON-SITE

Location:	Area E
Test:	Liner installation

7.0 COMMENTS / ISSUES / OTHER

None

8.0 EQUIPMENT ONSITE

JD tractor/disc, Volvo compactor smooth drum, 2 Komatsu 210 excavators, SAKAI compactor sheep's foot, JD excavator 270(removed 9/22/15), Komatsu dozer 39EX, Vermeer wood chipper(removed from site 9/8/15), Komatsu excavator 228, JD skid steer 329E, EXTEC soil screener, Komatsu dozer GPS equipped(delivered 9/9/15), Off-road (delivered 9/8/15). Loader delivered to Borrow pit 9/14/15. Grader onsite 10/14/15

9.0 PHOTOGRAPHS



Liner folded back over the composite



Same as above



North side Area A

FIELD MONITORING REPORT

Project No.:	1302962.CQA	**Project Title:**	OU-3 RA Cover Systems
Location:	Anniston, AL		
Owner:	Solutia, Inc.		
Contractor:	Taylor Corp.		

Date: Monday, April 4, 2016

1.0 SITE CONDITIONS

Weather Condition:	clear
Temperature:	41-68
Precipitation:	none

2.0 HEALTH AND SAFETY

Issues:	Wet roads

3.0 GOLDER PERSONNEL ON SITE

Name	Time on Site
Shawn Casey	0630 To 1530
Steve Moeller	

4.0 SUMMARY OF ACTIVITIES

Location: Autoclave

No activity

Location: Area E

Continue cover soil north side area E. Performed 5 depth checks. Contractor having difficult time keeping the soil from sliding on slopes near wall west and NW side of site. Will likely need more rock in these areas to hold soil in place

Location: PCB Cells

Golder Associates Inc.
3730 Chamblee Tucker Road
Atlanta, GA 30341 USA
Tel: (770) 496-1893 Fax: (770) 934-9476 www.golder.com

Golder Associates: Operations in Africa, Asia, Australasia, Europe, North America and South America

Golder, Golder Associates and the GA globe design are trademarks of Golder Associates Corporation

Location: Area A

No activity

Location: CMT Borrow Area

Screen soil

Location: Area C&D

No activity

Location: Groundwater Extraction System

Purge IW 26 & 27. Wells pump dry after a couple of minutes but managed to get 54 gallon from IW26 and 57 for IW27

5.0 DISCUSSIONS / MEETINGS

Personnel Involved:	
Location:	
Topics Covered:	

6.0 CQA TESTING PERFORMED ON-SITE

Location:	Area E
Test:	Depth checks

7.0 COMMENTS / ISSUES / OTHER

None

8.0 EQUIPMENT ONSITE

JD tractor/disc, Volvo compactor smooth drum, 2 Komatsu 210 excavators, SAKAI compactor sheep's foot, JD excavator 270(removed 9/22/15), Komatsu dozer 39EX, Vermeer wood chipper(removed from site 9/8/15), Komatsu excavator 228, JD skid steer 329E, EXTEC soil screener, Komatsu dozer GPS equipped(delivered 9/9/15), Off-road (delivered 9/8/15). Loader delivered to Borrow pit 9/14/15. Grader onsite 10/14/15

9.0 PHOTOGRAPHS

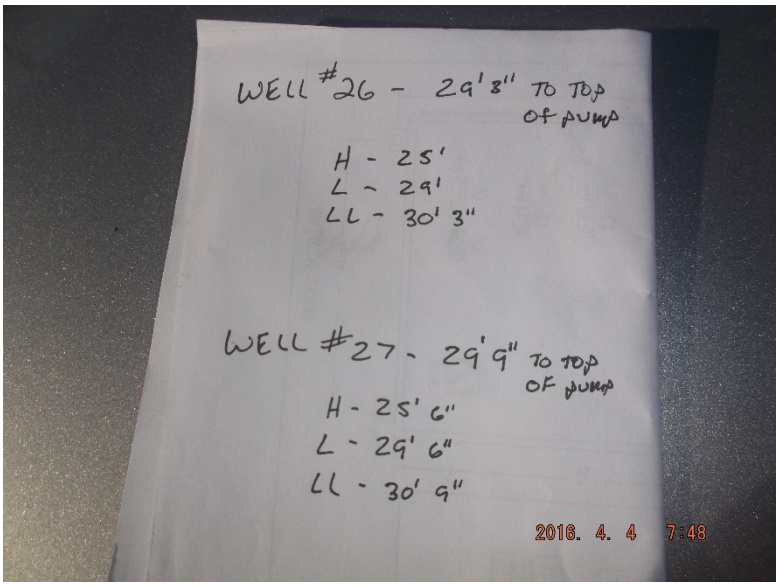

Sensor levels IW26&27



Purging wells IW 26 & 27



Continue cover soil placement area E

FIELD MONITORING REPORT

Project No.:	1302962.CQA	**Project Title:**	OU-3 RA Cover Systems
Location:	Anniston, AL		
Owner:	Solutia, Inc.		
Contractor:	Taylor Corp.		

Date: Tuesday, April 5, 2016

1.0 SITE CONDITIONS

Weather Condition:	clear
Temperature:	51-65
Precipitation:	none

2.0 HEALTH AND SAFETY

Issues:	accountability

3.0 GOLDER PERSONNEL ON SITE

Name	Time on Site
Shawn Casey	0630 To 1600
Steve Moeller	

4.0 SUMMARY OF ACTIVITIES

Location: Autoclave

No activity

Location: Area E

Placing topsoil north half of E and also stockpile topsoil. Begin the grade out 3ft road for cover soil south half of area

Perform depth checks north side of E for topsoil/cover soil depth

Location: PCB Cells

Golder Associates Inc.
3730 Chamblee Tucker Road
Atlanta, GA 30341 USA
Tel: (770) 496-1893 Fax: (770) 934-9476 www.golder.com

Golder Associates: Operations in Africa, Asia, Australasia, Europe, North America and South America

Golder, Golder Associates and the GA globe design are trademarks of Golder Associates Corporation

Location: Area A

No activity

Location: CMT Borrow Area

Screen soil

Location: Area C&D

No activity

Location: Groundwater Extraction System

Mike Smilley onsite with 4 Taylor men purging out carbon tanks for IW26 & 27

5.0 DISCUSSIONS / MEETINGS

Personnel Involved:	
Location:	
Topics Covered:	

6.0 CQA TESTING PERFORMED ON-SITE

Location:	Area E
Test:	Depth checks

7.0 COMMENTS / ISSUES / OTHER

None

8.0 EQUIPMENT ONSITE

JD tractor/disc, Volvo compactor smooth drum, 2 Komatsu 210 excavators, SAKAI compactor sheep's foot, JD excavator 270(removed 9/22/15), Komatsu dozer 39EX, Vermeer wood chipper(removed from site 9/8/15), Komatsu excavator 228, JD skid steer 329E, EXTEC soil screener, Komatsu dozer GPS equipped(delivered 9/9/15), Off-road (delivered 9/8/15). Loader delivered to Borrow pit 9/14/15. Grader onsite 10/14/15

9.0 PHOTOGRAPHS



Topsoil placement area E



West limits area E where soil wants to slide on slope



Stockpile topsoil area E

FIELD MONITORING REPORT

Project No.:	1302962.CQA	**Project Title:**	OU-3 RA Cover Systems
Location:	Anniston, AL		
Owner:	Solutia, Inc.		
Contractor:	Taylor Corp.		

Date: Wednesday, April 6, 2016

1.0 SITE CONDITIONS

Weather Condition:	cloudy
Temperature:	47-68
Precipitation:	none

2.0 HEALTH AND SAFETY

Issues:	Slope stability

3.0 GOLDER PERSONNEL ON SITE

Name	Time on Site
Shawn Casey	0630 To 1600
Steve Moeller	

4.0 SUMMARY OF ACTIVITIES

Location: Autoclave

No activity

Location: Area E

Continue to place cover soil south half of site then placed topsoil on the south. Contractor hauled in too much topsoil will need to push the topsoil to west wall and load out

Location: PCB Cells

Golder Associates Inc.
3730 Chamblee Tucker Road
Atlanta, GA 30341 USA
Tel: (770) 496-1893 Fax: (770) 934-9476 www.golder.com

Golder Associates: Operations in Africa, Asia, Australasia, Europe, North America and South America

Golder, Golder Associates and the GA globe design are trademarks of Golder Associates Corporation

Location: Area A

No activity

Location: CMT Borrow Area

No activity. Excavator been down for 2 days

Location: Area C&D

No activity

Location: Groundwater Extraction System

Mike Smiley onsite with 4 Taylor men purging out carbon tanks for IW26 & 27

5.0 DISCUSSIONS / MEETINGS

Personnel Involved:	
Location:	
Topics Covered:	

6.0 CQA TESTING PERFORMED ON-SITE

Location:	Area E
Test:	Depth checks protective cover south side area E

7.0 COMMENTS / ISSUES / OTHER

None

8.0 EQUIPMENT ONSITE

JD tractor/disc, Volvo compactor smooth drum, 2 Komatsu 210 excavators, SAKAI compactor sheep's foot, JD excavator 270(removed 9/22/15), Komatsu dozer 39EX, Vermeer wood chipper(removed from site 9/8/15), Komatsu excavator 228, JD skid steer 329E, EXTEC soil screener, Komatsu dozer GPS equipped(delivered 9/9/15), Off-road (delivered 9/8/15). Loader delivered to Borrow pit 9/14/15. Grader onsite 10/14/15

9.0 PHOTOGRAPHS



Placing protective cover south half of area E



Placing topsoil south half of area E

FIELD MONITORING REPORT

Project No.:	1302962.CQA	**Project Title:**	OU-3 RA Cover Systems
Location:	Anniston, AL		
Owner:	Solutia, Inc.		
Contractor:	Taylor Corp.		

Date: Thursday, April 7, 2016

1.0 SITE CONDITIONS

Weather Condition:	cloudy
Temperature:	48-65
Precipitation:	0.5in during the night

2.0 HEALTH AND SAFETY

Issues:	Slope stability

3.0 GOLDER PERSONNEL ON SITE

Name	Time on Site
Shawn Casey	0630 To 1630
Steve Moeller	

4.0 SUMMARY OF ACTIVITIES

Location: Autoclave

No activity

Location: Area E

Begin drain pipe/ 57 stone installation west limits.

Location: PCB Cells

Golder Associates Inc.
3730 Chamblee Tucker Road
Atlanta, GA 30341 USA
Tel: (770) 496-1893 Fax: (770) 934-9476 www.golder.com

Golder Associates: Operations in Africa, Asia, Australasia, Europe, North America and South America

Golder, Golder Associates and the GA globe design are trademarks of Golder Associates Corporation

Location: Area A

No activity

Location: CMT Borrow Area

No activity

Location: Area C&D

No activity

Location: Groundwater Extraction System

Finish up sampling of IW26 & 27

5.0 DISCUSSIONS / MEETINGS

Personnel Involved:	
Location:	
Topics Covered:	

6.0 CQA TESTING PERFORMED ON-SITE

Location:	Area E
Test:	Depth checks topsoil south section area E

7.0 COMMENTS / ISSUES / OTHER

None

8.0 EQUIPMENT ONSITE

JD tractor/disc, Volvo compactor smooth drum, 2 Komatsu 210 excavators, SAKAI compactor sheep's foot, JD excavator 270(removed 9/22/15), Komatsu dozer 39EX, Vermeer wood chipper(removed from site 9/8/15), Komatsu excavator 228, JD skid steer 329E, EXTEC soil screener, Komatsu dozer GPS equipped(delivered 9/9/15), Off-road (delivered 9/8/15). Loader delivered to Borrow pit 9/14/15. Grader onsite 10/14/15

9.0 PHOTOGRAPHS



T at drain pipe Area E



Installing 57 stone over drain pipe



NW corner area E



North limits area E

FIELD MONITORING REPORT

Project No.:	1302962.CQA	**Project Title:**	OU-3 RA Cover Systems
Location:	Anniston, AL		
Owner:	Solutia, Inc.		
Contractor:	Taylor Corp.		

Date: Friday, April 8, 2016

1.0 SITE CONDITIONS

Weather Condition:	cloudy
Temperature:	52-70
Precipitation:	none

2.0 HEALTH AND SAFETY

Issues:	Slope stability

3.0 GOLDER PERSONNEL ON SITE

Name	Time on Site
Shawn Casey	0630 To 1530
Steve Moeller	

4.0 SUMMARY OF ACTIVITIES

Location: Autoclave

No activity

Location: Area E

Finish installing drain pipe and rock except the area SW corner where wall needs to be poured. Loaded out 10 trucks of topsoil the was not needed and stockpiled it in the staging area NW corner of area A

Location: PCB Cells

Golder Associates Inc.
3730 Chamblee Tucker Road
Atlanta, GA 30341 USA
Tel: (770) 496-1893 Fax: (770) 934-9476 www.golder.com

Golder Associates: Operations in Africa, Asia, Australasia, Europe, North America and South America

Golder, Golder Associates and the GA globe design are trademarks of Golder Associates Corporation

Location: Area A

No activity

Location: CMT Borrow Area

No activity

Location: Area C&D

No activity

Location: Groundwater Extraction System

No activity

5.0 DISCUSSIONS / MEETINGS

Personnel Involved:	
Location:	
Topics Covered:	

6.0 CQA TESTING PERFORMED ON-SITE

Location:	
Test:	

7.0 COMMENTS / ISSUES / OTHER

None

8.0 EQUIPMENT ONSITE

JD tractor/disc, Volvo compactor smooth drum, 2 Komatsu 210 excavators, SAKAI compactor sheep's foot, JD excavator 270(removed 9/22/15), Komatsu dozer 39EX, Vermeer wood chipper(removed from site 9/8/15), Komatsu excavator 228, JD skid steer 329E, EXTEC soil screener, Komatsu dozer GPS equipped(delivered 9/9/15), Off-road (delivered 9/8/15). Loader delivered to Borrow pit 9/14/15. Grader onsite 10/14/15

9.0 PHOTOGRAPHS



Loading out extra topsoil



Rock/drain pipe install Area E



Same as above



Pipe/rock install area E

FIELD MONITORING REPORT

Project No.:	1302962.CQA	**Project Title:**	OU-3 RA Cover Systems
Location:	Anniston, AL		
Owner:	Solutia, Inc.		
Contractor:	Taylor Corp.		

Date: Monday, April 11, 2016

1.0 SITE CONDITIONS

Weather Condition:	cloudy
Temperature:	48-65
Precipitation:	Rain started mid-afternoon

2.0 HEALTH AND SAFETY

Issues:	Slope stability

3.0 GOLDER PERSONNEL ON SITE

Name	Time on Site
Shawn Casey	0530 To 1000
Steve Moeller	

4.0 SUMMARY OF ACTIVITIES

Location: Autoclave

No activity

Location: Area E

Built form for well pad

Location: PCB Cells

Golder Associates Inc.
3730 Chamblee Tucker Road
Atlanta, GA 30341 USA
Tel: (770) 496-1893 Fax: (770) 934-9476 www.golder.com

Golder Associates: Operations in Africa, Asia, Australasia, Europe, North America and South America

Golder, Golder Associates and the GA globe design are trademarks of Golder Associates Corporation

Location: Area A

Begin cover soil north side of area A

Location: CMT Borrow Area

Load trucks

Location: Area C&D

No activity

Location: Groundwater Extraction System

No activity

5.0 DISCUSSIONS / MEETINGS

Personnel Involved:	
Location:	
Topics Covered:	

6.0 CQA TESTING PERFORMED ON-SITE

Location:	
Test:	

7.0 COMMENTS / ISSUES / OTHER

None

8.0 EQUIPMENT ONSITE

JD tractor/disc, Volvo compactor smooth drum, 2 Komatsu 210 excavators, SAKAI compactor sheep's foot, JD excavator 270(removed 9/22/15), Komatsu dozer 39EX, Vermeer wood chipper(removed from site 9/8/15), Komatsu excavator 228, JD skid steer 329E, EXTEC soil screener, Komatsu dozer GPS equipped(delivered 9/9/15), Off-road (delivered 9/8/15). Loader delivered to Borrow pit 9/14/15. Grader onsite 10/14/15

9.0 PHOTOGRAPHS



Start cover soil area A



Same as above

FIELD MONITORING REPORT

Project No.:	1302962.CQA	**Project Title:**	OU-3 RA Cover Systems
Location:	Anniston, AL		
Owner:	Solutia, Inc.		
Contractor:	Taylor Corp.		

Date: Tuesday, April 12, 2016

1.0 SITE CONDITIONS

Weather Condition:	cloudy
Temperature:	61-72
Precipitation:	1.7in received last night

2.0 HEALTH AND SAFETY

Issues:	Safety training for Taylor crew all day

3.0 GOLDER PERSONNEL ON SITE

Name	Time on Site
Shawn Casey	0530 To
Steve Moeller	

4.0 SUMMARY OF ACTIVITIES

Location: Autoclave

No activity

Location: Area E

No activity

Location: PCB Cells

Golder Associates Inc.
3730 Chamblee Tucker Road
Atlanta, GA 30341 USA
Tel: (770) 496-1893 Fax: (770) 934-9476 www.golder.com

Golder Associates: Operations in Africa, Asia, Australasia, Europe, North America and South America

Golder, Golder Associates and the GA globe design are trademarks of Golder Associates Corporation

Location: Area A

No activity

Location: CMT Borrow Area

No activity

Location: Area C&D

No activity

Location: Groundwater Extraction System

No activity

5.0 DISCUSSIONS / MEETINGS

Personnel Involved:	
Location:	
Topics Covered:	

6.0 CQA TESTING PERFORMED ON-SITE

Location:	
Test:	

7.0 COMMENTS / ISSUES / OTHER

None

8.0 EQUIPMENT ONSITE

JD tractor/disc, Volvo compactor smooth drum, 2 Komatsu 210 excavators, SAKAI compactor sheep's foot, JD excavator 270(removed 9/22/15), Komatsu dozer 39EX, Vermeer wood chipper(removed from site 9/8/15), Komatsu excavator 228, JD skid steer 329E, EXTEC soil screener, Komatsu dozer GPS equipped(delivered 9/9/15), Off-road (delivered 9/8/15). Loader delivered to Borrow pit 9/14/15. Grader onsite 10/14/15

9.0 PHOTOGRAPHS



Cover soil placed Area A 4/11/16



Same as above



Topsoil placed along west limits area A



Install well vault and form for concrete 4/11/16

FIELD MONITORING REPORT

Project No.:	1302962.CQA	**Project Title:**	OU-3 RA Cover Systems
Location:	Anniston, AL		
Owner:	Solutia, Inc.		
Contractor:	Taylor Corp.		

Date: Wednesday, May 5, 2016

1.0 SITE CONDITIONS

Weather Condition:	clr
Temperature:	48-65
Precipitation:	

2.0 HEALTH AND SAFETY

Issues:	Hygene

3.0 GOLDER PERSONNEL ON SITE

Name	Time on Site
Shawn Casey	0800 To 1600
Steve Moeller	

4.0 SUMMARY OF ACTIVITIES

Location: Autoclave

No activity

Location: Area E

No activity

Location: PCB Cells

Golder Associates Inc.
3730 Chamblee Tucker Road
Atlanta, GA 30341 USA
Tel: (770) 496-1893 Fax: (770) 934-9476 www.golder.com

Golder Associates: Operations in Africa, Asia, Australasia, Europe, North America and South America

Golder, Golder Associates and the GA globe design are trademarks of Golder Associates Corporation

Location: Area A

Placing cover soil east side of site

Depth checks on cover soil SE corner working north

Location: CMT Borrow Area

No activity

Location: Area C&D

No activity

Location: Groundwater Extraction System

No activity

5.0 DISCUSSIONS / MEETINGS

Personnel Involved:	
Location:	
Topics Covered:	

6.0 CQA TESTING PERFORMED ON-SITE

Location:	
Test:	

7.0 COMMENTS / ISSUES / OTHER

None

8.0 EQUIPMENT ONSITE

JD tractor/disc, Volvo compactor smooth drum, 2 Komatsu 210 excavators, SAKAI compactor sheep's foot, JD excavator 270(removed 9/22/15), Komatsu dozer 39EX, Vermeer wood chipper(removed from site 9/8/15), Komatsu excavator 228, JD skid steer 329E, EXTEC soil screener, Komatsu dozer GPS equipped(delivered 9/9/15), Off-road (delivered 9/8/15). Loader delivered to Borrow pit 9/14/15. Grader onsite 10/14/15

9.0 PHOTOGRAPHS

FIELD MONITORING REPORT

Project No.:	1302962.CQA	**Project Title:**	OU-3 RA Cover Systems
Location:	Anniston, AL		
Owner:	Solutia, Inc.		
Contractor:	Taylor Corp.		

Date: Thursday, May 5, 2016

1.0 SITE CONDITIONS

Weather Condition:	PC
Temperature:	48-68
Precipitation:	0.2

2.0 HEALTH AND SAFETY

Issues:	PPE

3.0 GOLDER PERSONNEL ON SITE

Name	Time on Site
Shawn Casey	0630 To 1700
Steve Moeller	

4.0 SUMMARY OF ACTIVITIES

Location: Autoclave

No activity

Location: Area E

5 men for PF onsite to finish off SW corner with liner and composite. One panel completed and tested all liner/composite competed for area

Field tested destruct which failed. Liner just CAPPED the seam and took another destruct on the previous seam which passed

Location: PCB Cells

Golder Associates Inc.
3730 Chamblee Tucker Road
Atlanta, GA 30341 USA
Tel: (770) 496-1893 Fax: (770) 934-9476 www.golder.com

Golder Associates: Operations in Africa, Asia, Australasia, Europe, North America and South America

Golder, Golder Associates and the GA globe design are trademarks of Golder Associates Corporation

Location: **Area A**

Placing cover soil east side of site

Location: **CMT Borrow Area**

No activity

Location: **Area C&D**

No activity

Location: **Groundwater Extraction System**

No activity

5.0 DISCUSSIONS / MEETINGS

Personnel Involved:	
Location:	
Topics Covered:	

6.0 CQA TESTING PERFORMED ON-SITE

Location:	
Test:	

7.0 COMMENTS / ISSUES / OTHER

None

8.0 EQUIPMENT ONSITE

JD tractor/disc, Volvo compactor smooth drum, 2 Komatsu 210 excavators, SAKAI compactor sheep's foot, JD excavator 270(removed 9/22/15), Komatsu dozer 39EX, Vermeer wood chipper(removed from site 9/8/15), Komatsu excavator 228, JD skid steer 329E, EXTEC soil screener, Komatsu dozer GPS equipped(delivered 9/9/15), Off-road (delivered 9/8/15). Loader delivered to Borrow pit 9/14/15. Grader onsite 10/14/15

9.0 PHOTOGRAPHS

FIELD MONITORING REPORT

Project No.:	1302962.CQA	**Project Title:**	OU-3 RA Cover Systems
Location:	Anniston, AL		
Owner:	Solutia, Inc.		
Contractor:	Taylor Corp.		

Date: Friday, May 6, 2016

1.0 SITE CONDITIONS

Weather Condition:	PC
Temperature:	48-68
Precipitation:	

2.0 HEALTH AND SAFETY

Issues:	

3.0 GOLDER PERSONNEL ON SITE

Name	Time on Site
Shawn Casey	0630 To 1700
Steve Moeller	

4.0 SUMMARY OF ACTIVITIES

Location: Autoclave

No activity

Location: Area E

Placing cover soil/topsoil SW corner

Location: PCB Cells

Golder Associates Inc.
3730 Chamblee Tucker Road
Atlanta, GA 30341 USA
Tel: (770) 496-1893 Fax: (770) 934-9476 www.golder.com

Golder Associates: Operations in Africa, Asia, Australasia, Europe, North America and South America

Golder, Golder Associates and the GA globe design are trademarks of Golder Associates Corporation

Location: Area A

Started to push out topsoil east side of site.

Location: CMT Borrow Area

No activity

Location: Area C&D

No activity

Location: Groundwater Extraction System

No activity

5.0 DISCUSSIONS / MEETINGS

Personnel Involved:	
Location:	
Topics Covered:	

6.0 CQA TESTING PERFORMED ON-SITE

Location:	
Test:	

7.0 COMMENTS / ISSUES / OTHER

None

8.0 EQUIPMENT ONSITE

JD tractor/disc, Volvo compactor smooth drum, 2 Komatsu 210 excavators, SAKAI compactor sheep's foot, JD excavator 270(removed 9/22/15), Komatsu dozer 39EX, Vermeer wood chipper(removed from site 9/8/15), Komatsu excavator 228, JD skid steer 329E, EXTEC soil screener, Komatsu dozer GPS equipped(delivered 9/9/15), Off-road (delivered 9/8/15). Loader delivered to Borrow pit 9/14/15. Grader onsite 10/14/15

9.0 PHOTOGRAPHS

FIELD MONITORING REPORT

Project No.:	1302962.CQA	**Project Title:**	OU-3 RA Cover Systems
Location:	Anniston, AL		
Owner:	Solutia, Inc.		
Contractor:	Taylor Corp.		

Date: Saturday, May 6, 2016

1.0 SITE CONDITIONS

Weather Condition:	PC
Temperature:	52-75
Precipitation:	

2.0 HEALTH AND SAFETY

Issues:	

3.0 GOLDER PERSONNEL ON SITE

Name	Time on Site
Shawn Casey	0830 To 1500
Steve Moeller	

4.0 SUMMARY OF ACTIVITIES

Location: Autoclave

No activity

Location: Area E

Finish grading the topsoil and installing drain pipe/rock and textile 100ft section SW corner of Area E.

Area E is completed

Location: PCB Cells

Golder Associates Inc.
3730 Chamblee Tucker Road
Atlanta, GA 30341 USA
Tel: (770) 496-1893 Fax: (770) 934-9476 www.golder.com

Golder Associates: Operations in Africa, Asia, Australasia, Europe, North America and South America

Golder, Golder Associates and the GA globe design are trademarks of Golder Associates Corporation

Location: Area A

Placing cover soil NE corner of area A

Location: CMT Borrow Area

No activity

Location: Area C&D

No activity

Location: Groundwater Extraction System

No activity

5.0 DISCUSSIONS / MEETINGS

Personnel Involved:	
Location:	
Topics Covered:	

6.0 CQA TESTING PERFORMED ON-SITE

Location:	
Test:	

7.0 COMMENTS / ISSUES / OTHER

None

8.0 EQUIPMENT ONSITE

JD tractor/disc, Volvo compactor smooth drum, 2 Komatsu 210 excavators, SAKAI compactor sheep's foot, JD excavator 270(removed 9/22/15), Komatsu dozer 39EX, Vermeer wood chipper(removed from site 9/8/15), Komatsu excavator 228, JD skid steer 329E, EXTEC soil screener, Komatsu dozer GPS equipped(delivered 9/9/15), Off-road (delivered 9/8/15). Loader delivered to Borrow pit 9/14/15. Grader onsite 10/14/15

9.0 PHOTOGRAPHS

APPENDIX V3

Weekly Progress Meeting Reports

Weekly Update Meeting July 22, 2015

Project: OU-3 Remediation

Owner: Pharmacia LLC/ Solutia Inc.

Contractor: Taylor Corporation

Health and Safety

Safe hours worked through Saturday July 18 is 974 hours. Daily safety meetings are being held each morning for all Construction Employees on site.

BMPs are being inspected daily, and after each rain event that is over ¾ of an inch. We have a guard monitoring the construction entrance gate during construction hours. Employees sign in with the guard every morning and sign out when they leave the site. No tampering of gates or equipment has been noted.

Work completed week of July 13, 2015

- Completed installation of BMP's at the PCB Cells (678 LF of Type A Silt Fence, and 720 LF of Wattles were installed).
- Clearing and Grubbing was completed at the PCB Cells (A total of 27,649. SF has been cleared)
- Existing grades were verified by a Surveyor, and the limits of the PCB Cells were marked

Work in progress for the week of July 20, 2015

- Clearing and Grubbing began at the Borrow Site
- Access Road to the PCB Cells is being installed
- Herbicide was sprayed today at the PCB Cells
- Fence was removed on the Southwest corner of the PCB Cells, and 288' temporary fence has been installed

Work anticipated for the next two weeks

- Finish up Clearing at the Borrow Site
- Begin Stripping topsoil at the Borrow Site
- Begin Installing BMPs at Borrow Site

- Complete PCB Cells Access Road
- Disk and Roll the PCB Cells
- Areas that will require bridging in the PCB Cells will be identified

Opportunities

Final Pours and Methods Plan for the Autoclave will be submitted on Friday July 24, 2015 for review by Golder and Solutia.

Taylor Corporation Hours are 6:30 to 4:30 M-F. Weekend work is expected for this project, but no weekend work has taken place to date.

Weekly Update Meeting July 29, 2015

Project: OU-3 Remediation

Owner: Pharmacia LLC/ Solutia Inc.

Contractor: Taylor Corporation

Health and Safety

Safe hours worked through Saturday July 25 is 1205 hours. Daily safety meetings are being held each morning for all Construction Employees on site.

BMPs are being inspected daily, and after each rain event that is over ¾ of an inch. Temporary Fence at the PCB Cells is also being inspected daily. We have a guard monitoring the construction entrance gate during construction hours. Employees sign in with the guard every morning and sign out when they leave the site. No tampering of gates or equipment has been noted.

Work completed week of July 20, 2015

- Clearing and Grubbing at the PCB Cells was completed
- Herbicide was sprayed at the PCB Cells
- Access Haul road to the PCB Cells began
- Clearing at the Borrow Pit began
- Final Pours and Methods Plan for the Autoclave was submitted

Work in progress for the week of July 27, 2015

- Clearing and Grubbing at the Borrow Pit is on-going
- Access haul road to the PCB Cells will be complete
- Grass that is not dying in the PCB Cells will be re-sprayed with herbicide

Work anticipated for the next two weeks

- Begin Stripping topsoil at the Borrow Site
- Begin Installing BMPs at Borrow Site
- Begin installing sediment basin at the Borrow Site

- Disk and Roll the PCB Cells
- Areas that will require bridging in the PCB Cells will be identified

Opportunities

Autoclave Pour Plan has been submitted, and will be discussed

Taylor Corporation Hours are 6:30 to 4:30 M-F. Weekend work is expected for this project, but no weekend work has taken place to date.

Weekly Update Meeting August 5, 2015

Project: OU-3 Remediation

Owner: Pharmacia LLC/ Solutia Inc.

Contractor: Taylor Corporation

Health and Safety

Safe hours worked through Saturday July 25 is 1565 hours. Daily safety meetings are being held each morning for all Construction Employees on site.

BMPs are being inspected daily, and after each rain event that is over ¾ of an inch. Temporary Fence at the PCB Cells is also being inspected daily. We have a guard monitoring the construction entrance gate during construction hours. Employees sign in with the guard every morning and sign out when they leave the site. No tampering of gates or equipment has been noted.

Work completed week of July 27, 2015

- Clearing and Grubbing was on going in the borrow pit
- 24" CMP was installed on the PCB Access Road
- PCB Cells Access Road was complete
- Grass was re-sprayed with Herbicide

Work in progress for the week of July 27, 2015

- Clearing and Grubbing at the Borrow Pit will be complete
- Decon Pad at PCB Cells will be complete
- Decon Pad at Construction Gate will begin
- Will observe the PCB Cells to verify grass is ready to be disked and rolled
- Tractor and Disk will mobilize to site
- Erosion Control began at Borrow Site

Work anticipated for the next two weeks

- Continue Erosion Control in Borrow Pit
- Begin Stripping Topsoil at Borrow Pit

- Begin Sediment Basin in Borrow Pit
- Autoclave work will begin on August 17, 2015
- Disk and Roll PCB Cells
- Areas that will require bridging at PCB Cells will be identified

Opportunities

Taylor Corporation Hours are 6:30 to 4:30 M-F. Weekend work is expected for this project, and will take place during the Autoclave Work.

Weekly Update Meeting August 12, 2015

Project: OU-3 Remediation

Owner: Pharmacia LLC/ Solutia Inc.

Contractor: Taylor Corporation

Health and Safety

Safe hours worked through Saturday August 8, 2015 is 1805 hours. Daily safety meetings are being held each morning for all Construction Employees on site. Safety Topics at the daily safety meetings last week included the following:

8/3 Personal Hygiene

8/4 Equipment Safety

8/5 Environmental Hazards

8/6 Communication

8/7 Back to School Hazards

BMPs are being inspected daily, and after each rain event that is over ¾ of an inch. Temporary Fence at the PCB Cells is also being inspected daily. We have a guard monitoring the construction entrance gate during construction hours. Employees sign in with the guard every morning and sign out when they leave the site. No tampering of gates or equipment has been noted. However, last week two traffic signs were stolen, these signs are in the process of being replaced.

Work completed week of August 3, 2015

- Clearing and grubbing was on going in the Borrow Pit
- Decon Pad at the PCB Cells was complete
- Decon Pad at the Construction Access Gate was started
- Began installing Erosion Control at the Borrow Pit

Work in progress for the week of August 10, 2015

- Clearing and grubbing at the Borrow Pit will be complete
- Erosion control at the Borrow Pit will continue

- Begin stripping topsoil at Borrow Pit
- Begin Sediment Basin at Borrow Pit
- Complete Decon Pad at Construction Access Gate
- Begin Mobilizing for Autoclave Construction

Work anticipated for the next two weeks

- Disk and Roll PCB Cells
- Areas that will require bridging at PCB Cells will be identified
- Begin screening dirt for the PCB Cells
- Autoclave work will begin on August 17, 2015

Opportunities

Taylor Corporation Hours are 6:30 to 4:30 M-F. Weekend work is expected for this project, and will take place during the Autoclave Work.

Weekly Update Meeting August 19, 2015

Project: OU-3 Remediation

Owner: Pharmacia LLC/ Solutia Inc.

Contractor: Taylor Corporation

Health and Safety

Safe hours worked through Saturday August 15, 2015 is 2105 hours. Daily safety meetings are being held each morning for all Construction Employees on site. Safety Topics at the daily safety meetings last week included the following:

8/10 Jobsite Traffic

8/11 Site Acclimation

8/12 Equipment Safety

8/13 Jobsite Hazards

8/14 PCB Awareness

BMPs are being inspected daily, and after each rain event that is over ¾ of an inch. Temporary Fence at the PCB Cells is also being inspected daily. We have a guard monitoring the construction entrance gate during construction hours. Employees sign in with the guard every morning and sign out when they leave the site. No tampering of gates or equipment has been noted.

Work completed week of August 10, 2015

- Decon Pad at the Construction Access Gate was completed
- Continued Installing Erosion Control at Borrow Pit
- Began Stripping Topsoil at Autoclave
- Tub Grinder Mobilized to Begin Grinding Trees at Borrow Pit
- Began Mobilizing for work at Autoclave

Work in progress for the week of August 17, 2015

- Tree Grinding is ongoing at Borrow Pit
- Installing Erosion Control is ongoing at Borrow Pit

- Topsoil Stripping at Borrow Pit is ongoing
- Autoclave Excavation Complete
- Installing Dense Grade Base at Autoclave
- Begin Concrete Work at Autoclave

Work anticipated for the next two weeks

- Disk and Roll PCB Cells
- Areas that will require bridging at PCB Cells will be identified
- Autoclave work will be Complete
- Begin Excavation for wall at Area E
- Complete the sediment basin at Borrow Pit

Opportunities

Taylor Corporation Hours are 6:30 to 4:30 M-F. Weekend work is expected for this project, and will take place during the Autoclave Work.

Weekly Update Meeting August 26, 2015

Project: OU-3 Remediation

Owner: Pharmacia LLC/ Solutia Inc.

Contractor: Taylor Corporation

Health and Safety

Safe hours worked through Saturday August 22, 2015 is 3205 hours. Daily safety meetings are being held each morning for all Construction Employees on site. Safety Topics at the daily safety meetings last week included the following:

8/17 Weather/Site Access and Control

8/18 Site Spotters

8/19 Slips, Trips, and Falls

8/20 Caught Between

8/21 Lead By Example

BMPs are being inspected daily, and after each rain event that is over ¾ of an inch. There have been three rain events to date over ¾ of an inch, and the BMP's have held up through each of them. Temporary Fence at the PCB Cells is also being inspected daily. We have a guard monitoring the construction entrance gate during construction hours. Employees sign in with the guard every morning and sign out when they leave the site. No tampering of gates or equipment has been noted.

Work completed week of August 17, 2015

- Tree Grinding at Borrow Pit was halted due to equipment failure
- Erosion Control continued in Borrow Pit
- Topsoil Stripping was on going in Borrow Pit
- Autoclave Excavation was complete
- Dense Grade Base was complete in Autoclave
- Concrete Placement Began at Autoclave

Work in progress for the week of August 24, 2015

- Tree Grinding will begin back
- Installing Erosion Control is ongoing at Borrow Pit
- Topsoil Stripping at Borrow Pit is ongoing
- Concrete Work at Autoclave is ongoing and will be complete on Saturday
- PCB Cells will be Disked and Rolled
- Areas that will require bridging will be identified

Work anticipated for the next two weeks

- Begin Excavation for wall at Area E
- Begin screening dirt at Borrow Pit
- Begin Hauling Dirt to PCB Cells

Opportunities

Taylor Corporation Hours are 6:30 to 4:30 M-F. Weekend work is expected for this project, and will take place during the Autoclave Work.

Weekly Update Meeting September 2, 2015

Project: OU-3 Remediation

Owner: Pharmacia LLC/ Solutia Inc.

Contractor: Taylor Corporation

Health and Safety

Safe hours worked through Saturday August 29, 2015 is 4141 hours. Daily safety meetings are being held each morning for all Construction Employees on site. Safety Topics at the daily safety meetings last week included the following:

8/25 Backing in Trucks

8/26 Material Handling

8/27 The Different Levels of Protection

8/28 When to Use Hearing Protection

8/29 Splash Protection

BMPs are being inspected daily, and after each rain event that is over ¾ of an inch. There have been three rain events to date over ¾ of an inch, and the BMP's have held up through each of them. Temporary Fence at the PCB Cells is also being inspected daily. We have a guard monitoring the construction entrance gate during construction hours. Employees sign in with the guard every morning and sign out when they leave the site. No tampering of gates or equipment has been noted.

Work completed week of August 24, 2015

- Tree Grinding at Borrow Pit began again
- Erosion Control continued in Borrow Pit
- Topsoil Stripping was on going in Borrow Pit
- Autoclave Concrete Work was completed
- Joint Sealing in the Autoclave Area Began
- PCB Cells was disked and rolled
- Areas that will require bridging was identified
- Area E was sprayed with Herbacide

Work in progress for the week of August 31, 2015

- Tree Grinding is ongoing in Borrow Pit
- Installing Erosion Control is ongoing at Borrow Pit
- Sediment Pond Piping will be installed at Borrow Pit
- Screen will be mobilized at Borrow Pit
- Gutters will be installed at Autoclave

Work anticipated for the next two weeks

- Begin screening dirt at Borrow Pit
- Begin Hauling Dirt to PCB Cells
- Area E Wall will be prepped for concrete
- Begin Concrete Footer for Area E Wall

Opportunities

Taylor Corporation Hours are 6:30 to 4:30 M-F. Weekend work is expected for this project.

Weekly Update Meeting September 9, 2015

Project: OU-3 Remediation

Owner: Pharmacia LLC/ Solutia Inc.

Contractor: Taylor Corporation

Health and Safety

Safe hours worked through Saturday September 5, 2015 is 4414 hours. Daily safety meetings are being held each morning for all construction employees on site. Safety topics at the daily safety meetings last week included the following:

8/31 MSDS

9/1 Underground Utilities

9/2 Roadway Safety

9/3 Hearing Protection

9/4 Holiday Weekend Home Safety

BMPs are being inspected daily, and after each rain event that is over ¾ of an inch. There have been three rain events to date over ¾ of an inch, and the BMP's have held up through each of them. Temporary Fence at the PCB Cells is also being inspected daily. We have a guard monitoring the construction entrance gate during construction hours. Employees sign in with the guard every morning and sign out when they leave the site. No tampering of gates or equipment has been noted.

Work completed week of August 31, 2015

- Tree Grinding at Borrow Pit was completed
- Erosion Control continued in Borrow Pit
- Topsoil Stripping was ongoing in Borrow Pit
- Sediment Basin Structure and Pipe was installed
- Joint Sealing in the Autoclave Area was complete
- Gutters were installed in Autoclave Area

Work in progress for the week of September 7, 2015

- Installing Erosion Control is ongoing at Borrow Pit
- Haul Road will be installed to access Borrow Pit
- Screen is mobilized and material will begin being screened
- Screened Material will begin being placed at the PCB Cells
- Area E wall will be dug out for footer
- Dense Grade Base will be installed for the footer

Work anticipated for the next two weeks

- Screen Dirt for PCB Cells
- Haul Dirt to PCB Cells
- Area E Wall will be prepped for concrete
- Begin Concrete Footer for Area E Wall

Opportunities

Taylor Corporation Hours are 6:30 to 4:30 M-F. Weekend work is expected for this project.

Weekly Update Meeting September 16, 2015

Project: OU-3 Remediation

Owner: Pharmacia LLC/ Solutia Inc.

Contractor: Taylor Corporation

Health and Safety

Safe hours worked through Saturday September 12, 2015 is 4746 hours. Daily safety meetings are being held each morning for all construction employees on site. Safety topics at the daily safety meetings last week included the following:

9/7 No Work due to Labor Day Holiday

9/8 Mental Distractions and Inattention

9/9 Poor House Keeping

9/10 Machinery

9/11 Safety with Machine Guards: Basics and Proper Use

BMPs are being inspected daily, and after each rain event that is over ¾ of an inch. There have been three rain events to date over ¾ of an inch, and the BMP's have held up through each of them. Temporary Fence at the PCB Cells is also being inspected daily. We have a guard monitoring the construction entrance gate during construction hours. Employees sign in with the guard every morning and sign out when they leave the site. No tampering of gates or equipment has been noted. The chip pile located in the Borrow Area did catch fire either by spontaneous combustion or by arson. The fire began on Saturday September 5, 2015, but was not noticed by employees associated with the OU-3 work until returning to work after the Labor Day Holiday on Tuesday September 8, 2015. Local Fire Department responded on September 5th, 6th, and 7th, but they assumed that the fire was intentionally set. After being notified, Taylor Corporation provided overnight fire watch on September 8th and 9th. The fire was extinguished on September 10th. Nothing was damaged by the fire.

Work completed week of September 7, 2015

- Erosion Control continued in Borrow Pit
- Topsoil Stripping was ongoing in Borrow Pit
- Screen was mobilized at Borrow Pit
- Haul Road was installed to access Borrow Pit
- Screened Material began being hauled to PCB Cells
- Preparation began for Area E footer
- Dense Grade Base was installed for Area E Wall Footer

Work in progress for the week of September 14, 2015

- Screening dirt for PCB Cells
- Hauling screened dirt to PCB Cells
- 40 mil Geomembrane is being delivered
- Preparation for Concrete at Area E will be finished this week
- Footer and Wall for Area E wall will begin being formed and poured

Work anticipated for the next two weeks

- Screen Dirt for PCB Cells
- Haul Screened Dirt to PCB Cells
- Concrete for Area E Wall and Footer will continue being poured
- Begin work in Area A

Opportunities

Taylor Corporation Hours are 6:30 to 4:30 M-F. Weekend work is expected for this project.

Weekly Update Meeting September 23, 2015

Project: OU-3 Remediation

Owner: Pharmacia LLC/ Solutia Inc.

Contractor: Taylor Corporation

Health and Safety

Safe hours worked through Saturday September 19, 2015 is 5402 hours. Daily safety meetings are being held each morning for all construction employees on site. Safety topics at the daily safety meetings last week included the following:

9/14 Weather and Erosion and Sediment Control

9/15 Powerlines and Dust Control

9/16 Awareness of Surroundings

9/17 PPE

9/18 Poor Housekeeping

BMPs are being inspected daily, and after each rain event that is over ¾ of an inch. There have been three rain events to date over ¾ of an inch, and the BMP's have held up through each of them. Temporary Fence at the PCB Cells is also being inspected daily. We have a guard monitoring the construction entrance gate during construction hours. Employees sign in with the guard every morning and sign out when they leave the site. No tampering of gates or equipment has been noted.

Work completed week of September 14, 2015

- Erosion Control continued in Borrow Pit
- Topsoil Stripping was ongoing in Borrow Pit
- Screened Material began being hauled to PCB Cells
- Digging out for Area E footer was complete
- Dense Grade Base was complete for Area E Footer
- Form work for Area E Footer and Wall Began
- Weather Station at Area A was taken down

- 40 mil Geomembrane was delivered

Work in progress for the week of September 21, 2015

- Haul Screened Dirt to PCB Cells
- Continue Forming and Pouring Area E Wall
- Continue Preparing Area A for Concrete

Work anticipated for the next two weeks

- Screen Dirt for PCB Cells
- Haul Screened Dirt to PCB Cells
- Concrete for Area E Wall and Footer
- Continue Preparing Area A for concrete

Opportunities

Taylor Corporation Hours are 6:30 to 4:30 M-F. Weekend work is expected for this project.

Weekly Update Meeting September 30, 2015

Project: OU-3 Remediation

Owner: Pharmacia LLC/ Solutia Inc.

Contractor: Taylor Corporation

Health and Safety

Safe hours worked through Saturday September26, 2015 is 6215 hours inclusive of subcontractors. Daily safety meetings are being held each morning for all construction employees on site. Subcontractors are given tailgate safety meetings prior to starting work. Safety topics at the daily safety meetings last week included the following:

9/21 Basic Safety & Health Rules

9/22 Blood Borne Pathogens (BBP)

9/23 Construction, Safety Stand Down

9/24 Death, Workplace Related

9/25 Driving Safety

BMPs are being inspected daily, and after each rain event that is over ¾ of an inch. There have been three rain events to date over ¾ of an inch, and the BMP's have held up through each of them. Temporary Fence at the PCB Cells is also being inspected daily. We have a guard monitoring the construction entrance gate during construction hours. Employees sign in with the guard every morning and sign out when they leave the site. No tampering of gates or equipment has been noted.

On September 24, 2015, the concrete subcontractor ignited a small patch of grass in Area E while cutting rebar. The fire was quickly extinguished, and they were instructed to use a fire cloth and keep their fire extinguisher next to the work area.

Work completed week of September 21, 2015

- Erosion Control continued in Borrow Pit
- Topsoil Stripping was ongoing in Borrow Pit
- Screened Material was hauled to PCB Cells
- Form work for Area E Footer and Wall was On-Going
- Conduit in Area E was lowered where it interfered with footer
- Preparation for Area A slab on grade began
- Temporary Fence was installed in Area A
- Chain link Fabric was removed from southern portion of Area A Fence

Work in progress for the week of September 28, 2015

- Haul Screened Dirt to PCB Cells
- Erosion Control in Borrow Pit will be complete
- Continue Forming and Pouring Area E Wall
- Continue Preparing Area A for Concrete
- Begin Forming Area A for Concrete

Work anticipated for the next two weeks

- Haul Screened Dirt to PCB Cells
- Bridge areas at the PCB Cells
- Complete final elevations, compaction and moisture testing of subgrade at the PCB Cells
- Concrete for Area E Wall and Footer
- Continue Preparing Area A for concrete
- Begin Pouring Area A Concrete Slab
- Re-Install Fence along Southside of Area A
- Remove next section of Chain Link Fabric in Area A

Opportunities

Taylor Corporation Hours are 6:30 to 4:30 M-F. Weekend work is expected to make up for rain delays.

Weekly Update Meeting October 7, 2015

Project: OU-3 Remediation

Owner: Pharmacia LLC/ Solutia Inc.

Contractor: Taylor Corporation

Health and Safety

Safe hours worked through Saturday October 3, 2015 is 6750 hours. Daily safety meetings are being held each morning for all construction employees on site. Safety topics at the daily safety meetings last week included the following:

9/28 Truck Traffic

9/29 Dust Control

9/30 Construction Safety

10/1 Erosion Control

10/2 Trench Safety

BMPs are being inspected daily, and after each rain event that is over ¾ of an inch. There have been five rain events to date over ¾ of an inch, and the BMP's have held up through each of them. Temporary Fence at the PCB Cells is also being inspected daily. We have a guard monitoring the construction entrance gate during construction hours. Employees sign in with the guard every morning and sign out when they leave the site. No tampering of gates or equipment has been noted. There was one other incident reported, the sparks generated from our subcontractor cutting rebar started a small fire on the dead grass in Area E. The fire was extinguished before any damage was caused to any person, property, or equipment.

Work completed week of September 28, 2015

- Erosion Control was finished in Borrow Pit
- Topsoil Stripping was ongoing in Borrow Pit
- Screened Material was hauled to PCB Cells
- Form work for Area E Footer and Wall was On-Going

- Guy Wire and Grounding Rod was raised in Area E to allow room for dirt fill
- Guy Wire was removed in Area A, and Grounding Rod was raised to allow room for concrete cover system
- Preparation for Area A slab on grade began

Work in progress for the week of October 5, 2015

- Finishing up first layer of 6" screened material in PCB Cells
- Will be pouring the first section of Concrete Footer in Area E
- Continue Preparing Area A for Concrete
- Begin Forming Area A for Concrete

Work anticipated for the next two weeks

- Screen and Stockpile Dirt for PCB Cells
- Liner Subcontractor will Mobilized and begin work in PCB Cells
- Continue Forming and Pouring Area E Wall
- Continue Preparing Area A for concrete
- Begin Pouring Area A Concrete Slab
- Extensions for PIV's and Fire Hydrant will be installed in Area A
- Re-Install Fence along Southside of Area A
- Remove next section of Chain Link Fence in Area A

Opportunities

Taylor Corporation Hours are 6:30 to 4:30 M-F. Weekend work is expected for this project.

Weekly Update Meeting October 14, 2015

Project: OU-3 Remediation

Owner: Pharmacia LLC/ Solutia Inc.

Contractor: Taylor Corporation

Health and Safety

Safe hours worked through Saturday October 10, 2015 is 7840 hours. Daily safety meetings are being held each morning for all construction employees on site. Safety topics at the daily safety meetings last week included the following:

10/5 Hot Work

10/6 Slips and Falls

10/7 Overhead Line and Utilities

10/8 Spotter Communication

10/9 Good Housekeeping

BMPs are being inspected daily, and after each rain event that is over ¾ of an inch. There have been six rain events to date over ¾ of an inch, and the BMP's had to be repaired after the last rain event in a several locations. Temporary Fence at the PCB Cells is also being inspected daily. We have a guard monitoring the construction entrance gate during construction hours. Employees sign in with the guard every morning and sign out when they leave the site. No tampering of gates or equipment has been noted.

Work completed week of October 5, 2015

- Screened Material was hauled to PCB Cells
- Topsoil Stripping and stock piling was ongoing in Borrow Pit
- Screened Material was hauled to PCB Cells
- First Pour of Eastern and Northern side of Area E footer was poured
- Forming and Pouring of Area A Slab on Grade began

Work in progress for the week of October 12, 2015

- Finishing up first layer of 6" screened material in PCB Cells, which was not able to be complete over the weekend due to rain events
- Liner will begin being placed in PCB Cells
- Forming and tying steel in Eastern and Northern Wall Pour in Area E
- Preparation for Valve Extensions in Area A
- Knuckled Fence will be installed along the southern section of Area A
- Next 200' of Poles will be driven for future Area A Fence
- Pouring of Area A Concrete Slab will Continue

Work anticipated for the next two weeks

- Screen and Stockpile Dirt for PCB Cells
- Liner Subcontractor will be installing liner at the PCB Cells
- Concrete for Area E Wall and Footer
- Continue Preparing Area A for concrete
- Extensions for PIV's and Fire Hydrant will be installed in Area A
- Continue Pouring Area A Slab on Grade
- Herbicide Area A to prepare for fill

Opportunities

Taylor Corporation Hours are 6:30 to 4:30 M-F. Weekend work is expected for this project.

Weekly Update Meeting October 21, 2015

Project: OU-3 Remediation

Owner: Pharmacia LLC/ Solutia Inc.

Contractor: Taylor Corporation

Health and Safety

Safe hours worked through Saturday October 17, 2015 is 8802 hours. Daily safety meetings are being held each morning for all construction employees on site. Safety topics at the daily safety meetings last week included the following:

10/12 Fire Extinguisher Inspection

10/13 Hydration in Cold Weather

10/14 Housekeeping and Equipment

10/15 Daily Inspections of Equipment

10/16 Slips and Falls

BMPs are being inspected daily, and after each rain event that is over ¾ of an inch. There have been six rain events to date over ¾ of an inch, and the BMP's had to be repaired after the last rain event in a several locations. Temporary Fence at the PCB Cells is also being inspected daily. We have a guard monitoring the construction entrance gate during construction hours. Employees sign in with the guard every morning and sign out when they leave the site. No tampering of gates or equipment has been noted.

Work completed week of October 12, 2015

- First 6" Layer of Screened Material was complete at PCB Cells
- Installation of Liner Began at PCB Cells
- There was a new Gate installed to access the PCB Cells from the South East Corner
- Topsoil Stripping at Borrow Pit was complete
- Steel Tying and Formwork was conducted for Eastern Section of Area E Wall

- First South to North Section of Area A Slab on Grade was complete
- Fence was reinstalled on southern section of Area A
- Fence Post were installed for the next 200' of fence in Area A
- Temporary Fence was relayed for next Section of Area A Slab on Grade
- Herbicide was sprayed in Area A below Slab on Grade Area

Work in progress for the week of October 19, 2015

- Liner will be placed at the PCB Cells
- Material will be screened and stock piled at the Borrow Pit
- Eastern and Northern Wall of Area E will be poured
- Western side of Area E Footer will begin being formed
- Next Section of Area A will be prepped for Slab on Grade

Work anticipated for the next two weeks

- Screen and Stockpile Dirt for PCB Cells
- Liner Subcontractor will continue installing liner and geocomposite at the PCB Cells
- Concrete for West side of Area E Footer
- Continue Preparing Area A for concrete
- Continue Pouring Area A Concrete Slab on Grade
- Fence will be installed in Area A as we finish Concrete Slab on Grade

Opportunities

Taylor Corporation Hours are 6:30 to 4:30 M-F. Weekend work is expected for this project.

Weekly Update Meeting October 28, 2015

Project: OU-3 Remediation

Owner: Pharmacia LLC/ Solutia Inc.

Contractor: Taylor Corporation

Health and Safety

Safe hours worked through Saturday October 24, 2015 is 10,502 hours. Daily safety meetings are being held each morning for all construction employees on site. Safety topics at the daily safety meetings last week included the following:

10/19 Slips and Falls

10/20 Equipment Maintenance

10/21 Personal Hygiene

10/22 Proper Permitting

10/23 Housekeeping on the Jobsite

BMPs are being inspected daily, and after each rain event that is over ¾ of an inch. There have been six rain events to date over ¾ of an inch, and the BMP's had to be repaired after the last rain event in a several locations. Temporary Fence at the PCB Cells is also being inspected daily. We have a guard monitoring the construction entrance gate during construction hours. Employees sign in with the guard every morning and sign out when they leave the site. No tampering of gates or equipment has been noted.

Work completed week of October 19, 2015

- Liner at the PCB Cells was completed
- The destructs in the liner were surveyed by Turner Surveying
- Installation of Geocomposite began at PCB Cells
- Material was screened and stockpiled at the Borrow Pit
- Northern, Southern, and Eastern Walls of Area E Wall was poured
- Area A will continue being prepped for Area A Slab on Grade

- Formwork and tying of steel continued in Area A for the Slab on Grade
- Fence Post were driven along the southern and northern limits of Area A for future fence

Work in progress for the week of October 26, 2015

- Geocomposite will be placed and sowed at the PCB Cells
- Material will be screened and stock piled at the Borrow Pit
- Forms from Northern, Eastern, and Southern Area E Wall will be wrecked
- Next Section of Area A Slab on Grade will be poured
- Fence around the old weather station was removed in Area A
- Due to Rain, Randy's Crew will begin hauling and placing Dense Grade Base in Area C&D
- Tyler's crew will begin raising PIV's and Hydrant in Area A

Work anticipated for the next two weeks

- Screen and Stockpile Dirt for PCB Cells
- Liner Subcontractor will be finished at the PCB Cells
- Soil Cover Layer will begin being hauled to cover the PCB Cells
- Formwork for West side of Area E Footer
- Continue Preparing Area A for concrete
- Continue Pouring Area A Concrete Slab on Grade
- Fence will be installed in Area A as we finish Concrete Slab on Grade
- Herbicide will be sprayed in Area A

Opportunities

Taylor Corporation Hours are 6:30 to 4:30 M-F. Weekend work is expected for this project.

Weekly Update Meeting November 4, 2015

Project: OU-3 Remediation

Owner: Pharmacia LLC/ Solutia Inc.

Contractor: Taylor Corporation

Health and Safety

Safe hours worked through Saturday October 31, 2015 is 11,308 hours. Daily safety meetings are being held each morning for all construction employees on site. Safety topics at the daily safety meetings last week included the following:

10/26 Lockout Tag Out

10/27 Fire Extinguisher Familiarization

10/28 Confined Space

10/29 Adapting to New Environments and Task

10/30 Halloween Safety (watching for children on the roads)

BMPs are being inspected daily, and after each rain event that is over ¾ of an inch. There have been eight rain events to date over ¾ of an inch, and the BMP's held up through each of the two rain events in the last week. Temporary Fence at the PCB Cells is also being inspected daily. We have a guard monitoring the construction entrance gate during construction hours. Employees sign in with the guard every morning and sign out when they leave the site. No tampering of gates or equipment has been noted.

Work completed week of October 26, 2015

- Installation of Geocomposite Continued at PCB Cells
- Material was screened and stockpiled at the Borrow Pit
- Northern, Southern, and Eastern Walls of Area E Wall was stripped
- Western Footer began being formed
- Area A continued being prepped for Area A Slab on Grade
- Formwork and tying of steel continued in Area A for the Slab on Grade

- Area A Slab on Grade continued being poured
- PIV and Hydrants began being raised in Area A
- Fence around the old weather station in Area A was removed
- Area A was sprayed with Herbicide
- Due to Rain, blended stone layer for Area C&D began being hauled and placed
- Installed Silt Fence at Area C & D

Work in progress for the week of November 2, 2015

- Sowing of the Geocomposite at the PCB Cells was finished
- Material will be screened and stock piled at the Borrow Pit
- Soil Cover Layer will begin being placed over the Geocomposite as soon as it dries out enough to haul dirt
- Due to rain, Tyler Hollis's Crew began clearing for perimeter fence
- Blended Stone Layer at Area C&D was finished being placed and blended
- Turner is surveying the blended layer of Area C&D
- The next 6" layer of DGB will begin being placed in Area C&D
- Next Section of Area A Slab on Grade will be poured
- Tyler's crew will finish raising PIV's and Hydrant in Area A
- Western Wall in Area E is held up at the moment, due to design change of the wall. (New Control Building will require engineered fill that was unaccounted for in the original wall design)
- Sign in Area E is being raised
- Valve Vault in Area E is being Raised

Work anticipated for the next two weeks

- Screen and Stockpile Dirt for PCB Cells
- Soil Cover Layer will begin being hauled to cover the PCB Cells
- Formwork for West side of Area E Footer
- Continue Preparing Area A for concrete
- Continue Pouring Area A Concrete Slab on Grade

- Fence will be installed in Area A as we finish Concrete Slab on Grade
- Continue Hauling and Placing DGB to Area C&D

Opportunities

Taylor Corporation Hours are 6:30 to 4:30 M-F. Weekend work is expected for this project.

Weekly Update Meeting November 11, 2015

Project: OU-3 Remediation

Owner: Pharmacia LLC/ Solutia Inc.

Contractor: Taylor Corporation

Health and Safety

Safe hours worked through Saturday November 8, 2015 is 12,904 hours. Daily safety meetings are being held each morning for all construction employees on site. Safety topics at the daily safety meetings last week included the following:

11/2 Power Tool Inspection

11/3 The 12 Fatal Job Site Mistakes

11/4 Work Truck Safety Inspections

11/5 Proper BMP Installation and Maintenance

11/6 Inclement Weather

BMPs are being inspected daily, and after each rain event that is over ¾ of an inch. There have been eight rain events to date over ¾ of an inch, and the BMP's held up through each of the two rain events in the last week. Temporary Fence at the PCB Cells and at Area A are being inspected daily. We have a guard monitoring the construction entrance gate during construction hours. Employees sign in with the guard every morning and sign out when they leave the site. No tampering of gates or equipment has been noted.

Work completed week of November 2, 2015

- Sowing of Geocomposite at the PCB Cells was finished
- Material was screened and stockpiled at the Borrow Pit while weather permitted
- Due to Rain Tyler Hollis's Crew began clearing for perimeter fence
- Preparation for Area A Slab on Grade was complete
- Formwork and tying of steel continued in Area A for the Slab on Grade

- Area A Slab on Grade continued being poured
- PIV and Hydrants were completed being raised in Area A
- Blended Layer of Stone in Area C&D was completed
- Survey was conducted on the blended layer at Area C&D
- 6” Layer of DGB was Installed on Areas C&D
- Valve Vault in Area E was raised

Work in progress for the week of November 9, 2015

- Material will be screened and stock piled at the Borrow Pit
- Soil Cover Layer will begin being placed over the Geocomposite at the PCB Cells
- The Geocells began being installed in Area C & D
- Next Section of Area A Slab on Grade will be poured
- Form Work for Western Footer in Area E will resume
- Foundation for Sign in Area E will be poured

Work anticipated for the next two weeks

- Screen and Stockpile Dirt for PCB Cells
- Soil Cover Layer will be hauled to cover the PCB Cells
- Formwork for West side of Area E Footer and Wall
- Light Poles will be raised in Area E
- Area A Slab on Grade will be complete
- Fence will be installed in Area A as we finish Concrete Slab on Grade
- Continue Installing Geocells in Area C & D
- Continue Filling Geocells with DGB in Area C&D

Opportunities

Taylor Corporation Hours are 6:30 to 4:30 M-F. Weekend work is expected for this project.

Weekly Update Meeting November 18, 2015

Project: OU-3 Remediation

Owner: Pharmacia LLC/ Solutia Inc.

Contractor: Taylor Corporation

Health and Safety

Safe hours worked through Saturday November 14, 2015 is 13,704 hours. Daily safety meetings are being held each morning for all construction employees on site. Safety topics at the daily safety meetings last week included the following:

11/9 BMP Inspection

11/10 Wet Roads/Slips and Falls while Working on Geocells

11/11 Fog Low Visibility/Slips and Falls while on Working on Geocells

11/12 Muscle Strain and Sprains

11/13 Hydration and Personal Health

BMPs are being inspected daily, and after each rain event that is over ¾ of an inch. There have been nine rain events to date over ¾ of an inch. We had a very large rain last weekend that had a cumulative total of over 3.68", There was a breach in the BMP's in Borrow Area, and the Northeast Corner of the PCB Cells, They were repaired Monday morning. There was also a wash out in the DGB in Area C&D, it was repaired on Monday as well. Temporary Fence at the PCB Cells and at Area A are being inspected daily. We have a guard monitoring the construction entrance gate during construction hours. Employees sign in with the guard every morning and sign out when they leave the site. No tampering of gates or equipment has been noted.

Work completed week of November 9, 2015

- Material was screened and stockpiled at the Borrow Pit as weather permitted
- Began Hauling the Soil Cover Layer to the PCB Cells
- Area A Slab on Grade was complete

- Installed Gate Post on Northwest Section of Area A
- 6” Layer of DGB was complete in Area C & D
- Geocells began being installed in Area C & D
- Geocells began being filled with DGB in Area C&D

Work in progress for the week of November 16, 2015

- Material will be screened and stockpiled at the Borrow Pit weather permitting
- Soil Cover Layer will continue being placed over the Geocomposite at the PCB Cells
- The Geocells will continue being installed
- The Geocells will continue being filled with DGB
- Form Work for Western Footer in Area E will resume
- Will Pour the next section of the Western Footer
- Foundation for Sign in Area E will be poured

Work anticipated for the next two weeks

- Screen and Stockpile Dirt for PCB Cells
- Soil Cover Layer will be hauled to cover the PCB Cells
- Formwork for West side of Area E Footer and Wall
- Light Poles will be raised in Area E
- Fence will be installed in Area A
- East-West Run of Existing Fence will be removed in Area A
- Fence will be installed in the field north of Area A
- Continue Installing Geocells in Area C & D
- Continue Filling Geocells with DGB in Area C&D

Opportunities

Taylor Corporation Hours are 6:30 to 4:30 M-F. Weekend work is expected for this project.

Weekly Update Meeting December 2, 2015

Project: OU-3 Remediation

Owner: Pharmacia LLC/ Solutia Inc.

Contractor: Taylor Corporation

Health and Safety

Safe hours worked through Saturday November 28, 2015 is 14,931 hours. Daily safety meetings are being held each morning for all construction employees on site. Safety topics at the daily safety meetings in the last two weeks included the following:

11/16 BMP Inspection

11/17 Safety Sheets/ Slips and Falls

11/18 Equipment Inspection

11/19 Safety Stand Down

11/20 Good House Keeping

11/23 Complacently

11/24 Maintenance and Service

11/25 Holiday Safety

11/26 Thanksgiving Holidays

11/27 Thanksgiving Holidays

BMPs are being inspected daily, and after each rain event that is over ¾ of an inch. There have been ten rain events to date over ¾ of an inch. The BMP's held up through last week's rain event. Temporary Fence at the PCB Cells and at Area A are being inspected daily. We have a guard monitoring the construction entrance gate during construction hours. Employees sign in with the guard every morning and sign out when they leave the site. No tampering of gates or equipment has been noted. Due to Thanksgiving Holiday's this is a two week Update.

Work completed weeks of November 16 & November 23

- Material was screened and stockpiled at the Borrow Pit as weather permitted
- Began Hauling the Soil Cover Layer to the PCB Cells
- Geocells were installed in Area C & D
- Geocells continued being filled with DGB in Area C&D
- Area E Sign foundation was poured
- Area E Light Pole Bases were Poured
- West Side footer for Area E Wall was Poured

Work in progress for the week of November 30, 2015

- Material will be screened and stockpiled at the Borrow Pit as weather permits
- Soil Cover Layer will continue being placed over the Geocomposite at the PCB Cells
- The Geocells will continue being installed
- The Geocells will continue being filled with DGB
- Area E Wall will resume
- Fence is being installed in Area A
- Perimeter Fence will finish being cleared
- Perimeter Fence will be staked out

Work anticipated for the next two weeks

- Screen and Stockpile Dirt for PCB Cells
- Soil Cover Layer will be hauled to cover the PCB Cells
- Form and Pour West side of Area E Footer and Wall
- Fence will be complete in Area A
- Fence will begin in the field North of Area A
- Continue Installing Geocells in Area C & D
- Continue Filling Geocells with DGB in Area C&D

Opportunities

Taylor Corporation Hours are 6:30 to 4:30 M-F. Weekend work is expected for this project. Week of November 23, 2015 concluded on Wednesday November 25 in observation of Thanksgiving Holidays.

Weekly Update Meeting December 9, 2015

Project: OU-3 Remediation

Owner: Pharmacia LLC/ Solutia Inc.

Contractor: Taylor Corporation

Health and Safety

Safe hours worked through Saturday December 5, 2015 is 15,890 hours. Daily safety meetings are being held each morning for all construction employees on site. Safety topics at the daily safety meetings this week include the following:

11/30 Equipment Check Sheets

12/1 Complacency

12/2 Proper PPE

12/3 Task Safety Evaluations

12/4 Heed, Hear, and Understand

BMPs are being inspected daily, and after each rain event that is over ¾ of an inch. There have been eleven rain events to date over ¾ of an inch. The BMP's held up through last week's rain event. Temporary Fence at the PCB Cells is being inspected daily. Temporary Fence in Area A was removed, because permanent fence was installed. We have a guard monitoring the construction entrance gate during construction hours. Employees sign in with the guard every morning and sign out when they leave the site. No tampering of gates or equipment has been noted.

Work completed weeks of November 30

- Material was screened and stockpiled at the Borrow Pit as weather permitted
- Hauled the Soil Cover Layer to the PCB Cells
- Geocells were installed in Area C & D
- Geocells continued being filled with DGB in Area C&D

- Fence was installed in Area A
- Temporary Fence was removed from Area A
- Perimeter Fence was finished being cleared
- Perimeter Fence was staked out

Work in progress for the week of December 7, 2015

- Material will be screened and stockpiled at the Borrow Pit as weather permits
- Soil Cover Layer will continue being placed over the Geocomposite at the PCB Cells
- Topsoil will be placed on top of the Soil Cover Layer in the Southwest corner
- The Geocells will be finished, with the exception of approximately 11,000 SF. Those Cells will be complete once the additional Geocells are delivered.
- The Geocells that are installed will be filled with DGB
- Next Section of Area E wall will be poured
- Fence North of Area A will begin

Work anticipated for the next two weeks

- Screen and Stockpile Dirt for PCB Cells
- Soil Cover Layer will be complete at the PCB Cells
- Topsoil will be ongoing at the PCB Cells
- Form and Pour West side of Area E Footer and Wall
- Fence will be complete in the field North of Area A
- Perimeter Fence will begin on Southside of Highway 202

Opportunities

Taylor Corporation Hours are 6:30 to 4:30 M-F. Weekend work is expected for this project.

Weekly Update Meeting December 16, 2015

Project: OU-3 Remediation

Owner: Pharmacia LLC/ Solutia Inc.

Contractor: Taylor Corporation

Health and Safety

Safe hours worked through Saturday December 12, 2015 is 16,580 hours. Daily safety meetings are being held each morning for all construction employees on site. Safety topics at the daily safety meetings this week include the following:

12/7 Awkward Postures

12/8 Electrical Hazards

12/9 Driving Safety

12/10 Competent Person

12/11 Chemical Hazard Communication

BMPs are being inspected daily, and after each rain event that is over ¾ of an inch. There have been twelve rain events to date over ¾ of an inch. Temporary Fence at the PCB Cells is being inspected daily. We have a guard monitoring the construction entrance gate during construction hours. Employees sign in with the guard every morning and sign out when they leave the site. No tampering of gates or equipment has been noted.

Work completed weeks of December 7

- Material was screened and stockpiled at the Borrow Pit as weather permitted
- Hauled the Soil Cover Layer to the PCB Cells
- Hauled and Stockpiled Topsoil at the PCB Cells
- Geocells were completed at Area C&D with the exception of 9,306 SF which we had to order from manufacturer
- Fence began being installed in the field north of Area A

- Next 120’ section of wall was poured in Area E
- Excavated for the remainder of Area E Footer.

Work in progress for the week of December 14, 2015

- Material will be screened and stockpiled at the Borrow Pit as weather permits
- Soil Cover Layer will continue being placed over the Geocomposite at the PCB Cells
- Topsoil will be placed on top of the Soil Cover Layer as it is complete
- The remainder of the Geocells will arrive
- The rip rap perimeter began being installed at Area C&D
- Area E Wall forms will be wrecked
- Next section of Area E Footer will be formed
- Fence North of Area A will be finished
- Gate in Area A will be installed

Work anticipated for the next two weeks

- Screen and Stockpile Dirt for PCB Cells
- Soil Cover Layer will continue at the PCB Cells
- Topsoil will be ongoing at the PCB Cells
- Form and Pour West side of Area E Footer and Wall
- Perimeter Fence will begin on Southside of Highway 202
- Taylor Corporation will take off after December 22 in observation of Christmas Holidays and will resume on January 4.

Opportunities

Taylor Corporation Hours are 6:30 to 4:30 M-F. Weekend work is expected for this project.

Weekly Update Meeting December 22, 2015

Project: OU-3 Remediation

Owner: Pharmacia LLC/ Solutia Inc.

Contractor: Taylor Corporation

Health and Safety

Safe hours worked through Saturday December 19, 2015 is 17,128 hours. Daily safety meetings are being held each morning for all construction employees on site. Safety topics at the daily safety meetings this week include the following:

12/14 Equipment Maintenance

12/15 Top Five Safety Features on a Vehicle

12/16 Slips and Falls

12/17 Top 10 Reasons for Injuries on the Job Site

12/18 Personal Hygeine

BMPs are being inspected daily, and after each rain event that is over ¾ of an inch. There have been eleven rain events to date over ¾ of an inch. Temporary Fence at the PCB Cells is being inspected daily. We have a guard monitoring the construction entrance gate during construction hours. Employees sign in with the guard every morning and sign out when they leave the site. No tampering of gates or equipment has been noted.

Work completed weeks of December 14

- Material was screened and stockpiled at the Borrow Pit as weather permitted
- Hauled the Soil Cover Layer to the PCB Cells as weather permitted
- Rip Rap Perimeter Barrier at Area C&D began being installed
- Fence in the field north of Area A was installed
- Northern Gate at Area A was installed
- Southern Light Pole in Area E was transferred to new pole base

Work in progress for the week of December 21, 2015

- Material will be screened and stockpiled at the Borrow Pit as weather permits
- Soil Cover Layer will continue being placed over the Geocomposite at the PCB Cells
- Topsoil will be placed on top of the Soil Cover Layer as it is complete
- The remainder of the Geocells will be installed at Area C&D
- The rip rap perimeter will be complete at Area C&D
- Fence North of Area A will be finished
- Northern Light Pole in Area E will be transferred to new Pole Base

Work anticipated for the next two weeks upon return

- Once Construction activities resume we will concentrate on completing cover of the PCB Cells, and preparing to haul to Area A

Opportunities

- Taylor Corporation will take off after December 22 in observation of Christmas Holidays and will resume on January 4
- BMP's and temporary fencing will continue to be inspected during the Christmas Holiday Shutdown

Weekly Update Meeting January 13, 2016

Project: OU-3 Remediation

Owner: Pharmacia LLC/ Solutia Inc.

Contractor: Taylor Corporation

Health and Safety

Safe hours worked through Saturday January 9, 2016 is 18,427 hours. Daily safety meetings are being held each morning for all construction employees on site. Safety topics at the daily safety meetings this week include the following:

1/4 Equipment Check Sheets

1/5 Complacency

1/6 Proper PPE

1/7 Task Safety Evaluations

1/8 Heed, Hear, and Understand

BMPs are being inspected daily, and after each rain event that is over ¾ of an inch. There have been sixteen rain events to date over ¾ of an inch. There were five significant rain events while on Christmas Holiday Vacation. After each rain event, Deon Dupree of Taylor Corporation came in to inspect the BMP's and made any repairs necessary. Temporary Fence at the PCB Cells is being inspected daily. We have a guard monitoring the construction entrance gate during construction hours. Employees sign in with the guard every morning and sign out when they leave the site. No tampering of gates or equipment has been noted.

Work completed week of January 4, 2016

- Returned to Work from Christmas Holidays on Monday January 4, 2016
- Sediment Pond had to be mucked out from recent rain events
- Material was screened and stockpiled at the Borrow Pit as weather permitted.

- Hauled the Soil Cover Layer to the PCB Cells.
- Hauled and Stockpiled Topsoil at the PCB Cells.
- Grades were verified in the south portion of the PCB Cells, so that it can be grassed.
- Next 120' section of Area E wall footer was formed.
- Last of the DGB was installed into the Geocells
- Decon Pad near Temporary Guard Shack was Removed
- Grading took place around perimeter of Area C&D to enhance drainage

Work in progress for the week of January 11, 2016

- Material will be screened and stockpiled at the Borrow Pit as weather permits
- Soil Cover Layer will continue being placed over the Geocomposite at the PCB Cells
- Topsoil will be placed on top of the Soil Cover Layer as it is complete
- The rip rap perimeter began being installed at PCB Cells
- South Half of the PCB Cells will be Hydroseeded
- Next Section of Area E Footer was Formed and Poured
- Slab on Grade in Northeast corner outside of Area E Wall was Formed and Poured
- Perimeter Fence will Begin

Work anticipated for the next two weeks

- Finish Soil Cover Layer at PCB Cells
- Finish Topsoil at PCB Cells
- Install Maintenance Road at PCB Cells
- Install Rip Rap perimeter at PCB Cells
- Finish Hydroseeding at PCB Cells
- Form and Pour next 120' Section of Wall in Area E
- Form and Pour Slab on Grade in Northwest Corner outside of Area E Wall

- East to West Run of Existing Fence in Area A will be taken down.
- Guy wires in Area A will be raised to accommodate 2’ Fill
- Vaults in Area A will be raised to accommodate 2’ Fill
- Perimeter Fence will continue on Southside of Highway 202

Opportunities

Taylor Corporation Hours are 6:30 to 4:30 M-F. Weekend work is expected for this project.

Weekly Update Meeting January 20, 2016

Project: OU-3 Remediation

Owner: Pharmacia LLC/ Solutia Inc.

Contractor: Taylor Corporation

Health and Safety

Safe hours worked through Saturday January 16, 2016 is 19,138 hours. Daily safety meetings are being held each morning for all construction employees on site. Safety topics at the daily safety meetings this week include the following:

1/11 Overhead Hazards

1/12 Site Construction Traffic

1/13 Hazard Communication

1/14 Electrical Hazards

1/15 Crane Operations and Taglines

BMPs are being inspected daily, and after each rain event that is over ¾ of an inch. There have been seventeen rain events to date over ¾ of an inch. Temporary Fence at the PCB Cells is being inspected daily. The permanent Perimeter Fence will begin this week. Once it is complete the temporary fence at the PCB Cells will be removed. We have a guard monitoring the construction entrance gate during construction hours. Employees sign in with the guard every morning and sign out when they leave the site. No tampering of gates or equipment has been noted.

Work completed week of January 11, 2016

- Hauled the Soil Cover Layer to the PCB Cells.
- Hauled and Stockpiled Topsoil at the PCB Cells.
- Rip Rap was installed along the Southern Limits of the PCB Cells
- The Southern Half of the PCB Cells was Hydroseeded
- Next 120’ section of Area E wall footer was poured.

- Slab on Grade in Northeast corner of Area E outside of the wall was poured
- East to West Run of Existing Fence in Area A was taken down.

Work in progress for the week of January 18, 2016

- Material will be screened and stockpiled at the Borrow Pit as weather permits
- Soil Cover Layer will continue being placed over the Geocomposite at the PCB Cells
- Topsoil will be placed on top of the Soil Cover Layer as it is complete
- Bollards around Pump Station in the Northwest Corner of Area E were installed
- Next 120' section of wall is being formed
- Perimeter Fence is being installed South of Alabama Highway 202

Work anticipated for the next two weeks

- Finish Soil Cover Layer at PCB Cells
- Finish Topsoil at PCB Cells
- Install Maintenance Road at PCB Cells
- Install Rip Rap perimeter at PCB Cells
- Finish Hydroseeding at PCB Cells
- Form and Pour Slab on Grade in Northwest Corner outside of Area E Wall
- Guy wires in Area A will be raised to accommodate 2' Fill
- Retaining walls will be installed around the vaults in Area A to accommodate 2' Fill
- Perimeter Fence will be complete on Southside of Highway 202

Opportunities

Taylor Corporation Hours are 6:30 to 4:30 M-F. Weekend work is expected for this project.

Weekly Update Meeting January 27, 2016

Project: OU-3 Remediation

Owner: Pharmacia LLC/ Solutia Inc.

Contractor: Taylor Corporation

Health and Safety

Safe hours worked through Saturday January 23, 2016 is 19,628 hours. Daily safety meetings are being held each morning for all construction employees on site. Safety topics at the daily safety meetings this week include the following:

1/18 Safety Awareness/Hyperthermia

1/19 Top 10 Workplace Related Injuries

1/20 Driver Awareness/Complacency

1/21 Fall Prevention

1/22 Workplace Violence/Driving Conditions

BMPs are being inspected daily, and after each rain event that is over ¾ of an inch. There have been eighteen rain events to date through Saturday January 23 over ¾ of an inch. Temporary Fence at the PCB Cells is being inspected daily. The permanent Perimeter Fence began last week. Once it is complete the temporary fence at the PCB Cells will be removed. We have a guard monitoring the construction entrance gate during construction hours. Employees sign in with the guard every morning and sign out when they leave the site. No tampering of gates or equipment has been noted.

Work completed week of January 18, 2016

- Hauled the Soil Cover Layer to the PCB Cells.
- Hauled and Stockpiled Topsoil at the PCB Cells.
- Formed next 120’ section of Area E Wall (Pushed pour back to Monday 1-25-2016 due to freezing temperatures)
- Bollards were installed in Northwest Corner of Area E

- Perimeter fence began on south side of Alabama Highway 202
- Finished Ditch around area C&D and the added rip rap ditch down the south eastern embankment

Work in progress for the week of January 25, 2016

- Had a specialist come out and look at the screen, and to make repairs while weather is inclement
- Soil Cover Layer will continue being placed over the Geocomposite at the PCB Cells
- Topsoil will be placed on top of the Soil Cover Layer as it is complete
- Filter Ring in Area C&D was complete, which completes Area C&D
- Slab on grade in Northwest Corner of Area E around Pump Station will be complete
- Next section of Area E Footer will be formed
- Footers for extending Area A Vaults will be Prepped for Concrete
- Perimeter Fence is being installed South of Alabama Highway 202

Work anticipated for the next two weeks

- Continue to Screen and Stockpile material
- Finish Soil Cover Layer at PCB Cells
- Finish Topsoil at PCB Cells
- Install Maintenance Road at PCB Cells
- Install Rip Rap perimeter at PCB Cells
- Finish Hydroseeding at PCB Cells
- Perimeter Fence will be complete on Southside of Highway 202
- Disk Area A to prepare for Soil Cover

Opportunities

Taylor Corporation Hours are 6:30 to 4:30 M-F. Weekend work is expected for this project.

Weekly Update Meeting February 3, 2016

Project: OU-3 Remediation

Owner: Pharmacia LLC/ Solutia Inc.

Contractor: Taylor Corporation

Health and Safety

Safe hours worked through Saturday January 30, 2016 was 20,450 hours. Daily safety meetings are being held each morning for all construction employees on site. Safety topics at the daily safety meetings this week include the following:

1/25 Situational Awareness

1/26 Tailgate Safety on Each Specific Job

1/27 Hazardous Awareness/Proper PPE

1/28 Tools Safety/Proper Use

1/29 Slips and Fall Prevention

BMPs are being inspected daily, and after each rain event that is over ¾ of an inch. There have been eighteen rain events to date through Saturday January 30 over ¾ of an inch. Temporary Fence at the PCB Cells is being inspected daily. Approximately 1800 LF of the permanent Perimeter Fence is installed on the Southside of Alabama Highway 202. Once it is complete the temporary fence at the PCB Cells will be removed. We have a guard monitoring the construction entrance gate during construction hours. Employees sign in with the guard every morning and sign out when they leave the site. No tampering of gates or equipment has been noted.

Work completed week of January 25, 2016

- Had a Specialist come and inspect the Shaker Screen, and he is going to provide an itemized list for repairs
- Rented a Shaker Screen while Repairs were made to Taylor Corp's Screen
- Hauled the Soil Cover Layer to the PCB Cells.

- Hauled and Stockpiled Topsoil at the PCB Cells.
- Perimeter fence continued on the Southside of Alabama Highway 202.
- Poured the next 120’ section of wall in Area E.
- Filter Ring was installed in Area C&D.
- Footers for Retaining Walls around the two eastern most Vaults in Area A were prepared for Concrete.
- Formwork for Retaining Walls around the two eastern most Vaults in Area A began.
- Area A was disked and rolled in.
- Removed north-south run of fence along the northwest side of Area A.
- Removed Speed Bump North of Area A, to prepare to haul soil to Area A.
- BMP’s were installed in Area A.

Work in progress for the week of February 1, 2016

- Screening and stockpiling material in Borrow Pit
- Soil Cover Layer is ongoing in the PCB Cells
- Topsoil is being placed on top of the Soil Cover Layer as it is complete
- Slab on grade in Northwest Corner of Area E around Pump Station is complete
- Footers for Area A Retaining wall around two most eastern Vaults were poured
- Walls around Vaults in Area A will be installed
- Perimeter Fence on the Southside of Alabama Highway 202 is ongoing

Work anticipated for the next two weeks

- Continue to Screen and Stockpile material
- Finish Soil Cover Layer at PCB Cells
- Finish Topsoil at PCB Cells
- Install Maintenance Road at PCB Cells
- Install Rip Rap perimeter at PCB Cells

- Finish Hydroseeding at PCB Cells
- Vaults in Area A will be complete
- Begin Hauling 6” soil cover material to Area A
- Form and Pour next 60’ of Wall in Area E
- Perimeter Fence will be Complete

Opportunities

Taylor Corporation Hours are 6:30 to 4:30 M-F. Weekend work is expected for this project.

Weekly Update Meeting February 10, 2016

Project: OU-3 Remediation

Owner: Pharmacia LLC/ Solutia Inc.

Contractor: Taylor Corporation

Health and Safety

Safe hours worked through Saturday February 6, 2016 were 21,013 hours. Daily safety meetings are being held each morning for all construction employees on site. Safety topics at the daily safety meetings this week include the following:

2/1 Overhead Hazards

2/2 Most Dangerous Tools

2/3 Site Construction Traffic

2/4 Equipment Maintenance

2/5 Slips and Falls

BMPs are being inspected daily, and after each rain event exceeding ¾ of an inch. There have been nineteen rain events to date through Saturday, February 6 over ¾ of an inch. Temporary Fence at the PCB Cells is being inspected daily. Before last week's rain event we had a crew inspect the BMP's, and ensure that they were in good shape prior to the rain. However, there was a blow out in the BMPs in Area A; the blow out was repaired first thing Wednesday morning. We have a guard monitoring the construction entrance gate during construction hours. Employees sign in with the guard every morning and sign out when they leave the site.

Work completed week of February 1, 2016

- Hauled the Soil Cover Layer to the PCB Cells.
- Hauled and Stockpiled Topsoil at the PCB Cells.
- Repaired Taylor Corporation's screen

- Continued perimeter fence on the Southside of Alabama Highway 202.
- Poured Concrete Footers for Retaining Walls around the two eastern most Vaults in Area A
- Began formwork for Retaining Walls around the two eastern most Vaults in Area A
- Poured slab in Northwest corner of Area E

Work in progress for the week of February 8, 2016

- Screening and stockpiling material in Borrow Pit
- Soil Cover Layer is finished at the PCB cells
- Topsoil is being placed on top of the Soil Cover Layer as it is completed
- Rip Rap Perimeter is ongoing at the PCB Cells
- Laser Scan Area A so that a model can be built for the 6" soil layer
- Walls for Area A Retaining wall around two most eastern Vaults were postponed due to temperatures, but will be poured on Thursday
- Next 75' of footer in Area E will be poured
- Perimeter Fence on the Southside of Alabama Highway 202 is ongoing

Work anticipated for the next two weeks

- Continue to Screen and Stockpile material
- Finish Topsoil at PCB Cells
- Finish Rip Rap perimeter at PCB Cells
- Finish Hydroseeding at PCB Cells
- Complete Vaults in Area A
- Begin Hauling 6" soil cover material to Area A
- Form and Pour next 75' of Wall in Area E
- Complete Perimeter Fence

Opportunities

Taylor Corporation Hours are 6:30 to 4:30 M-F. Weekend work is expected for this project.

Weekly Update Meeting February 16, 2016

Project: OU-3 Remediation

Owner: Pharmacia LLC/ Solutia Inc.

Contractor: Taylor Corporation

Health and Safety

Safe hours worked through Saturday February 13, 2016 were 21,829 hours. Daily safety meetings are being held each morning for all construction employees on site. Safety topics at the daily safety meetings this week include the following:

2/8 Lock Out/Tag Out

2/9 Speed Control

2/10 Cold Injury/Truck Traffic

2/11 Safety Checks

2/12 Shore Up for Rain Events

BMPs are being inspected daily, and after each rain event exceeding ¾ of an inch. There have been nineteen rain events to date through Saturday, February 13 over ¾ of an inch. Temporary Fence at the PCB Cells is being inspected daily. Wattles were added in Area A, because it is a safety hazard to install silt fence on the slopes of the ditch along Clydesdale Ave. We have a guard monitoring the construction entrance gate during construction hours. Employees sign in with the guard every morning and sign out when they leave the site.

Work completed week of February 8, 2016

- Screened and Stockpiled Material at the Borrow Pit
- Soil Cover Layer was finished at the PCB Cells
- Topsoil was finished at the PCB Cells
- Worked on Rip Rap Armor Shield at the PCB Cells
- Poured Concrete Walls for Retaining Walls around the two eastern most Vaults in Area A.

- Laser Scanned Area A, so that a GPS Model can be built for the 6” soil layer beneath the liner.
- Poured footer for the next 75’ section of Area E, we are leaving a 60’ section of wall out for access to haul material into the Area E.
- Continued perimeter fence on the Southside of Alabama Highway 202.

Work in progress for the week of February 15, 2016

- Screening and stockpiling material in Borrow Pit
- Rip Rap Perimeter will be finished at the PCB Cells
- Forms for Walls for Area A Retaining wall around two most eastern Vaults will be wrecked
- Next 75’ of wall in Area E will be poured
- Digging out for concrete cover and wall around western most vault in Area A.
- Begin forming wall for western most vault in Area A.
- Perimeter Fence on the Southside of Alabama Highway 202 is ongoing

Work anticipated for the next two weeks

- Continue to Screen and Stockpile material
- Finish Hydroseeding at PCB Cells
- Complete Vaults in Area A
- Begin Hauling 6” soil cover material to Area A
- Complete Perimeter Fence

Opportunities

Taylor Corporation Hours are 6:30 to 4:30 M-F. Weekend work is expected for this project.

Weekly Update Meeting February 24, 2016

Project: OU-3 Remediation

Owner: Pharmacia LLC/ Solutia Inc.

Contractor: Taylor Corporation

Health and Safety

Safe hours worked through Saturday February 20, 2016 were 22,547 hours. Daily safety meetings are being held each morning for all construction employees on site. Safety topics at the daily safety meetings this week include the following:

2/15 Rain/Excavation in Plant

2/16 Accident Release/Spill Control

2/17 Decontamination Procedure

2/18 Permitting

2/19 Rigging and Lifting

BMPs are being inspected daily, and after each rain event exceeding ¾ of an inch. There have been twenty rain events to date through Saturday, February 20 over ¾ of an inch. Temporary Fence at the PCB Cells is being inspected daily. Permanent Perimeter Fence will be complete this week. We have a guard monitoring the construction entrance gate during construction hours. Employees sign in with the guard every morning and sign out when they leave the site.

Work completed week of February 15, 2016

- Screened and Stockpiled Material at the Borrow Pit
- Finished Rip Rap Armor Shield at the PCB Cells with the exception of the northeast corner until a plan could be made on the seep
- Began Installing the Maintenance Road at the PCB Cells.
- Poured wall for the next 75’ section of Area E, we are leaving a 40’ section of wall out for access to haul material into the Area E.

- Continued perimeter fence on the Southside of Alabama Highway 202.
- Graded for Slab and Wall around western most Vault in Area A.
- Began Forming for wall around western vault in Area A.

Work in progress for the week of February 22, 2016

- Screening and stockpiling material in Borrow Pit weather permitting.
- Finish maintenance road at the PCB Cells weather permitting.
- Grass and Mulch north half of PCB Cells weather permitting.
- Finish forming and pour concrete wall at the Western Most Vault in Area A.
- Sheep Foot Roll Area A weather permitting.
- Wreck Wall Forms in Area E.
- Perimeter Fence on the Southside of Alabama Highway 202 will be complete.

Work anticipated for the next two weeks

- Continue to Screen and Stockpile material
- Area A Vault Modifications will be complete
- Begin Hauling 6” soil cover material to Area A

Opportunities

Taylor Corporation Hours are 6:30 to 4:30 M-F. Weekend work is expected for this project.

Weekly Update Meeting March 2, 2016

Project: OU-3 Remediation

Owner: Pharmacia LLC/ Solutia Inc.

Contractor: Taylor Corporation

Health and Safety

Safe hours worked through Saturday February 27, 2016 were 22,847 hours. Daily safety meetings are being held each morning for all construction employees on site. Safety topics at the daily safety meetings this week include the following:

2/22 New Permit Process

2/23 Inclement Weather

2/24 Hazard Communication (MSDS)

2/25 3 Points of Contact

2/26 Surroundings/Foot Traffic

BMPs are being inspected daily, and after each rain event exceeding ¾ of an inch. There have been twenty-three rain events to date through Saturday, February 27 over ¾ of an inch. Temporary Fence at the PCB Cells was removed last week as the permanent fence was complete. We now have no temporary fence on the job. We have a guard monitoring the construction entrance gate during construction hours. The guard will be moved down to the gate north of Area A while we are hauling to Area A. Employees sign in with the guard every morning and sign out when they leave the site.

Work completed week of February 22, 2016

- Screened and Stockpiled Material at the Borrow Pit
- Finished Maintenance Road at the PCB Cells
- Finished Dressing Up Topsoil at PCB Cells in Preparation for Hydroseeding

- Wrecked wall forms for the next 75’ section of Area E (we are leaving a 40’ section of wall out for access to haul material into the Area E.)
- Finished perimeter fence on the Southside of Alabama Highway 202.
- Raised Fiber Pedestal in Area A
- Made wall footer pour for wall around western most vault in Area A.

Work in progress for the week of February 29, 2016

- Screening and stockpiling material in Borrow Pit.
- Grass and Mulch north half of PCB Cells.
- Removed Fiber Pedestal in Area E.
- Repaired Sinkhole in Area A.
- Finish tilling up Area A with skid-steer tiller in the areas that were too small for John Deere Tractor and Disk.
- Begin hauling 6”soil layer to Area A.
- Finish forming and pouring concrete wall at the Western Most Vault in Area A.
- Pour Slab on Grade at Western most vault in Area A.

Work anticipated for the next two weeks

- Continue to Screen and Stockpile material
- Area A Vault Modifications will be complete
- Finish Hauling 6” Soil Cover to Area A
- Plastic Fusion to mobilize to install liner on Area A.
- Begin Hauling 6” Soil Cover to Area E

Opportunities

Taylor Corporation Hours are 6:30 to 4:30 M-F. Weekend work is expected for this project.

Weekly Update Meeting March 9, 2016

Project: OU-3 Remediation

Owner: Pharmacia LLC/ Solutia Inc.

Contractor: Taylor Corporation

Health and Safety

Safe hours worked through Saturday March 5, 2016 were 23,387 hours. Daily safety meetings are being held each morning for all construction employees on site. Safety topics at the daily safety meetings this week include the following:

2/29 Crossing Highway

3/1 Traffic Route

3/2 Overhead/Underground Utilities

3/3 Dust Control

3/4 Flood Preparedness

BMPs are being inspected daily, and after each rain event exceeding ¾ of an inch. There have been twenty-four rain events to date through Saturday March, 5th that were over ¾ of an inch. We have a guard monitoring the construction entrance gate during construction hours. The guard will be moved down to the gate north of Area A while we are hauling to Area A. Employees sign in with the guard every morning and sign out when they leave the site.

Work completed week of February 29, 2016

- Screened and Stockpiled Material at the Borrow Pit
- Finished grassing and mulching north side of PCB Cells
- Removed Pedestal in Area E
- Repaired sinkhole in Area A
- Finish tilling up Area A with skid-steer tiller in the areas that were too small for John Deere Tractor and Disk.
- Began hauling 6” Soil layer to Area A

- Finished wall for western most vault in Area A
- Formed Slab on Grade for western most vault in Area A
- Met with Landscape Architect for Area H.

Work in progress for the week of March 7, 2016

- Screening and stockpiling material in Borrow Pit.
- Hauling 6”soil layer to Area A.
- Finish pouring slab on grade for western Area A Vault

Work anticipated for the next two weeks

- Continue to Screen and Stockpile material
- Finish Hauling 6” Soil Cover to Area A
- Plastic Fusion to mobilize to install liner on Area A.
- Begin Hauling 6” Soil Cover to Area E

Opportunities

Taylor Corporation Hours are 6:30 to 4:30 M-F. Weekend work is expected for this project.

Weekly Update Meeting March 16, 2016

Project: OU-3 Remediation

Owner: Pharmacia LLC/ Solutia Inc.

Contractor: Taylor Corporation

Health and Safety

Safe hours worked through Saturday March 12, 2016 were 24,221 hours. Daily safety meetings are being held each morning for all construction employees on site. Safety topics at the daily safety meetings this week include the following:

3/7 Behavioral Safety

3/8 Hazard Awareness

3/9 Dust Control

3/10 Safety Stand Down

3/11 Tarping Trucks

BMPs are being inspected daily, and after each rain event exceeding ¾ of an inch. There have been twenty-four rain events to date through Saturday March, 12th that were over ¾ of an inch. We now have no temporary fence on the job. We have a guard monitoring the construction entrance gate during construction hours. The guard will be moved down to the gate north of Area A while we are hauling to Area A. Employees sign in with the guard every morning and sign out when they leave the site.

Work completed week of March 7, 2016

- Screened and Stockpiled Material at the Borrow Pit
- Finished hauling 6" Soil layer to Area A
- Finished Pouring Slab on Grade for Area A Vault
- Began Prepping Area E for 6" Soil Cover Layer

Work in progress for the week of March 14, 2016

- Screening and stockpiling material in Borrow Pit.

- Plastic Fusion mobilized to begin liner in Area A
- Disk and Rolled Area E
- Began hauling 6”soil layer to Area E
- Finished hauling 6” soil layer to Area E.

Work anticipated for the next two weeks

- Continue to Screen and Stockpile material.
- Siberton Fence will mobilize to finish ditch crossings and replace fencing south of the PCB cells.
- Plastic Fusion to install liner on Area A.
- Plastic Fusion will begin installing liner on Area E.

Opportunities

Taylor Corporation Hours are 6:30 to 4:30 M-F. Weekend work is expected for this project.

Weekly Update Meeting March 23, 2016

Project: OU-3 Remediation

Owner: Pharmacia LLC/ Solutia Inc.

Contractor: Taylor Corporation

Health and Safety

Safe hours worked through Saturday March 19, 2016 were 25,131 hours. Daily safety meetings are being held each morning for all construction employees on site. Safety topics at the daily safety meetings this week include the following:

3/14 Hot Work

3/15 Loading and Unloading Equipment

3/16 Security

3/17 Don't Be in a Hurry

3/18 Overhead Lines

BMPs are being inspected daily, and after each rain event exceeding ¾ of an inch. There have been twenty-four rain events to date through Saturday March, 19th that were over ¾ of an inch. We have a guard monitoring the construction entrance gate during construction hours. The guard will be moved down to the gate north of Area A while we are hauling to Area A. Employees sign in with the guard every morning and sign out when they leave the site.

Work completed week of March 14, 2016

- Screened and Stockpiled Material at the Borrow Pit
- Plastic Fusion began Installing Liner in Area A
- Disked and Rolled Area E
- Began and completed Hauling 6" Soil layer to Area E

Work in progress for the week of March 21, 2016

- Screening and stockpiling material in Borrow Pit.
- Plastic Fusion finished liner in Area A.

- Plastic Fusion to begin liner in Area E.
- Siberton Fence is onsite to complete fence work.

Work anticipated for the next two weeks

- Continue to Screen and Stockpile material.
- Plastic Fusion to finish liner in Area E.
- Plastic Fusion to install geocomposite layer in Area E.
- Begin installing 12” soil cover layer in Area E.
- Plastic Fusion to install geocomposite layer in Area A.

Opportunities

Taylor Corporation Hours are 6:30 to 4:30 M-F. Weekend work is expected for this project.

Weekly Update Meeting March 30, 2016

Project: OU-3 Remediation

Owner: Pharmacia LLC/ Solutia Inc.

Contractor: Taylor Corporation

Health and Safety

Safe hours worked through Saturday March 26, 2016 were 26,126 hours. Daily safety meetings are being held each morning for all construction employees on site. Safety topics at the daily safety meetings this week include the following:

3/21 Fatigue

3/22 Situational Awareness

3/23 Plant Traffic

3/24 Power Tools and Equipment

3/25 Emergency Preparedness

BMPs are being inspected daily, and after each rain event exceeding ¾ of an inch. There have been twenty-four rain events to date through Saturday March, 26th that were over ¾ of an inch. Siberton is going to cut in a new 16' gate in the fence north of Area A, we installed temporary fence until Siberton can complete the gate. We have a guard monitoring the construction entrance gate during construction hours. The guard will be moved down to the gate north of Area A while we are hauling to Area A. Employees sign in with the guard every morning and sign out when they leave the site.

Work completed week of March 21, 2016

- Screened and Stockpiled Material at the Borrow Pit
- Plastic Fusion finished installing geomembrane in Area A
- Plastic Fusion began installing geomembrane in Area E
- Siberton Completed fence around the PCB Cells

Work in progress for the week of March 28, 2016

- Screening and stockpiling material in Borrow Pit.
- Plastic Fusion completed geomembrane in Area E.
- Plastic Fusion finished geocomposite in Area E.
- Plastic Fusion began geocomposite in Area A.
- Installed Directional Bores into Area A.
- Begin to haul 12” soil cover to Area E.

Work anticipated for the next two weeks

- Continue to Screen and Stockpile material.
- Plastic Fusion to finish geocomposite in Area A.
- Finish installing 12” soil cover layer in Area E.
- Begin installing topsoil in Area E.
- Install drainage pipe in Area E.
- Finish Area E Footer and Wall.

Opportunities

Taylor Corporation Hours are 6:30 to 4:30 M-F. Weekend work is expected for this project.

Weekly Update Meeting April 6, 2016

Project: OU-3 Remediation

Owner: Pharmacia LLC/ Solutia Inc.

Contractor: Taylor Corporation

Health and Safety

Safe hours worked through Saturday April 2, 2016 were 26,981hours. Daily safety meetings are being held each morning for all construction employees on site. Safety topics at the daily safety meetings this week include the following:

3/28 Slips and Falls

3/29 PCB Awareness and PPE

3/30 Plant Truck Traffic

3/31 Team Work

4/1 Hazwoper Refresher Course

BMPs are being inspected daily, and after each rain event exceeding ¾ of an inch. There have been twenty-four rain events to date through Saturday April, 2nd that were over ¾ of an inch. We did get over 1" of rain last week; however, it was over the course of two days, and we did not get over 3/4" rain in a single day. Siberton finished the new gate in the fence north of Area A last Friday. We have a guard monitoring the construction entrance gate during construction hours. The guard will be moved down to the gate north of Area A while we are hauling to Area A. Employees sign in with the guard every morning and sign out when they leave the site.

Work completed week of March 28, 2016

- Screened and Stockpiled Material at the Borrow Pit
- Plastic Fusion finished installing geomembrane in Area E
- Plastic Fusion finished installing geocomposite in Area E
- Plastic Fusion finished installing geocomposite in Area A

- Installed directional bore into Area A.
- Siberton installed new gate in the fence north of Area A.
- Began installing haul road into Area E

Work in progress for the week of April 4, 2016

- Screening and stockpiling material in Borrow Pit.
- Began to haul 12" soil cover to Area E.
- Began installing topsoil in Area E.
- Begin Installing Drainage Pipe in Area E

Work anticipated for the next two weeks

- Continue to Screen and Stockpile material.
- Brown Construction to mobilize to finish wall and footer in Area E.
- Plastic Fusion will mobilize to finish liner in Area E.
- Begin hauling 12" layer of soil cover to Area A

Opportunities

Taylor Corporation Hours are 6:30 to 4:30 M-F. Weekend work is expected for this project.

Weekly Update Meeting April 13, 2016

Project: OU-3 Remediation

Owner: Pharmacia LLC/ Solutia Inc.

Contractor: Taylor Corporation

Health and Safety

Safe hours worked through Saturday April 9, 2016 were 27,391 man hours. Daily safety meetings are being held each morning for all construction employees on site. Safety topics at the daily safety meetings this week include the following:

4/4 Congested Work Area

4/5 Accountability

4/6 Hand Tool Inspection

4/7 Excavation Safety

4/8 Hazwoper Refresher

BMPs are being inspected daily, and after each rain event exceeding ¾ of an inch. There have been twenty-five rain events to date through Saturday April, 9th that were over ¾ of an inch. We have a guard monitoring the construction entrance gate during construction hours. The guard will be moved down to the gate north of Area A while we are hauling to Area A. Employees sign in with the guard every morning and sign out when they leave the site.

Work completed week of April 4, 2016

- Finished Hauling 12" Soil Cover to Area E (Except for corner left out for access)
- Finished Hauling Topsoil to Area E (Except for corner left out for access)
- Installed 4" Perforated Pipe in Area E
- Installed #57 Stone around pipe in Area E

Work in progress for the week of April 11, 2016

- Screening and stockpiling material in Borrow Pit (weather permitting)
- Install Sod in Area E (weather permitting)
- Continue constructing Haul Road in Area A (weather permitting)
- Began to haul 12" soil cover to Area A (weather permitting)
- Will Pull Carrier Pipe through Casing at Area A

Work anticipated for the next two weeks

- Continue to Screen and Stockpile material.
- Brown Construction to mobilize to finish wall and footer in Area E.
- Plastic Fusion will mobilize to finish liner in Area E.
- Continue hauling 12" layer of soil cover to Area A
- Begin hauling Topsoil to Area A

Opportunities

Taylor Corporation Hours are 6:30 to 4:30 M-F. Weekend work is expected for this project.

Weekly Update Meeting April 20, 2016

Project: OU-3 Remediation

Owner: Pharmacia LLC/ Solutia Inc.

Contractor: Taylor Corporation

Health and Safety

Safe hours worked through Saturday April 16, 2016 were 27,893 man hours. Daily safety meetings are being held each morning for all construction employees on site. Safety topics at the daily safety meetings this past week included the following:

4/11 Fire Extinguisher Inspection

4/12 Hazwoper Pt 2

4/13 Fall Protection

4/14 PCB Awareness

4/15 Narrow Roads in Borrow Pit

BMPs are being inspected daily, and after each rain event exceeding ¾ of an inch. There have been twenty-six rain events to date through Saturday April, 16th that were over ¾ of an inch. We have a guard monitoring the construction entrance gate during construction hours. The guard will be moved down to the gate north of Area A while we are hauling to Area A. Employees sign in with the guard every morning and sign out when they leave the site.

Work completed week of April 11, 2016

- Screened and Stockpiled Material in the Borrow Pit.
- Began Constructing Haul Road in Area A.
- Began Hauling Soil Cover to Area A.
- Installed 3” Carrier Pipe through north bore in Area A.

Work in progress for the week of April 18, 2016

- Screening and stockpiling material in Borrow Pit.
- Installed Sod in Area E.
- Installing Soil Cover in Area A.
- Brown Construction to mobilize to finish footer and wall in Area E.

Work anticipated for the next two weeks

- Continue to Screen and Stockpile material.
- Complete installation of the final section of footer and wall in Area E.
- Plastic Fusion will mobilize to finish liner in Area E.
- Continue hauling 12” layer of soil cover to Area A.
- Begin hauling Topsoil to Area A.
- Reinstall Sign in Area E

Opportunities

Taylor Corporation Hours are 6:30 to 4:30 M-F. Weekend work is expected for this project.

Weekly Update Meeting April 27, 2016

Project: OU-3 Remediation

Owner: Pharmacia LLC/ Solutia Inc.

Contractor: Taylor Corporation

Health and Safety

Safe hours worked through Saturday April 23, 2016 were 28,463 man hours. Daily safety meetings are being held each morning for all construction employees on site. Safety topics at the daily safety meetings this past week included the following:

4/18 Alertness

4/19 Time on Equipment

4/20 Spotting Trucks

4/21 Rain Prep

4/22 Taking Care of yourself

BMPs are being inspected daily, and after each rain event exceeding ¾ of an inch. There have been twenty-six rain events to date through Saturday April, 23rd that were over ¾ of an inch. We have a guard monitoring the construction entrance gate during construction hours. The guard will be moved down to the gate north of Area A while we are hauling to Area A. Employees sign in with the guard every morning and sign out when they leave the site.

Work completed week of April 18, 2016

- Screen and Stockpile Material in the Borrow Pit
- Installed Sod in Area E
- Brown Began Forming Footer for Area E
- Hauled Soil Cover to Area A
- Hauled Topsoil to Area A

Work in progress for the week of April 25, 2016

- Screening and stockpiling material in Borrow Pit.
- Brown Construction will Pour Footer in Area E
- Brown Construction will begin forming Wall in Area E
- Electronic Sign will be Reinstalled in Area E
- Installing Soil Cover in Area A
- Installing Topsoil in Area A

Work anticipated for the next two weeks

- Continue to Screen and Stockpile material.
- Complete Wall in Area E.
- Complete concrete curb near western vault in Area A.
- Plastic Fusion will mobilize to finish liner in Area E.
- Backfill behind wall in Area E.
- Lay Sod behind wall in Area E.
- Finish Drainage Pipe & #57 Stone in Area E.
- Continue hauling 12" layer of soil cover to Area A.
- Continue hauling Topsoil to Area A.

Opportunities

Taylor Corporation Hours are 6:30 to 4:30 M-F. Weekend work is expected for this project.

Weekly Update Meeting May 4, 2016

Project: OU-3 Remediation

Owner: Pharmacia LLC/ Solutia Inc.

Contractor: Taylor Corporation

Health and Safety

Safe hours worked through Saturday April 30, 2016 were 28,961 man hours. Daily safety meetings are being held each morning for all construction employees on site. Safety topics at the daily safety meetings this week include the following:

4/25 Dust Control

4/26 Pre Maintenance Checks and Services

4/27 Overhead Lines

4/28 Fall Protection

4/29 Race Weekend Traffic

BMPs are being inspected daily, and after each rain event exceeding ¾ of an inch. There have been twenty-six rain events to date through Saturday April, 30th that were over ¾ of an inch. We have a guard monitoring the construction entrance gate during construction hours. The guard will be moved down to the gate north of Area A while we are hauling to Area A. Employees sign in with the guard every morning and sign out when they leave the site.

Work completed week of April 25, 2016

- Screen and Stockpile Material in the Borrow Pit
- Brown Construction Formed and Poured last of footer and wall in Area E
- Re-installed sign in Area E
- Hauled Soil Cover to Area A
- Hauled Topsoil to Area A

Work in progress for the week of May 2, 2016

- Screening and stockpiling material in Borrow Pit.
- Wrecked Wall Forms in Area E
- Finished 6” Soil Preparation under liner in Area E
- Plastic Fusion will Remobilize to finish Liner and Geocomposite in southwest corner of Area E
- Re-Connect Electrical for Sign in Area E
- Continue Hauling Soil Cover to Area A
- Continue Hauling Topsoil to Area A

Work anticipated for the next two weeks

- Continue to Screen and Stockpile material.
- Backfill behind wall in Area E.
- Lay Sod behind wall in Area E.
- Finish Drainage Pipe & #57 Stone in Area E.
- Continue hauling 12” layer of soil cover to Area A.
- Continue hauling Topsoil to Area A.

Opportunities

Taylor Corporation Hours are 6:30 to 4:30 M-F. Weekend work is expected for this project.

Weekly Update Meeting May 11, 2016

Project: OU-3 Remediation

Owner: Pharmacia LLC/ Solutia Inc.

Contractor: Taylor Corporation

Health and Safety

Safe hours worked through Saturday May 7, 2016 were 29,462 man hours. Daily safety meetings are being held each morning for all construction employees on site. Safety topics at the daily safety meetings this week include the following:

5/2 Proper PPE

5/3 Hydration

5/4 Equipment Safety

5/5 Good Hygiene

5/6 Weather Preparation

BMPs are being inspected daily, and after each rain event exceeding ¾ of an inch. There have been twenty-seven rain events to date through Saturday May 7th that were over ¾ of an inch. We have a guard monitoring the construction entrance gate during construction hours. The guard will be moved down to the gate north of Area A while we are hauling to Area A. Employees sign in with the guard every morning and sign out when they leave the site.

Work completed week of May 2, 2016

- Screened and stockpiled material
- Wrecked forms in Area E
- Finished 6" Soil Preparation under liner in southwest corner of Area E
- Plastic Fusion finished liner and geocomposite in southwest corner of Area E
- Finished Cover Soil and Topsoil in southwest corner of Area E
- Re-Connect Electrical for Sign in Area E

- Finish Drainage Pipe and #57 Stone in Area E
- Continued Hauling Cover Soil to Area A
- Continued Hauling Topsoil to Area A

Work in progress for the week of May 9, 2016

- Finish Sod in Area E
- Finished Hauling Cover Soil to Area A
- Finished Hauling Topsoil to Area A
- Begin Fine Grading Area A around vaults
- Survey Depths in Area A
- Begin Rip Rap Barrier in Area A

Work anticipated for the next two weeks

- Finish Rip Rap Barrier in Area A
- Finish fine grading Area A around vaults
- Hydroseed and Mulch Area A
- Begin Area H Slab on Grade, Fence, and Tree Removal

Opportunities

Taylor Corporation Hours are 6:30 to 4:30 M-F. Weekend work is expected for this project.

Weekly Update Meeting May 18, 2016

Project: OU-3 Remediation

Owner: Pharmacia LLC/ Solutia Inc.

Contractor: Taylor Corporation

Health and Safety

Safe hours worked through Saturday May 14, 2016 were 29,812 man hours. Daily safety meetings are being held each morning for all construction employees on site. Safety topics at the daily safety meetings this week include the following:

5/9 Nutrition

5/10 Mental Health

5/11 Congested Areas

5/12 Slips and Falls

5/13 Dust Control

BMPs are being inspected daily, and after each rain event exceeding ¾ of an inch. There have been twenty-seven rain events to date through Saturday, May 14th that were over ¾ of an inch. We have a guard monitoring the construction entrance gate during construction hours. The guard will be moved down to the gate north of Area A while we are hauling to Area A. Employees sign in with the guard every morning and sign out when they leave the site.

Work completed week of May 9, 2016

- Finished Sod in Area E
- Finished Hauling Screened Material to Area A
- Finished Hauling Topsoil to Area A
- Began Fine Grading Area A around vaults
- Surveyed Depths in Area A
- Began Rip Rap Barrier in Area A
- Added BMP's in Area A per Eastman's request

Work in progress for the week of May 16, 2016

- Fine Grade around Area A Vaults
- Hydroseed and Mulch Area A
- Finish Rip Rap Barrier in Area A
- Install Rip Rap - Check Dams in Area A per Eastman's Request
- Remove four trees in Area H
- Begin digging out for Slab on Grade in Area H (Weather Permitting)
- Install Fence Post in Area H (Weather Permitting)

Work anticipated for the next two weeks

- Finish fine grading Area A around vaults
- Finish Area H Slab on Grade, Fence Installation, and Fence Removal

Opportunities

Taylor Corporation Hours are 6:30 to 4:30 M-F. Weekend work is expected for this project.

Weekly Update Meeting May 25, 2016

Project: OU-3 Remediation

Owner: Pharmacia LLC/ Solutia Inc.

Contractor: Taylor Corporation

Health and Safety

Safe hours worked through Saturday May 21, 2016 were 30,177 man hours. Daily safety meetings are being held each morning for all construction employees on site. Safety topics at the daily safety meetings this week include the following:

5/16 Highway 202 Traffic

5/17 Wet Roads

5/18 3 Points of Contact

5/19 Safety Integrity

5/20 Task Safety Evaluation

BMPs are being inspected daily, and after each rain event exceeding ¾ of an inch. There have been twenty-seven rain events to date through Saturday, May 21 st that were over ¾ of an inch. We have a guard monitoring the construction entrance gate during construction hours. The guard will be moved down to the gate north of Area A while we are hauling to Area A. Employees sign in with the guard every morning and sign out when they leave the site.

Work completed week of May 16, 2016

- Fine Graded around Area A Vaults
- Hydroseed and Mulch Area A
- Continued Rip Rap Barrier
- Installed Rip Rap Check Dams in Area A
- Removed four trees in Area H

Work in progress for the week of May 23, 2016

- Set last junction box in Southeast Corner of Area A
- Completely finished Rip Rap Barrier in Southeast Corner of Area A
- Finished Grassing and Haying small Area around Vault in Southeast corner of Area A
- Dug for Slab on Grade in Area H
- Install Fence in Area H
- Install Slab on Grade in Area H
- Will Remove Existing Fence in Area H

Work anticipated for the next two weeks

- Finish Area H Slab on Grade, Fence
- Begin General Clean Up
- Punch List Items

Opportunities

Taylor Corporation Hours are 6:30 to 4:30 M-F. Weekend work is expected for this project.

Weekly Update Meeting June 1, 2016

Project: OU-3 Remediation

Owner: Pharmacia LLC/ Solutia Inc.

Contractor: Taylor Corporation

Health and Safety

Safe hours worked through Saturday May 28, 2016 were 30,600 man hours. Daily safety meetings are being held each morning for all construction employees on site. Safety topics at the daily safety meetings this week included the following:

5/23 Critical Lift

5/24 Complacency

5/25 House Keeping

5/26 Emergency Response Plan

5/27 Maintenance Service

BMPs are being inspected daily, and after each rain event exceeding ¾ of an inch. There have been twenty-seven rain events to date through Saturday, May 28 th that were over ¾ of an inch. Since all the soil hauling is complete the guard is no longer monitoring the construction entrance. All traffic at this point is entering and exiting through the main plant gate. Employees sign in with the guard every morning and sign out when they leave the site.

Work completed week of May 23, 2016

- Completely finished Rip Rap Barrier in Southeast Corner of Area A
- Finished Grassing and Haying small Area around Vault in Southeast corner of Area A
- Extended Rip Rap Ditch on south side of Area C&D
- Dug for Slab on Grade in Area H
- Installed Fence in Area H
- Installed Slab on Grade in Area H

- Removed Existing Fence in Area H
- Began General Clean Up

Work in progress for the week of May 30, 2016

- Re-connect the Light Pole in Eastern Area A Vault
- Wreck Forms for Slab on Grade in Area H
- Shoot Final Surveys for Area A and Area E
- Disconnect Power, Water, and Sewer to EPA/Golder Trailer
- Continue General Clean Up
- Work on Punch List Items

Work anticipated for the next two weeks

- EPA/Golder Office Trailer will be removed from the site
- Punch List Items

Opportunities

Taylor Corporation Hours are 6:30 to 4:30 M-F. Weekend work is expected for this project.

Weekly Update Meeting June 22, 2016

Project: OU-3 Remediation

Owner: Pharmacia LLC/ Solutia Inc.

Contractor: Taylor Corporation

Health and Safety

Safe hours worked through Saturday June 18, 2016 were 31,056 man hours. Daily safety meetings are being held each morning for all construction employees on site. Safety topics at the daily safety meetings the last two week included the following:

6/7 Mobilize In

6/8 Watch for Falling Rock

6/9 Heat Stress

6/10 Equipment Checks

6/13 Slips and Falls

6/14 30 Minute Lightning Rule

6/15 Unstable Soil

6/16 Hydration

6/17 Wet Conditions

BMPs are being inspected daily, and after each rain event exceeding ¾ of an inch. There have been twenty-seven rain events to date through June 18th that were over ¾ of an inch. Since all the soil hauling is complete the guard is no longer monitoring the construction entrance. All traffic at this point is entering and exiting through the main plant gate. Employees sign in with the guard every morning and sign out when they leave the site.

Work completed week of June 6th and 13th

- Restored Borrow Pit
- Finished Surveying for Final As-Built Topo

Work in Progress for week of June 20th

- Restoring Borrow Pit
- Punch List Items

Work Scheduled for the next two weeks

- Finish Borrow Pit Restoration
- Punch List Items

Opportunities

Taylor Corporation Hours are 6:30 to 4:30 M-F. Weekend work is expected for this project. There was no weekly update meeting last week as Ellis was out of town.

Weekly Update Meeting June 29, 2016

Project: OU-3 Remediation

Owner: Pharmacia LLC/ Solutia Inc.

Contractor: Taylor Corporation

Health and Safety

Safe hours worked through Saturday June 25, 2016 were 31,284 man hours. Daily safety meetings are being held each morning for all construction employees on site. Safety topics at the daily safety meetings the last two week included the following:

6/20 Work/Rest Cycle

6/21 Hydration

6/22 Heat Injuries

6/23 Heat Stress

6/24 Sun Exposure

BMPs are being inspected daily, and after each rain event exceeding ¾ of an inch. There have been twenty-seven rain events to date through June 25th that were over ¾ of an inch. Since all the soil hauling is complete the guard is no longer monitoring the construction entrance. All traffic at this point is entering and exiting through the main plant gate. Employees sign in with the guard every morning and sign out when they leave the site.

Work completed week of June 20th

- Restored Borrow Pit
- Punch List Items

Work in Progress for week of June 28th

- Restoring Borrow Pit
- Punch List Items

Work Scheduled for the next two weeks

- Finish Borrow Pit Restoration
- Punch List Items

Opportunities

Taylor Corporation Hours are 6:30 to 4:30 M-F.

Weekly Update Meeting August 24, 2016

Project: OU-3 Remediation

Owner: Pharmacia LLC/ Solutia Inc.

Contractor: Taylor Corporation

Health and Safety

Safe hours worked through Saturday August 20, 2016 were 32,486 man hours. Daily safety meetings are being held each morning for all construction employees on site. Safety topics at the daily safety meetings last week included the following:

8/17 Overhead Danger

8/18 Heat Exhaustion

8/19 Fire Extinguisher

BMPs are being inspected daily, and after each rain event exceeding ¾ of an inch. There have been twenty-eight rain events to date through August 20th that were over ¾ of an inch. Crews re-mobilized last Wednesday to work on the additional curb in Area A. All traffic at this point is entering and exiting through the main plant gate. Employees sign in with the guard every morning and sign out when they leave the site.

Work completed week of August 15th

- Began Digging out for Additional Curb and Slab on Westside of Area A

Work in Progress for week of August 22nd

- Continued Digging Out for Additional Curb and Slab on Westside of Area A
- Began Forming for Concrete for the Type A Curb and the Slab on Grade
- Will make First Pour on the Type A Curb and Slab on Grade
- Installed steps into Vaults in Area A

- Create more of swale on the Southside of C&D to prevent water from jumping out of the Rip Rap Ditch
- Add some #24 Stone for a Diversion Berm at C&D

Work Scheduled for the next two weeks

- Finish Pouring Additional Slab in Area A
- Finish Dressing Up and Re Grassing Disturbed Area in Area A

Opportunities

Taylor Corporation Hours are 6:30 to 4:30 M-F.

Weekly Update Meeting August 31, 2016

Project: OU-3 Remediation

Owner: Pharmacia LLC/ Solutia Inc.

Contractor: Taylor Corporation

Health and Safety

Safe hours worked through Saturday August 27, 2016 were 33,016 man hours. Daily safety meetings are being held each morning for all construction employees on site. Safety topics at the daily safety meetings last week included the following:

8/22 Proper PPE

8/23 Decon (Booties/Gloves During Excavation)

8/24 Hydration

8/25 Medical Response Procedure

8/26 Confined Spaces

BMPs are being inspected daily, and after each rain event exceeding ¾ of an inch. There have been twenty-eight rain events to date through August 27th that were over ¾ of an inch. All traffic at this point is entering and exiting through the main plant gate. Employees sign in with the guard every morning and sign out when they leave the site.

Work completed week of August 22nd

- Began Forming Southern Portion of Type A Curb
- Formed Slab on Grade Area on west side of Area A
- Poured Southern Portion of Type A Curb and Slab on Grade
- Installed Steps into Vaults in Area A
- Created more of a swale on the south side of C&D to prevent water from jumping out of the Ditch
- Added #24 Stone for a diversion berm in Area C&D

Work in Progress for week of August 27th

- Forming up for The northern half of the Type A Curb in Area A
- Formed up for the Type B and Type C Curb in Area A
- Will make final concrete pour for the additional curb and slabs in Area A.
- Saw Cut and Removed Asphalt Pot holes, and replaced them with Hot Mix Asphalt
- Cut Liner and Geocomposite and then backfilled behind southern portion of Type A Curb.

Work Scheduled for the next two weeks

- Finish Dressing Up and Re Grassing Disturbed Area in Area A

Opportunities

Taylor Corporation Hours are 6:30 to 4:30 M-F.

Weekly Update Meeting September 7, 2016

Project: OU-3 Remediation

Owner: Pharmacia LLC/ Solutia Inc.

Contractor: Taylor Corporation

Health and Safety

Safe hours worked through Saturday September 3, 2016 were 33,416 man hours. Daily safety meetings are being held each morning for all construction employees on site. Safety topics at the daily safety meetings last week included the following:

8/29 QCI Refresher Questions

8/30 Fire Safety

8/31 Emergency Response

9/1 Heat Stress

9/2 Work Practices

BMPs are being inspected daily, and after each rain event exceeding ¾ of an inch. There have been twenty-eight rain events to date through September 3rd that were over ¾ of an inch. All traffic at this point is entering and exiting through the main plant gate. Employees sign in with the guard every morning and sign out when they leave the site.

Work completed week of August 29th

- Formed for the northern half of Type A Curb in Area A
- Formed up for Type B and Type C Curb in Area A
- Made Final Concrete Pour for the Additional Curb and Slabs in Area A
- Saw cut and removed Asphalt Potholes, and replaced them with Hot Mix Asphalt
- Cut Liner and Geocomposite and then backfilled behind Type A Curb

- Closed out sediment basin in Borrow Pit
- Re-grassed bare areas in Borrow Pit and PCB Cells

Work in Progress for week of September 5th

- No work on Monday due to Labor Day
- Installed Sod behind new concrete in Area A
- Wrecked All forms from Concrete work

Work Scheduled for the next two weeks

- Continue watering to establish sod in Area A

Opportunities

Taylor Corporation Hours are 6:30 to 4:30 M-F.

Weekly Update Meeting August 12, 2015

Project: OU-3 Remediation – Groundwater Components

Owner: Pharmacia LLC/ Solutia Inc.

Contractor: Golder Associates

Health and Safety

- Upon arrival on site, the drillers went through the H&S orientation for the plant site.
- Alabama 811 was contacted to clear utilities for new interceptor well locations. Hand auger holes were advanced to clear utilities prior to drilling.
- Conducted regular H&S briefings. Topics included:
    - Reviewed H&S requirements regarding utilities and the excavation permit policy;
    - Discussed plant PPE requirements and cell phone policy;
    - Discussed general safety requirements and working around heavy equipment; and
    - Discussed working near drill rigs.

Work completed week of August 3, 2015

- Located interceptor well locations
- Excavated 4x4 drill pads and placed material in roll-offs
- Replaced excavated material with clean fill material

Work in progress for the week of August 10, 2015

- Modifying existing wells located in Areas A and E
- Abandoning OWR-6D
- Installing the four new interceptor wells

Work anticipated for the next two weeks

- Preparing submittals for pumping, piping and treatment systems

Opportunities

Weekly Update Meeting August 19, 2015

Project: OU-3 Remediation – Groundwater Components

Owner: Pharmacia LLC/ Solutia Inc.

Contractor: Golder Associates

Health and Safety

- 194 safe hours worked through Saturday 8/15/2015
- Golder performed daily health and safety briefings with drilling subcontractor. Items discussed included:
    - Poison ivy
    - Traffic safety
    - Stray dogs
    - Slips, trips, and falls due to wet ground surface
- Drilling and installation of four new interceptor wells was completed without a health and safety incident

Work completed week of August 10, 2015

- Drilled, installed, and developed interceptor wells (IW-26 through IW-29)
- Raised existing in-ground well casings in Area E and Area A
- Removed and grouted of OWR-6D

Work in progress for the week of August 17, 2015

- Dispose of drums used to collect well development water
- Relocate and remove roll-offs used for well pads and drilling material

Work anticipated for the next two weeks

- Preparing submittals for pumping, piping and treatment systems

Opportunities

Weekly Update Meeting August 26, 2015

Project: OU-3 Remediation – Groundwater Components

Owner: Pharmacia LLC/ Solutia Inc.

Contractor: Golder Associates

Health and Safety

- 195 safe hours worked through Saturday 8/22/2015

Work completed week of August 17, 2015

- Installed well caps and locks on the four new Interceptor Wells and the three modified stick-ups.

Work in progress for the week of August 24, 2015

- Dispose of drums used to collect well development water
- Relocate and remove roll-offs used for well pads and drilling material

Work anticipated for the next two weeks

- Preparing submittals for pumping, piping and treatment systems

Opportunities

Weekly Update Meeting September 2, 2015

Project: OU-3 Remediation – Groundwater Components

Owner: Pharmacia LLC/ Solutia Inc.

Contractor: Golder Associates

Health and Safety

- 195 safe hours worked through Saturday 8/29/2015

Work completed week of August 24, 2015

- Relocate and remove roll-offs used for well pads and drilling material

Work in progress for the week of August 31, 2015

- Dispose of drums used to collect well development water

Work anticipated for the next two weeks

- Preparing submittals for pumping, piping and treatment systems

Opportunities

- Kevin Killoran (Golder Groundwater Systems Engineer) is on site the week of September 1 to meet with subcontractors, plant personnel, and walk the site.

Weekly Update Meeting September 9, 2015

Project: OU-3 Remediation – Groundwater Components

Owner: Pharmacia LLC/ Solutia Inc.

Contractor: Golder Associates

Health and Safety

- 225 safe hours worked through Saturday 9/05/2015

Work completed week of August 31, 2015

- Kevin Killoran (Golder Groundwater Systems Engineer) was on site to meet with subcontractors (electrician and field crew), Plant personnel, and walk the site. Kevin met with Plant personnel to discuss ergonomic and maintenance access associated with the groundwater system.

Work in progress for the week of September 7, 2015

- Dispose of drums used to collect well development water

Work anticipated for the next two weeks

- Preparing submittals for pumping, piping and treatment systems

Opportunities

- Golder is continuing to work with Taylor Corp to prepare submittals and schedule

Weekly Update Meeting September 16, 2015

Project: OU-3 Remediation – Groundwater Components

Owner: Pharmacia LLC/ Solutia Inc.

Contractor: Golder Associates

Health and Safety

- 225 safe hours worked through Saturday 9/12/2015

Work completed week of September 7, 2015

- Golder is continuing to work with Taylor Corp to prepare submittals and schedule

Work in progress for the week of September 14, 2015

- Preparing submittals for pumping, piping and treatment systems

Work anticipated for the next two weeks

- Continue to develop submittals
- Dispose of drums used to collect well development water

Opportunities

- Taylor Corp. is coordinating with manufacturers for production of carbon treatment shed and other project components

Weekly Update Meeting September 23, 2015

Project: OU-3 Remediation – Groundwater Components

Owner: Pharmacia LLC/ Solutia Inc.

Contractor: Golder Associates

Health and Safety

- 225 safe hours worked on site through Saturday 9/19/2015

Work completed week of September 14, 2015

- Golder is continuing to work with Taylor Corp to prepare submittals and schedule

Work in progress for the week of September 21, 2015

- Preparing submittals for pumping, piping and treatment systems
- Additional roll-off containers are being delivered to site the week of September 21 for material disposal. Drums used for drilling water are currently empty; Golder will coordinate with Taylor Corp to use equipment to crush and disposed of drums in a roll-off

Work anticipated for the next two weeks

- Continue to develop submittals
- Golder will be working with Taylor to inspect the aboveground pipe for WMA-II area

Opportunities

- Taylor Corp. is coordinating with manufacturers for production of carbon treatment shed and other project components

Weekly Update Meeting September 30, 2015

Project: OU-3 Remediation – Groundwater Components

Owner: Pharmacia LLC/ Solutia Inc.

Contractor: Golder Associates

Health and Safety

- 225 safe hours worked on site through Saturday 9/26/2015

Work completed week of September 21, 2015

- Golder is continuing to work with Taylor Corp. to prepare submittals and schedule

Work in progress for the week of September 28, 2015

- Reviewing submittals for pumping, piping and treatment systems
- Drums used for drilling water are currently empty; Taylor Corp. is scheduled to crush and disposed of drums in a roll-off once equipment is available

Work anticipated for the next two weeks

- Continue to develop and review submittals

Opportunities

- Taylor Corp. is coordinating with manufacturers for production of carbon treatment shed and other project components

Weekly Update Meeting October 7, 2015

Project: OU-3 Remediation – Groundwater Components

Owner: Pharmacia LLC/ Solutia Inc.

Contractor: Golder Associates

Health and Safety

- 225 safe hours worked on site through Saturday 10/3/2015

Work completed week of September 28, 2015

- Golder is continuing to work with Taylor Corp to prepare submittals.

Work in progress for the week of October 5, 2015

- Two drums used to collect well development water have been disposed of in roll-off container. Remaining drums will be disposed when equipment is made available.
- Reviewing submittals for pumping, piping and treatment systems. Golder is preparing submittal package for review by Solutia.

Work anticipated for the next two weeks

- Golder plans to have first submittal package ready for review the week of October 12.
- Golder will coordinate with Taylor Corp. to prepare for mobilization to site. First construction activities will include surveying, installing E&S control, and installation of underground conveyance piping system.

Opportunities

- Golder and Taylor Corp. have conducted several conference calls and meetings for project coordination.

Weekly Update Meeting October 14, 2015

Project: OU-3 Remediation – Groundwater Components

Owner: Pharmacia LLC/ Solutia Inc.

Contractor: Golder Associates

Health and Safety

- 225 safe hours worked on site through Saturday 10/10/2015

Work completed week of October 5, 2015

- Golder is continuing to work with Taylor Corp to prepare submittals.

Work in progress for the week of October 12, 2015

- Remaining drums will be disposed when equipment is made available.
- Golder and Taylor are compiling submittals for pumping, piping and treatment systems. Golder is preparing submittal package for review by Solutia.

Work anticipated for the next two weeks

- Golder will coordinate with Taylor Corp. to prepare for mobilization to site. First construction activities will include surveying, installing E&S control, and installation of underground conveyance piping system.

Opportunities

- Golder and Taylor Corp. have conducted several conference calls and meetings for project coordination.

Weekly Update Meeting October 21, 2015

Project: OU-3 Remediation – Groundwater Components

Owner: Pharmacia LLC/ Solutia Inc.

Contractor: Golder Associates

Health and Safety

- 225 safe hours worked on site through Saturday 10/10/2015

Work completed week of October 12, 2015

- Golder is continuing to work with Taylor Corp to prepare submittals.

Work in progress for the week of October 19, 2015

- Golder has sent Solutia a submittal package for products and materials proposed for the construction or modification of the belowground portions of the groundwater extractions system.
- Golder has also sent Solutia a submittal schedule for review.

Work anticipated for the next two weeks

- Separate submittals are being prepared for the aboveground work.

Opportunities

- Golder and Taylor Corp. have conducted several conference calls and meetings for project coordination.

Weekly Update Meeting October 28, 2015

Project: OU-3 Remediation – Groundwater Components

Owner: Pharmacia LLC/ Solutia Inc.

Contractor: Golder Associates

Health and Safety

- 225 safe hours worked on site through Saturday 10/24/2015

Work completed week of October 19, 2015

- Golder is continuing to work with Taylor Corp to prepare submittals.
- Golder has sent Solutia a submittal package for products and materials proposed for the construction or modification of the belowground portions of the groundwater extractions system.

Work in progress for the week of October 26, 2015

- Solutia has approved the belowground portions of the groundwater submittals.
- Continue working with Taylor on aboveground portions of the submittals.

Work anticipated for the next two weeks

- Separate submittals are being prepared for the aboveground work.

Opportunities

- Golder and Taylor Corp. have conducted several conference calls and meetings for project coordination.

Weekly Update Meeting November 4, 2015

Project: OU-3 Remediation – Groundwater Components

Owner: Pharmacia LLC/ Solutia Inc.

Contractor: Golder Associates

Health and Safety

- 225 safe hours worked on site through Saturday 10/31/2015

Work completed week of October 26, 2015

- Golder is continuing to work with Taylor Corp to prepare submittals.

Work in progress for the week of November 9, 2015

- Continue working with Taylor on aboveground portions of the submittals. Will submit Carbon Treatment Enclosure submittal this week.

Work anticipated for the next two weeks

- Separate submittals are being prepared for the aboveground work.

Opportunities

Weekly Update Meeting November 11, 2015

Project: OU-3 Remediation – Groundwater Components

Owner: Pharmacia LLC/ Solutia Inc.

Contractor: Golder Associates

Health and Safety

- 225 safe hours worked on site through Saturday 11/07/2015

Work completed week of November 2, 2015

- Golder is continuing to work with Taylor Corp to prepare submittals.
- Golder has released Taylor Corporation to proceed with procuring the following items: pre-cast concrete carbon treatment system enclosures, HDPE and PVC piping materials, PVC valves, flowmeters, pre-cast well and flow meter vaults, dense graded aggregate (DGA) materials, and temporary erosion and control devices.

Work in progress for the week of November 9, 2015

- Continue working with Taylor on aboveground portions of the submittals.
- Golder currently is preparing submittals for the following items: submersible well pumps and controls, carbon treatment system absorption units, electrical materials, and metal ladder tray system for supporting the elevated HDPE conveyance pipe in WMA II area.

Work anticipated for the next two weeks

- Separate submittals are being prepared for the aboveground work.

Opportunities

Weekly Update Meeting November 18, 2015

Project: OU-3 Remediation – Groundwater Components

Owner: Pharmacia LLC/ Solutia Inc.

Contractor: Golder Associates

Health and Safety

- 225 safe hours worked on site through Saturday 11/14/2015

Work completed week of November 9, 2015

- Golder is continuing to work with Taylor Corp to prepare submittals.
- Taylor Corporation is procuring the following items: pre-cast concrete carbon treatment system enclosures, HDPE and PVC piping materials, PVC valves, flowmeters, pre-cast well and flow meter vaults, dense graded aggregate (DGA) materials, and temporary erosion and control devices.

Work in progress for the week of November 16, 2015

- Continue working with Taylor on aboveground portions of the submittals.
- Golder currently is preparing submittals for the following items: submersible well pumps and controls, carbon treatment system absorption units, electrical materials, and metal ladder tray system for supporting the elevated HDPE conveyance pipe in WMA II area.

Work anticipated for the next two weeks

- Separate submittals are being prepared for the aboveground work.
- Will mobilize to the site over the next two weeks to conduct survey and set up for initial field activities.
- Will initiate work on non-RA groundwater system upgrades. Installation of flow meter vaults.

Opportunities

- Work with Anniston Water and Sewer to finalize connection permit for treated groundwater discharge.

Weekly Update Meeting December 2, 2015

Project: OU-3 Remediation – Groundwater Components

Owner: Pharmacia LLC/ Solutia Inc.

Contractor: Golder Associates

Health and Safety

- 225 safe hours worked on site through Saturday 11/28/2015

Work completed weeks of November 16 and 23, 2015

- Golder continued to work with Taylor Corp to prepare submittals.

Work in progress for the week of November 30, 2015

- Continue working with Taylor on aboveground portions of the submittals.
- Golder currently is preparing submittals for the following items: submersible well pumps and controls, carbon treatment system absorption units, electrical materials, and metal ladder tray system for supporting the elevated HDPE conveyance pipe in WMA II area.

Work anticipated for the next two weeks

- Separate submittals are being prepared for the aboveground work.
- Will mobilize to the site over the next two weeks to conduct survey and set up for initial field activities.
- Will initiate work on non-RA groundwater system upgrades. Installation of ladder tray and flow meter vaults.

Opportunities

- Work with Anniston Water and Sewer to finalize connection permit for treated groundwater discharge.

Weekly Update Meeting December 9, 2015

Project: OU-3 Remediation – Groundwater Components

Owner: Pharmacia LLC/ Solutia Inc.

Contractor: Golder Associates

Health and Safety

- 225 safe hours worked on site through Saturday 12/05/2015

Work completed week of November 30, 2015

- Golder continued to work with Taylor Corp to prepare submittals.

Work in progress for the week of December 7, 2015

- Taylor plans to determine depth of current piping at the South Landfill flow meter vaults.
- Golder has currently submitted all construction submittals with the exception of electrical materials.

Work anticipated for the next two weeks

- Mobilize to the site over the next two weeks to conduct survey and set up for initial field activities.
- Initiate work on non-RA groundwater system upgrades. Installation of ladder tray and flow meter vaults.

Opportunities

- Submitted connection information to Anniston Sewer and Water Board to finalize connection permit for treated groundwater discharge.

Weekly Update Meeting December 16, 2015

Project: OU-3 Remediation – Groundwater Components

Owner: Pharmacia LLC/ Solutia Inc.

Contractor: Golder Associates

Health and Safety

- 261 safe hours worked on site through Saturday 12/12/2015

Work completed week of December 7, 2015

- Taylor excavated several locations to locate existing piping for vault tie ins.

Work in progress for the week of December 14, 2015

- Taylor plans to determine depth of current piping at the South Landfill flow meter vaults.
- Golder has currently submitted all construction submittals with the exception of electrical materials.

Work anticipated for the next two weeks

- Mobilize to the site over the next week; set up for initial field activities.
- Initiate work on non-RA groundwater system upgrades. Installation of ladder tray and flow meter vaults.

Opportunities

- Submitted connection information to Anniston Sewer and Water Board to finalize connection permit for treated groundwater discharge.

Weekly Update Meeting December 22, 2015

Project: OU-3 Remediation – Groundwater Components

Owner: Pharmacia LLC/ Solutia Inc.

Contractor: Golder Associates

Health and Safety

- 340 safe hours worked on site through Saturday 12/19/2015

Work completed week of December 14, 2015

- The aluminum pipe rack was delivered to site on Dec 17; installation began on Dec 18.
- Location of existing groundwater piping system initiated.

Work in progress for the week of December 21, 2015

- Taylor continues to install pipe rack.
- Golder is coordinating with Taylor for the order and delivery of pumps, controllers, and carbon treatment system.

Work anticipated for the next two weeks upon return

- Continue work on non-RA groundwater system upgrades – pipe rack system.

Opportunities

- Mechanical work for the Groundwater Project is not severely affected by rain events so will continue to work on these components as weather delays are expected.
- Will be off after December 22 in observation of Christmas Holidays and will resume on January 4.

Weekly Update Meeting January 13, 2016

Project: OU-3 Remediation – Groundwater Components

Owner: Pharmacia LLC/ Solutia Inc.

Contractor: Golder Associates

Health and Safety

- 660 safe hours worked on site through Saturday 1/9/2016

Work completed week of January 4, 2016

- Installation of aluminum pipe rack.
- Pipe was secured to pipe rack using U-bolt clamps.

Work in progress for the week of January 11, 2016

- Finish securing of pipe with U-bolts.
- Delivery of prefabricated enclosure for carbon treatment drums is scheduled for 1/15.

Work anticipated for the next two weeks

- Delivery and installation of carbon treatment enclosures.
- Dig trench and assemble well-head for conveyance piping.

Weekly Update Meeting January 20, 2016

Project: OU-3 Remediation – Groundwater Components

Owner: Pharmacia LLC/ Solutia Inc.

Contractor: Golder Associates

Health and Safety

- 744 safe hours worked on site through Saturday 1/16/2016
- New subcontractor (Littleton) has gone through orientation and background check process

Work completed week of January 11, 2016

- Taylor prepped the foundation for carbon treatment enclosure at IW-26 and IW-27. Electrical conduit and HDPE were stubbed out for connection between enclosure and wells.
- On 1/15/2015 Taylor installed carbon treatment enclosure.

Work in progress for the week of January 18, 2016

- Installation of well vaults at IW-26 and IW-27.
- Run electrical conduit and conveyance pipe between wells and enclosure.

Work anticipated for the next two weeks

- Assemble well-heads at IW-26 and IW-27.
- Trench and install conveyance piping between enclosure and AWWSB tie-in point.

Weekly Update Meeting January 27, 2016

Project: OU-3 Remediation – Groundwater Components

Owner: Pharmacia LLC/ Solutia Inc.

Contractor: Golder Associates

Health and Safety

- 845 safe hours worked on site through Saturday 1/23/2016

Work completed week of January 18, 2016

- Taylor began trenching and laying conduit/conveyance pipe between the carbon treatment enclosure and IW-26 and IW-27 well vaults. Trenches are being lined with geotextile marker layer and backfilled with clean soil.

Work in progress for the week of January 25, 2016

- Trench and extend conveyance piping from enclosure to AWWSB tie-in

Work anticipated for the next two weeks

- Assemble well-heads at IW-26 and IW-27.
- Continue trenching and installing conveyance piping between enclosure and AWWSB tie-in point.

Weekly Update Meeting February 3, 2016

Project: OU-3 Remediation – Groundwater Components

Owner: Pharmacia LLC/ Solutia Inc.

Contractor: Golder Associates

Health and Safety

- 1,005 safe hours worked on site through Saturday 1/30/2016

Work completed week of January 25, 2016

- Taylor continued to trench and lay conduit/conveyance pipe between the carbon treatment enclosure and AWWSB tie-in. Trenches are being lined with geotextile marker layer and backfilled with clean soil;
- Installed concrete flow meter vault at IW-14.

Work in progress for the week of February 1, 2016

- Complete installation of conveyance piping from enclosure to AWWSB tie-in;
- Install carbon treatment vessels and piping within enclosure.

Work anticipated for the next two weeks

- Assemble well-heads at IW-26 and IW-27;
- Pressure test conveyance pipe;
- Complete piping within carbon treatment enclosure.

Weekly Update Meeting February 10, 2016

Project: OU-3 Remediation – Groundwater Components

Owner: Pharmacia LLC/ Solutia Inc.

Contractor: Golder Associates

Health and Safety

- 1,200 safe hours worked on site through Saturday 2/06/2016

Work completed week of February 1, 2016

- Conveyance piping was installed up to the AWWSB tie-in point. Pipe is stubbed out and ready to be tapped into manhole;
- Installed carbon treatment vessels, valves, bag filter, pressure gauges, and piping within enclosure;

Work in progress for the week of February 8, 2016

- Locate and prepare conveyance piping for flow meter vaults at south landfill;

Work anticipated for the next two weeks

- Assemble well-heads at IW-26 and IW-27;
- Pressure test conveyance pipe at IW-26 and IW-27;

Weekly Update Meeting February 16, 2016

Project: OU-3 Remediation – Groundwater Components

Owner: Pharmacia LLC/ Solutia Inc.

Contractor: Golder Associates

Health and Safety

- 1,340 safe hours worked on site through Saturday 2/13/2016

Work completed week of February 8, 2016

- Locate and prepare conveyance piping for flow meter vaults at south landfill, and conduct flow tests in conveyance lines (non-RA work);

Work in progress for the week of February 15, 2016

- Pressure test conveyance piping for flow meter vaults at south landfill (non-RA work);

Work anticipated for the next two weeks

- Assemble well-heads at IW-26 and IW-27;
- Pressure test conveyance pipe at IW-26 and IW-27;

Weekly Update Meeting February 24, 2016

Project: OU-3 Remediation – Groundwater Components

Owner: Pharmacia LLC/ Solutia Inc.

Contractor: Golder Associates

Health and Safety

- 1,640 safe hours worked on site through Saturday 2/20/2016

Work completed week of February 15, 2016

- Implemented an interim system to collect groundwater from SWMU-1. Frac tanks have been mobilized to site for temporary storage and conveyance piping is discharging directly into tanks (non-RA work);

Work in progress for the week of February 22, 2016

- Assemble pumps and well-heads at IW-26 and IW-27;
- Coordinate with hauling company to transport water from the temporary frac tanks to the facility's wet well (non-RA work).

Work anticipated for the next two weeks

- Install butterfly valves within six interceptor wells, and Basin 5 & 6 discharges, as part of system upgrades (non-RA work);
- Begin implementing upgrades to the SWMU-1 system (non-RA work).

Weekly Update Meeting March 2, 2016

Project: OU-3 Remediation – Groundwater Components

Owner: Pharmacia LLC/ Solutia Inc.

Contractor: Golder Associates

Health and Safety

- 1,860 safe hours worked on site through Saturday 2/27/2016

Work completed week of February 22, 2016

- The interceptor well system with temporary frac tanks was brought online for storage of groundwater at SWMU 1 (non-RA work);
- Assembled pumps and well-heads at IW-26 and IW-27

Work in progress for the week of February 29, 2016

- Conduct pressure test of conveyance piping at IW-26 and IW-27;
- Install outlet valves at Basins 5 and 6 (non-RA work);
- Install flow control valves and brackets in 24-inch wells at WMA II (non-RA work);

Work anticipated for the next two weeks

- Connect conveyance pipe to POTW tie-in at IW-26 and IW-27;
- Construct well modifications in Area A and E to allow for cover construction;

Weekly Update Meeting March 9, 2016

Project: OU-3 Remediation – Groundwater Components

Owner: Pharmacia LLC/ Solutia Inc.

Contractor: Golder Associates

Health and Safety

- 2,090 safe hours worked on site through Saturday 2/27/2016

Work completed week of February 29, 2016

- Installed flow control valves and brackets in 24-inch wells at WMA II (non-RA work);
- Installed outlet valves at Basins 5 and 6 (non-RA work);

Work in progress for the week of March 7, 2016

- Completed and passed pressure test of conveyance piping at IW-26 and IW-27 (test was conducted on system of lines connecting pumps, running inside carbon treatment system, and discharging to POTW tie-in);
- Construct well modifications on 2-inch wells in Area A and Area E to allow for geomembrane and soil cover placement;

Work anticipated for the next two weeks

- Connect conveyance pipe to POTW tie-in at IW-26 and IW-27;

Weekly Update Meeting March 16, 2016

Project: OU-3 Remediation – Groundwater Components

Owner: Pharmacia LLC/ Solutia Inc.

Contractor: Golder Associates

Health and Safety

- 2,221.5 safe hours worked on site through Saturday 3/12/2016

Work completed week of March 7, 2016

- Completed and passed pressure test of conveyance piping at IW-26 and IW-27 (test was conducted on system of lines connecting pumps, running inside carbon treatment system, and discharging to POTW tie-in);
- Constructed well modifications on 2-inch wells in Area A and Area E to allow for geomembrane and soil cover placement;
- Installed new wiring for IW wells IW-16 through IW-21, with the exception of IW-20 (non-RA work); and
- Installed wiring for water level sensors in IW-26 and IW-27.

Work in progress for the week of March 14, 2016

- Complete new wiring for IW wells IW-16 through IW-21, with the exception of IW-20 (non-RA work);
- Connect power to the carbon treatment system at IW-26 and IW-27; and
- Install water level sensors in IW-26 and IW-27.

Work anticipated for the next two weeks

- Prepare design for submittal to the EPA regarding plans to address the seep area.

Weekly Update Meeting March 23, 2016

Project: OU-3 Remediation – Groundwater Components

Owner: Pharmacia LLC/ Solutia Inc.

Contractor: Golder Associates

Health and Safety

- 2,231.5 safe hours worked on site through Saturday 3/19/2016

Work completed week of March 14, 2016

- Completed new wiring for IW wells IW-16 through IW-21 (non-RA work); and
- Installed inlet valve on existing piping adjacent to Tank T-100 (non-RA work).

Work in progress for the week of March 21, 2016

- Prepare design for submittal to the EPA regarding plans to address the seep area.

Work anticipated for the next two weeks

- Connect power to the carbon treatment system at IW-26 and IW-27;
- Startup and commissioning of CTS at IW-26 and IW-27; and
- Prepare design for submittal to the EPA regarding plans to address the seep area.

Weekly Update Meeting March 30, 2016

Project: OU-3 Remediation – Groundwater Components

Owner: Pharmacia LLC/ Solutia Inc.

Contractor: Golder Associates

Health and Safety

- 2,231.5 safe hours worked on site through Saturday 3/26/2016

Work completed week of March 21, 2016

- Started design for submittal to the EPA regarding plans to address the seep area.

Work in progress for the week of March 28, 2016

- Continue design for submittal to the EPA regarding plans to address the seep area.

Work anticipated for the next two weeks

- Connect power to the carbon treatment system (CTS) at IW-26 and IW-27; and
- Startup and commissioning of CTS at IW-26 and IW-27;

Weekly Update Meeting April 6th, 2016

Project: OU-3 Remediation – Groundwater Components

Owner: Pharmacia LLC/ Solutia Inc.

Contractor: Golder Associates

Health and Safety

- 2,234.5 safe hours worked on site through Saturday 4/2/2016

Work completed week of March 28, 2016

- Continued design for submittal to the EPA regarding plans to address the seep area.
- Connected power to the carbon treatment system (CTS) at IW-26 and IW-27.

Work in progress for the week of April 4th, 2016

- Startup and commissioning of CTS at IW-26 and IW-27;

Work anticipated for the next two weeks

- Submit design of the seep area to the EPA for review and approval.

Weekly Update Meeting April 13th, 2016

Project: OU-3 Remediation – Groundwater Components

Owner: Pharmacia LLC/ Solutia Inc.

Contractor: Golder Associates

Health and Safety

- 2,376.5 safe hours worked on site through Friday 4/8/2016

Work completed week of Aril 4th, 2016

- Continued design for submittal to the EPA regarding plans to address the seep area.
- Startup and commissioning of CTS at IW-26 and IW-27.

Work in progress for the week of April 11th, 2016

- Continue design for submittal to the EPA regarding plans to address the seep area.

Work anticipated for the next two weeks

- Submit design of the seep area to the EPA for review and approval.

Weekly Update Meeting April 20th, 2016

Project: OU-3 Remediation – Groundwater Components

Owner: Pharmacia LLC/ Solutia Inc.

Contractor: Golder Associates

Health and Safety

- 2,399 safe hours worked on site through Sunday 4/17/2016

Work completed week of Aril 11th, 2016

- Installed 3-inch groundwater pipe at north end of Area A.
- Continued design for submittal to the EPA regarding plans to address the seep area.

Work in progress for the week of April 18th, 2016

- Continue design for submittal to the EPA regarding plans to address the seep area.

Work anticipated for the next two weeks

- Submit design of the seep area to the EPA for review and approval.
- Install groundwater pipe along eastern section of Area A.

Weekly Update Meeting April 27th, 2016

Project: OU-3 Remediation – Groundwater Components

Owner: Pharmacia LLC/ Solutia Inc.

Contractor: Golder Associates

Health and Safety

- 2,399 safe hours worked on site through Sunday 4/24/2016

Work completed week of Aril 18th, 2016

- Finished draft submittal for SWMU1 Modifications

Work in progress for the week of April 25th, 2016

- Address comments to the draft SWMU1 Modification submittal.

Work anticipated for the next two weeks

- Submit SWMU1 Modification packet to the EPA for review and approval.
- Install groundwater piping along eastern section of Area A.

Weekly Update Meeting May 4th, 2016

Project: OU-3 Remediation – Groundwater Components

Owner: Pharmacia LLC/ Solutia Inc.

Contractor: Golder Associates

Health and Safety

- **2,419** safe hours worked on site through Sunday 5/01/2016.

Work completed week of Aril 25th, 2016

- Placed groundwater piping and electrical conduit on top of liner on eastern section of Area A.

Work in progress for the week of May 2nd , 2016

- Complete installation of piping in Area A.
- Pressure test Area A piping before covering with Soil.
- Address comments to SWMU1 Modification packet.

Work anticipated for the next two weeks

- Submit SWMU1 Modification packet to the EPA for review and approval.

Weekly Update Meeting May 11th, 2016

Project: OU-3 Remediation – Groundwater Components

Owner: Pharmacia LLC/ Solutia Inc.

Contractor: Golder Associates

Health and Safety

- **2,439** safe hours worked on site through Sunday 5/08/2016.

Work completed week of May 2nd, 2016

- Finished Placing groundwater piping and electrical conduit on top of liner on eastern section of Area A.

Work in progress for the week of May 9th , 2016

- Installing IW vaults at IW 28 and IW 29.
- Addressing comments to SWMU1 Modification packet.

Work anticipated for the next two weeks

- Pressure test piping in Area A.
- IW well head completions.
- Submit SWMU1 Modification packet to the EPA for review and approval.

Weekly Update Meeting May 18th, 2016

Project: OU-3 Remediation – Groundwater Components

Owner: Pharmacia LLC/ Solutia Inc.

Contractor: Golder Associates

Health and Safety

- **2,516** safe hours worked on site through Sunday 5/15/2016.

Work completed week of May 9th, 2016

- Installed IW vaults at IW 28 and IW 29.
- Finished placing groundwater piping and electrical conduit in Area A.
- Addressed comments to SWMU1 Modification packet.

Work in progress for the week of May 16th, 2016

- Submitted SWMU1 Modification packet to the EPA for review and approval.
- Building compacted DGA pad for CTS in Area A.

Work anticipated for the next two weeks

- Submit ALDOT permit application for SWMU 1 conveyance (non-RA work).

Weekly Update Meeting May 25th, 2016

Project: OU-3 Remediation – Groundwater Components

Owner: Pharmacia LLC/ Solutia Inc.

Contractor: Golder Associates

Health and Safety

- **2,600.5** safe hours worked on site through Sunday 5/22/2016.

Work completed week of May 16th, 2016

- Submitted SWMU1 Modification packet to the EPA for review and approval
- Prepared compacted DGA pad for CTS enclosure in Area A
- Permit application submitted to ALDOT

Work in progress for the week of May 23rd, 2016

- Set CTS enclosure on DGA pad in Area A
- Finish installing vaults in Area A
- Follow up on ALDOT permit application

Work anticipated for the next two weeks

- Follow up on ALDOT permit application if required

Weekly Update Meeting June 1st, 2016

Project: OU-3 Remediation – Groundwater Components

Owner: Pharmacia LLC/ Solutia Inc.

Contractor: Golder Associates

Health and Safety

- **2,773** safe hours worked on site through Sunday 5/29/2016.

Work completed week of May 23rd, 2016

- Set CTS enclosure in Area A
- Finished installing vaults in Area A
- Formed and poured the well pads in Areas A and E.

Work in progress for the week of May 31st, 2016

- Follow up on ALDOT and City of Anniston permit applications

Work anticipated for the next two weeks

- Follow up on permit applications
- Work on design criteria document for submittal to EPA

APPENDIX W

STORMWATER INSPECTION AND MAINTENANCE REPORT FORMS

STORMWATER INSPECITON AND MAINTENANCE REPORT FORM

Site Name: Anniston PCB Site, OU-3 Remedial Action Cover Systems

Site Location: Anniston, Calhoun County, Alabama

NPDES Permit Number: Not Applicable

Weekly Rainfall Summary:

Day:	Sun	Mon	Tues	Wed	Thurs	Fri	Sat
Date:	8-9-15	8-10-15	8-11-15	8-12-15	8-13-15	8-14-15	8-15-15
Rainfall:	.12"	.00"	.00"	.00"	.23"	.10"	.00"

Sampling Information:

- **Sample Type:**
- **Location:**
- **Analysis:**

Inspection Results:

- **Deficiencies or Required Maintenance:**
- **Planned Corrective Action:**
- **Corrective Action Schedule:**
- **Other Comments:**

Signature 8-17-15 **Date**

CBMPP INSPECTION FIELD REPORT LOG

Contractor Name: Taylor Corp
Site Name: OU-3 Remedial Action Specific Area: PCB Cell Borrow Area
Site Location (City, County, State): Anniston, Calhoun County, Alabama

Date: 8-10-15

Weather Conditions: Temp: Min 72° Max 95°
Description (Sunny, Cloudy, Overcast, etc) T-Storms
Precipitation: .00 Inches

Work Performed Today (Indicate location and description of work performed and note any safety issues or deviations from the H&S plan):

Continued work on Decon Pad # 2
Continued work @ Borrow Area
Began Chipping Wood

	Yes	No
BMP maintenance and inspection:		
a) Inspection of engineering controls performed (ea. week and after rainfall)?	☑	☐
b) Attach weekly inspection forms (BMP and stormwater forms)?	☑	☐
c) Note any correction of defects below?	☑	☐
d) Weekly stormwater form?	☑	☐

Comments: Bmps in Good Condition
no Faults or Discharge

Dust maintenance and monitoring: PDR1000: 2) .084 mg/m3
3) .084 mg/m3
Water Applied for Dust Suppression

(note if dust suppression is applied)

Jason W. Joiner
Name / Signature

8-11-15
Date

CBMPP INSPECTION FIELD REPORT LOG

Contractor Name: Taylor Corp
Site Name: OU-3 Remedial Action Specific Area: PCB Cell Borrow Area
Site Location (City, County, State): Anniston, Calhoun County, Alabama

Date: 8-11-15

Weather Conditions: Temp: Min 72° Max 93°
Description (Sunny, Cloudy, Overcast, etc) Partly Cloudy
Precipitation: .00 Inches

Work Performed Today (Indicate location and description of work performed and note any safety issues or deviations from the H&S plan):

Continued work @ Borrow Area
Continued chipping operations

	Yes	No
BMP maintenance and inspection:		
a) Inspection of engineering controls performed (ea. week and after rainfall)?	☑	☐
b) Attach weekly inspection forms (BMP and stormwater forms)?	☑	☐
c) Note any correction of defects below?	☑	☐
d) Weekly stormwater form?	☑	☐

Comments: Bmps in good conditions
no faults or discharge

Dust maintenance and monitoring: PDR 1000: 2) .087 mg/m3
3) .067 mg/m3
Water truck used for dust suppression

(note if dust suppression is applied)

Jason W. Jones
Name / Signature

8-12-15
Date

CBMPP INSPECTION FIELD REPORT LOG

Contractor Name: TayLor Corp
Site Name: OU-3 Remedial Action Specific Area: PCB Cell Borrow Area
Site Location (City, County, State): Anniston, Calhoun County, Alabama

Date: 8-12-15

Weather Conditions: Temp: Min 68° Max 90°
Description (Sunny, Cloudy, Overcast, etc) CLEAR
Precipitation: .00 Inches

Work Performed Today (Indicate location and description of work performed and note any safety issues or deviations from the H&S plan):

CONTINUED WORK ON BORROW AREA
" " CHIPPING OPERATIONS

	Yes	No
BMP maintenance and inspection:		
a) Inspection of engineering controls performed (ea. week and after rainfall)?	☑	☐
b) Attach weekly inspection forms (BMP and **stormwater forms)?**	☑	☐
c) Note any correction of defects below?	☑	☐
d) Weekly stormwater form?	☑	☐

Comments: BMPS IN GOOD CONDITION. NO FAULTS OR DISCHARGE

Dust maintenance and monitoring: PDR 1000: 2) .043 mg/m3
3) .000 mg/m3
WATER TRUCK USED FOR DUST SUPPRESSION

(note if dust suppression is applied)

JASON W. JONES
Name / Signature

8-13-15
Date

CBMPP INSPECTION FIELD REPORT LOG

Contractor Name: Taylor Corp
Site Name: OU-3 Remedial Action Specific Area: PCB Cell Borrow Area
Site Location (City, County, State): Anniston, Calhoun County, Alabama

Date: 8-13-15

Weather Conditions: Temp: Min 63° Max 92°
Description (Sunny, Cloudy, Overcast, etc) CLEAR / T-STORM
Precipitation: ~~.00~~ .23 Inches

Work Performed Today (Indicate location and description of work performed and note any safety issues or deviations from the H&S plan):

Continued work on Borrow Area
" " Stripping operations

	Yes	No
BMP maintenance and inspection:		
a) Inspection of engineering controls performed (ea. week and after rainfall)?	☑	☐
b) Attach weekly inspection forms (BMP and stormwater forms)?	☑	☐
c) Note any correction of defects below?	☑	☐
d) Weekly stormwater form?	☑	☐

Comments: Bmp's in Good Condition
No Damages or Faults

Dust maintenance and monitoring: 2) .046 mg/m³
3) Not used due to Rain
Water Truck used for Dust Suppression
* Light Rain Fall Kept Roads Suppressed
(note if dust suppression is applied)

Jason W. Jones
Name / Signature

8-14-15
Date

CBMPP INSPECTION FIELD REPORT LOG

Contractor Name: Taylor Corp
Site Name: OU-3 Remedial Action Specific Area: PCB Cell Borrow Area
Site Location (City, County, State): Anniston, Calhoun County, Alabama

Date: 8-14-15

Weather Conditions: Temp: Min 73° Max 88°
Description (Sunny, Cloudy, Overcast, etc) RAIN
Precipitation: .10 Inches

Work Performed Today (Indicate location and description of work performed and note any safety issues or deviations from the H&S plan):

Continued working in Borrow Area
" " Chipping operations

	Yes	No
BMP maintenance and inspection:		
a) Inspection of engineering controls performed (ea. week and after rainfall)?	☑	☐
b) Attach weekly inspection forms (BMP and **stormwater forms**)?	☑	☐
c) Note any correction of defects below?	☑	☐
d) Weekly stormwater form?	☑	☐

Comments: Pumps in Good Condition.
No Damage, Faults or Discharge

Dust maintenance and monitoring: PDR 1000: 2) .069 mg/m3 Pulled Due to Rain
3) .029
Rain kept dust suppressed

(note if dust suppression is applied)

Jason W. Jones
Name / Signature

8-17-15
Date

STORMWATER INSPECITON AND MAINTENANCE REPORT FORM

Site Name: Anniston PCB Site, OU-3 Remedial Action Cover Systems

Site Location: Anniston, Calhoun County, Alabama

NPDES Permit Number: Not Applicable

Weekly Rainfall Summary:

Day:	Sun	Mon	Tues	Wed	Thurs	Fri	Sat
Date:	8-16-15	8-17-15	8-18-15	8-19-15	8-20-15	8-21-15	8-22-15
Rainfall:	T	.17	1.05	.04	.82	T	.00

Sampling Information:

- **Sample Type:** NA
- **Location:** NA
- **Analysis:** NA

Inspection Results:

- **Deficiencies or Required Maintenance:** none
- **Planned Corrective Action:** none
- **Corrective Action Schedule:** AS NEEDED
- **Other Comments:**

Signature 8-22-15 **Date**

CEMP INSPECTION FIELD REPORT LOG

Contractor Name: Taylor Corp
Site Name: OU-3 Remedial Action
Site Location (City, County, State): Anniston, Calhoun County, Alabama
Specific Area: PCB CELL

Date: 8-17-15

Weather Conditions: Temp: Min 73° Max 87°
Description (Sunny, Cloudy, Overcast, etc) ~~RAIN~~ T-STORMS
Precipitation: T Inches

Work Performed Today (Indicate location and description of work performed and note any safety issues or deviations from the H&S plan):

CONTINUED DEVELOPMENT OF BORROW AREA

BMP maintenance and inspection:	Yes	No
a) Inspection of engineering controls performed (ea. week and after rainfall)?	✓	
b) Attach weekly inspection forms (BMP and stormwater forms)?	✓	
c) Note any correction of defects below?	✓	
d) Weekly stormwater form?	✓	

Comments: BMP's GOOD CONDITION. NO DISCHARGE OR DAMAGE APPARENT

Dust maintenance and monitoring: 1) .002
2) .003 / AC1 .033
3) .031
WATER TRUCK

(note if dust suppression is applied)

JASON W. JOINER
Name / Signature

8-18-15
Date

CEMPP INSPECTION FIELD REPORT LOG

Contractor Name: Taylor Corp
Site Name: OU-3 Remedial Action Specific Area: PCB CELL
Site Location (City, County, State Anniston Calhoun County, Alabama

Date: 8-18-15

Weather Conditions: Temp: Min 73° Max 87°
Description (Sunny Cloudy Overcast etc) T-STORMS
Precipitation: 1.05 Inches

Work Performed Today (Indicate location and description of work performed and note any safety issues or deviations from the H&S plan):

CONTINUED DEVELOPMENT OF BORROW AREA

BMP maintenance and inspection:	Yes	No
a) Inspection of engineering controls performed (ea. week and after rainfall)?	✓	
b) Attach weekly inspection forms (BMP and stormwater forms)?	✓	
c) Note any correction of defects below?	✓	
d) Weekly stormwater form?	✓	

Comments: BMP's GOOD CONDITION. NO DISCHARGE OR DAMAGE APPARENT

Dust maintenance and monitoring: 1.) .000
WATER TRUCK 35 : 0423 0633

(note if dust suppression is applied)

JASON W. JOINER
Name / Signature

8-19-15
Date

CBMPP INSPECTION FIELD REPORT LOG

Contractor Name: Taylor Corp
Site Name: OU-3 Remedial Action Specific Area: PCB CELL
Site Location (City, County, State Anniston, Calhoun County, Alabama

Date: 8-19-15

Weather Conditions: Temp: Min 74° Max 89°
Description (Sunny, Cloudy, Overcast, etc) T-STORM
Precipitation: .04 Inches

Work Performed Today (Indicate location and description of work performed and note any safety issues or deviations from the H&S plan):

CONTINUED DEVELOPMENT OF BORROW AREA

BMP maintenance and inspection:	Yes	No
a. Inspection of engineering controls performed (ea. week and after rainfall)?	✓	
b. Attach weekly inspection forms (BMP and stormwater forms)?	✓	
c. Note any correction of defects below?	✓	
d. Weekly stormwater form?	✓	

Comments: BMP's GOOD CONDITION. NO DISCHARGE OR DAMAGE APPARENT

Dust maintenance and monitoring: 1.) .011 / AC .000
2.) .042
3.) .033

(note if dust suppression is applied)

JASON W. JOINER
Name / Signature

8-20-15
Date

CEMPP INSPECTION FIELD REPORT LOG

Contractor Name: Taylor Corp
Site Name: OU-3 Remedial Design
Site Location (City, County, State): Anniston, Calhoun County, Alabama
Specific Area: PCB CELL

Date: 8-20-15

Weather Conditions: Temp: Min 73° Max 88°
Description (Sunny, Cloudy, Overcast, etc.) T-Storms
Precipitation: .82 Inches

Work Performed Today (Indicate location and description of work performed and note any safety issues or deviations from the H&S plan):

CONTINUED DEVELOPMENT OF BORROW AREA

BMP maintenance and inspection:	Yes	No
a) Inspection of engineering controls performed (ea. week and after rainfall)?	✓	
b) Attach weekly inspection forms (BMP and stormwater forms)?	✓	
c) Note any correction of defects below?	✓	
d) Weekly stormwater form?	✓	

Comments: Bmp's Good Condition. No Discharge or Damage Apparent

Dust maintenance and monitoring: 1.) .031
2.) .015
3.) .000

(note if dust suppression is applied)

Jason W. Joiner
Name / Signature

8-21-15
Date

CBMPP INSPECTION FIELD REPORT LOG

Contractor Name: Taylor Corp
Site Name: OU-3 Remedial Action Specific Area: PCB CELL
Site Location (City, County, State Anniston Calhoun County, Alabama

Date: 8-21-15

Weather Conditions: Temp: Min 74° Max 90°
Description (Sunny Cloudy Overcast etc) Rain
Precipitation: T Inches

Work Performed Today (Indicate location and description of work performed and note any safety issues or deviations from the H&S plan):

CONTINUED DEVELOPMENT OF BORROW AREA

BMP maintenance and inspection:	Yes	No
a. Inspection of engineering controls performed (ea. week and after rainfall)?	✓	
b. Attach weekly inspection forms (BMP and stormwater forms)?	✓	
c. Note any correction of defects below?	✓	
d. Weekly stormwater form?	✓	

Comments: Bmp's Good Condition. No Discharge or Damage Apparent

Dust maintenance and monitoring: 1) .001
2) .024
3) .000

(note if dust suppression is applied)

Jason W. Joiner
Name / Signature

8-22-15
Date

STORMWATER INSPECITON AND MAINTENANCE REPORT FORM

Site Name: Anniston PCB Site, OU-3 Remedial Action Cover Systems

Site Location: Anniston, Calhoun County, Alabama

NPDES Permit Number: Not Applicable

Weekly Rainfall Summary:

Day:	Sun	Mon	Tues	Wed	Thurs	Fri	Sat
Date:	8-23-15	8-24-15	8-25-15	8-26-15	8-27-15	8-28-15	8-29-15
Rainfall:	1.04	.00	.00	.00	.00	.00	.51

Sampling Information:

- **Sample Type:** NA
- **Location:** NA
- **Analysis:** NA

Inspection Results:

- **Deficiencies or Required Maintenance:** NONE
- **Planned Corrective Action:** none
- **Corrective Action Schedule:** AS NEEDED
- **Other Comments:**

Signature _____ **Date** 8-30-15

CEMPP INSPECTION FIELD REPORT LOG

Contractor Name: Taylor Corp
Site Name: OU-3 Remedial Action
Site Location (City, County, State Anniston, Calhoun County, Alabama
Specific Area: PCB CELL

Date: 8-24-15

Weather Conditions: Temp: Min 69° Max 91°
Description (Sunny, Cloudy, Overcast, etc) CLOUDY
Precipitation: 0 Inches

Work Performed Today (Indicate location and description of work performed and note any safety issues or deviations from the H&S plan):

CONTINUED DEVELOPMENT OF BORROW AREA

BMP maintenance and inspection:	Yes	No
a. Inspection of engineering controls performed (ea. week and after rainfall)?	✓	
b. Attach weekly inspection forms (BMP and stormwater forms)?	✓	
c. Note any correction of defects below?	✓	
d. Weekly stormwater form?	✓	

Comments: BMPs GOOD CONDITION. NO DISCHARGE OR DAMAGE APPARENT

Dust maintenance and monitoring: 1.) .044
2.) .049
3) .008

(note if dust suppression is applied)

JASON W. JOINER
Name / Signature

8-25-15
Date

CEMPP INSPECTION FIELD REPORT LOG

Contractor Name: Taylor Corp
Site Name: OU-3 Remedial Action Specific Area: PCB CELL
Site Location (City, County, State Anniston Calhoun County, Alabama

Date: 8-25-15

Weather Conditions: Temp: Min 59° Max 83°
Description (Sunny, Cloudy, Overcast, etc) CLEAR
Precipitation: 0 Inches

Work Performed Today (Indicate location and description of work performed and note any safety issues or deviations from the H&S plan):

CONTINUED DEVELOPMENT OF BORROW AREA

BMP maintenance and inspection:	Yes	No
a. Inspection of engineering controls performed (ea. week and after rainfall)?	✓	
b. Attach weekly inspection forms (BMP and stormwater forms)?	✓	
c. Note any correction of defects below?	✓	
d. Weekly stormwater form?	✓	

Comments: Bmp's Good Condition. No Discharge or Damage Apparent

Dust maintenance and monitoring: 1) .012
2) .020
3) .000

(note if dust suppression is applied)

Jason W. Joiner
Name / Signature

8-26-15
Date

CBMPP INSPECTION FIELD REPORT LOG

Contractor Name: Taylor Corp
Site Name: OU-3 Remedial Action
Site Location (City, County, State): Anniston, Calhoun County, Alabama
Specific Area: PCB CELL

Date: 8-26-15

Weather Conditions: Temp: Min 59° Max 83°
Description (Sunny, Cloudy, Overcast, etc): CLEAR
Precipitation: 0 Inches

Work Performed Today (Indicate location and description of work performed and note any safety issues or deviations from the H&S plan):

CONTINUED DEVELOPMENT OF BORROW AREA

BMP maintenance and inspection:	Yes	No
a. Inspection of engineering controls performed (ea. week and after rainfall)?	✓	
b. Attach weekly inspection forms (BMP and stormwater forms)?	✓	
c. Note any correction of defects below?	✓	
d. Weekly stormwater form?	✓	

Comments: BMPs GOOD CONDITION. NO DISCHARGE OR DAMAGE APPARENT

Dust maintenance and monitoring: 1). 001
2). 021
3). 000

(note if dust suppression is applied)

JASON W. JOINER
Name / Signature

8-27-15
Date

CEMPP INSPECTION FIELD REPORT LOG

Contractor Name: Taylor Corp
Site Name: OU-3 Remedial Action Specific Area: PCB CELL
Site Location (City, County State Anniston Calhoun County, Alabama

Date: 8-27-15

Weather Conditions: Temp: Min 62° Max 88°
Description (Sunny Cloudy Overcast etc) SCATTERED CLOUDS
Precipitation: Ø Inches

Work Performed Today (Indicate location and description of work performed and note any safety issues or deviations from the H&S plan):

CONTINUED DEVELOPMENT OF BORROW AREA

BMP maintenance and inspection:	Yes	No
a. Inspection of engineering controls performed (ea. week and after rainfall)?	✓	
b. Attach weekly inspection forms (BMP and stormwater forms)?	✓	
c. Note any correction of defects below?	✓	
d. Weekly stormwater form?		

Comments: Bmp's Good Condition. No Discharge or Damage Apparent

Dust maintenance and monitoring: 1.) .011
2.) .003
3.) .044

(note if dust suppression is applied)

Jason W. Joiner
Name / Signature

8-28-15
Date

CEMP INSPECTION FIELD REPORT LOG

Contractor Name: Taylor Corp
Site Name: OU-3 Remedial Action
Site Location (City, County, State): Anniston, Calhoun County, Alabama
Specific Area: PCB CELL

Date: 8-28-15

Weather Conditions: Temp: Min 67° Max 87°
Description (Sunny, Cloudy, Overcast, etc.) CLEAR
Precipitation: Ø Inches

Work Performed Today (Indicate location and description of work performed and note any safety issues or deviations from the H&S plan):

CONTINUED DEVELOPMENT OF BORROW AREA

BMP maintenance and inspection:	Yes	No
a) Inspection of engineering controls performed (ea. week and after rainfall)?	✓	
b) Attach weekly inspection forms (BMP and stormwater forms)?	✓	
c) Note any correction of defects below?	✓	
d) Weekly stormwater form?	✓	

Comments: Bmp's Good Condition. No Discharge or Damage Apparent

Dust maintenance and monitoring: 1) .015
2) .000
3) .003

(note if dust suppression is applied)

Jason W. Joiner
Name / Signature

8-29-15
Date

STORMWATER INSPECITON AND MAINTENANCE REPORT FORM

Site Name: Anniston PCB Site, OU-3 Remedial Action Cover Systems

Site Location: Anniston, Calhoun County, Alabama

NPDES Permit Number: Not Applicable

Weekly Rainfall Summary:

Day:	Sun	Mon	Tues	Wed	Thurs	Fri	Sat
Date:	8/30/15	8/31/15	9/1/15	9/2/15	9/3/15	9/4/15	9/5/15
Rainfall:	.86	.00	0.00	0.00	0.02	0.00	0.77

Sampling Information:

- **Sample Type:** NA
- **Location:** NA
- **Analysis:** NA

Inspection Results:

- **Deficiencies or Required Maintenance:** NONE
- **Planned Corrective Action:** AS NEEDED
- **Corrective Action Schedule:** AS NEEDED
- **Other Comments:**

Signature 9/8/15 **Date**

STORMWATER INSPECITON AND MAINTENANCE REPORT FORM

Site Name: Anniston PCB Site, OU-3 Remedial Action Cover Systems

Site Location: Anniston, Calhoun County, Alabama

NPDES Permit Number: Not Applicable

Weekly Rainfall Summary:

Day:	Sun	Mon	Tues	Wed	Thurs	Fri	Sat
Date:			9/1/15	9/2/15	9/3/15	9/4/15	9/5/15
Rainfall:			ϕ	ϕ	.02	ϕ	.77

Sampling Information:

- **Sample Type:**
- **Location:**
- **Analysis:**

} NA

Inspection Results:

- **Deficiencies or Required Maintenance:** AS NEEDED
- **Planned Corrective Action:** AS NEEDED
- **Corrective Action Schedule:** AS NEEDED
- **Other Comments:** As needed

Signature 9/7/15 **Date**

CBMPP INSPECTION FIELD REPORT LOG

Contractor Name: TAYLOR CORP
Site Name: OU-3 Remedial Action Specific Area: PCB AREA
Site Location (City, County, State): Anniston, Calhoun County, Alabama
Date: ~~9/1/15~~ 9/1/15

Weather Conditions: Temp: Min 70° Max 80°
Description (Sunny, Cloudy, Overcast, etc) SCATTERED CLOUDS
Precipitation: 0 Inches

Work Performed Today (Indicate location and description of work performed and note any safety issues or deviations from the H&S plan):

CONTINUED DEVELOPMENT OF BORROW SOURCE

	Yes	No
BMP maintenance and inspection:		
a) Inspection of engineering controls performed (ea. week and after rainfall)?	☑	☐
b) Attach weekly inspection forms (BMP and stormwater forms)?	☐	☑
c) Note any correction of defects below?	☑	☐
d) Weekly stormwater form?	☐	☑

Comments: BMP'S IN GOOD CONDITION
NO DISCHARGE OR DAMAGE

Dust maintenance and monitoring: 1) .000 mg/m3
2) .001 mg m/s
3) .000 mg/m2
WATER TANCK

(note if dust suppression is applied)

JASON W. JONES
Name / Signature

9/2/15
Date

CBMPP INSPECTION FIELD REPORT LOG

Contractor Name: TAYLOR CORP
Site Name: OU-3 Remedial Action Specific Area: PCB CELL BORROW AREA
Site Location (City, County, State): Anniston, Calhoun County, Alabama
Date: 9/2/15

Weather Conditions: Temp: Min 71° Max 90
Description (Sunny, Cloudy, Overcast, etc) CLEAR
Precipitation: 0 Inches

Work Performed Today (Indicate location and description of work performed and note any safety issues or deviations from the H&S plan):

CONTINUED WORK ON BORROW AREA & PCB CELLS
INSTALLED MORE BMP ALONG SW CORNER OF BA.

	Yes	No
BMP maintenance and inspection:		
a) Inspection of engineering controls performed (ea. week and after rainfall)?	☑	☐
b) Attach weekly inspection forms (BMP and stormwater forms)?	☑	☐
c) Note any correction of defects below?	☑	☐
d) Weekly stormwater form?	☑	☐

Comments: BMPS IN GOOD WORKING CONDITION
NO DAMAGE OR DISCHARGE OBSERVED

Dust maintenance and monitoring: 1) .007 mg/m³
2) .001 mg/m³
3) .000 mg/m³
WATER TRUCK

(note if dust suppression is applied)

JASON W. JARVIS
Name / Signature

9/3/15
Date

CBMP INSPECTION FIELD REPORT LOG

Contractor Name: Taylor Corp
Site Name: OU-3 Remedial Action Specific Area: PCB CELL
Site Location (City, County, State): Anniston, Calhoun County, Alabama
Date: 9/3/15

Weather Conditions: Temp Min 71° Max 92°
Description (Sunny, Cloudy, Overcast, etc): ~~Sunny~~ T-STORMS
Precipitation: .02 Inches

Work Performed Today (Indicate location and description of work performed and note any safety issues or deviations from the H&S plan):

CONTINUED DEVELOPMENT OF BORROW AREA

	Yes	No
BMP maintenance and inspection		
a. Inspection of engineering controls performed (ea. week and after rainfall)?	✓	
b. Attach weekly inspection forms (BMP and stormwater forms)?	✓	
c. Note any correction of defects below	✓	
d. Weekly stormwater form?		

Comments: BMP's GOOD CONDITION. NO DISCHARGE OR DAMAGE APPARENT

Dust maintenance and monitoring: N/A WERE NOT PUT OUT DUE TO RAIN

(Note if dust suppression is applied)

Jason W. Joiner
Name / Signature

9/4/15
Date

CEMPP INSPECTION FIELD REPORT LOG

Contractor Name: Taylor Corp.
Site Name: OU-3 Remedial Action Specific Area: PCB CELL
Site Location (City, County, State): Anniston, Calhoun County, Alabama
Date: 9/4/15
Weather Conditions: Temp: Min 67° Max 94°
Description (Sunny Cloudy Overcast etc) Clear
Precipitation: 0 Inches

Work Performed Today (Indicate location and description of work performed and note any safety issues or deviations from the H&S plan):

CONTINUED DEVELOPMENT OF BORROW AREA

BMP maintenance and inspection:	Yes	No
a) Inspection of engineering controls performed (ea. week and after rainfall)?	☑	☐
b) Attach weekly inspection forms (BMP and stormwater forms)?	☑	☐
c) Note any correction of defects below?	☑	☐
d) Weekly stormwater form?	☑	☐

Comments: BMPs GOOD CONDITION. NO DISCHARGE OR DAMAGE APPARENT

Dust maintenance and monitoring: 1) .042 mg/m³
2) .093 mg/m³
3) .013 mg/m³
DUST CONTROL USED WATER TRUCK
(note if dust suppression is applied)

JASON W. JONES
Name / Signature

9/5/15
Date

STORMWATER INSPECITON AND MAINTENANCE REPORT FORM

Site Name: Anniston PCB Site, OU-3 Remedial Action Cover Systems

Site Location: Anniston, Calhoun County, Alabama

NPDES Permit Number: Not Applicable

Weekly Rainfall Summary:

Day:	Sun	Mon	Tues	Wed	Thurs	Fri	Sat
Date:	9/6/15	9/7/15	9/8/15	9/9/15	9/10/15	9/11/15	9/12/15
Rainfall:	TRACE	Ø	.02	.03	0.50	.92	Ø

Sampling Information:

- **Sample Type:** NA
- **Location:** NA
- **Analysis:** NA

Inspection Results:

- **Deficiencies or Required Maintenance:** NONE
- **Planned Corrective Action:** AS NEEDED
- **Corrective Action Schedule:** AS NEEDED
- **Other Comments:**

Signature 9/14/15 **Date**

CEMRP INSPECTION FIELD REPORT LOG

Contractor Name: Taylor [illegible]
Site Name: OU-3 Remedial Action
Specific Area: PCE CELL
Site Location (City, County, State): [illegible] Calhoun County, Alabama

Date: 9/8/15

Weather Conditions: Temp Min 70° Max 88°
Description (Sunny, Cloudy, Overcast, etc.): Rain
Precipitation: .02 Inches

Work Performed Today (Indicate location and description of work performed and note any safety issues or deviations from the H&S plan)

CONTINUED DEVELOPMENT OF BORROW AREA
BEGAN DIGGING IN AREA E
INSTALLED APPROX 50' OF TEMP SILT FENCE

BMP maintenance and inspection	Yes	No
a) Inspection of engineering controls performed (eal week and after rainfall)?	✓	
b) Attach weekly inspection forms (BMP and stormwater forms)?	✓	
c) Note any correction of defects below?	✓	
d) Weekly stormwater form?	✓	

Comments: BMP'S GOOD CONDITION. NO DISCHARGE OR DAMAGE APPARENT

Dust maintenance and monitoring: 1) .00 mg/m³
2) .001
3) .001

WATER
Truck

Note if dust suppression is applied

Jason W. Joiner [signature]
Name / Signature

9/9/15
Date

[illegible] INSPECTION FIELD REPORT LOG

Contractor Name: [illegible]
Site Name: OU-3 Remedial [illegible]
Site Location (City, County, State): [illegible] Calhoun County, Alabama
Specific Area: PCB CELL

Date: 9/9/15

Weather Conditions: Temp Min 72° Max 90°
Description (Sunny, Cloudy, Overcast, etc.): T-STORM
Precipitation: .03 inches

Work Performed Today (Indicate location and description of work performed and note any safety issues or deviations from the H&S plan)

CONTINUED DEVELOPMENT OF BORROW AREA
CONTINUED DIGGING FOOTER IN AREA E
INSTALLED APPROX 150' TEMP SILT FENCE AROUND AREA E

BMP maintenance and inspection	Yes	No
a) Inspection of engineering controls performed (eal week and after rainfall)?	✓	
b) Attach weekly inspection forms (BMP and stormwater forms)?	✓	
c) Note any correction of defects below?	✓	
d) Weekly stormwater form?	✓	

Comments: BMP'S GOOD CONDITION. NO DISCHARGE OR DAMAGE APPARENT

Dust maintenance and monitoring: 1) .008 mg/m3
2) .011
3) .001

Note if dust suppression is applied

Jason W. Joiner [signature]
Name / Signature

9/10/15
Date

[illegible] INSPECTION FIELD REPORT LOG

Contractor Name: [illegible]
Site Name: OU-3 Remedial [illegible]
Specific Area: PCB CELL
Site Location (City, County, State): [illegible] Calhoun County, Alabama

Date: 9/10/15

Weather Conditions: Temp Min 70° Max 85°
Description (Sunny, Cloudy, Overcast etc.): T-STORM
Precipitation: .50 Inches

Work Performed Today (Indicate location and description of work performed and note any safety issues or deviations from the H&S plan)

CONTINUED DEVELOPMENT OF BORROW AREA
CONTINUED DIGGING FOOTER AROUND AREA E
INSTALLED APPR. 50' OF TYPE B SILT FENCE

BMP maintenance and inspection	Yes	No
a) Inspection of engineering controls performed (eal week and after rainfall)?	✓	
b) Attach weekly inspection forms (BMP and stormwater forms)?	✓	
c) Note any correction of defects below?	✓	
d) Weekly stormwater form?	✓	

Comments: BMP'S GOOD CONDITION. NO DISCHARGE OR DAMAGE APPARENT

Dust maintenance and monitoring: 1.7 .001 mg/m³
WATER TRUCK 23/33 > NO METER DUE TO RAIN AS NEEDED

Note if dust suppression is applied

Jason W. Joiner [signature]
Name / Signature

9/11/15
Date

[illegible] INSPECTION FIELD REPORT LOG

Contractor Name: [illegible]
Site Name: OU-3 Remedial [illegible]
Specific Area: PCE CELL
Site Location (City, County, State): [illegible] Calhoun County, Alabama

Date: 9/11/15

Weather Conditions: Temp Min 67° Max 86°
Description (Sunny, Cloudy, Overcast): T-STORM
Precipitation: .92 inches

Work Performed Today (Indicate location and description of work performed and note any safety issues or deviations from the H&S plan)

CONTINUED DEVELOPMENT OF BORROW AREA
INSTALLED APPROX. 300' OF NEW SILT FENCE
GRASS MATE AND SEED INSTALLED ON WEST SIDE
OF RETENTION BASIN.
CONTINUED DIGGING IN AREA E. INSTALLED APPRX
100' OF TEMP SILT FENCE

BMP maintenance and inspection	Yes	No
a) Inspection of engineering controls performed (eal week and after rainfall)?	✓	
b) Attach weekly inspection forms (BMP and stormwater forms)?	✓	
c) Note any correction of defects below?	✓	
d) Weekly stormwater form?	✓	

Comments: Bmp's GOOD CONDITION. NO DISCHARGE
OR DAMAGE APPARENT
T

Dust maintenance and monitoring: 1). .012 mg m³
2). .052 mg m³
3). .029

Note if dust suppression is applied

Jason W. Joiner [signature]
Name / Signature

9/14/15
Date

STORMWATER INSPECITON AND MAINTENANCE REPORT FORM

Site Name: Anniston PCB Site, OU-3 Remedial Action Cover Systems

Site Location: Anniston, Calhoun County, Alabama

NPDES Permit Number: Not Applicable

Weekly Rainfall Summary:

Day:	Sun	Mon	Tues	Wed	Thurs	Fri	Sat
Date:	9/13	9/14	9/15	9/16	9/17	9/18	9/19
Rainfall:	∅	∅	∅	∅	∅	∅	∅

Sampling Information:

- **Sample Type:** nA
- **Location:** nA
- **Analysis:** nA

Inspection Results:

- **Deficiencies or Required Maintenance:** none
- **Planned Corrective Action:** AS needed
- **Corrective Action Schedule:** AS needed
- **Other Comments:** none

Signature _____ **Date** 9/22/15

[illegible] INSPECTION FIELD REPORT LOG

Contractor Name: [illegible]
Site Name: OU-3 Remedial [illegible]
Site Location (City, County, State): [illegible] Calhoun County, Alabama

Specific Area: PCB CELL / AREA E

Date: 9/14/15

Weather Conditions: Temp. Min. 50° Max. 80°
Description (Sunny, Cloudy, Overcast, etc.): CLEAR
Precipitation: Ø Inches

Work Performed Today (Indicate location and description of work performed and note any safety issues or deviations from the H&S plan)

CONTINUED DEVELOPMENT OF BORROW AREA
CONTINUED DIGGING FOOTER IN AREA E

BMP maintenance and inspection	Yes	No
a) Inspection of engineering controls performed (eal week and after rainfall)?	✓	
b) Attach weekly inspection forms (BMP and stormwater forms)?	✓	
c) Note any correction of defects below?	✓	
d) Weekly stormwater form?	✓	

Comments: BMP'S GOOD CONDITION. NO DISCHARGE OR DAMAGE APPARENT

Dust maintenance and monitoring: 1) 0.000 mg m³
2) 0.014 mg m³
3) 0.000 mg m³

WATER TRUCK

Note if dust suppression is applied

JASON W. JOINER [signature]
Name / Signature

9/15
Date

CBMPP INSPECTION FIELD REPORT LOG

Contractor Name: Taylor Corp
Site Name: OU-3 Remedial Action
Specific Area: PCB CELL / AREA E
Site Location (City, County, State): Anniston, Calhoun County, Alabama

Date: 9/15/15

Weather Conditions: Temp: Min 55° Max 81°
Description (Sunny, Cloudy, Overcast, etc) Clear
Precipitation: Ø Inches

Work Performed Today (Indicate location and description of work performed and note any safety issues or deviations from the H&S plan):

Continued Developing and Excavation of Borrow Area
Fill 16" Lift on PCB Cell
Continued Digging Footer in Area E

BMP maintenance and inspection:	Yes	No
a) Inspection of engineering controls performed (ea. week and after rainfall)?	☑	☐
b) Attach weekly inspection forms (BMP and stormwater forms)?	☑	☐
c) Note any correction of defects below?	☑	☐
d) Weekly stormwater form?	☑	☐

Comments: BMPs in Good Condition, No Discharge or Damage Apparent.

Dust maintenance and monitoring: 1). 009 mg/m³
2). 004
3). 002
Water Truck for Dust Suppression

(note if dust suppression is applied)

Name / Signature

9/16/15
Date

CBMPP INSPECTION FIELD REPORT LOG

Contractor Name: Taylor Corp
Site Name: OU-3 Remedial Action
Specific Area: PCB CELL / AREA E
Site Location (City, County, State): Anniston, Calhoun County, Alabama

Date: 9/16/15

Weather Conditions: Temp: Min 60° Max 82°
Description (Sunny, Cloudy, Overcast, etc) Clear
Precipitation: 0 Inches

Work Performed Today (Indicate location and description of work performed and note any safety issues or deviations from the H&S plan):

CONTINUED DEVELOPING AND EXCAVATION OF BORROW AREA
FILL 6" LIFT ON PCB CELL
CONTINUED FILL IN 6" LIFTS @ PCB CELL

BMP maintenance and inspection:	Yes	No
a) Inspection of engineering controls performed (ea. week and after rainfall)?	☑	☐
b) Attach weekly inspection forms (BMP and stormwater forms)?	☑	☐
c) Note any correction of defects below?	☑	☐
d) Weekly stormwater form?	☑	☐

Comments: BMPS IN GOOD CONDITION, NO DISCHARGE OR DAMAGE APPARENT.

Dust maintenance and monitoring: 1). 000 mg/m³
2). 026
3). 050
WATER TRUCK FOR DUST SUPPRESSION

(note if dust suppression is applied)

Name / Signature

Date

CBMPP INSPECTION FIELD REPORT LOG

Contractor Name: Taylor Corp
Site Name: OU-3 Remedial Action
Specific Area: PCB CELL / AREA E
Site Location (City, County, State): Anniston, Calhoun County, Alabama

Date: 9/17/15

Weather Conditions: Temp: Min 65° Max 84
Description (Sunny, Cloudy, Overcast, etc) Cloudy
Precipitation: 0 Inches

Work Performed Today (Indicate location and description of work performed and note any safety issues or deviations from the H&S plan):

CONTINUED DEVELOPING AND EXCAVATION OF BORROW AREA
FILL 6" LIFT ON PCB CELL
CONTINUED DIGGING FOOTER IN AREA E

	Yes	No
BMP maintenance and inspection:		
a) Inspection of engineering controls performed (ea. week and after rainfall)?	☑	☐
b) Attach weekly inspection forms (BMP and stormwater forms)?	☑	☐
c) Note any correction of defects below?	☑	☐
d) Weekly stormwater form?	☑	☐

Comments: BMPs IN GOOD CONDITION, NO DISCHARGE OR DAMAGE APPARENT.

Dust maintenance and monitoring: 1) .000 mg/m³
2) .065
3) .000
WATER TRUCK FOR DUST SUPPRESSION

(note if dust suppression is applied)

Name / Signature

9/18/15
Date

CBMPP INSPECTION FIELD REPORT LOG

Contractor Name: Taylor Corp
Site Name: OU-3 Remedial Action
Specific Area: PCB CELL / AREA E
Site Location (City, County, State): Anniston, Calhoun County, Alabama

Date: 9/18/15

Weather Conditions: Temp: Min 61° Max 87°
Description (Sunny, Cloudy, Overcast, etc) Cloudy
Precipitation: 0 Inches

Work Performed Today (Indicate location and description of work performed and note any safety issues or deviations from the H&S plan):

CONTINUED DEVELOPING AND EXCAVATION OF BORROW AREA
FILL 6" LIFT ON PCB CELL
CONTINUED DIGGING FOOTER IN AREA E

BMP maintenance and inspection:	Yes	No
a) Inspection of engineering controls performed (ea. week and after rainfall)?	☑	☐
b) Attach weekly inspection forms (BMP and stormwater forms)?	☑	☐
c) Note any correction of defects below?	☑	☐
d) Weekly stormwater form?	☑	☐

Comments: BMPs IN GOOD CONDITION, NO DISCHARGE OR DAMAGE APPARENT.

Dust maintenance and monitoring: 1). 001 mg/m³
2). 012
3). 000
WATER TRUCK FOR DUST SUPPRESSION

(note if dust suppression is applied)

Name / Signature

9/22/15
Date

STORMWATER INSPECITON AND MAINTENANCE REPORT FORM

Site Name: Anniston PCB Site, OU-3 Remedial Action Cover Systems

Site Location: Anniston, Calhoun County, Alabama

NPDES Permit Number: Not Applicable

Weekly Rainfall Summary:

Day:	Sun	Mon	Tues	Wed	Thurs	Fri	Sat
Date:	9/20/15	9/21/15	9/22/15	9/23/15	9/24/15	9/25/15	9/26/15
Rainfall:	Ø	.05"	Ø	Ø	.03"	.17"	Ø

Sampling Information:

- **Sample Type:** NA
- **Location:** NA
- **Analysis:** NA

Inspection Results:

- **Deficiencies or Required Maintenance:** AS NEEDED
- **Planned Corrective Action:** AS NEEDED
- **Corrective Action Schedule:** AS NEEDED
- **Other Comments:**

Signature **Date** 9/27/15

CBMPP INSPECTION FIELD REPORT LOG

Contractor Name: Taylor Corp
Site Name: OU-3 Remedial Action Specific Area: PCB CELL / AREA E
Site Location (City, County, State): Anniston, Calhoun County, Alabama

Date: 9/21/15

Weather Conditions: Temp: Min 65° Max 70°
Description (Sunny Cloudy Overcast etc) RAIN
Precipitation .05 Inches

Work Performed Today (Indicate location and description of work performed and note any safety issues or deviations from the H&S plan):

CONTINUED DEVELOPING AND EXCAVATION OF BORROW AREA
FILL 6" LIFT ON PCB CELL
CONTINUED WORK ON AREA A + E

BMP maintenance and inspection:	Yes	No
a) Inspection of engineering controls performed (ea. week and after rainfall)?	☑	☐
b) Attach weekly inspection forms (BMP and stormwater forms)?	☑	☐
c) Note any correction of defects below?	☑	☐
d) Weekly stormwater form?	☑	☐

Comments: BMPs IN GOOD CONDITION, NO DISCHARGE OR DAMAGE APPARENT.

Dust maintenance and monitoring: 1). 0 mg/m³
2). 0 mg/m³
3). 0 mg/m³
> METERS NOT PUT OUT DUE TO RAIN!

WATER TRUCK FOR DUST SUPPRESSION

(note if dust suppression is applied)

Name / Signature

9/22/15
Date

CBMPP INSPECTION FIELD REPORT LOG

Contractor Name: Taylor Corp
Site Name: OU-3 Remedial Action Specific Area: PCB CELL / AREA E
Site Location (City, County, State): Anniston, Calhoun County, Alabama

Date: 9/22/15

Weather Conditions: Temp Min 65° Max 83°
Description (Sunny Cloudy Overcast etc) PARTLY CLOUDY
Precipitation: 0 Inches

Work Performed Today (Indicate location and description of work performed and note any safety issues or deviations from the H&S plan):

CONTINUED DEVELOPING AND EXCAVATION OF BORROW AREA
FILL 6" LIFT ON PCB CELL
CONTINUED WORK ON AREA A + E

	Yes	No
BMP maintenance and inspection:		
a) Inspection of engineering controls performed (ea. week and after rainfall)?	☑	☐
b) Attach weekly inspection forms (BMP and stormwater forms)?	☑	☐
c) Note any correction of defects below?	☑	☐
d) Weekly stormwater form?	☑	☐

Comments: BMPs IN GOOD CONDITION, NO DISCHARGE OR DAMAGE APPARENT.

Dust maintenance and monitoring: 1). .000 mg/m³
2). .000 mg/m³
3). .006 mg/m³
WATER TRUCK FOR DUST SUPPRESSION

(note if dust suppression is applied)

Name / Signature

9/23/15
Date

CBMPP INSPECTION FIELD REPORT LOG

Contractor Name: Taylor Corp
Site Name: OU-3 Remedial Action Specific Area: PCB CELL / AREA E
Site Location (City, County, State): Anniston, Calhoun County, Alabama

Date: 9/23/15

Weather Conditions: Temp: Min 66° Max 85°
Description (Sunny Cloudy Overcast etc) SCATTERED CLOUD / RAIN
Precipitation: Trace Inches

Work Performed Today (Indicate location and description of work performed and note any safety issues or deviations from the H&S plan):

CONTINUED DEVELOPING AND EXCAVATION OF BORROW AREA
FILL 16" LIFT ON PCB CELL
CONTINUED WORK ON AREA A + E

BMP maintenance and inspection:	Yes	No
a) Inspection of engineering controls performed (ea. week and after rainfall)?	☑	☐
b) Attach weekly inspection forms (BMP and stormwater forms)?	☑	☐
c) Note any correction of defects below?	☑	☐
d) Weekly stormwater form?	☑	☐

Comments: BMPS IN GOOD CONDITION, NO DISCHARGE OR DAMAGE APPARENT.

Dust maintenance and monitoring: 1). .000 mg/m³
2). .003 mg/m³
3). .000 mg/m³
WATER TRUCK FOR DUST SUPPRESSION

(note if dust suppression is applied)

Name / Signature

9/24/15
Date

CBMPP INSPECTION FIELD REPORT LOG

Contractor Name: Taylor Corp
Site Name: OU-3 Remedial Action Specific Area: PCB CELL / AREA E
Site Location (City, County, State): Anniston, Calhoun County, Alabama

Date: 9/24/15

Weather Conditions: Temp: Min 62° Max 84°
Description (Sunny, Cloudy, Overcast, etc) Rain
Precipitation: .03 Inches

Work Performed Today (Indicate location and description of work performed and note any safety issues or deviations from the H&S plan):

CONTINUED DEVELOPING AND EXCAVATION OF BORROW AREA
FILL 6" LIFT ON PCB CELL
CONTINUED WORK ON AREA A + E

BMP maintenance and inspection:	Yes	No
a) Inspection of engineering controls performed (ea. week and after rainfall)?	☑	☐
b) Attach weekly inspection forms (BMP and stormwater forms)?	☑	☐
c) Note any correction of defects below?	☑	☐
d) Weekly stormwater form?	☑	☐

Comments: BMPs IN GOOD CONDITION, NO DISCHARGE OR DAMAGE APPARENT.

Dust maintenance and monitoring: 1). 0 mg/m³
2). 0 mg/m³
3). 0 mg/m³
> NOT USED Due to Rain.

WATER TRUCK FOR DUST SUPPRESSION

(note if dust suppression is applied)

Name / Signature

9/25/15
Date

CBMPP INSPECTION FIELD REPORT LOG

Contractor Name: Taylor Corp
Site Name: OU-3 Remedial Action Specific Area: PCB CELL / AREA E
Site Location (City, County, State): Anniston, Calhoun County, Alabama

Date: 9/25/15

Weather Conditions: Temp: Min 62° Max 70°
Description (Sunny Cloudy Overcast etc.) RAIN
Precipitation .17 Inches

Work Performed Today (Indicate location and description of work performed and note any safety issues or deviations from the H&S plan):

CONTINUED DEVELOPING AND EXCAVATION OF BORROW AREA
FILL 6" LIFT ON PCB CELL
CONTINUED WORK ON AREA A + E - 1ST HALF OF DAY
CONDUCTED SAFETY TRAINING

BMP maintenance and inspection:	Yes	No
a) Inspection of engineering controls performed (ea. week and after rainfall)?	☑	☐
b) Attach weekly inspection forms (BMP and stormwater forms)?	☑	☐
c) Note any correction of defects below?	☑	☐
d) Weekly stormwater form?	☑	☐

Comments: BMPS IN GOOD CONDITION, NO DISCHARGE OR DAMAGE APPARENT.

Dust maintenance and monitoring: 1): 0 mg/m³ NOT SET OUT DUE
2): 0 mg/m³
3): 0 mg/m³ TO RAIN!
WATER TRUCK FOR DUST SUPPRESSION

(note if dust suppression is applied)

Name / Signature

9/26/15
Date

CBMPP INSPECTION FIELD REPORT LOG

Contractor Name: TAYLOR CORP
Site Name: OU-3 Remedial Action
Specific Area: PCB CELL / AREA E
Site Location (City, County, State): Anniston, Calhoun County, Alabama

Date: 9/26/15

Weather Conditions: Temp. Min 66° Max 77°
Description (Sunny, Cloudy, Overcast, etc) RAIN
Precipitation .01 Inches

Work Performed Today (Indicate location and description of work performed and note any safety issues or deviations from the H&S plan):

CONTINUED DEVELOPING AND EXCAVATION OF BORROW AREA
FILL 6" LIFT ON PCB CELL
~~CONTINUED WORK ON AREA A + E~~

BMP maintenance and inspection:	Yes	No
a) Inspection of engineering controls performed (ea. week and after rainfall)?	☑	☐
b) Attach weekly inspection forms (BMP and stormwater forms)?	☑	☐
c) Note any correction of defects below?	☑	☐
d) Weekly stormwater form?	☑	☐

Comments: BMPS IN GOOD CONDITION, NO DISCHARGE OR DAMAGE APPARENT.

Dust maintenance and monitoring: 1). Ø mg/m³ NOT SET OUT
2). mg/m³
3). mg/m³ DUE TO RAIN
WATER TRUCK FOR DUST SUPPRESSION

(note if dust suppression is applied)

Name / Signature

9/27/15
Date

STORMWATER INSPECITON AND MAINTENANCE REPORT FORM

Site Name: Anniston PCB Site, OU-3 Remedial Action Cover Systems

Site Location: Anniston, Calhoun County, Alabama

NPDES Permit Number: Not Applicable

Weekly Rainfall Summary:

Day:	Sun	Mon	Tues	Wed	Thurs	Fri	Sat
Date:	9/27	9/28	9/29	9/30			
Rainfall:	0	.13	.02	0			

Sampling Information:

- **Sample Type:** NA
- **Location:**
- **Analysis:**

Inspection Results:

- **Deficiencies or Required Maintenance:**
- **Planned Corrective Action:** AS NEEDED
- **Corrective Action Schedule:**
- **Other Comments:**

Signature

9/30/15

Date

CBMPP INSPECTION FIELD REPORT LOG

Contractor Name: Taylor Corp
Site Name: OU-3 Remedial Action Specific Area: PCB CELLS / SOLUTIA PLANT AREA
Site Location (City, County, State): Anniston, Calhoun County, Alabama

Date: 9/29/15

Weather Conditions: Temp: Min 70° Max 85°
Description (Sunny, Cloudy, Overcast, etc) RAIN / T-STORMS
Precipitation: .02 Inches

Work Performed Today (Indicate location and description of work performed and note any safety issues or deviations from the H&S plan):

CONTINUED HAULING SOIL TO PCB CELLS FROM BORROW AREA

	Yes	No
BMP maintenance and inspection:		
a) Inspection of engineering controls performed (ea. week and after rainfall)?	☑	☐
b) Attach weekly inspection forms (BMP and stormwater forms)?	☑	☐
c) Note any correction of defects below?	☑	☐
d) Weekly stormwater form?	☑	☐

Comments: NO NOTICABLE DAMAGE OR DISCHARGE APPARENT.

Dust maintenance and monitoring: 1) 2) 3) X mg/m3 mg/m3 mg/m3 NO METERS OUT DUE TO T-STORMS

WATER TRUCK AS NEEDED

(note if dust suppression is applied)

Name / Signature

9/30/15
Date

CBMPP INSPECTION FIELD REPORT LOG

Contractor Name: Taylor Corp
Site Name: OU-3 Remedial Action Specific Area: PCB Cells / Solutia Plant Area
Site Location (City, County, State): Anniston, Calhoun County, Alabama

Date: 9/30/15

Weather Conditions: Temp: Min 69° Max 83°
Description (Sunny, Cloudy, Overcast, etc) Partly Cloudy
Precipitation: 0 Inches

Work Performed Today (Indicate location and description of work performed and note any safety issues or deviations from the H&S plan):

Continued Hauling Soil Too PCB Cells From Borrow Area

	Yes	No
BMP maintenance and inspection:		
a) Inspection of engineering controls performed (ea. week and after rainfall)?	☑	☐
b) Attach weekly inspection forms (BMP and stormwater forms)?	☑	☐
c) Note any correction of defects below?	☑	☐
d) Weekly stormwater form?	☑	☐

Comments: No noticable Damage or Discharge Apparent.

Dust maintenance and monitoring: 1) 0.00 mg/m3
2) 0.00 mg/m3
3) 0.00 mg/m3

Water Truck As needed

(note if dust suppression is applied)

Name / Signature

10/1/15
Date

STORMWATER INSPECITON AND MAINTENANCE REPORT FORM

Site Name: Anniston PCB Site, OU-3 Remedial Action Cover Systems

Site Location: Anniston, Calhoun County, Alabama

NPDES Permit Number: Not Applicable

Weekly Rainfall Summary:

Day:	Sun	Mon	Tues	Wed	Thurs	Fri	Sat
Date:	9/27/15	9/28/15	9/29/15	9/30/15	10/1/15	10/2/15	10/3/15
Rainfall:	T	.73	.02	.00	.31	.51	.05

Sampling Information:

- **Sample Type:** NA
- **Location:** NA
- **Analysis:** NA

Inspection Results:

- **Deficiencies or Required Maintenance:** AS NEEDED
- **Planned Corrective Action:** AS NEEDED
- **Corrective Action Schedule:** AS NEEDED
- **Other Comments:**

Signature **Date** 10/5/15

CBMPP INSPECTION FIELD REPORT LOG

Contractor Name: Taylor Corp
Site Name: OU-3 Remedial Action Specific Area: PCB CELLS / SOLUTIA PLANT AREA
Site Location (City, County, State): Anniston, Calhoun County, Alabama

Date: 10/1/15

Weather Conditions: Temp: Min 61° Max 69°
Description (Sunny, Cloudy, Overcast, etc) T-STORMS
Precipitation: .31 Inches

Work Performed Today (Indicate location and description of work performed and note any safety issues or deviations from the H&S plan):

Continued Hauling Soil Too PCB CELLS From Boron AREA

	Yes	No
BMP maintenance and inspection:		
a) Inspection of engineering controls performed (ea. week and after rainfall)?	☑	☐
b) Attach weekly inspection forms (BMP and stormwater forms)?	☑	☐
c) Note any correction of defects below?	☑	☐
d) Weekly stormwater form?	☑	☐

Comments: NO NOTICABLE DAMAGE OR DISCHARGE APPARENT.

Dust maintenance and monitoring: 1) mg/m3 2) mg/m3 3) mg/m3 X METERS NOT PUT OUT DUE TO T-STORMS

WATER TRUCK AS NEEDED

(note if dust suppression is applied)

Name / Signature

10/2/15
Date

CBMPP INSPECTION FIELD REPORT LOG

Contractor Name: Taylor Corp
Site Name: OU-3 Remedial Action Specific Area: PCB Cells / Solutia Plant Area
Site Location (City, County, State): Anniston, Calhoun County, Alabama

Date: 10/2/15

Weather Conditions: Temp: Min 61° Max 70°
Description (Sunny, Cloudy, Overcast, etc) Rain
Precipitation: .51 Inches

Work Performed Today (Indicate location and description of work performed and note any safety issues or deviations from the H&S plan):

Continued Hauling Soil Too PCB Cells From Borrow Area
Stripping Top Soil

BMP maintenance and inspection:	Yes	No
a) Inspection of engineering controls performed (ea. week and after rainfall)?	☑	☐
b) Attach weekly inspection forms (BMP and stormwater forms)?	☑	☐
c) Note any correction of defects below?	☑	☐
d) Weekly stormwater form?	☑	☐

Comments: NO NOTICABLE DAMAGE OR DISCHARGE APPARENT.

Dust maintenance and monitoring: 1) 2) 3) X mg/m3 mg/m3 mg/m3 NOT PUT OUT DUE TO RAIN
WATER TRUCK AS NEEDED
(note if dust suppression is applied)

Name / Signature

10/5/15
Date

STORMWATER INSPECITON AND MAINTENANCE REPORT FORM

Site Name: Anniston PCB Site, OU-3 Remedial Action Cover Systems

Site Location: Anniston, Calhoun County, Alabama

NPDES Permit Number: Not Applicable

Weekly Rainfall Summary:

Day:	Sun	Mon	Tues	Wed	Thurs	Fri	Sat
Date:	10/4/15	10/5/15	10/6/15	10/7/15	10/8/15	10/9/15	10/10/15
Rainfall:	.03	0	0	0	0	.14	.27

Sampling Information:

- **Sample Type:** NA
- **Location:** NA
- **Analysis:** NA

Inspection Results:

- **Deficiencies or Required Maintenance:** ND
- **Planned Corrective Action:** AS NEEDED
- **Corrective Action Schedule:** AS NEEDED
- **Other Comments:**

Signature

10/10/15
Date

CBMPP INSPECTION FIELD REPORT LOG

Contractor Name: Taylor Corp
Site Name: OU-3 Remedial Action Specific Area: PCB CELLS / SOLUTIA PLANT AREA
Site Location (City, County, State): Anniston, Calhoun County, Alabama

Date: 10/5/15

Weather Conditions: Temp: Min 64° Max 80°
Description (Sunny, Cloudy, Overcast, etc) Cloudy
Precipitation: 0 Inches

Work Performed Today (Indicate location and description of work performed and note any safety issues or deviations from the H&S plan):

Continued Hauling Soil Too PCB Cells From Borrow Area

	Yes	No
BMP maintenance and inspection:		
a) Inspection of engineering controls performed (ea. week and after rainfall)?	☑	☐
b) Attach weekly inspection forms (BMP and stormwater forms)?	☑	☐
c) Note any correction of defects below?	☑	☐
d) Weekly stormwater form?	☑	☐

Comments: NO NOTICABLE DAMAGE OR DISCHARGE APPARENT.

Dust maintenance and monitoring: 1) 0.000 mg/m3
2) 0.010 mg/m3
3) 0.040 mg/m3
WATER TRUCK AS NEEDED

(note if dust suppression is applied)

Name / Signature

10/6/15
Date

CBMPP INSPECTION FIELD REPORT LOG

Contractor Name: TAYLOR CORP
Site Name: OU-3 Remedial Action Specific Area: PCB CELLS / SOLUTIA PLANT AREA
Site Location (City, County, State): Anniston, Calhoun County, Alabama

Date: 10/6/15

Weather Conditions: Temp: Min 63° Max 83°
Description (Sunny, Cloudy, Overcast, etc) CLOUDY
Precipitation: Ø Inches

Work Performed Today (Indicate location and description of work performed and note any safety issues or deviations from the H&S plan):

CONTINUED HAULING SOIL TOO PCB CELLS FROM BORROW AREA

BMP maintenance and inspection:	Yes	No
a) Inspection of engineering controls performed (ea. week and after rainfall)?	☑	☐
b) Attach weekly inspection forms (BMP and stormwater forms)?	☑	☐
c) Note any correction of defects below?	☑	☐
d) Weekly stormwater form?	☑	☐

Comments: NO NOTICABLE DAMAGE OR DISCHARGE APPARENT.

Dust maintenance and monitoring: 1) 0.000 mg/m3
2) 0.001 mg/m3
3) 0.003 mg/m3

WATER TRUCK AS NEEDED

(note if dust suppression is applied)

Name / Signature

10/7/15
Date

CBMPP INSPECTION FIELD REPORT LOG

Contractor Name: Taylor Corp
Site Name: OU-3 Remedial Action Specific Area: PCB CELLS / SOLUTIA PLANT AREA
Site Location (City, County, State): Anniston, Calhoun County, Alabama

Date: 10/7/15

Weather Conditions: Temp: Min 61° Max 85°
Description (Sunny, Cloudy, Overcast, etc) CLOUDS
Precipitation: 0 Inches

Work Performed Today (Indicate location and description of work performed and note any safety issues or deviations from the H&S plan):

CONTINUED HAULING SOIL TOO PCB CELLS FROM BORROW AREA

	Yes	No
BMP maintenance and inspection:		
a) Inspection of engineering controls performed (ea. week and after rainfall)?	☑	☐
b) Attach weekly inspection forms (BMP and stormwater forms)?	☑	☐
c) Note any correction of defects below?	☑	☐
d) Weekly stormwater form?	☑	☐

Comments: NO NOTICABLE DAMAGE OR DISCHARGE APPARENT.

Dust maintenance and monitoring: 1) 0.00 mg/m3
2) 0.00 mg/m3
3) 0.00 mg/m3

WATER TRUCK AS NEEDED

(note if dust suppression is applied)

Name / Signature

10/8/15
Date

CBMPP INSPECTION FIELD REPORT LOG

Contractor Name: Taylor Corp
Site Name: OU-3 Remedial Action Specific Area: PCB CELLS / SOLUTIA PLANT AREA
Site Location (City, County, State): Anniston, Calhoun County, Alabama

Date: 10/8/15

Weather Conditions: Temp: Min 59° Max 85°
Description (Sunny, Cloudy, Overcast, etc) clear
Precipitation: 0 Inches

Work Performed Today (Indicate location and description of work performed and note any safety issues or deviations from the H&S plan):

Continued Hauling Soil Too PCB CELLS From Boron AREA

	Yes	No
BMP maintenance and inspection:		
a) Inspection of engineering controls performed (ea. week and after rainfall)?	☑	☐
b) Attach weekly inspection forms (BMP and stormwater forms)?	☑	☐
c) Note any correction of defects below?	☑	☐
d) Weekly stormwater form?	☑	☐

Comments: NO NOTICABLE DAMAGE OR DISCHARGE APPARENT.

Dust maintenance and monitoring: 1) 0.000 mg/m³
2) 0.001 mg/m³
3) mg/m³

WATER TRUCK AS NEEDED

(note if dust suppression is applied)

Name / Signature

10/8/15
Date

CBMPP INSPECTION FIELD REPORT LOG

Contractor Name: Taylor Corp
Site Name: OU-3 Remedial Action Specific Area: PCB CELLS / SOLUTIA PLANT AREA
Site Location (City, County, State): Anniston, Calhoun County, Alabama

Date: 10/9/15

Weather Conditions: Temp: Min 62° Max 83°
Description (Sunny, Cloudy, Overcast, etc) RAIN
Precipitation: .14 Inches

Work Performed Today (Indicate location and description of work performed and note any safety issues or deviations from the H&S plan):

CONTINUED HAULING SOIL TOO PCB CELLS FROM BORROW AREA

	Yes	No
BMP maintenance and inspection:		
a) Inspection of engineering controls performed (ea. week and after rainfall)?	☑	☐
b) Attach weekly inspection forms (BMP and stormwater forms)?	☑	☐
c) Note any correction of defects below?	☑	☐
d) Weekly stormwater form?	☑	☐

Comments: NO NOTICABLE DAMAGE OR DISCHARGE APPARENT.

Dust maintenance and monitoring: 1) mg/m3 2) mg/m3 3) mg/m3 NOT PUT OUT DUE TO RAIN

WATER TRUCK AS NEEDED

(note if dust suppression is applied)

Name / Signature

10/12/15
Date

STORMWATER INSPECITON AND MAINTENANCE REPORT FORM

Site Name: Anniston PCB Site, OU-3 Remedial Action Cover Systems

Site Location: Anniston, Calhoun County, Alabama

NPDES Permit Number: Not Applicable

Weekly Rainfall Summary:

Day:	Sun	Mon	Tues	Wed	Thurs	Fri	Sat
Date:	10/11	10/12	10/13	10/14	10/15	10/16	10/17
Rainfall:	0	0	.45	0	0	0	0

Sampling Information:

- **Sample Type:** NA
- **Location:** NA
- **Analysis:** NA

Inspection Results:

- **Deficiencies or Required Maintenance:** AS NEEDED
- **Planned Corrective Action:** AS NEEDED
- **Corrective Action Schedule:** AS NEEDED
- **Other Comments:**

Signature _____ **Date** 10/19/15

CBMPP INSPECTION FIELD REPORT LOG

Contractor Name: Taylor Corp
Site Name: OU-3 Remedial Action Specific Area: PCB CELLS / SOLUTIA PLANT AREA
Site Location (City, County, State): Anniston, Calhoun County, Alabama

Date: 10/12/15

Weather Conditions: Temp: Min 54 Max 79
Description (Sunny, Cloudy, Overcast, etc) CLEAR
Precipitation: 0 Inches

Work Performed Today (Indicate location and description of work performed and note any safety issues or deviations from the H&S plan):

CONTINUED HAULING SOIL TOO PCB CELLS FROM BORROW AREA

	Yes	No
BMP maintenance and inspection:		
a) Inspection of engineering controls performed (ea. week and after rainfall)?	☑	☐
b) Attach weekly inspection forms (BMP and stormwater forms)?	☑	☐
c) Note any correction of defects below?	☑	☐
d) Weekly stormwater form?	☑	☐

Comments: NO NOTICABLE DAMAGE OR DISCHARGE APPARENT.

Dust maintenance and monitoring: 1) 0.00 mg/m3
2) 0.02 mg/m3
3) 0.00 mg/m3
WATER TRUCK AS NEEDED
(note if dust suppression is applied)

Name / Signature

10/12/15
Date

CBMPP INSPECTION FIELD REPORT LOG

Contractor Name: Taylor Corp
Site Name: OU-3 Remedial Action
Site Location (City, County, State): Anniston, Calhoun County, Alabama
Specific Area: PCB CELLS / SOLUTIA PLANT AREA

Date: 10/13/15

Weather Conditions: Temp: Min 49 Max 82
Description (Sunny, Cloudy, Overcast, etc) T-STORM
Precipitation: .42 Inches

Work Performed Today (Indicate location and description of work performed and note any safety issues or deviations from the H&S plan):

CONTINUED HAULING SOIL TO PCB CELLS FROM BORROW AREA

BMP maintenance and inspection:	Yes	No
a) Inspection of engineering controls performed (ea. week and after rainfall)?	☑	☐
b) Attach weekly inspection forms (BMP and stormwater forms)?	☑	☐
c) Note any correction of defects below?	☑	☐
d) Weekly stormwater form?	☑	☐

Comments: NO NOTICABLE DAMAGE OR DISCHARGE APPARENT.

Dust maintenance and monitoring: 1) mg/m3 NO DATA DUE TO
2) mg/m3
3) mg/m3 RAIN
WATER TRUCK AS NEEDED

(note if dust suppression is applied)

Name / Signature

10/14/15
Date

CBMPP INSPECTION FIELD REPORT LOG

Contractor Name: Taylor Corp
Site Name: OU-3 Remedial Action
Specific Area: PCB CELLS / SOLUTIA PLANT AREA
Site Location (City, County, State): Anniston, Calhoun County, Alabama

Date: 10/14/15

Weather Conditions: Temp: Min 45 Max 80
Description (Sunny, Cloudy, Overcast, etc) FOG / CLEAR
Precipitation: 0 Inches

Work Performed Today (Indicate location and description of work performed and note any safety issues or deviations from the H&S plan):

CONTINUED HAULING SOIL TOO PCB CELLS FROM BORROW AREA

BMP maintenance and inspection:	Yes	No
a) Inspection of engineering controls performed (ea. week and after rainfall)?	☑	☐
b) Attach weekly inspection forms (BMP and stormwater forms)?	☑	☐
c) Note any correction of defects below?	☑	☐
d) Weekly stormwater form?	☑	☐

Comments: NO NOTICABLE DAMAGE OR DISCHARGE APPARENT.

Dust maintenance and monitoring: 1) 0.010 mg/m3
2) 0.002 mg/m3
3) 0.000 mg/m3
WATER TRUCK AS NEEDED

(note if dust suppression is applied)

Name / Signature

10/15/15
Date

CBMPP INSPECTION FIELD REPORT LOG

Contractor Name: Taylor Corp
Site Name: OU-3 Remedial Action
Specific Area: PCB CELLS / SOLUTIA PLANT AREA
Site Location (City, County, State): Anniston, Calhoun County, Alabama

Date: 10/15/15

Weather Conditions: Temp: Min 49 Max 84
Description (Sunny, Cloudy, Overcast, etc) CLEAR
Precipitation: 0 Inches

Work Performed Today (Indicate location and description of work performed and note any safety issues or deviations from the H&S plan):

CONTINUED HAULING SOIL TOO PCB CELLS FROM BOILER AREA

BMP maintenance and inspection:	Yes	No
a) Inspection of engineering controls performed (ea. week and after rainfall)?	☑	☐
b) Attach weekly inspection forms (BMP and stormwater forms)?	☑	☐
c) Note any correction of defects below?	☑	☐
d) Weekly stormwater form?	☑	☐

Comments: NO NOTICABLE DAMAGE OR DISCHARGE APPARENT.

Dust maintenance and monitoring: 1) 0.001 mg/m3
2) 0.003 mg/m3
3) 0.000 mg/m3
WATER TRUCK AS NEEDED

(note if dust suppression is applied)

Name / Signature

10/16/17
Date

CBMPP INSPECTION FIELD REPORT LOG

Contractor Name: Taylor Corp
Site Name: OU-3 Remedial Action
Specific Area: PCB CELLS / SOLUTIA PLANT ARE
Site Location (City, County, State): Anniston, Calhoun County, Alabama

Date: 10/16/17

Weather Conditions: Temp: Min 46 Max 77
Description (Sunny, Cloudy, Overcast, etc) CLEAR
Precipitation: 0 Inches

Work Performed Today (Indicate location and description of work performed and note any safety issues or deviations from the H&S plan):

CONTINUED HAULING SOIL TOO PCB CELLS FROM BORROW AREA

BMP maintenance and inspection:	Yes	No
a) Inspection of engineering controls performed (ea. week and after rainfall)?	☑	☐
b) Attach weekly inspection forms (BMP and stormwater forms)?	☑	☐
c) Note any correction of defects below?	☑	☐
d) Weekly stormwater form?	☑	☐

Comments: NO NOTICABLE DAMAGE OR DISCHARGE APPARENT.

Dust maintenance and monitoring: 1) 0.000 mg/m3
2) 0.012 mg/m3
3) 0.004 mg/m3
WATER TRUCK AS NEEDED

(note if dust suppression is applied)

Name / Signature

10/19/17
Date

STORMWATER INSPECITON AND MAINTENANCE REPORT FORM

Site Name: Anniston PCB Site, OU-3 Remedial Action Cover Systems

Site Location: Anniston, Calhoun County, Alabama

NPDES Permit Number: Not Applicable

Weekly Rainfall Summary:

Day:	Sun	Mon	Tues	Wed	Thurs	Fri	Sat
Date:	10/18	10/19	10/20	10/21	10/22	10/23	10/24
Rainfall:	Ø	Ø	Ø	Ø	Ø	Ø	Ø

Sampling Information:

- **Sample Type:** NA
- **Location:** NA
- **Analysis:** NA

Inspection Results:

- **Deficiencies or Required Maintenance:** AS NEEDED
- **Planned Corrective Action:** AS NEEDED
- **Corrective Action Schedule:** AS NEEDED
- **Other Comments:**

Signature **Date** 10/25/15

CBMPP INSPECTION FIELD REPORT LOG

Contractor Name: TAYLOR CORP
Site Name: OU-3 Remedial Action Specific Area: PCB CELL / AREA E
Site Location (City, County, State): Anniston, Calhoun County, Alabama

Date: 10/19/15

Weather Conditions: Temp. Min 39° Max 68°
Description (Sunny, Cloudy, Overcast, etc.) CLEAR
Precipitation: 0 Inches

Work Performed Today (Indicate location and description of work performed and note any safety issues or deviations from the H&S plan):

CONTINUED DEVELOPING AND EXCAVATION OF BORROW AREA
~~FILL TO LIFT~~ PCB CELL INSTALLING LINER & COMPOSITE
CONTINUED WORK ON AREA A + E

	Yes	No
BMP maintenance and inspection:		
a) Inspection of engineering controls performed (ea. week and after rainfall)?	☑	☐
b) Attach weekly inspection forms (BMP and stormwater forms)?	☑	☐
c) Note any correction of defects below?	☐	☐
d) Weekly stormwater form?	☑	☐

Comments: BMPS IN GOOD CONDITION, NO DISCHARGE OR DAMAGE APPARENT.

Dust maintenance and monitoring: 1). .031 mg/m³
2). .003 mg/m³
3). .037 mg/m³
WATER TRUCK FOR DUST SUPPRESSION

(note if dust suppression is applied)

Name / Signature

10/20/15
Date

CBMPP INSPECTION FIELD REPORT LOG

Contractor Name: Taylor Corp
Site Name: OU-3 Remedial Action Specific Area: PCB CELL / AREA E
Site Location (City, County. State): Anniston, Calhoun County. Alabama

Date: 10/20/15

Weather Conditions: Temp. Min 45 Max 75
Description (Sunny, Cloudy, Overcast, etc) CLEAR
Precipitation: 0 Inches

Work Performed Today (Indicate location and description of work performed and note any safety issues or deviations from the H&S plan):

CONTINUED DEVELOPING AND EXCAVATION OF BORROW AREA
~~FILL TO LIFT ON~~ PCB CELL INSTALLING LINER & COMPOSITE
CONTINUED WORK ON AREA A + E

BMP maintenance and inspection:	Yes	No
a) Inspection of engineering controls performed (ea. week and after rainfall)?	☑	☐
b) Attach weekly inspection forms (BMP and stormwater forms)?	☑	☐
c) Note any correction of defects below?	☑	☐
d) Weekly stormwater form?	☑	☐

Comments: BMPS IN GOOD CONDITION, NO DISCHARGE OR DAMAGE APPARENT.

Dust maintenance and monitoring: 1). 001 mg/m³
2). 023 mg/m³
3). 018 mg/m³
WATER TRUCK FOR DUST SUPPRESSION

(note if dust suppression is applied)

Name / Signature

10/21/15
Date

CBMPP INSPECTION FIELD REPORT LOG

Contractor Name: Taylor Corp
Site Name: OU-3 Remedial Action Specific Area: PCB CELL / AREA E
Site Location (City, County. State): Anniston, Calhoun County, Alabama

Date: 10/21/15

Weather Conditions: Temp: Min 49 Max 78
Description (Sunny, Cloudy, Overcast etc) Clear
Precipitation: Ø Inches

Work Performed Today (Indicate location and description of work performed and note any safety issues or deviations from the H&S plan):

CONTINUED DEVELOPING AND EXCAVATION OF BORROW AREA FILL TO 11' LIFT ON PCB CELL INSTALLING LINER & COMPOSITE CONTINUED WORK ON AREA A + E

BMP maintenance and inspection:	Yes	No
a) Inspection of engineering controls performed (ea. week and after rainfall)?	☑	☐
b) Attach weekly inspection forms (BMP and stormwater forms)?	☑	☐
c) Note any correction of defects below?	☐	☐
d) Weekly stormwater form?	☑	☐

Comments: BMPS IN GOOD CONDITION, NO DISCHARGE OR DAMAGE APPARENT.

Dust maintenance and monitoring: 1). .001 mg/m³
2). .000 mg/m³
3). .005 mg/m³
WATER TRUCK FOR DUST SUPPRESSION

(note if dust suppression is applied)

Name / Signature

10/22/15
Date

CBMPP INSPECTION FIELD REPORT LOG

Contractor Name: Taylor Corp
Site Name: OU-3 Remedial Action Specific Area: PCB CELL / AREA E
Site Location (City, County. State): Anniston, Calhoun County. Alabama

Date: 10/22/15

Weather Conditions: Temp: Min 50 Max 81
Description (Sunny, Cloudy, Overcast etc.) CLEAR
Precipitation. 0 Inches

Work Performed Today (Indicate location and description of work performed and note any safety issues or deviations from the H&S plan):

CONTINUED DEVELOPING AND EXCAVATION OF BORROW AREA FILL TO 1' LIFT ON PCB CELL INSTALLING LINER & COMPOSITE CONTINUED WORK ON AREA A + E

BMP maintenance and inspection:	Yes	No
a) Inspection of engineering controls performed (ea. week and after rainfall)?	☑	☐
b) Attach weekly inspection forms (BMP and stormwater forms)?	☑	☐
c) Note any correction of defects below?	☐	☐
d) Weekly stormwater form?	☑	☐

Comments: BMPS IN GOOD CONDITION, NO DISCHARGE OR DAMAGE APPARENT.

Dust maintenance and monitoring: 1). 000 mg/m³
2). 078 mg/m³
3). 013 mg/m³
WATER TRUCK FOR DUST SUPPRESSION

(note if dust suppression is applied)

Name / Signature

10/23/15
Date

CBMPP INSPECTION FIELD REPORT LOG

Contractor Name: Taylor Corp
Site Name: OU-3 Remedial Action Specific Area: PCB CELL / AREA E
Site Location (City, County. State): Anniston, Calhoun County. Alabama

Date: 10/23/15

Weather Conditions: Temp: Min 56 Max 83
Description (Sunny, Cloudy, Overcast etc.) Cloudy
Precipitation: 0 Inches

Work Performed Today (Indicate location and description of work performed and note any safety issues or deviations from the H&S plan):

CONTINUED DEVELOPING AND EXCAVATION OF BORROW AREA FILL TO 1' LIFT ~~on~~ PCB CELL INSTALLING LINER & COMPOSITE
CONTINUED WORK ON AREA A + E

	Yes	No
BMP maintenance and inspection:		
a) Inspection of engineering controls performed (ea. week and after rainfall)?	☑	☐
b) Attach weekly inspection forms (BMP and stormwater forms)?	☑	☐
c) Note any correction of defects below?	☐	☐
d) Weekly stormwater form?	☑	☐

Comments: BMPS IN GOOD CONDITION, NO DISCHARGE OR DAMAGE APPARENT.

Dust maintenance and monitoring: 1). 005 mg/m³
2). 023 mg/m³
3). 011 mg/m³
WATER TRUCK FOR DUST SUPPRESSION

(note if dust suppression is applied)

Name / Signature

10/24/15
Date

STORMWATER INSPECITON AND MAINTENANCE REPORT FORM

Site Name: Anniston PCB Site, OU-3 Remedial Action Cover Systems

Site Location: Anniston, Calhoun County, Alabama

NPDES Permit Number: Not Applicable

Weekly Rainfall Summary:

Day:	Sun	Mon	Tues	Wed	Thurs	Fri	Sat
Date:	10/25	10/26	10/27	10/28	10/29	10/30	10/31
Rainfall:	.09	.89	.19	.10	.02	0	1.21

Sampling Information:

- **Sample Type:** n/a
- **Location:** n/a
- **Analysis:** n/a

Inspection Results:

- **Deficiencies or Required Maintenance:** none apparent
- **Planned Corrective Action:** as needed
- **Corrective Action Schedule:** as needed
- **Other Comments:**

Signature

10/31/15
Date

CBMPP INSPECTION FIELD REPORT LOG

Contractor Name: Taylor Corp
Site Name: OU-3 Remedial Action Specific Area: PCB CELL / AREA E
Site Location (City, County. State): Anniston, Calhoun County. Alabama

Date: 10/26/15

Weather Conditions: Temp. Min 57° Max 70°
Description (Sunny, Cloudy, Overcast, etc): RAIN
Precipitation. .89 Inches

Work Performed Today (Indicate location and description of work performed and note any safety issues or deviations from the H&S plan):

CONTINUED DEVELOPING AND EXCAVATION OF BORROW AREA ~~FILL TO LIFT ON~~ PCB CELL INSTALLING LINER & COMPOSITE
CONTINUED WORK ON AREA A + E

	Yes	No
BMP maintenance and inspection:		
a) Inspection of engineering controls performed (ea. week and after rainfall)?	☑	☐
b) Attach weekly inspection forms (BMP and stormwater forms)?	☑	☐
c) Note any correction of defects below?	☑	☐
d) Weekly stormwater form?	☑	☐

Comments: BMPs IN GOOD CONDITION, NO DISCHARGE OR DAMAGE APPARENT.
INSPECTED BY JASON JOINER & TYLER HOLLIS

Dust maintenance and monitoring: 1). > mg/m³ 2). > mg/m³ 3). > mg/m³ NO DATA DUE TO RAIN
WATER TRUCK FOR DUST SUPPRESSION

(note if dust suppression is applied)

Name / Signature

10/27/15
Date

CBMPP INSPECTION FIELD REPORT LOG

Contractor Name: Taylor Corp
Site Name: OU-3 Remedial Action Specific Area: PCB CELL / AREA E
Site Location (City, County. State): Anniston, Calhoun County. Alabama

Date: 10/27/15

Weather Conditions: Temp. Min 54° Max 62°
Description (Sunny, Cloudy, Overcast, etc): RAIN
Precipitation: .19 Inches

Work Performed Today (Indicate location and description of work performed and note any safety issues or deviations from the H&S plan):

~~CONTINUED DEVELOPING AND EXCAVATION OF BORROW AREA FILL TO BE LEFT ON PCB CELL INSTALLING LINER & COMPOSITE~~ DID NOT WORK ON PCB CELLS OR BA.
CONTINUED WORK ON AREA A + E

	Yes	No
BMP maintenance and inspection:		
a) Inspection of engineering controls performed (ea. week and after rainfall)?	☑	☐
b) Attach weekly inspection forms (BMP and stormwater forms)?	☑	☐
c) Note any correction of defects below?	☑	☐
d) Weekly stormwater form?	☑	☐

Comments: BMPS IN GOOD CONDITION, NO DISCHARGE OR DAMAGE APPARENT.
AREA'S AROUND PCB CELLS GOOD NO DAMAGE
DISCHARGE PIPE ON WEST SIDE OF BORROW AREA CLEAR
INSPECTED BY JASON JOINER AND TYLER WOLLIS

Dust maintenance and monitoring: 1). mg/m³
2). mg/m³
3). mg/m³
WATER TRUCK FOR DUST SUPPRESSION

(note if dust suppression is applied)

Name / Signature

10/28/15
Date

CBMPP INSPECTION FIELD REPORT LOG

Contractor Name: TAYLOR CORP
Site Name: OU-3 Remedial Action Specific Area: PCB CELL / AREA E
Site Location (City, County. State): Anniston, Calhoun County. Alabama

Date: 10/20/15

Weather Conditions: Temp: Min 55° Max 76°
Description (Sunny, Cloudy, Overcast, etc): RAIN
Precipitation: .10 Inches

Work Performed Today (Indicate location and description of work performed and note any safety issues or deviations from the H&S plan):

CONTINUED DEVELOPING AND EXCAVATION OF BORROW AREA
~~FILL TO 11' LIFT ON~~ PCB CELL INSTALLING LINER & COMPOSITE
CONTINUED WORK ON AREA A + E

BMP maintenance and inspection:	Yes	No
a) Inspection of engineering controls performed (ea. week and after rainfall)?	☑	☐
b) Attach weekly inspection forms (BMP and stormwater forms)?	☑	☐
c) Note any correction of defects below?	☐	☐
d) Weekly stormwater form?	☑	☐

Comments: BMPS IN GOOD CONDITION, NO DISCHARGE OR DAMAGE APPARENT.

Dust maintenance and monitoring: 1): mg/m³ 2): mg/m³ 3): mg/m³ NOT USED DUE TO RAIN
WATER TRUCK FOR DUST SUPPRESSION

(note if dust suppression is applied)

Name / Signature Date

CBMPP INSPECTION FIELD REPORT LOG

Contractor Name: TAYLOR CORP
Site Name: OU-3 Remedial Action Specific Area: PCB CELL / AREA E
Site Location (City, County. State): Anniston, Calhoun County. Alabama

Date: 10/29/15

Weather Conditions: Temp. Min 46° Max 72°
Description (Sunny, Cloudy, Overcast, etc.) RAIN
Precipitation: .02 Inches

Work Performed Today (Indicate location and description of work performed and note any safety issues or deviations from the H&S plan):

CONTINUED DEVELOPING AND EXCAVATION OF BORROW AREA FILL TO LIFT ON PCB CELL INSTALLING LINER & COMPOSITE
CONTINUED WORK ON AREA A + E

	Yes	No
BMP maintenance and inspection:		
a) Inspection of engineering controls performed (ea. week and after rainfall)?	☑	☐
b) Attach weekly inspection forms (BMP and stormwater forms)?	☑	☐
c) Note any correction of defects below?	☑	☐
d) Weekly stormwater form?	☑	☐

Comments: BMPS IN GOOD CONDITION, NO DISCHARGE OR DAMAGE APPARENT.

Dust maintenance and monitoring: 1): mg/m³ 2): mg/m³ 3): mg/m³ NOT DATA DUE TO RAIN
WATER TRUCK FOR DUST SUPPRESSION

(note if dust suppression is applied)

Name / Signature

10/30/15
Date

CBMPP INSPECTION FIELD REPORT LOG

Contractor Name: TAYLOR Corp
Site Name: OU-3 Remedial Action Specific Area: PCB CELL / AREA E
Site Location (City, County. State): Anniston, Calhoun County. Alabama

Date: 10/30/15

Weather Conditions: Temp: Min 42 Max 71
Description (Sunny, Cloudy, Overcast etc): RAIN
Precipitation: .00 Inches

Work Performed Today (Indicate location and description of work performed and note any safety issues or deviations from the H&S plan):

CONTINUED DEVELOPING AND EXCAVATION OF BORROW AREA FILL TO LIFT ~~on~~ PCB CELL INSTALLING LINER & COMPOSITE
CONTINUED WORK ON AREA A + E

BMP maintenance and inspection:	Yes	No
a) Inspection of engineering controls performed (ea. week and after rainfall)?	☑	☐
b) Attach weekly inspection forms (BMP and stormwater forms)?	☑	☐
c) Note any correction of defects below?	☑	☐
d) Weekly stormwater form?	☑	☐

Comments: BMPS IN GOOD CONDITION, NO DISCHARGE OR DAMAGE APPARENT.

Dust maintenance and monitoring: 1). > mg/m³ 2). > mg/m³ 3). > mg/m³ NO DATA DUE TO RAIN

WATER TRUCK FOR DUST SUPPRESSION

(note if dust suppression is applied)

Name / Signature

10/30/15
Date

CBMPP INSPECTION FIELD REPORT LOG

Contractor Name: Taylor Corp
Site Name: OU-3 Remedial Action Specific Area: PCB Cell / Borrow Area
Site Location (City, County, State): Anniston, Calhoun County, Alabama

Date: 10/31/15 Weather Conditions: Temp: Min 51° Max 67°
Description (Sunny, Cloudy, Overcast, etc) Rain
Precipitation: 1.21 Inches

Work Performed Today (Indicate location and description of work performed and note any safety issues or deviations from the H&S plan):

Screen Soil in Borrow Area for Stock Pile

	Yes	No
BMP maintenance and inspection:		
a) Inspection of engineering controls performed (ea. week and after rainfall)?	☑	☐
b) Attach weekly inspection forms (BMP and stormwater forms)?	☑	☐
c) Note any correction of defects below?	☑	☐
d) Weekly stormwater form?	☑	☐

Comments: BMP's in Good Condition. No Damage or Repairs needed at this time Rain Began Apprx. 1830.

Some Discharge From Borrow Area Basin. Sediment Pond in Good Condition. ~~SEE~~ Water Discharge Relitively Clear Low Visable Turbitity.

SEE ~~ATTACHED~~ Photo's

Dust maintenance and monitoring:

n/a

(note if dust suppression is applied)

Jason L Joiner
Name / Signature

~~12/31~~ 11/1/15
Date











STORMWATER INSPECITON AND MAINTENANCE REPORT FORM

Site Name: Anniston PCB Site, OU-3 Remedial Action Cover Systems

Site Location: Anniston, Calhoun County, Alabama

NPDES Permit Number: Not Applicable

Weekly Rainfall Summary:

Day:	Sun	Mon	Tues	Wed	Thurs	Fri	Sat
Date:	NOV. 1 2015	NOV. 2 2015	NOV. 3 2015	NOV. 4 2015	NOV 5. 2015	NOV. 6 2015	NOV. 7 2015
Rainfall:	.25	.26	.00	.00	.00	.39	3.30

Sampling Information:

- **Sample Type:** NA
- **Location:** NA
- **Analysis:** NA

Inspection Results:

- **Deficiencies or Required Maintenance:**

- **Planned Corrective Action:** AS NEEDED

- **Corrective Action Schedule:** AS NEEDED

- **Other Comments:** SEE ATTACHED DAILY BMP REPORT

Signature _____ **Date** 11/16/15

CBMPP INSPECTION FIELD REPORT LOG

Contractor Name: TAYLOR CORP
Site Name: OU-3 Remedial Action
Specific Area: AREA A, E, C+O, BORROW + PCB CELL
Site Location (City, County, State): Anniston, Calhoun County, Alabama

Date: 11/1/15

Weather Conditions: Temp: Min 62° Max 67°
Description (Sunny, Cloudy, Overcast, etc) RAIN
Precipitation: .25 Inches

Work Performed Today (Indicate location and description of work performed and note any safety issues or deviations from the H&S plan):

NO WORK

BMP maintenance and inspection:

	Yes	No
a) Inspection of engineering controls performed (ea. week and after rainfall)?	☑	☐
b) Attach weekly inspection forms (BMP and stormwater forms)?	☑	☐
c) Note any correction of defects below?	☑	☐
d) Weekly stormwater form?	☑	☐

Comments: NO WORK PERFORMED / OFF DAY

Dust maintenance and monitoring:

NA

(note if dust suppression is applied)

Jason M Jones
Name / Signature

11/2/15
Date

CBMPP INSPECTION FIELD REPORT LOG

Contractor Name: Taylor Corp
Site Name: OU-3 Remedial Action Specific Area: Area C&D, Area A
Site Location (City, County, State): Anniston, Calhoun County, Alabama

Date: 11/2/15

Weather Conditions: Temp: Min 64 Max 73
Description (Sunny, Cloudy, Overcast, etc) Rain
Precipitation: .26 Inches

Work Performed Today (Indicate location and description of work performed and note any safety issues or deviations from the H&S plan):

Grading DGA on Area C+D and installing silt fence Area A - Remove and repair PIV's, Forming for concrete

BMP maintenance and inspection:	Yes	No
a) Inspection of engineering controls performed (ea. week and after rainfall)?	☑	☐
b) Attach weekly inspection forms (BMP and stormwater forms)?	☑	☐
c) Note any correction of defects below?	☑	☐
d) Weekly stormwater form?	☑	☐

Comments: Bmp's in good condition no damage or discharge

Dust maintenance and monitoring: NA Due to Rain

(note if dust suppression is applied)

Jason McJunkin
Name / Signature

11/3/15
Date

CBMPP INSPECTION FIELD REPORT LOG

Contractor Name: T.C.
Site Name: OU-3 Remedial Action Specific Area: AREA C+D, AREA A+E
Site Location (City, County, State): Anniston, Calhoun County, Alabama

Date: 11/3/15

Weather Conditions: Temp: Min 65 Max 76
Description (Sunny, Cloudy, Overcast, etc) Cloudy
Precipitation: .00 Inches

Work Performed Today (Indicate location and description of work performed and note any safety issues or deviations from the H&S plan):

GRADING AREA C+D
INSTALLING FORMS FOR AREA A+E
PIV REPLACEMENT AREA

BMP maintenance and inspection:	Yes	No
a) Inspection of engineering controls performed (ea. week and after rainfall)?	☑	☐
b) Attach weekly inspection forms (BMP and stormwater forms)?	☑	☐
c) Note any correction of defects below?	☑	☐
d) Weekly stormwater form?	☑	☐

Comments: BMP's IN GOOD CONDITION IN ALL AREAS
NO DAMAGE OR DISCHARGE

Dust maintenance and monitoring: 1) .00 mg/m³
2) .00 mg/m³
3) .00 mg/m³
GROUND STILL WET FROM RAIN

(note if dust suppression is applied)

JASON W. JOINER
Name / Signature

11/4/15
Date

CBMPP INSPECTION FIELD REPORT LOG

Contractor Name: TL.
Site Name: OU-3 Remedial Action
Specific Area: C&D, A & E, Borrow Area
Site Location (City, County, State): Anniston, Calhoun County, Alabama

Date: 11/5/15

Weather Conditions: Temp: Min 66° Max 78°
Description (Sunny, Cloudy, Overcast, etc) Cloudy
Precipitation: .00 Inches

Work Performed Today (Indicate location and description of work performed and note any safety issues or deviations from the H&S plan):

C&D - Grading Area for Prep
A - Pouring Concrete and Installing Forms / PIV Installation
E - Forms & Rebar for Retaining Wall
Borrow Area - Screen & Stockpile Soil

BMP maintenance and inspection:	Yes	No
a) Inspection of engineering controls performed (ea. week and after rainfall)?	☑	☐
b) Attach weekly inspection forms (BMP and stormwater forms)?	☑	☐
c) Note any correction of defects below?	☑	☐
d) Weekly stormwater form?	☑	☐

Comments: No Apparent Damage or Discharge on any of the BMP's

Dust maintenance and monitoring: 1) .00 2) .01 3) 0.02 > mg/m³
Water Truck As needed

(note if dust suppression is applied)

Jason W. Joyner
Name / Signature

11/06/15
Date

CBMPP INSPECTION FIELD REPORT LOG

Contractor Name: TL.
Site Name: OU-3 Remedial Action
Specific Area: C&D, A & E, Borrow Area
Site Location (City, County, State): Anniston, Calhoun County, Alabama

Date: 11/6/15

Weather Conditions: Temp: Min 66° Max 86°
Description (Sunny, Cloudy, Overcast, etc) Cloudy / T Storms
Precipitation: .00 Inches

Work Performed Today (Indicate location and description of work performed and note any safety issues or deviations from the H&S plan):

C&D - Grading Area for Prep
A - Pouring Concrete and Installing Forms / PIV Installation
E - Forms & Rebar for Retaining Wall
Borrow Area - Screen & Stockpile Soil

BMP maintenance and inspection:	Yes	No
a) Inspection of engineering controls performed (ea. week and after rainfall)?	☑	☐
b) Attach weekly inspection forms (BMP and stormwater forms)?	☑	☐
c) Note any correction of defects below?	☑	☐
d) Weekly stormwater form?	☑	☐

Comments: No Apparent Damage or Discharge on any of the BMP's

Dust maintenance and monitoring: [redacted] > [redacted]? No Data Due to Rain
Water Truck As needed

(note if dust suppression is applied)

Jason W. Joyner
Name / Signature

11/9/15
Date

STORMWATER INSPECITON AND MAINTENANCE REPORT FORM

Site Name: Anniston PCB Site, OU-3 Remedial Action Cover Systems

Site Location: Anniston, Calhoun County, Alabama

NPDES Permit Number: Not Applicable

Weekly Rainfall Summary:

Day:	Sun	Mon	Tues	Wed	Thurs	Fri	Sat
Date:	11/8/15	11/9/15	11/10/15	11/12/15	11/12/15	11/13/15	11/14/15
Rainfall:	.35"	.46"	.00"	.00"	.03"	.00	.00

Sampling Information:

- **Sample Type:** NA
- **Location:** NA
- **Analysis:** NA

Inspection Results:

- **Deficiencies or Required Maintenance:** REPAIRS MADE ON 11/10/15 DUE TO HEAVY RAINFALL FROM 11-6-15 — 11/9/15
- **Planned Corrective Action:** SEE ATTACHED BMP REPORT
- **Corrective Action Schedule:** AS NEEDED
- **Other Comments:**

Signature _____ Date 11/9/15

CBMPP INSPECTION FIELD REPORT LOG

Contractor Name: T.C.
Site Name: OU-3 Remedial Action
Specific Area: C+D
Site Location (City, County, State): Anniston, Calhoun County, Alabama

Date: 11/9/15

Weather Conditions: Temp: Min 49 Max 55
Description (Sunny, Cloudy, Overcast, etc) T-Storms
Precipitation: _____ Inches

Work Performed Today (Indicate location and description of work performed and note any safety issues or deviations from the H&S plan):

GRADING IN C+D

BMP maintenance and inspection:	Yes	No
a) Inspection of engineering controls performed (ea. week and after rainfall)?	☑	☐
b) Attach weekly inspection forms (BMP and stormwater forms)?	☑	☐
c) Note any correction of defects below?	☑	☐
d) Weekly stormwater form?	☑	☐

Comments: BMPS IN NEED OF REPAIR SOME DISCHARGE AND DAMAGE IN PCB CELL AREA. BORROW AREA HAD MINOR DISCHARGE AND REPAIRS NEEDED. C+D HAD SOME DAMAGE TO SILT FENCE

Dust maintenance and monitoring: NO DATA

(note if dust suppression is applied)

Jason Vaughn
Name / Signature

11/9/15
Date

















CBMPP INSPECTION FIELD REPORT LOG

Contractor Name: TC
Site Name: OU-3 Remedial Action
Specific Area: C+D
Site Location (City, County, State): Anniston, Calhoun County, Alabama

Date: 11/10/15

Weather Conditions: Temp: Min 62° Max 71°
Description (Sunny, Cloudy, Overcast, etc) Rain
Precipitation: .04 Inches

Work Performed Today (Indicate location and description of work performed and note any safety issues or deviations from the H&S plan):

CONTINUED GRADING & PUTTING DOWN GEO CELLS

BMP maintenance and inspection:	Yes	No
a) Inspection of engineering controls performed (ea. week and after rainfall)?	☑	☐
b) Attach weekly inspection forms (BMP and stormwater forms)?	☑	☐
c) Note any correction of defects below?	☑	☐
d) Weekly stormwater form?	☑	☐

Comments: ALL BMP'S REPAIRED AND/OR REPLACED IN BORROW AREA AND PCB CELLS

Dust maintenance and monitoring: > NO MONITORING DUE TO RAIN

(note if dust suppression is applied)

Jason L. Jones
Name / Signature

11/11/15
Date

CBMPP INSPECTION FIELD REPORT LOG

Contractor Name: T.L.
Site Name: OU-3 Remedial Action
Specific Area: C&D, A & E, Borrow Area
Site Location (City, County, State): Anniston, Calhoun County, Alabama

Date: 11/11/15

Weather Conditions: Temp: Min 57° Max 74°
Description (Sunny, Cloudy, Overcast, etc) Cloudy / Fog
Precipitation: .00 Inches

Work Performed Today (Indicate location and description of work performed and note any safety issues or deviations from the H&S plan):

C&D - Grading Area for Prep
A - Pouring Concrete and Installing Forms,
E - Forms & Rebar for Retaing Wall
Borrow Area - Screen & Stockpile Soil

BMP maintenance and inspection:	Yes	No
a) Inspection of engineering controls performed (ea. week and after rainfall)?	☑	☐
b) Attach weekly inspection forms (BMP and stormwater forms)?	☑	☐
c) Note any correction of defects below?	☑	☐
d) Weekly stormwater form?	☒	☐

Comments: No Apparent Damage or Discharge on any of the BMP's

Dust maintenance and monitoring: 1) .00 2) .01 3) 0.02 > mg/m³
Water Truck As needed

(note if dust suppression is applied)

Jason W. Jones
Name / Signature

11/12/15
Date

CBMPP INSPECTION FIELD REPORT LOG

Contractor Name: TC
Site Name: OU-3 Remedial Action
Specific Area: C+D / Burrow Area / PCB Cells
Site Location (City, County, State): Anniston, Calhoun County, Alabama

Date: 11/12/15

Weather Conditions: Temp: Min 71° Max 71°
Description (Sunny, Cloudy, Overcast, etc) RAIN
Precipitation: .03 Inches

Work Performed Today (Indicate location and description of work performed and note any safety issues or deviations from the H&S plan):

CONTINUED GRADING IN AREA C+D
INSPECTED BMPS

BMP maintenance and inspection:	Yes	No
a) Inspection of engineering controls performed (ea. week and after rainfall)?	☑	☐
b) Attach weekly inspection forms (BMP and stormwater forms)?	☑	☐
c) Note any correction of defects below?	☑	☐
d) Weekly stormwater form?	☑	☐

Comments: BMPS IN GOOD CONDITION, NO APPARENT DAMAGE OR DISCHARGE. SEDIMENT POND HAD LITTLE DISCHARGE VERY CLEAR

Dust maintenance and monitoring: NO MONITORING DUE TO RAIN

(note if dust suppression is applied)

Jason W Joiner
Name / Signature

11/13/15
Date

CBMPP INSPECTION FIELD REPORT LOG

Contractor Name: TC
Site Name: OU-3 Remedial Action
Site Location (City, County, State): Anniston, Calhoun County, Alabama
Specific Area: C+D, Borrow Area

Date: 11/13/15

Weather Conditions: Temp: Min 35 Max 65°
Description (Sunny, Cloudy, Overcast, etc) Clear
Precipitation: 0.00 Inches

Work Performed Today (Indicate location and description of work performed and note any safety issues or deviations from the H&S plan):

CONTINUED INSTALLING GEOCELLS + GRADING IN AREA C+D
BORROW AREA BEING WORKED TO DRY OUT STOCK PILE SOIL
HAULED BACK OF SITE

BMP maintenance and inspection:

	Yes	No
a) Inspection of engineering controls performed (ea. week and after rainfall)?	☑	☐
b) Attach weekly inspection forms (BMP and stormwater forms)?	☑	☐
c) Note any correction of defects below?	☑	☐
d) Weekly stormwater form?	☑	☐

Comments: BMP's IN GOOD CONDITION. NO DAMAGE OR DISCHARGE APPARENT

Dust maintenance and monitoring: 1) 000 2) 005 3) 007 mg/m³

WATER TRUCK USED FOR DUST CONTROL

(note if dust suppression is applied)

Jason W. Jowers
Name / Signature

11/14/15
Date

STORMWATER INSPECITON AND MAINTENANCE REPORT FORM

Site Name: Anniston PCB Site, OU-3 Remedial Action Cover Systems

Site Location: Anniston, Calhoun County, Alabama

NPDES Permit Number: Not Applicable

Weekly Rainfall Summary:

Day:	Sun	Mon	Tues	Wed	Thurs	Fri	Sat
Date:	11-15-15	11-16-15	11-17-15	11-18-15	11-19-15	11-20-15	11-21-15
Rainfall:	Ø	Ø	Ø	1.86	Ø	Ø	Ø

Sampling Information: N/A

- **Sample Type:**
- **Location:**
- **Analysis:**

Inspection Results:

- **Deficiencies or Required Maintenance:** Deficient Parts to Screen/Wrecker Tank
- **Planned Corrective Action:** Fix Screen
- **Corrective Action Schedule:** As Soon as possible
- **Other Comments:** Safety Meeting for all Machine operators

Signature 11-22-15 **Date**

CBMPP INSPECTION FIELD REPORT LOG

Contractor Name: TALOR CORP
Site Name: OU-3 Remedial Action
Site Location (City, County, State): Anniston, Calhoun County, Alabama
Specific Area: BORROW AREA, PCB CELL, C+D

Date: 11-14-15

Weather Conditions: Temp: Min 30° Max 63°
Description (Sunny, Cloudy, Overcast, etc) SUNNY
Precipitation: 0.00 Inches

Work Performed Today (Indicate location and description of work performed and note any safety issues or deviations from the H&S plan):

BORROW AREA - SCREEN DOWN
PCB CELLS - GRADING DONE TO PREP OUT EXCAVATION OF REMAINING
C+D - NOT WORKED

BMP maintenance and Inspection:

	Yes	No
a) Inspection of engineering controls performed (ea. week and after rainfall)?	☑	☐
b) Attach weekly inspection forms (BMP and stormwater forms)?	☑	☐
c) Note any correction of defects below?	☑	☐
d) Weekly stormwater form?	☑	☐

Comments: NO DAMAGE OR DISCHARGE. BMPS IN GOOD CONDITION. REPAIR MADE AS NEEDED.

Dust maintenance and monitoring: WEEKEND / NO MONITORS
WATER TRUCK USED FOR DUST SUPRESSION ON AS NEED BASES
(note if dust suppression is applied)

JASON W. JOINER
Name / Signature

11-15-15
Date

CBMPP INSPECTION FIELD REPORT LOG

Contractor Name: TALOR Corp
Site Name: OU-3 Remedial Action
Site Location (City, County, State): Anniston, Calhoun County, Alabama
Specific Area: Borrow Area, PCB Cell, C+D

Date: 11-15-15

Weather Conditions: Temp: Min 34° Max 59°
Description (Sunny, Cloudy, Overcast, etc) Sunny
Precipitation: 0.00 Inches

Work Performed Today (Indicate location and description of work performed and note any safety issues or deviations from the H&S plan):

Borrow Area - Screen Down
PCB Cells - Continued Roadwork / Put More Plastic and Sandbags Down
C+D - N/A

BMP maintenance and inspection:

	Yes	No
a) Inspection of engineering controls performed (ea. week and after rainfall)?	☑	☐
b) Attach weekly inspection forms (BMP and stormwater forms)?	☑	☐
c) Note any correction of defects below?	☑	☐
d) Weekly stormwater form?	☑	☐

Comments: No damage or discharge. Bmps in good condition. Repair made as needed.

Dust maintenance and monitoring: Weekend / N1 Monitors
Water truck used for dust supression on as need bases
(note if dust suppression is applied)

Jason W. Joiner
Name / Signature

11-16-15
Date

CBMPP INSPECTION FIELD REPORT LOG

Contractor Name: TALOR CORP
Site Name: OU-3 Remedial Action
Site Location (City, County, State): Anniston, Calhoun County, Alabama
Specific Area: BORROW AREA, PCB CELL, C+D

Date: 11-16-15

Weather Conditions: Temp: Min 45 Max 72
Description (Sunny, Cloudy, Overcast, etc) SUNNY
Precipitation: 0.00 Inches

Work Performed Today (Indicate location and description of work performed and note any safety issues or deviations from the H&S plan):

BORROW AREA - SCREEN DIRT, HAULED SOIL to PCB CELLS
PCB CELLS - RECEIVED HAULED SOIL, SPREAD AS NEEDED
C+D -

BMP maintenance and inspection:

	Yes	No
a) Inspection of engineering controls performed (ea. week and after rainfall)?	☑	☐
b) Attach weekly inspection forms (BMP and stormwater forms)?	☑	☐
c) Note any correction of defects below?	☑	☐
d) Weekly stormwater form?	☑	☐

Comments: NO DAMAGE OR DISCHARGE. BMPS IN GOOD CONDITION. REPAIR MADE AS NEEDED.

Dust maintenance and monitoring: 1 0.005 2 0.060 3 0.011

WATER TRUCK USED FOR DUST SUPRESSION ON AS NEED BASES

(note if dust suppression is applied)

JASON W. JOINER [signature]
Name / Signature

11-17-15
Date

CBMPP INSPECTION FIELD REPORT LOG

Contractor Name: TALOR Corp
Site Name: OU-3 Remedial Action
Site Location (City, County, State): Anniston, Calhoun County, Alabama
Specific Area: Borrow Area, PCB Cell, C+D

Date: 11-17-15

Weather Conditions: Temp: Min 57° Max 73°
Description (Sunny, Cloudy, Overcast, etc)
Precipitation: _____ Inches

Work Performed Today (Indicate location and description of work performed and note any safety issues or deviations from the H&S plan):

Borrow Area - Shut Down Due to Truck Wreck Incident
PCB Cells - N/A
C+D - N/A

BMP maintenance and inspection:

	Yes	No
a) Inspection of engineering controls performed (ea. week and after rainfall)?	☑	☐
b) Attach weekly inspection forms (BMP and stormwater forms)?	☑	☐
c) Note any correction of defects below?	☑	☐
d) Weekly stormwater form?	☑	☐

Comments: No Damage or Discharge. Bmps in Good Condition. Repair made as needed.

Dust maintenance and monitoring: Monitor 3 - 0.016

Water Truck used for Dust Supression on as need Bases

(note if dust suppression is applied)

Jason W. Joiner
Name / Signature

11-17-15
Date

CBMPP INSPECTION FIELD REPORT LOG

Contractor Name: TALOR Corp
Site Name: OU-3 Remedial Action
Site Location (City, County, State): Anniston, Calhoun County, Alabama
Specific Area: Borrow Area, PCB Cell, C+D

Date: 11-18-15

Weather Conditions: Temp: Min 53 Max 73
Description (Sunny, Cloudy, Overcast, etc) Cloudy
Precipitation: 1.86 Inches

Work Performed Today (Indicate location and description of work performed and note any safety issues or deviations from the H&S plan):

Borrow Area –
PCB Cells – } Shut down due to inclement rain event
C+D –

BMP maintenance and inspection:

	Yes	No
a) Inspection of engineering controls performed (ea. week and after rainfall)?	☑	☐
b) Attach weekly inspection forms (BMP and stormwater forms)?	☑	☐
c) Note any correction of defects below?	☑	☐
d) Weekly stormwater form?	☑	☐

Comments: No damage or discharge. Bmps in good condition. Repair made as needed.

Dust maintenance and monitoring: Not used
Water truck used for dust suppression on as need bases
(note if dust suppression is applied)

Jason W. Joiner
Name / Signature

11-19-15
Date

CBMPP INSPECTION FIELD REPORT LOG

Contractor Name: TALOR Corp
Site Name: OU-3 Remedial Action
Site Location (City, County, State): Anniston, Calhoun County, Alabama
Specific Area: Borrow Area, PCB Cell, C+D

Date: 11-19-15

Weather Conditions: Temp: Min 45 Max 69°
Description (Sunny, Cloudy, Overcast, etc) OVERCAST
Precipitation: 0.00 Inches

Work Performed Today (Indicate location and description of work performed and note any safety issues or deviations from the H&S plan):

Borrow Area -
PCB Cells - SHUT DOWN DUE TO TRUCK INCIDENT
C+D -

BMP maintenance and inspection:	Yes	No
a) Inspection of engineering controls performed (ea. week and after rainfall)?	☑	☐
b) Attach weekly inspection forms (BMP and stormwater forms)?	☑	☐
c) Note any correction of defects below?	☑	☐
d) Weekly stormwater form?	☑	☐

Comments: No damage or discharge. Bmps in good condition. Repair made as needed.

Dust maintenance and monitoring: None used
Water truck used for dust supression on as need bases
(note if dust suppression is applied)

Jason W. Joiner
Name / Signature

11-20-15
Date

CBMPP INSPECTION FIELD REPORT LOG

Contractor Name: TALOR Corp
Site Name: OU-3 Remedial Action
Site Location (City, County, State): Anniston, Calhoun County, Alabama
Specific Area: Borrow Area, PCB Cell, C+D

Date: 11-20-15

Weather Conditions: Temp: Min 41 Max 67
Description (Sunny, Cloudy, Overcast, etc) SUNNY
Precipitation: 0.00 Inches

Work Performed Today (Indicate location and description of work performed and note any safety issues or deviations from the H&S plan):

Borrow Area - Screened Dirt, Hauled Soil to PCB Cells For process
PCB Cells - Continued to Relieve Soil, Spread and Capped Areas that needed it
C+D - N/A

BMP maintenance and inspection:

	Yes	No
a) Inspection of engineering controls performed (ea. week and after rainfall)?	☑	☐
b) Attach weekly inspection forms (BMP and stormwater forms)?	☑	☐
c) Note any correction of defects below?	☑	☐
d) Weekly stormwater form?	☑	☐

Comments: No Damage or Discharge. Bmps in Good Condition. Repair made as needed.

Dust maintenance and monitoring: None used
Water Truck used for Dust Supression on as need Bases
(note if dust suppression is applied)

Jason W. Joiner
Name / Signature

11-21-15
Date

CBMPP INSPECTION FIELD REPORT LOG

Contractor Name: TALOR Corp
Site Name: OU-3 Remedial Action
Site Location (City, County, State): Anniston, Calhoun County, Alabama
Specific Area: Borrow Area, PCB Cell, C+D
Date: 11-21-15

Weather Conditions: Temp: Min 44° Max 68°
Description (Sunny, Cloudy, Overcast, etc) Sunny
Precipitation: 0.00 Inches

Work Performed Today (Indicate location and description of work performed and note any safety issues or deviations from the H&S plan):

Borrow Area - Screened Dirt, Hauled Soil to PCB Cells
PCB Cells - Received Soil, Spread as needed / Put More Mulch Down
C+D -

BMP maintenance and inspection:

	Yes	No
a) Inspection of engineering controls performed (ea. week and after rainfall)?	☑	☐
b) Attach weekly inspection forms (BMP and stormwater forms)?	☑	☐
c) Note any correction of defects below?	☑	☐
d) Weekly stormwater form?	☑	☐

Comments: No damage or discharge. BMPs in good condition. Repair made as needed.

Dust maintenance and monitoring: None used
Water truck used for dust suppression on as need bases
(note if dust suppression is applied)

Jason W. Joiner
Name / Signature

11-22-15
Date

STORMWATER INSPECITON AND MAINTENANCE REPORT FORM

Site Name: Anniston PCB Site, OU-3 Remedial Action Cover Systems

Site Location: Anniston, Calhoun County, Alabama

NPDES Permit Number: Not Applicable

Weekly Rainfall Summary:

Day:	Sun	Mon	Tues	Wed	Thurs	Fri	Sat
Date:	11/22	11/23	11/24	11/25	11/26	11/27	11/28
Rainfall:	Ø	Ø	Ø	Ø	Ø	Ø	Ø

Sampling Information:

- **Sample Type:** NA
- **Location:** NA
- **Analysis:** NA

Inspection Results:

- **Deficiencies or Required Maintenance:** AS NEEDED
- **Planned Corrective Action:** AS NEEDED
- **Corrective Action Schedule:** AS NEEDED
- **Other Comments:** AS NEED

Signature

11/29/15
Date

CBMPP INSPECTION FIELD REPORT LOG

Contractor Name: Taylor Corp
Site Name: OU-3 Remedial Action
Site Location (City, County, State): Anniston, Calhoun County, Alabama
Specific Area: PCB CELLS / SOLUTIA PLANT AREA

Date: 11/22/15

Weather Conditions: Temp: Min 32° Max 50
Description (Sunny, Cloudy, Overcast, etc) Rain
Precipitation: 0 Inches

Work Performed Today (Indicate location and description of work performed and note any safety issues or deviations from the H&S plan):

CONTINUED HAULING SOIL TOO PCB CELLS FROM BORROW AREA SCREENING DIRT

BMP maintenance and inspection:	Yes	No
a) Inspection of engineering controls performed (ea. week and after rainfall)?	☑	☐
b) Attach weekly inspection forms (BMP and stormwater forms)?	☑	☐
c) Note any correction of defects below?	☑	☐
d) Weekly stormwater form?	☑	☐

Comments: NO NOTICABLE DAMAGE OR DISCHARGE APPARENT.

Dust maintenance and monitoring: 1) 2) 3) 0 mg/m3 mg/m3 mg/m3 DIDN'T USE DUE TO WEATHER

WATER TRUCK AS NEEDED

(note if dust suppression is applied)

Name / Signature

11/23/15
Date

CBMPP INSPECTION FIELD REPORT LOG

Contractor Name: Taylor Corp
Site Name: OU-3 Remedial Action
Site Location (City, County, State): Anniston, Calhoun County, Alabama
Specific Area: PCB CELLS / SOLUTIA PLANT AREA

Date: 11/23/15

Weather Conditions: Temp: Min 26° Max 56°
Description (Sunny, Cloudy, Overcast, etc) Sunny
Precipitation: 0 Inches

Work Performed Today (Indicate location and description of work performed and note any safety issues or deviations from the H&S plan):

Continued Hauling Soil Too PCB Cells From Borrow Area
Excess Dirt

BMP maintenance and inspection:	Yes	No
a) Inspection of engineering controls performed (ea. week and after rainfall)?	☑	☐
b) Attach weekly inspection forms (BMP and stormwater forms)?	☑	☐
c) Note any correction of defects below?	☑	☐
d) Weekly stormwater form?	☑	☐

Comments: NO NOTICABLE DAMAGE OR DISCHARGE APPARENT.

Dust maintenance and monitoring: 1) .010 mg/m3
2) .000 mg/m3
3) .003 mg/m3

WATER TRUCK AS NEEDED

(note if dust suppression is applied)

Name / Signature

11/24/15
Date

CBMPP INSPECTION FIELD REPORT LOG

Contractor Name: Taylor Corp
Site Name: OU-3 Remedial Action
Site Location (City, County, State): Anniston, Calhoun County, Alabama
Specific Area: PCB CELLS / SOLUTIA PLANT AREA

Date: 11/24/15

Weather Conditions: Temp: Min 30° Max 61°
Description (Sunny, Cloudy, Overcast, etc) CLEAR
Precipitation: 0 Inches

Work Performed Today (Indicate location and description of work performed and note any safety issues or deviations from the H&S plan):

CONTINUED HAULING SOIL TOO PCB CELLS FROM BORROW AREA

BMP maintenance and inspection:

	Yes	No
a) Inspection of engineering controls performed (ea. week and after rainfall)?	☑	☐
b) Attach weekly inspection forms (BMP and stormwater forms)?	☑	☐
c) Note any correction of defects below?	☑	☐
d) Weekly stormwater form?	☑	☐

Comments: NO NOTICABLE DAMAGE OR DISCHARGE APPARENT.

Dust maintenance and monitoring: 1) .021 mg/m3
2) .004 mg/m3
3) .004 mg/m3

WATER TRUCK AS NEEDED

(note if dust suppression is applied)

Name / Signature

11/25/15
Date

CBMPP INSPECTION FIELD REPORT LOG

Contractor Name: TC
Site Name: OU-3 Remedial Action
Specific Area: PCB CELLS / BORROW AREA
Site Location (City, County, State): Anniston, Calhoun County, Alabama

Date: 11/25/15

Weather Conditions: Temp: Min 37° Max 66°
Description (Sunny, Cloudy, Overcast, etc) ~~CLEAR~~ RAIN
Precipitation: T Inches

Work Performed Today (Indicate location and description of work performed and note any safety issues or deviations from the H&S plan):

SCREENED DIRT

BMP maintenance and inspection:	Yes	No
a) Inspection of engineering controls performed (ea. week and after rainfall)?	☑	☐
b) Attach weekly inspection forms (BMP and stormwater forms)?	☑	☐
c) Note any correction of defects below?	☑	☐
d) Weekly stormwater form?	☑	☐

Comments: NO NOTICABLE DAMAGE OR DISCHARGE MADE SURE BMP'S WERE IN PLACE AND SOUND FOR SHUT DOWN FOR THANKSGIVING HOLLIDAY

Dust maintenance and monitoring: NO DATA DUE TO WEATHER

(note if dust suppression is applied)

Name / Signature
JASON W. JOINER

11/25/15
Date

STORMWATER INSPECITON AND MAINTENANCE REPORT FORM

Site Name: Anniston PCB Site, OU-3 Remedial Action Cover Systems

Site Location: Anniston, Calhoun County, Alabama

NPDES Permit Number: Not Applicable

Weekly Rainfall Summary:

Day:	Sun	Mon	Tues	Wed	Thurs	Fri	Sat
Date:	11-29-15	11-30-15	12-1-15	12-2-15	12-3-15	12-4-15	12-5-15
Rainfall:	.16	.10	1.06	.73	.01	.00	.00

Sampling Information:

- **Sample Type:**
- **Location:**
- **Analysis:**

NA

Inspection Results:

- **Deficiencies or Required Maintenance:** AS NEEDED
- **Planned Corrective Action:** AS NEEDED
- **Corrective Action Schedule:** AS NEEDED
- **Other Comments:**

Signature 12-6-15 **Date**

CBMPP INSPECTION FIELD REPORT LOG

Contractor Name: TC
Site Name: OU-3 Remedial Action
Specific Area: PCB CELLS, BORROW AREA, C+D
Site Location (City, County, State): Anniston, Calhoun County, Alabama

Date: 11-30-15

Weather Conditions: Temp: Min 60° Max 75
Description (Sunny, Cloudy, Overcast, etc) RAIN
Precipitation: T Inches

Work Performed Today (Indicate location and description of work performed and note any safety issues or deviations from the H&S plan):

INSTALLING GEOCELLS IN AREA C+D
DEVELOP BORROW [redacted] AREA
HAUL SOIL TO PCB CELL
GRADE AND FILL PCB AREA

BMP maintenance and inspection:	Yes	No
a) Inspection of engineering controls performed (ea. week and after rainfall)?	☑	☐
b) Attach weekly inspection forms (BMP and stormwater forms)?	☑	☐
c) Note any correction of defects below?	☑	☐
d) Weekly stormwater form?	☑	☐

Comments: NO DAMAGE OR DISCHARGE IN BMP AREA'S

Dust maintenance and monitoring: 1. 2. 3. mg/m³ NO DATA DUE TO RAIN

(note if dust suppression is applied)

Jason W Joiner
Name / Signature

12/1/15
Date

CBMPP INSPECTION FIELD REPORT LOG

Contractor Name: TC
Site Name: OU-3 Remedial Action Specific Area: PCB CELLS, BORROW AREA, C+D
Site Location (City, County, State): Anniston, Calhoun County, Alabama

Date: 12/1/15

Weather Conditions: Temp: Min 60° Max 69°
Description (Sunny, Cloudy, Overcast, etc) RAIN
Precipitation: 1.06 Inches

Work Performed Today (Indicate location and description of work performed and note any safety issues or deviations from the H&S plan):

INSTALLING GEOCELLS IN AREA C+D
DEVELOP BORROW [redacted] AREA
HAUL SOIL TO PCB CELL
GRADE ADD FILL PCB AREA

	Yes	No
BMP maintenance and inspection:		
a) Inspection of engineering controls performed (ea. week and after rainfall)?	☑	☐
b) Attach weekly inspection forms (BMP and stormwater forms)?	☑	☐
c) Note any correction of defects below?	☑	☐
d) Weekly stormwater form?	☑	☐

Comments: NO DAMAGE OR DISCHARGE

Dust maintenance and monitoring: > NO DATA DUE TO RAIN

(note if dust suppression is applied)

Jason W. Jones
Name / Signature

12/2/15
Date

CBMPP INSPECTION FIELD REPORT LOG

Contractor Name: TC
Site Name: OU-3 Remedial Action
Specific Area: PCB CELLS, BORROW AREA, C+D
Site Location (City, County, State): Anniston, Calhoun County, Alabama

Date: 12/2/15

Weather Conditions: Temp: Min 45° Max 63°
Description (Sunny, Cloudy, Overcast, etc) RAIN
Precipitation: .73 Inches

Work Performed Today (Indicate location and description of work performed and note any safety issues or deviations from the H&S plan):

INSTALLING GEOCELLS IN AREA C+D
DEVELOP BORROW [redacted] AREA
HAUL SOIL TO PCB CELL
GRADE AND FILL PCB AREA

	Yes	No
BMP maintenance and inspection:		
a) Inspection of engineering controls performed (ea. week and after rainfall)?	☑	☐
b) Attach weekly inspection forms (BMP and stormwater forms)?	☑	☐
c) Note any correction of defects below?	☑	☐
d) Weekly stormwater form?	☑	☐

Comments: NO DAMAGE OR DISCHARGE VISIABLE

Dust maintenance and monitoring: 1. 2. 3. > mg/m³ NO DATA DUE TO RAIN

(note if dust suppression is applied)

Jason L. Jones
Name / Signature

12/3/15
Date

CBMPP INSPECTION FIELD REPORT LOG

Contractor Name: TC
Site Name: OU-3 Remedial Action Specific Area: PCB CELLS, BORROW AREA, C+D
Site Location (City, County, State): Anniston, Calhoun County, Alabama

Date: 12/3/15

Weather Conditions: Temp: Min 33° Max 52°
Description (Sunny, Cloudy, Overcast, etc) Cloudy / RAIN
Precipitation: .01 Inches

Work Performed Today (Indicate location and description of work performed and note any safety issues or deviations from the H&S plan):

INSTALLING GEOCELLS IN AREA C+D
DEVELOP BORROW [redacted] AREA
HAUL SOIL TO PCB CELL
GRADE ADD FILL PCB AREA

BMP maintenance and inspection:	Yes	No
a) Inspection of engineering controls performed (ea. week and after rainfall)?	☑	☐
b) Attach weekly inspection forms (BMP and stormwater forms)?	☑	☐
c) Note any correction of defects below?	☑	☐
d) Weekly stormwater form?	☑	☐

Comments: NO DAMAGE OR DISCHARGE VISIABLE

Dust maintenance and monitoring: 1. 2. 3. > mg/m³ NO DATA DUE TO RAIN

(note if dust suppression is applied)

Jason W. Jones
Name / Signature

12/4/15
Date

CBMPP INSPECTION FIELD REPORT LOG

Contractor Name: TC
Site Name: OU-3 Remedial Action
Specific Area: PCB CELLS, BORROW AREA, C&D
Site Location (City, County, State): Anniston, Calhoun County, Alabama

Date: 12/4/15

Weather Conditions: Temp: Min 32° Max 59°
Description (Sunny, Cloudy, Overcast, etc) CLEAR
Precipitation: 0 Inches

Work Performed Today (Indicate location and description of work performed and note any safety issues or deviations from the H&S plan):

INSTALLING GEOCELLS IN AREA C&D
DEVELOP BORROW [redacted] AREA
HAUL SOIL TO PCB CELL
GRADE AND FILL PCB AREA

BMP maintenance and inspection:	Yes	No
a) Inspection of engineering controls performed (ea. week and after rainfall)?	☑	☐
b) Attach weekly inspection forms (BMP and stormwater forms)?	☑	☐
c) Note any correction of defects below?	☑	☐
d) Weekly stormwater form?	☑	☐

Comments: NO DAMAGE OR DISCHARGE VISIABLE

Dust maintenance and monitoring: 1.008
2.000 mg/m³
3.001

WATER TRUCK FOR DUST CONTROL

(note if dust suppression is applied)

Jason W. Jones
Name / Signature

12/5/15
Date

STORMWATER INSPECITON AND MAINTENANCE REPORT FORM

Site Name: Anniston PCB Site, OU-3 Remedial Action Cover Systems

Site Location: Anniston, Calhoun County, Alabama

NPDES Permit Number: Not Applicable

Weekly Rainfall Summary:

Day:	Sun	Mon	Tues	Wed	Thurs	Fri	Sat
Date:	12/6	12/7	12/8	12/9	12/10	12/11	12/12
Rainfall:	0	0	0	0	0	0	0

Sampling Information:

- **Sample Type:**
- **Location:**
- **Analysis:**

NA

Inspection Results:

- **Deficiencies or Required Maintenance:**
- **Planned Corrective Action:**
- **Corrective Action Schedule:**

AS NEEDED

- **Other Comments:**

Signature 12/14/15 **Date**

CBMPP INSPECTION FIELD REPORT LOG

Contractor Name: TC
Site Name: OU-3 Remedial Action Specific Area: PCB CELLS, BORROW AREA, C+D
Site Location (City, County, State): Anniston, Calhoun County, Alabama

Date: 12/7/15

Weather Conditions: Temp: Min 27 Max 47
Description (Sunny, Cloudy, Overcast, etc) Fog
Precipitation: .02 Inches

Work Performed Today (Indicate location and description of work performed and note any safety issues or deviations from the H&S plan):

INSTALLING GEOCELLS IN AREA C+D
DEVELOP BORROW [redacted] AREA
HAUL SOIL TO PCB CELL
GRADE AND FILL PCB AREA

	Yes	No
BMP maintenance and inspection:		
a) Inspection of engineering controls performed (ea. week and after rainfall)?	☑	☐
b) Attach weekly inspection forms (BMP and stormwater forms)?	☑	☐
c) Note any correction of defects below?	☑	☐
d) Weekly stormwater form?	☑	☐

Comments: NO DAMAGE OR DISCHARGE VISIABLE

Dust maintenance and monitoring: 1. .001
2. .006 mg/m³
3. .008

(note if dust suppression is applied)

Jason W. Jones
Name / Signature

12/8/15
Date

CBMPP INSPECTION FIELD REPORT LOG

Contractor Name: TC
Site Name: OU-3 Remedial Action Specific Area: PCB CELLS, BORROW AREA, C+D
Site Location (City, County, State): Anniston, Calhoun County, Alabama

Date: 12/9/15

Weather Conditions: Temp: Min 35 Max 67
Description (Sunny, Cloudy, Overcast, etc.) Cloudy
Precipitation: 0 Inches

Work Performed Today (Indicate location and description of work performed and note any safety issues or deviations from the H&S plan):

INSTALLING GEOCELLS IN AREA C+D
DEVELOP BORROW [redacted] AREA
HAUL SOIL TO PCB CELL
GRADE AND FILL PCB AREA

BMP maintenance and inspection:	Yes	No
a) Inspection of engineering controls performed (ea. week and after rainfall)?	☑	☐
b) Attach weekly inspection forms (BMP and stormwater forms)?	☑	☐
c) Note any correction of defects below?	☑	☐
d) Weekly stormwater form?	☑	☐

Comments: NO DAMAGE OR DISCHARGE VISIABLE

Dust maintenance and monitoring: 1. .003
2. .042 mg/m³
3. .001

(note if dust suppression is applied)

Jason W. Jones
Name / Signature

12/10/15
Date

CBMPP INSPECTION FIELD REPORT LOG

Contractor Name: TC
Site Name: OU-3 Remedial Action
Specific Area: PCB CELLS, BORROW AREA, C+D
Site Location (City, County, State): Anniston, Calhoun County, Alabama

Date: 12/10/12

Weather Conditions: Temp: Min 50 Max 71
Description (Sunny, Cloudy, Overcast, etc) CLEAR
Precipitation: 0 Inches

Work Performed Today (Indicate location and description of work performed and note any safety issues or deviations from the H&S plan):

INSTALLING GEOCELLS IN AREA C+D
DEVELOP BORROW [redacted] AREA
HAUL SOIL TO PCB CELL
GRADE AND FILL PCB AREA

BMP maintenance and inspection:	Yes	No
a) Inspection of engineering controls performed (ea. week and after rainfall)?	☑	☐
b) Attach weekly inspection forms (BMP and stormwater forms)?	☑	☐
c) Note any correction of defects below?	☑	☐
d) Weekly stormwater form?	☑	☐

Comments: NO DAMAGE OR DISCHARGE VISIABLE

Dust maintenance and monitoring: 1. .048
2. .013 mg/m³
3. .027

(note if dust suppression is applied)

Jason W. Jones
Name / Signature

12/11/12
Date

CBMPP INSPECTION FIELD REPORT LOG

Contractor Name: TC
Site Name: OU-3 Remedial Action
Specific Area: PCB CELLS, BORROW AREA, C+D
Site Location (City, County, State): Anniston, Calhoun County, Alabama

Date: 12/11/15

Weather Conditions: Temp: Min 53° Max 75°
Description (Sunny, Cloudy, Overcast, etc) CLEAR
Precipitation: 0 Inches

Work Performed Today (Indicate location and description of work performed and note any safety issues or deviations from the H&S plan):

INSTALLING GEOCELLS IN AREA C+D
DEVELOP BORROW [redacted] AREA
HAUL SOIL TO PCB CELL
GRADE AND FILL PCB AREA

BMP maintenance and inspection:	Yes	No
a) Inspection of engineering controls performed (ea. week and after rainfall)?	☑	☐
b) Attach weekly inspection forms (BMP and stormwater forms)?	☑	☐
c) Note any correction of defects below?	☑	☐
d) Weekly stormwater form?	☑	☐

Comments: NO DAMAGE OR DISCHARGE VISIABLE

Dust maintenance and monitoring: 1. .002
2. .010 mg/m³
3. .021

(note if dust suppression is applied)

Jason W. Jones
Name / Signature

12/14/15
Date

STORMWATER INSPECITON AND MAINTENANCE REPORT FORM

Site Name: Anniston PCB Site, OU-3 Remedial Action Cover Systems

Site Location: Anniston, Calhoun County, Alabama

NPDES Permit Number: Not Applicable

Weekly Rainfall Summary:

Day:	Sun	Mon	Tues	Wed	Thurs	Fri	Sat
Date:	12/13	12/14	12/15	12/16	12/17	12/18	12/19
Rainfall:	Ø	.31	Ø	.16	.12	ØT	Ø

Sampling Information:

- **Sample Type:**
- **Location:**
- **Analysis:**

NA

Inspection Results:

- **Deficiencies or Required Maintenance:** NO
- **Planned Corrective Action:** AS NEEDED
- **Corrective Action Schedule:** AS NEEDED
- **Other Comments:**

Signature

12/21/15

Date

CBMPP INSPECTION FIELD REPORT LOG

Contractor Name: TC
Site Name: OU-3 Remedial Action
Specific Area: PCB CELLS, BORROW AREA, C+D
Site Location (City, County, State): Anniston, Calhoun County, Alabama

Date: 12/14/15

Weather Conditions: Temp: Min 44° Max 71°
Description (Sunny, Cloudy, Overcast, etc) RAIN
Precipitation: .37 Inches

Work Performed Today (Indicate location and description of work performed and note any safety issues or deviations from the H&S plan):

INSTALLING GEOCELLS IN AREA C+D
DEVELOP BORROW [redacted] AREA
HAUL SOIL TO PCB CELL
GRADE AND FILL PCB AREA

BMP maintenance and inspection:	Yes	No
a) Inspection of engineering controls performed (ea. week and after rainfall)?	☑	☐
b) Attach weekly inspection forms (BMP and stormwater forms)?	☑	☐
c) Note any correction of defects below?	☑	☐
d) Weekly stormwater form?	☑	☐

Comments: NO DAMAGE OR DISCHARGE VISIABLE

Dust maintenance and monitoring:
1.
2.
3. mg/m³ NO DATA DUE TO RAIN

(note if dust suppression is applied)

Jason W. Jones
Name / Signature

12/15/15
Date

CBMPP INSPECTION FIELD REPORT LOG

Contractor Name: TC
Site Name: OU-3 Remedial Action
Specific Area: PCB CELLS, BORROW AREA, C+D
Site Location (City, County, State): Anniston, Calhoun County, Alabama

Date: 12/15/15

Weather Conditions: Temp: Min 40° Max 72°
Description (Sunny, Cloudy, Overcast, etc.) clear
Precipitation: 0 Inches

Work Performed Today (Indicate location and description of work performed and note any safety issues or deviations from the H&S plan):

INSTALLING GEOCELLS IN AREA C+D
DEVELOP BORROW [redacted] AREA
HAUL SOIL TO PCB CELL
GRADE AND FILL PCB AREA

BMP maintenance and inspection:	Yes	No
a) Inspection of engineering controls performed (ea. week and after rainfall)?	☑	☐
b) Attach weekly inspection forms (BMP and stormwater forms)?	☑	☐
c) Note any correction of defects below?	☑	☐
d) Weekly stormwater form?	☑	☐

Comments: NO DAMAGE OR DISCHARGE VISIABLE

Dust maintenance and monitoring: 1: .009
2: .006 mg/m³
3: .015
WATER TRUCK FOR SUPPRESSION

(note if dust suppression is applied)

Jason W. Jones
Name / Signature

12/16/15
Date

CBMPP INSPECTION FIELD REPORT LOG

Contractor Name: TC
Site Name: OU-3 Remedial Action
Specific Area: PCB CELLS, BORROW AREA, C&D
Site Location (City, County, State): Anniston, Calhoun County, Alabama

Date: 12/16/15

Weather Conditions: Temp: Min 39 Max 72°
Description (Sunny, Cloudy, Overcast, etc) RAIN
Precipitation: .16 inches

Work Performed Today (Indicate location and description of work performed and note any safety issues or deviations from the H&S plan):

INSTALLING GEOCELLS IN AREA C&D
DEVELOP BORROW [redacted] AREA
HAUL SOIL TO PCB CELLS
GRADE AND FILL PCB AREA

BMP maintenance and Inspection:	Yes	No
a) Inspection of engineering controls performed (ea. week and after rainfall)?	☑	☐
b) Attach weekly inspection forms (BMP and stormwater forms)?	☑	☐
c) Note any correction of defects below?	☑	☐
d) Weekly stormwater form?	☑	☐

Comments: NO DAMAGE OR DISCHARGE VISIABLE

Dust maintenance and monitoring:
1.
2. > mg/m³ NO DATA DUE TO RAIN
3.

(note if dust suppression is applied)

Jason W. Joyner
Name / Signature

12/17/15
Date

CBMPP INSPECTION FIELD REPORT LOG

Contractor Name: TC
Site Name: OU-3 Remedial Action
Specific Area: PCB CELLS, BORROW AREA, C+D
Site Location (City, County, State): Anniston, Calhoun County, Alabama

Date: 12/17/15

Weather Conditions: Temp: Min 41° Max 63°
Description (Sunny, Cloudy, Overcast, etc) RAIN
Precipitation: .12 Inches

Work Performed Today (Indicate location and description of work performed and note any safety issues or deviations from the H&S plan):

INSTALLING GEOCELLS IN AREA C+D
DEVELOP BORROW [redacted] AREA
HAUL [redacted] TO PCB CELL
GRADE ROAD TO PCB AREA

BMP maintenance and inspection:	Yes	No
a) Inspection of engineering controls performed (ea. week and after rainfall)?	☑	☐
b) Attach weekly inspection forms (BMP and stormwater forms)?	☑	☐
c) Note any correction of defects below?	☑	☐
d) Weekly stormwater form?	☑	☐

Comments: NO DAMAGE OR DISCHARGE VISIABLE

Dust maintenance and monitoring: 1. 2. 3. > mg/m³ NO DATA DUE TO RAIN

(note if dust suppression is applied)

Jason L. Joyner
Name / Signature

12/18/15
Date

CBMPP INSPECTION FIELD REPORT LOG

Contractor Name: TC
Site Name: OU-3 Remedial Action Specific Area: PCB CELLS, BORROW AREA, C+D
Site Location (City, County, State): Anniston, Calhoun County, Alabama

Date: 12/18/15

Weather Conditions: Temp: Min 28° Max 46°
Description (Sunny, Cloudy, Overcast, etc.) RAIN / CLEAR
Precipitation: T Inches

Work Performed Today (Indicate location and description of work performed and note any safety issues or deviations from the H&S plan):

INSTALLING GEOCELLS IN AREA C+D
DEVELOP BORROW [redacted] AREA
HAUL SOIL TO PCB CELL
GRADE AND FILL PCB AREA

	Yes	No
BMP maintenance and inspection:		
a) Inspection of engineering controls performed (ea. week and after rainfall)?	☑	☐
b) Attach weekly inspection forms (BMP and stormwater forms)?	☑	☐
c) Note any correction of defects below?	☑	☐
d) Weekly stormwater form?	☑	☐

Comments: NO DAMAGE OR DISCHARGE VISIABLE

Dust maintenance and monitoring: 1. 2. 3. → mg/m³ NO DATA DUE TO RAIN

(note if dust suppression is applied)

Jason W. Jones
Name / Signature

12/19/15
Date

STORMWATER INSPECITON AND MAINTENANCE REPORT FORM

Site Name: Anniston PCB Site, OU-3 Remedial Action Cover Systems

Site Location: Anniston, Calhoun County, Alabama

NPDES Permit Number: Not Applicable

Weekly Rainfall Summary:

Day:	Sun	Mon	Tues	Wed	Thurs	Fri	Sat
Date:	12/20/15	12/21/15	12/22/15	12/23/15	12/24/15	12/25/15	12/26/15
Rainfall:	Ø	.11	.64	.77	1.17	2.77	.09

Sampling Information:

- **Sample Type:**
- **Location:**
- **Analysis:**

NA

Inspection Results:

- **Deficiencies or Required Maintenance:** PCB CELL, BORROW AREA AREA CLD
- **Planned Corrective Action:** SPOT CORRECTION
- **Corrective Action Schedule:** AS NEEDED
- **Other Comments:**

Signature

12/27/15

Date

CBMPP INSPECTION FIELD REPORT LOG

Contractor Name: Taylor Corp.
Site Name: OU-3 Remedial Action Specific Area: ALL Solutia OU-3 Rem.
Site Location (City, County, State): Anniston, Calhoun County, Alabama

Date: 12/21/15

Weather Conditions: Temp: Min 48° Max 61°
Description (Sunny, Cloudy, Overcast, etc) Rain
Precipitation: .11 Inches

Work Performed Today (Indicate location and description of work performed and note any safety issues or deviations from the H&S plan):

Borrow Area - NA
PCB - NA
C+D - Installed Geo cell + DGA
A+E - NA

	Yes	No
BMP maintenance and inspection:		
a) Inspection of engineering controls performed (ea. week and after rainfall)?	☑	☐
b) Attach weekly inspection forms (BMP and stormwater forms)?	☑	☐
c) Note any correction of defects below?	☑	☐
d) Weekly stormwater form?	☑	☐

Comments: No Damage or Discharge Visible.
All Area's Being Dried For Holiday Shut Down.

Dust maintenance and monitoring:

NA

(note if dust suppression is applied)

Jason Johnson
Name / Signature

12/22/15
Date

CBMPP INSPECTION FIELD REPORT LOG

Contractor Name: Taylor Corp
Site Name: OU-3 Remedial Action Specific Area: ALL OU-3 Rem. Areas
Site Location (City, County, State): Anniston, Calhoun County, Alabama

Date: 12/22/15 **Weather Conditions:** Temp: Min 55° Max 68°
Description (Sunny, Cloudy, Overcast, etc) RAIN
Precipitation: .11 Inches

Work Performed Today (Indicate location and description of work performed and note any safety issues or deviations from the H&S plan):

Securing site and shoring up BMP's for holiday and rain to come

	Yes	No
BMP maintenance and inspection:		
a) Inspection of engineering controls performed (ea. week and after rainfall)?	☑	☐
b) Attach weekly inspection forms (BMP and stormwater forms)?	☑	☐
c) Note any correction of defects below?	☑	☐
d) Weekly stormwater form?	☑	☐

Comments:

Dust maintenance and monitoring:
NA

(note if dust suppression is applied)

Jason L. Jones
Name / Signature

12/22/15
Date

CBMPP INSPECTION FIELD REPORT LOG

Contractor Name: Taylor Corp
Site Name: OU-3 Remedial Action Specific Area: ALL OU-3 Rem. Site
Site Location (City, County, State): Anniston, Calhoun County, Alabama

Date: 12/23/15

Weather Conditions: Temp: Min 64 Max 73°
Description (Sunny, Cloudy, Overcast, etc) Rain
Precipitation: .77 Inches

Work Performed Today (Indicate location and description of work performed and note any safety issues or deviations from the H&S plan):

Holiday - No Work Performed

	Yes	No
BMP maintenance and inspection:		
a) Inspection of engineering controls performed (ea. week and after rainfall)?	☑	☐
b) Attach weekly inspection forms (BMP and stormwater forms)?	☑	☐
c) Note any correction of defects below?	☑	☐
d) Weekly stormwater form?	☑	☐

Comments: Daily BMP Inspections Done and spot Repair made

Dust maintenance and monitoring:

(note if dust suppression is applied)

Jason Winters
Name / Signature

12/23/15
Date

CBMPP INSPECTION FIELD REPORT LOG

Contractor Name: TAYLOR Corp
Site Name: OU-3 Remedial Action Specific Area: ALL OU-3 Rem. SITE
Site Location (City, County, State): Anniston, Calhoun County, Alabama

Date: 12/24/15

Weather Conditions: Temp: Min 66° Max 74°
Description (Sunny, Cloudy, Overcast, etc) Rain
Precipitation: 1.17 Inches

Work Performed Today (Indicate location and description of work performed and note any safety issues or deviations from the H&S plan):

HOLIDAY - NO WORK PERFORMED

	Yes	No
BMP maintenance and inspection:		
a) Inspection of engineering controls performed (ea. week and after rainfall)?	☑	☐
b) Attach weekly inspection forms (BMP and stormwater forms)?	☑	☐
c) Note any correction of defects below?	☑	☐
d) Weekly stormwater form?	☑	☐

Comments: DAILY BMP INSPECTIONS DONE AND SPOT REPAIR MADE

Dust maintenance and monitoring:

(note if dust suppression is applied)

Jason W Jones
Name / Signature

12/24/15
Date

CBMPP INSPECTION FIELD REPORT LOG

Contractor Name: TAYLOR CORP
Site Name: OU-3 Remedial Action Specific Area: ALL OU-3 REM. SITE
Site Location (City, County, State): Anniston, Calhoun County, Alabama

Date: 12/25/15

Weather Conditions: Temp: Min 63° Max 78°
Description (Sunny, Cloudy, Overcast, etc.) Rain
Precipitation: 2.77 Inches

Work Performed Today (Indicate location and description of work performed and note any safety issues or deviations from the H&S plan):

HOLIDAY - NO WORK PERFORMED

	Yes	No
BMP maintenance and inspection:		
a) Inspection of engineering controls performed (ea. week and after rainfall)?	☑	☐
b) Attach weekly inspection forms (BMP and stormwater forms)?	☑	☐
c) Note any correction of defects below?	☑	☐
d) Weekly stormwater form?	☑	☐

Comments: DAILY BMP INSPECTIONS DONE AND SPOT REPAIR MADE

Dust maintenance and monitoring:

(note if dust suppression is applied)

Jason W Jones
Name / Signature

12/25/15
Date

STORMWATER INSPECITON AND MAINTENANCE REPORT FORM

Site Name: Anniston PCB Site, OU-3 Remedial Action Cover Systems

Site Location: Anniston, Calhoun County, Alabama

NPDES Permit Number: Not Applicable

Weekly Rainfall Summary:

Day:	Sun	Mon	Tues	Wed	Thurs	Fri	Sat
Date:	12/27/15	12/28/15	12/29/15	12/30/15	12/31/15		
Rainfall:	~~0~~	.84	.00	1.02	0		

Sampling Information:

- **Sample Type:** NA
- **Location:**
- **Analysis:**

Inspection Results:

- **Deficiencies or Required Maintenance:** AS NEEDED
- **Planned Corrective Action:** AS NEEDED
- **Corrective Action Schedule:** AS NEEDED
- **Other Comments:** SEE DAILY BMP INSPECTION SHEETS

Signature

1/4/15
Date

CBMPP INSPECTION FIELD REPORT LOG

Contractor Name: TAYLOR CORP
Site Name: OU-3 Remedial Action Specific Area: ALL OU-3 REM. SITE
Site Location (City, County, State): Anniston, Calhoun County, Alabama

Date: 12/27/15

Weather Conditions: Temp: Min 67° Max 76°
Description (Sunny, Cloudy, Overcast, etc) RAIN / CLOUDY
Precipitation: 0 Inches

Work Performed Today (Indicate location and description of work performed and note any safety issues or deviations from the H&S plan):

HOLIDAY - NO WORK PERFORMED

	Yes	No
BMP maintenance and inspection:		
a) Inspection of engineering controls performed (ea. week and after rainfall)?	☑	☐
b) Attach weekly inspection forms (BMP and stormwater forms)?	☑	☐
c) Note any correction of defects below?	☑	☐
d) Weekly stormwater form?	☑	☐

Comments: DAILY BMP INSPECTIONS DONE AND SPOT REPAIR MADE

Dust maintenance and monitoring:

(note if dust suppression is applied)

Jason W Jones
Name / Signature

12/27/15
Date

CBMPP INSPECTION FIELD REPORT LOG

Contractor Name: Taylor Corp
Site Name: OU-3 Remedial Action Specific Area: ALL OU-3 Rem. Site
Site Location (City, County, State): Anniston, Calhoun County, Alabama

Date: 12/28/15

Weather Conditions: Temp: Min 61° Max 73°
Description (Sunny, Cloudy, Overcast, etc) Rain
Precipitation: _____ Inches

Work Performed Today (Indicate location and description of work performed and note any safety issues or deviations from the H&S plan):

Holiday - No Work Performed

	Yes	No
BMP maintenance and inspection:		
a) Inspection of engineering controls performed (ea. week and after rainfall)?	☑	☐
b) Attach weekly inspection forms (BMP and stormwater forms)?	☑	☐
c) Note any correction of defects below?	☑	☐
d) Weekly stormwater form?	☑	☐

Comments: Daily BMP Inspections Done and spot Repair made

Dust maintenance and monitoring:

(note if dust suppression is applied)

Jason Winters
Name / Signature

12/28/15
Date

CBMPP INSPECTION FIELD REPORT LOG

Contractor Name: TAYLOR CORP
Site Name: OU-3 Remedial Action Specific Area: ALL OU-3 REM. SITE
Site Location (City, County, State): Anniston, Calhoun County, Alabama

Date: 12/29/15

Weather Conditions: Temp: Min 53° Max 65°
Description (Sunny, Cloudy, Overcast, etc) Sunny / Few clouds
Precipitation: 0 Inches

Work Performed Today (Indicate location and description of work performed and note any safety issues or deviations from the H&S plan):

HOLIDAY - NO WORK PERFORMED

	Yes	No
BMP maintenance and inspection:		
a) Inspection of engineering controls performed (ea. week and after rainfall)?	☑	☐
b) Attach weekly inspection forms (BMP and stormwater forms)?	☑	☐
c) Note any correction of defects below?	☑	☐
d) Weekly stormwater form?	☑	☐

Comments: DAILY BMP INSPECTIONS DONE AND SPOT REPAIR MADE

Dust maintenance and monitoring:

(note if dust suppression is applied)

Jason W Jones
Name / Signature

12/29/15
Date

CBMPP INSPECTION FIELD REPORT LOG

Contractor Name: TAYLOR Corp
Site Name: OU-3 Remedial Action Specific Area: ALL OU-3 REM. SITE
Site Location (City, County, State): Anniston, Calhoun County, Alabama

Date: 12/30/15

Weather Conditions: Temp: Min 55° Max 59°
Description (Sunny, Cloudy, Overcast, etc) RAIN
Precipitation: 1.02 Inches

Work Performed Today (Indicate location and description of work performed and note any safety issues or deviations from the H&S plan):

HOLIDAY - NO WORK PERFORMED

	Yes	No
BMP maintenance and inspection:		
a) Inspection of engineering controls performed (ea. week and after rainfall)?	☑	☐
b) Attach weekly inspection forms (BMP and stormwater forms)?	☑	☐
c) Note any correction of defects below?	☑	☐
d) Weekly stormwater form?	☑	☐

Comments: DAILY BMP INSPECTIONS DONE AND SPOT REPAIR MADE

Dust maintenance and monitoring:

(note if dust suppression is applied)

Jason M Jones
Name / Signature

12/30/15
Date

CBMPP INSPECTION FIELD REPORT LOG

Contractor Name: TAYLOR CORP
Site Name: OU-3 Remedial Action Specific Area: ALL OU-3 REM. SITE
Site Location (City, County, State): Anniston, Calhoun County, Alabama

Date: 12/31/15

Weather Conditions: Temp: Min 43° Max 58°
Description (Sunny, Cloudy, Overcast, etc) SUNNY
Precipitation: 0 Inches

Work Performed Today (Indicate location and description of work performed and note any safety issues or deviations from the H&S plan):

HOLIDAY - NO WORK PERFORMED

	Yes	No
BMP maintenance and inspection:		
a) Inspection of engineering controls performed (ea. week and after rainfall)?	☑	☐
b) Attach weekly inspection forms (BMP and stormwater forms)?	☑	☐
c) Note any correction of defects below?	☑	☐
d) Weekly stormwater form?	☑	☐

Comments: DAILY BMP INSPECTIONS DONE AND SPOT REPAIR MADE

Dust maintenance and monitoring:

(note if dust suppression is applied)

Jason W Jones
Name / Signature

12/31/15
Date

Climatological Data for ANNISTON METRO AP, AL - January 2016

Date	Temperature				HDD	CDD	Precipitation	New Snow	Snow Depth
	Maximum	Minimum	Average	Departure					
2016-01-01	45	38	41.5	-1.9	23	0	0.00	0.0	0
2016-01-02	47	32	39.5	-3.8	25	0	0.00	0.0	0
2016-01-03	53	30	41.5	-1.8	23	0	0.00	0.0	0
2016-01-04	46	30	38.0	-5.2	27	0	0.00	0.0	0
2016-01-05	47	27	37.0	-6.2	28	0	0.00	0.0	0
2016-01-06	53	31	42.0	-1.1	23	0	0.00	0.0	0
2016-01-07	61	37	49.0	5.9	16	0	T	0.0	0
2016-01-08	58	48	53.0	9.9	12	0	0.01	0.0	0
2016-01-09	56	48	52.0	8.9	13	0	0.02	0.0	0
2016-01-10	48	26	37.0	-6.0	28	0	0.02	0.0	0
2016-01-11	46	21	33.5	-9.5	31	0	0.00	0.0	0
2016-01-12	54	22	38.0	-5.0	27	0	0.00	0.0	0
2016-01-13	51	26	38.5	-4.5	26	0	0.00	0.0	0
2016-01-14	62	27	44.5	1.5	20	0	0.00	0.0	0
2016-01-15	52	41	46.5	3.4	18	0	0.91	M	0
2016-01-16	57	41	49.0	5.9	16	0	0.00	0.0	0
2016-01-17	49	29	39.0	-4.1	26	0	0.05	0.0	0
2016-01-18	38	20	29.0	-14.2	36	0	0.00	0.0	0
2016-01-19	41	18	29.5	-13.7	35	0	0.00	0.0	0
2016-01-20	47	33	40.0	-3.3	25	0	0.08	M	0
2016-01-21	52	42	47.0	3.7	18	0	0.59	0.0	0
2016-01-22	53	30	41.5	-1.9	23	0	0.76	T	0
2016-01-23	32	26	29.0	-14.4	36	0	0.00	0.0	0
2016-01-24	50	20	35.0	-8.5	30	0	0.00	0.0	0
2016-01-25	61	27	44.0	0.4	21	0	0.00	0.0	0
2016-01-26	60	50	55.0	11.3	10	0	0.72	0.0	0
2016-01-27	52	35	43.5	-0.3	21	0	0.03	M	0
2016-01-28	57	32	44.5	0.6	20	0	0.00	0.0	0
2016-01-29	58	34	46.0	2.0	19	0	0.00	0.0	0
2016-01-30	69	32	50.5	6.3	14	0	0.00	0.0	0
2016-01-31	70	45	57.5	13.2	7	0	0.00	0.0	0
Sum	1625	998	-	-	697	0	3.19	T	-
Average	52.4	32.2	42.3	-1.1	-	-	-	-	0.0
Normal	53.7	33.0	43.4	-	671	0	4.52	0.7	-

Observations for each day cover the 24 hours ending at the time given below (Local Standard Time).
Max Temperature : midnight
Min Temperature : midnight
Precipitation : midnight
Snowfall : midnight
Snow Depth : 6am

STORMWATER INSPECITON AND MAINTENANCE REPORT FORM

Site Name: Anniston PCB Site, OU-3 Remedial Action Cover Systems

Site Location: Anniston, Calhoun County, Alabama

NPDES Permit Number: Not Applicable

Weekly Rainfall Summary:

Day:	Sun	Mon	Tues	Wed	Thurs	Fri	Sat
Date:						1/1/16	1/2/16
Rainfall:						0	0

Sampling Information:

- **Sample Type:**
- **Location:**
- **Analysis:**

NA

Inspection Results:

- **Deficiencies or Required Maintenance:**
- **Planned Corrective Action:**
- **Corrective Action Schedule:**

AS NEEDED

- **Other Comments:**

Signature

1/3/16

Date

CBMPP INSPECTION FIELD REPORT LOG

Contractor Name: TAYLOR CORP
Site Name: OU-3 Remedial Action Specific Area: ALL OU-3 REM. SITE
Site Location (City, County, State): Anniston, Calhoun County, Alabama

Date: 1/1/16

Weather Conditions: Temp: Min 38° Max 45°
Description (Sunny, Cloudy, Overcast, etc) CLEAR
Precipitation: Ø Inches

Work Performed Today (Indicate location and description of work performed and note any safety issues or deviations from the H&S plan):

HOLIDAY - NO WORK PERFORMED

BMP maintenance and inspection:	Yes	No
a) Inspection of engineering controls performed (ea. week and after rainfall)?	☑	☐
b) Attach weekly inspection forms (BMP and stormwater forms)?	☑	☐
c) Note any correction of defects below?	☑	☐
d) Weekly stormwater form?	☑	☐

Comments: DAILY BMP INSPECTIONS DONE AND SPOT REPAIR MADE

Dust maintenance and monitoring:

(note if dust suppression is applied)

Jason W Jones
Name / Signature

1/1/16
Date

CBMPP INSPECTION FIELD REPORT LOG

Contractor Name: TAYLOR CORP
Site Name: OU-3 Remedial Action Specific Area: ALL OU-3 REM. SITE
Site Location (City, County, State): Anniston, Calhoun County, Alabama

Date: 1/2/16

Weather Conditions: Temp: Min 32° Max 47°
Description (Sunny, Cloudy, Overcast, etc) CLEAR
Precipitation: 0 Inches

Work Performed Today (Indicate location and description of work performed and note any safety issues or deviations from the H&S plan):

HOLIDAY - NO WORK PERFORMED

BMP maintenance and inspection:	Yes	No
a) Inspection of engineering controls performed (ea. week and after rainfall)?	☑	☐
b) Attach weekly inspection forms (BMP and stormwater forms)?	☑	☐
c) Note any correction of defects below?	☑	☐
d) Weekly stormwater form?	☑	☐

Comments: DAILY BMP INSPECTIONS DONE AND SPOT REPAIR MADE

Dust maintenance and monitoring:

(note if dust suppression is applied)

Jason W Jones
Name / Signature

1/2/16
Date

STORMWATER INSPECITON AND MAINTENANCE REPORT FORM

Site Name: Anniston PCB Site, OU-3 Remedial Action Cover Systems

Site Location: Anniston, Calhoun County, Alabama

NPDES Permit Number: Not Applicable

Weekly Rainfall Summary:

Day:	Sun	Mon	Tues	Wed	Thurs	Fri	Sat
Date:	1-3-16	1-4-16	1-5-16	1-6-16	1-7-16	1-8-16	1-9-16
Rainfall:	0	T	0	0	.01	.02	.02

Sampling Information:

- **Sample Type:**
- **Location:**
- **Analysis:**

NA

Inspection Results:

- **Deficiencies or Required Maintenance:**
- **Planned Corrective Action:**

AS NEEDED

- **Corrective Action Schedule:**
- **Other Comments:**

Signature

1-10-16

Date

CBMPP INSPECTION FIELD REPORT LOG

Contractor Name: TALOR Corp
Site Name: OU-3 Remedial Action
Specific Area: Borrow Area, PCB Cell, C+D
Site Location (City, County, State): Anniston, Calhoun County, Alabama

Date: 1-4-16

Weather Conditions: Temp: Min ~~48~~ 30° Max 48
Description (Sunny, Cloudy, Overcast, etc) Rain
Precipitation: T Inches

Work Performed Today (Indicate location and description of work performed and note any safety issues or deviations from the H&S plan):

Borrow Area - Screen soil for PCB cells
PCB cells - Put down cover soil
C+D - Made Repairs

BMP maintenance and inspection:	Yes	No
a) Inspection of engineering controls performed (ea. week and after rainfall)?	☑	☐
b) Attach weekly inspection forms (BMP and stormwater forms)?	☑	☐
c) Note any correction of defects below?	☑	☐
d) Weekly stormwater form?	☑	☐

Comments: No damage or discharge. Bmps in good condition. Repair made as needed.

Dust maintenance and monitoring: no dust monitoring due to rain
Water truck used for dust supression on as need bases

(note if dust suppression is applied)

Jason W. Joiner
Name / Signature

1-5-16
Date

BMP INSPECTION FIELD REPORT LOG

Contractor Name: Taylor Corp.
Site Name: OU-3 Remedial Action
Site Location (City, County, State): Anniston, Calhoun County, Alabama
Specific Area: PCB CELL

Date: 1/5/16

Weather Conditions: Temp: Min 28 Max 42°
Description (Sunny, Cloudy, Overcast, etc): Partly Sunny
Precipitation: 0 Inches

Work Performed Today (Indicate location and description of work performed and note any safety issues or deviations from the H&S plan):

CONTINUED DEVELOPMENT OF BORROW AREA
CONTINUED HAULING SOIL TO PCB CELL

BMP maintenance and inspection:	Yes	No
a. Inspection of engineering controls performed (ea. week and after rainfall)?	✓	
b. Attach weekly inspection forms (BMP and stormwater forms)?	✓	
c. Note any correction of defects below?	✓	
d. Weekly stormwater form?		

Comments: BMP's GOOD CONDITION. NO DISCHARGE OR DAMAGE APPARENT

Dust maintenance and monitoring: 1).002 mg/m3
2).001
3).001

WATER TRUCK AS NEEDED

(note if dust suppression is applied)

Jason W. Joiner
Name / Signature

1/16/16
Date

CBMPP INSPECTION FIELD REPORT LOG

Contractor Name: TALOR Corp
Site Name: OU-3 Remedial Action Specific Area: Borrow Area, PCB Cell, C+D
Site Location (City, County, State): Anniston, Calhoun County, Alabama

Date: 1-6-16

Weather Conditions: Temp: Min 31° Max 53°
Description (Sunny, Cloudy, Overcast, etc) Cloudy
Precipitation: Ø Inches

Work Performed Today (Indicate location and description of work performed and note any safety issues or deviations from the H&S plan):

Borrow Area - Screened and hauled soil
PCB cells - Continued soil cover
C+D - No work done

BMP maintenance and inspection:	Yes	No
a) Inspection of engineering controls performed (ea. week and after rainfall)?	☑	☐
b) Attach weekly inspection forms (BMP and stormwater forms)?	☑	☐
c) Note any correction of defects below?	☑	☐
d) Weekly stormwater form?	☑	☐

Comments: No damage or discharge. Bmps in good condition. Repair made as needed.

Dust maintenance and monitoring: 1. .018 2. .016 3. .003 > mg/m³
Water truck used for dust supression on as need bases

(note if dust suppression is applied)

Jason W. Joiner
Name / Signature

1-7-16
Date

CBMPP INSPECTION FIELD REPORT LOG

Contractor Name: TALOR Corp
Site Name: OU-3 Remedial Action Specific Area: Borrow Area, PCB Cell, C+D
Site Location (City, County, State): Anniston, Calhoun County, Alabama

Date: 1-7-16

Weather Conditions: Temp: Min 37° Max 61°
Description (Sunny, Cloudy, Overcast, etc) Rain
Precipitation: .01 Inches

Work Performed Today (Indicate location and description of work performed and note any safety issues or deviations from the H&S plan):

Borrow Area - Screened and Hualed soil
PCB Cells - Continued soil cover
C+D - no work done

BMP maintenance and inspection:	Yes	No
a) Inspection of engineering controls performed (ea. week and after rainfall)?	☑	☐
b) Attach weekly inspection forms (BMP and stormwater forms)?	☑	☐
c) Note any correction of defects below?	☑	☐
d) Weekly stormwater form?	☑	☐

Comments: No damage or discharge. Bmps in good condition. Repair made as needed.

Dust maintenance and monitoring: no air monitoring due to rain
Water truck used for dust supression on as need bases

(note if dust suppression is applied)

Jason W. Joiner
Name / Signature

1-8-16
Date

CBMPP INSPECTION FIELD REPORT LOG

Contractor Name: TALOR Corp
Site Name: OU-3 Remedial Action
Specific Area: Borrow Area, PCB Cell, C+D
Site Location (City, County, State): Anniston, Calhoun County, Alabama

Date: 1-8-16

Weather Conditions: Temp: Min 48° Max 58°
Description (Sunny, Cloudy, Overcast, etc) RAIN
Precipitation: _____ Inches

Work Performed Today (Indicate location and description of work performed and note any safety issues or deviations from the H&S plan):

Borrow Area - Screened Soil
PCB Cells - Continued grading soil cover and installed plast
C+D - no work done

BMP maintenance and inspection:	Yes	No
a) Inspection of engineering controls performed (ea. week and after rainfall)?	☑	☐
b) Attach weekly inspection forms (BMP and stormwater forms)?	☑	☐
c) Note any correction of defects below?	☑	☐
d) Weekly stormwater form?	☑	☐

Comments: No damage or discharge. Bmps in good condition. Repair made as needed.

Dust maintenance and monitoring: no monitoring due to rain
Water truck used for dust supression on as need bases

(note if dust suppression is applied)

Jason W. Joiner
Name / Signature

1-9-16
Date

STORMWATER INSPECITON AND MAINTENANCE REPORT FORM

Site Name: Anniston PCB Site, OU-3 Remedial Action Cover Systems

Site Location: Anniston, Calhoun County, Alabama

NPDES Permit Number: Not Applicable

Weekly Rainfall Summary:

Day:	Sun	Mon	Tues	Wed	Thurs	Fri	Sat
Date:	1-10-16	1-11-16	1-12-16	1-13-16	1-14-16	1-15-16	1-16-16
Rainfall:	.02 W	Ø	Ø	Ø	Ø	.91 W	Ø

Sampling Information:

- **Sample Type:** NA
- **Location:** ~~ASH~~
- **Analysis:**

Inspection Results:

- **Deficiencies or Required Maintenance:**
- **Planned Corrective Action:** AS NEEDED
- **Corrective Action Schedule:**
- **Other Comments:**

Signature 1-16-16 **Date**

CBMPP INSPECTION FIELD REPORT LOG

Contractor Name: TALOR Corp
Site Name: OU-3 Remedial Action Specific Area: Borrow Area, PCB Cell, C+D
Site Location (City, County, State): Anniston, Calhoun County, Alabama

Date: 1-11-15

Weather Conditions: Temp: Min 21° Max 46°
Description (Sunny, Cloudy, Overcast, etc) CLEAR
Precipitation: 0 Inches

Work Performed Today (Indicate location and description of work performed and note any safety issues or deviations from the H&S plan):

Borrow Area - Screened Soil for cover
PCB Cells - Hauled + Placed Soil Cover
C+D - No work Done

BMP maintenance and inspection:	Yes	No
a) Inspection of engineering controls performed (ea. week and after rainfall)?	☑	☐
b) Attach weekly inspection forms (BMP and stormwater forms)?	☑	☐
c) Note any correction of defects below?	☑	☐
d) Weekly stormwater form?	☑	☐

Comments: No damage or discharge. Bmps in good condition. Repair made as needed.

Dust maintenance and monitoring: 1. .000 2. .000 3. .003
Water Truck used for Dust Supression on as need Bases

(note if dust suppression is applied)

Jason W. Joiner
Name / Signature

1-12-15
Date

CBMPP INSPECTION FIELD REPORT LOG

Contractor Name: TALOR Corp
Site Name: OU-3 Remedial Action Specific Area: Borrow Area, PCB Cell, C+D
Site Location (City, County, State): Anniston, Calhoun County, Alabama

Date: 1-12-16

Weather Conditions: Temp: Min 22° Max 54°
Description (Sunny, Cloudy, Overcast, etc) CLEAR
Precipitation: 0 Inches

Work Performed Today (Indicate location and description of work performed and note any safety issues or deviations from the H&S plan):

Borrow Area - Screen Cover Soil
PCB Cells - Hauled + Placed Cover Soil
C+D - Nothing Done

BMP maintenance and inspection:	Yes	No
a) Inspection of engineering controls performed (ea. week and after rainfall)?	☑	☐
b) Attach weekly inspection forms (BMP and stormwater forms)?	☑	☐
c) Note any correction of defects below?	☑	☐
d) Weekly stormwater form?	☑	☐

Comments: No Damage or Discharge. Bmps in Good Condition. Repair made as needed.

Dust maintenance and monitoring: 1. 000 2. 011
Water Truck used for Dust Supression on as need Bases

(note if dust suppression is applied)

Jason W. Joiner
Name / Signature

1-13-16
Date

CBMPP INSPECTION FIELD REPORT LOG

Contractor Name: TALOR Corp
Site Name: OU-3 Remedial Action Specific Area: Borrow Area, PCB Cell, C+D
Site Location (City, County, State): Anniston, Calhoun County, Alabama

Date: 1-13-16 **Weather Conditions:** Temp: Min 26° Max 51°
Description (Sunny, Cloudy, Overcast, etc) CLEAR
Precipitation: Ø Inches

Work Performed Today (Indicate location and description of work performed and note any safety issues or deviations from the H&S plan):

Borrow Area - Screen cover soil
PCB Cells - Placed cover soil
C+D - NA

BMP maintenance and inspection:	Yes	No
a) Inspection of engineering controls performed (ea. week and after rainfall)?	☑	☐
b) Attach weekly inspection forms (BMP and stormwater forms)?	☑	☐
c) Note any correction of defects below?	☑	☐
d) Weekly stormwater form?	☑	☐

Comments: No damage or discharge. Bmps in good condition. Repair made as needed.

Dust maintenance and monitoring: 1. .021
2. .000
3. .004
Water truck used for dust supression on as need bases

(note if dust suppression is applied)

Jason W. Joiner
Name / Signature

1-14-16
Date

CBMPP INSPECTION FIELD REPORT LOG

Contractor Name: TALOR Corp
Site Name: OU-3 Remedial Action Specific Area: Borrow Area, PCB Cell, C+D
Site Location (City, County, State): Anniston, Calhoun County, Alabama

Date: 1-14-16

Weather Conditions: Temp: Min 27° Max 62°
Description (Sunny, Cloudy, Overcast, etc) CLEAR
Precipitation: 0 Inches

Work Performed Today (Indicate location and description of work performed and note any safety issues or deviations from the H&S plan):

Borrow Area - Screen Down
PCB Cells - Pushed Soil on Cells
C+D - NA

BMP maintenance and inspection:	Yes	No
a) Inspection of engineering controls performed (ea. week and after rainfall)?	☑	☐
b) Attach weekly inspection forms (BMP and stormwater forms)?	☑	☐
c) Note any correction of defects below?	☑	☐
d) Weekly stormwater form?	☑	☐

Comments: No Damage or Discharge. Bmps in Good Condition. Repair made as needed.

Dust maintenance and monitoring: 1:.000 2:.000 3:.004
Water Truck used for Dust Supression on as need Bases

(note if dust suppression is applied)

Jason W. Joiner
Name / Signature

1-15-16
Date

CBMPP INSPECTION FIELD REPORT LOG

Contractor Name: TALOR Corp
Site Name: OU-3 Remedial Action Specific Area: Borrow Area, PCB Cell, C+D
Site Location (City, County, State): Anniston, Calhoun County, Alabama

Date: 1-15-16

Weather Conditions: Temp: Min 41° Max 52°
Description (Sunny, Cloudy, Overcast, etc) Rain
Precipitation: .91 Inches

Work Performed Today (Indicate location and description of work performed and note any safety issues or deviations from the H&S plan):

Borrow Area - no work done
PCB cells - no work done
C+D - NA

BMP maintenance and inspection:	Yes	No
a) Inspection of engineering controls performed (ea. week and after rainfall)?	☑	☐
b) Attach weekly inspection forms (BMP and stormwater forms)?	☑	☐
c) Note any correction of defects below?	☑	☐
d) Weekly stormwater form?	☑	☐

Comments: No damage or discharge. Bmps in good condition. Repair made as needed.

Dust maintenance and monitoring:

Water truck used for dust supression on as need bases

(note if dust suppression is applied)

Jason W. Joiner
Name / Signature

1-16-16
Date

STORMWATER INSPECITON AND MAINTENANCE REPORT FORM

Site Name: Anniston PCB Site, OU-3 Remedial Action Cover Systems

Site Location: Anniston, Calhoun County, Alabama

NPDES Permit Number: Not Applicable

Weekly Rainfall Summary:

Day:	Sun	Mon	Tues	Wed	Thurs	Fri	Sat
Date:	1-17-16	1-18-16	1-19-16	1-20-16	1-21-16	1-22-16	1-23-16
Rainfall:	.05	Ø	Ø	0.08	0.59	.76	Ø

Sampling Information:

- **Sample Type:** N/A
- **Location:**
- **Analysis:**

Inspection Results:

- **Deficiencies or Required Maintenance:** C+D AREA
- **Planned Corrective Action:** RESLOPE AND EXCAVATE / REINFORCE RACK/BMP FOR AREA RUNOFF
- **Corrective Action Schedule:** 1-21-16 - 1-22-16
- **Other Comments:** UPON COMPLETION AREA WAS APPROVED BY SITE MANAGERS

Signature

1-25-16
Date

CBMPP INSPECTION FIELD REPORT LOG

Contractor Name: TALOR Corp
Site Name: OU-3 Remedial Action Specific Area: Borrow Area, PCB Cell, C+D
Site Location (City, County, State): Anniston, Calhoun County, Alabama

Date: 1-17-16

Weather Conditions: Temp: Min 49° Max 29°
Description (Sunny, Cloudy, Overcast, etc) Cloudy
Precipitation: .05 Inches

Work Performed Today (Indicate location and description of work performed and note any safety issues or deviations from the H&S plan):

Borrow Area - Screened Soil
PCB Cells - Did not work area
C+D - Did not work area

BMP maintenance and inspection:	Yes	No
a) Inspection of engineering controls performed (ea. week and after rainfall)?	☑	☐
b) Attach weekly inspection forms (BMP and stormwater forms)?	☑	☐
c) Note any correction of defects below?	☑	☐
d) Weekly stormwater form?	☑	☐

Comments: No damage or discharge. Bmps in good condition. Repair made as needed.

Dust maintenance and monitoring: Weekend/no monitors out
Water truck used for dust supression on as need bases

(note if dust suppression is applied)

Jason W. Joiner
Name / Signature

1-18-16
Date

CBMPP INSPECTION FIELD REPORT LOG

Contractor Name: Taylor Corp
Site Name: OU-3 Remedial Action Specific Area: Borrow Area, PCB Cell, C+D
Site Location (City, County, State): Anniston, Calhoun County, Alabama

Date: 1-18-16

Weather Conditions: Temp: Min 20° Max 38°
Description (Sunny, Cloudy, Overcast, etc) OVERCAST
Precipitation: 0.00 Inches

Work Performed Today (Indicate location and description of work performed and note any safety issues or deviations from the H&S plan):

Borrow Area - Screen Soil / Hauling dirt to PCB Area (Foreman Tyler/Crew)
PCB Cells - Continued seed + Hay / Graded Hauled Dirt (Foreman Tyler/Crew)
C + D - Not worked
Siberian - Continued outer Boundary Fence
Foreman Randy/Crew Continued Ground Water Work / Installed cement cover fixtures for main lines going to small building Hauled in.

BMP maintenance and inspection:	Yes	No
a) Inspection of engineering controls performed (ea. week and after rainfall)?	☑	☐
b) Attach weekly inspection forms (BMP and stormwater forms)?	☑	☐
c) Note any correction of defects below?	☑	☐
d) Weekly stormwater form?	☑	☐

Comments: No Damage or Discharge. BMPs in Good Condition. Repair Made As Needed

Dust maintenance and monitoring: 1: 0.00 2: 0.00 3: 0.00
Water Truck used for Dust Suppression on As Need Bases

(note if dust suppression is applied)

Mike Lilo / [signature]
Name / Signature

1-19-16
Date

CBMPP INSPECTION FIELD REPORT LOG

Contractor Name: Taylor Corp
Site Name: OU-3 Remedial Action Specific Area: Borrow Area, PCB Cell, C+D
Site Location (City, County, State): Anniston, Calhoun County, Alabama

Date: 1-19-16 **Weather Conditions:** Temp: Min 18° Max 41°
Description (Sunny, Cloudy, Overcast, etc) Cloudy
Precipitation: 0.00 Inches

Work Performed Today (Indicate location and description of work performed and note any safety issues or deviations from the H&S plan):

Borrow Area - Screen Dirt, Hauled Soil To PCB Area
PCB Cells - Continued to Grade & Cap Off Area
C & D - None

	Yes	No
BMP maintenance and inspection:		
a) Inspection of engineering controls performed (ea. week and after rainfall)?	☑	☐
b) Attach weekly inspection forms (BMP and stormwater forms)?	☑	☐
c) Note any correction of defects below?	☑	☐
d) Weekly stormwater form?	☑	☐

Comments: No Damage or Discharge. BMPs in Good Condition. Repair Made As Needed

Dust maintenance and monitoring: 1. 0.00 2. 0.07 3. 0.01
Water Truck Used For Dust Suppression On As Need Bases

(note if dust suppression is applied)

Mike Lilo / [signature]
Name / Signature

1-20-16
Date

CBMPP INSPECTION FIELD REPORT LOG

Contractor Name: Taylor Corp
Site Name: OU-3 Remedial Action Specific Area: Borrow Area, PCB Cell, C+D
Site Location (City, County, State): Anniston, Calhoun County, Alabama

Date: 1-20-16 **Weather Conditions:** Temp: Min 33° Max 47°
Description (Sunny, Cloudy, Overcast, etc)
Precipitation: 0.08 Inches

Work Performed Today (Indicate location and description of work performed and note any safety issues or deviations from the H&S plan):

Borrow Area - Screen Dirt, Hauled Soil to PCB Area
PCB Cells - Continued to Grade Hauled Soil / Had Depth Check
C+D - None

BMP maintenance and inspection:	Yes	No
a) Inspection of engineering controls performed (ea. week and after rainfall)?	☑	☐
b) Attach weekly inspection forms (BMP and stormwater forms)?	☑	☐
c) Note any correction of defects below?	☑	☐
d) Weekly stormwater form?	☑	☐

Comments: No Damage or Discharge. BMPs in Good Condition. Repair Made As Needed

Dust maintenance and monitoring: N/A Rain Day
Water Truck Used For Dust Suppression on As Need Bases

(note if dust suppression is applied)

Mike Lilio / Mike Lilio
Name / Signature

1-21-16
Date

CBMPP INSPECTION FIELD REPORT LOG

Contractor Name: Taylor Corp
Site Name: OU-3 Remedial Action Specific Area: Borrow Area, PCB Cells, C+D
Site Location (City, County, State): Anniston, Calhoun County, Alabama

Date: 1-21-16 **Weather Conditions:** Temp: Min 42° Max 52°
Description (Sunny, Cloudy, Overcast, etc)
Precipitation: 0.59 Inches

Work Performed Today (Indicate location and description of work performed and note any safety issues or deviations from the H&S plan):

Borrow Area - To Muddy to Screen Dirt / Screen Down / Working on Machinery
PCB Cells - Pulling Strawbags and Plastic, Prep for Final stage of Area
C+D - Re-Sloping Trench / Excavation / Reinforcing BMP's

	Yes	No
BMP maintenance and inspection:		
a) Inspection of engineering controls performed (ea. week and after rainfall)?	☑	☐
b) Attach weekly inspection forms (BMP and stormwater forms)?	☑	☐
c) Note any correction of defects below?	☑	☐
d) Weekly stormwater form?	☑	☐

Comments: No Damage or Discharge. BMPs in Stable Condition. Repair Made As Needed.

Dust maintenance and monitoring: 0.57 / Rained After so Brought Monitor in.
Water Trucks Used for Dust Suppression on As Needed Bases

(note if dust suppression is applied)

Mike Lilo / [signature]
Name / Signature

1/22/16
Date

CBMPP INSPECTION FIELD REPORT LOG

Contractor Name: Taylor Corp
Site Name: OU-3 Remedial Action
Specific Area: Borrow Area, PCB Cell, C+D
Site Location (City, County, State): Anniston, Calhoun County, Alabama

Date: 1-22-16

Weather Conditions: Temp: Min 30' Max 53'
Description (Sunny, Cloudy, Overcast, etc) Cloudy / Rainy
Precipitation: 0.76 Inches

Work Performed Today (Indicate location and description of work performed and note any safety issues or deviations from the H&S plan):

Borrow Area - Did not work due to Rainy Conditions
PCB Cells - Did not work / No soil could be processed for covering Area.
C+D - Continued Finishing Slopings, Etc. for desired water Runoff.

BMP maintenance and inspection:	Yes	No
a) Inspection of engineering controls performed (ea. week and after rainfall)?	☑	☐
b) Attach weekly inspection forms (BMP and stormwater forms)?	☑	☐
c) Note any correction of defects below?	☑	☐
d) Weekly stormwater form?	☑	☐

Comments: No damage or discharge. BMPs in Good Condition. Repairs made as needed.

Dust maintenance and monitoring: No monitoring due to Rain
Water Truck used for dust suppression on as need bases.

(note if dust suppression is applied)

Mike Lilly
Name / Signature

1-22-16
Date

STORMWATER INSPECITON AND MAINTENANCE REPORT FORM

Site Name: Anniston PCB Site, OU-3 Remedial Action Cover Systems

Site Location: Anniston, Calhoun County, Alabama

NPDES Permit Number: Not Applicable

Weekly Rainfall Summary:

Day:	Sun	Mon	Tues	Wed	Thurs	Fri	Sat
Date:	1-24-16	1-25-16	1-26-16	1-27-16	1-28-16	1-29-16	1-30-16
Rainfall:	Ø	Ø	0.72	0.03	Ø	Ø	Ø

Sampling Information:

- **Sample Type:** N/A
- **Location:**
- **Analysis:**

Inspection Results: BMPS structurally sound

- **Deficiencies or Required Maintenance:** Maintenance Required on Screener
- **Planned Corrective Action:** Rent new one
- **Corrective Action Schedule:** New screen delivered 1-28-16
- **Other Comments:**

Signature 1-31-16 **Date**

CBMPP INSPECTION FIELD REPORT LOG

Contractor Name: TAYLOR CORP
Site Name: OU-3 Remedial Action
Site Location (City, County, State): Anniston, Calhoun County, Alabama
Specific Area: BORROW AREA/PCB CELL/C+D

Date: 1-25-16

Weather Conditions: Temp: Min 29° Max 61°
Description (Sunny, Cloudy, Overcast, etc) SUNNY
Precipitation: 0.00 Inches

Work Performed Today (Indicate location and description of work performed and note any safety issues or deviations from the H&S plan):

BORROW AREA - NOT WORKED/SPECIALISTS WORKING ON FIXING SCREEN.. ETC
PCB CELL - REMOVING SANDBAGS / ROLLING BACK PLASTIC
C+D - NOT WORKED

BMP maintenance and inspection:	Yes	No
a) Inspection of engineering controls performed (ea. week and after rainfall)?	☑	☐
b) Attach weekly inspection forms (BMP and stormwater forms)?	☑	☐
c) Note any correction of defects below?	☑	☐
d) Weekly stormwater form?	☑	☐

Comments: BMPS STRUCTURE HAS MAINTAINED, NO DISCHARGE OR DAMAGE DURING THE RECORDED RAIN EVENT ON 1-22-16 (0.76)

Dust maintenance and monitoring: 3. 0.007 ONLY MONITOR USED DUE TO WORKERS BEING THAT AREA
3.1 · 0.000
WATER TRUCK USED AS NEEDED TO SUPPRESS DUST ON ROADS

(note if dust suppression is applied)

MIKE LILLO / [signature]
Name / Signature

1-26-16
Date

CBMPP INSPECTION FIELD REPORT LOG

Contractor Name: Taylor Corp
Site Name: OU-3 Remedial Action
Site Location (City, County, State): Anniston, Calhoun County, Alabama
Specific Area: Borrow Area/PCB Cell/C+D

Date: 1-26-16

Weather Conditions: Temp: Min. 50° Max 60°
Description (Sunny, Cloudy, Overcast, etc) RAIN
Precipitation: 0.72 Inches

Work Performed Today (Indicate location and description of work performed and note any safety issues or deviations from the H&S plan):

Borrow Area - Waiting on Screen and Cleaning out excess dirt for screener to start.
PCB Cell - Continuing to Remove and stack sandbags/ Digging Trench for water line
C+D - N/A

BMP maintenance and inspection:

	Yes	No
a) Inspection of engineering controls performed (ea. week and after rainfall)?	☑	☐
b) Attach weekly inspection forms (BMP and stormwater forms)?	☑	☐
c) Note any correction of defects below?	☐	☐
d) Weekly stormwater form?	☑	☐

Comments: BMPs are in good condition, No Discharges or Damage.

Dust maintenance and monitoring: 1. 0.000
2. N/A
3. 0.015

Water Truck used as needed for dust suppression

(note if dust suppression is applied)

Name / Signature

1-27-16
Date

CBMPP INSPECTION FIELD REPORT LOG

Contractor Name: Taylor Corp
Site Name: OU-3 Remedial Action
Site Location (City, County, State): Anniston, Calhoun County, Alabama
Specific Area: Borrow Area / PCB Cell / C+D

Date: 1-27-16

Weather Conditions: Temp: Min 35° Max 50°
Description (Sunny, Cloudy, Overcast, etc) OVERCAST
Precipitation: 0.03 Inches

Work Performed Today (Indicate location and description of work performed and note any safety issues or deviations from the H&S plan):

Borrow Area - Not worked
PCB Cell - Temps Removing Sandbags and plastic
C+D - Not worked
Area A - Hot works permit to remove fencing / Groundwater continued at old Tarmac site

BMP maintenance and inspection:

	Yes	No
a) Inspection of engineering controls performed (ea. week and after rainfall)?	☑	☐
b) Attach weekly inspection forms (BMP and stormwater forms)?	☑	☐
c) Note any correction of defects below?	☑	☐
d) Weekly stormwater form?	☑	☐

Comments: BMPs are in good condition, no discharge, will repair as needed

Dust maintenance and monitoring: 2 = 0.031
2.1 = 0.014
3 = 0.019
Water truck used as needed for dust suppression
(note if dust suppression is applied)

Mike Lillo / Mike Lillo
Name / Signature

1-28-16
Date

CBMPP INSPECTION FIELD REPORT LOG

Contractor Name: Taylor Corp
Site Name: OU-3 Remedial Action
Site Location (City, County, State): Anniston, Calhoun County, Alabama
Specific Area: Borrow Area / PCB Cells / C+D

Date: 1-28-16

Weather Conditions: Temp: Min 32° Max 57°
Description (Sunny, Cloudy, Overcast, etc) Cloudy / Sunny
Precipitation: 0.00 Inches

Work Performed Today (Indicate location and description of work performed and note any safety issues or deviations from the H&S plan):

Borrow Area - New Screen Delivered / New Screen Down Approximately 3:10 PM
PCB Cells - Continue Removing Sandbags / Plastic .. Pushing Dirt to open Mode. Road Stable
C+D - Not Worked
Area A - Disc Ground / put silt Fencing outside Area Main Fence on Clydesdale Rd

BMP maintenance and inspection:	Yes	No
a) Inspection of engineering controls performed (ea. week and after rainfall)?	☑	☐
b) Attach weekly inspection forms (BMP and stormwater forms)?	☑	☐
c) Note any correction of defects below?	☑	☐
d) Weekly stormwater form?	☑	☐

Comments: BMPs in good condition. No Discharge. Repair if needed

Dust maintenance and monitoring: 1. 0.00
2. 0.20
3. 0.32

Water Truck used as needed for dust suppression

(note if dust suppression is applied)

Mike L.L.O / [signature]
Name / Signature

1-29-16
Date

CBMPP INSPECTION FIELD REPORT LOG

Contractor Name: Taylor Corp
Site Name: OU-3 Remedial Action
Specific Area: Borrow Area, PCB Cells, C+D
Site Location (City, County, State): Anniston, Calhoun County, Alabama

Date: 1-29-16

Weather Conditions: Temp: Min 34° Max 58°
Description (Sunny, Cloudy, Overcast, etc) Sunny
Precipitation: 0.00 Inches

Work Performed Today (Indicate location and description of work performed and note any safety issues or deviations from the H&S plan):

Borrow Area - Stockpiling screened soil for upcoming use
PCB Cells - Truck loads of Hauled in soil for use to cover PCB Area tests cleared
C+D - Not worked
Old Discharge Site being worked laying ground water piping connected to small Site Building. Insulating and covering with dirt per requirements.

BMP maintenance and inspection:

	Yes	No
a) Inspection of engineering controls performed (ea. week and after rainfall)?	☑	☐
b) Attach weekly inspection forms (BMP and stormwater forms)?	☑	☐
c) Note any correction of defects below?	☑	☐
d) Weekly stormwater form?	☑	☐

Comments: BMPs have no structural damage and no discharge. Repairs made if identified.

Dust maintenance and monitoring: 1. 0.00
2. 0.014
3. 0.004

Water Truck used as needed for dust suppression

(note if dust suppression is applied)

Mike Lilo / Mike Lilo
Name / Signature

1-30-16
Date

CBMPP INSPECTION FIELD REPORT LOG

Contractor Name: TAYLOR CORP
Site Name: OU-3 Remedial Action
Site Location (City, County, State): Anniston, Calhoun County, Alabama
Specific Area: BORROW AREA, PCB CELLS, C+D

Date: 1-30-16

Weather Conditions: Temp: Min 32° Max 69°
Description (Sunny, Cloudy, Overcast, etc)
Precipitation: 0 Inches

Work Performed Today (Indicate location and description of work performed and note any safety issues or deviations from the H&S plan):

BORROW AREA - SCREEN DIRT, CARRIED SOIL TO PCB AREA AS NEEDED
PCB CELLS - PUSHED SOIL TO COVER PCB AREA
C+D - NOT WORKED

BMP maintenance and inspection:	Yes	No
a) Inspection of engineering controls performed (ea. week and after rainfall)?	☑	☐
b) Attach weekly inspection forms (BMP and stormwater forms)?	☑	☐
c) Note any correction of defects below?	☑	☐
d) Weekly stormwater form?	☑	☐

Comments: BMPS ARE IN GOOD CONDITION, NO DISCHARGE, REPAIRS MADE AS NEEDED

Dust maintenance and monitoring: NO MONITORS OUT ON WEEKENDS

WATER TRUCK USED AS NEEDED FOR SUPPRESSING ANY DUST ACCUMULATION
(note if dust suppression is applied)

Name/Signature

1-31-16
Date

STORMWATER INSPECITON AND MAINTENANCE REPORT FORM

Site Name: Anniston PCB Site, OU-3 Remedial Action Cover Systems

Site Location: Anniston, Calhoun County, Alabama

NPDES Permit Number: Not Applicable

Weekly Rainfall Summary:

Day:	Sun	Mon	Tues	Wed	Thurs	Fri	Sat
Date:	1/31/16						
Rainfall:	Ø						

Sampling Information:

- **Sample Type:**
- **Location:**
- **Analysis:**

NA

Inspection Results:

- **Deficiencies or Required Maintenance:**
- **Planned Corrective Action:**
- **Corrective Action Schedule:**

AS NEEDED

- **Other Comments:**

2-1-16

Signature **Date**

CBMPP INSPECTION FIELD REPORT LOG

Contractor Name: Taylor Corp
Site Name: OU-3 Remedial Action
Site Location (City, County, State): Anniston, Calhoun County, Alabama
Specific Area: Borrow Area, PCB Cells

Date: 1-31-16

Weather Conditions: Temp: Min 45° Max 70°
Description (Sunny, Cloudy, Overcast, etc) Cloudy
Precipitation: 0.00 Inches

Work Performed Today (Indicate location and description of work performed and note any safety issues or deviations from the H&S plan):

Borrow Area - Screened Dirt, Hauling Soil to PCB Cell
PCB Cell - Continuing to cover area with soil
C+D - Not working

BMP maintenance and inspection:

	Yes	No
a) Inspection of engineering controls performed (ea. week and after rainfall)?	☑	☐
b) Attach weekly inspection forms (BMP and stormwater forms)?	☑	☐
c) Note any correction of defects below?	☑	☐
d) Weekly stormwater form?	☑	☐

Comments: BMPs have no damage or discharge, Repairs made as needed

Dust maintenance and monitoring: No monitoring done on weekend
Water truck used for dust suppression
(note if dust suppression is applied)

Mike L. Lio / [signature]
Name / Signature

2-1-16
Date

STORMWATER INSPECITON AND MAINTENANCE REPORT FORM

Site Name: Anniston PCB Site, OU-3 Remedial Action Cover Systems

Site Location: Anniston, Calhoun County, Alabama

NPDES Permit Number: Not Applicable

Weekly Rainfall Summary:

Day:	Sun	Mon	Tues	Wed	Thurs	Fri	Sat
Date:	1-31-16	2-1-16	2-2-16	2-3-16	2-4-16	2-5-16	2-6-16
Rainfall:	Ø	0.02	0.06	0.86	Ø	Ø	Ø

Sampling Information: None

- **Sample Type:**
- **Location:**
- **Analysis:**

Inspection Results:

- **Deficiencies or Required Maintenance:** Minimum Maintenance / Need Equipment + Manuals
- **Planned Corrective Action:** Manuals Have been ordered
- **Corrective Action Schedule:** As soon As they Arrive will install them in Equipment As needed
- **Other Comments:**

Signature

2/8/16
Date

CBMPP INSPECTION FIELD REPORT LOG

Contractor Name: TAMUZ Corp
Site Name: OU-3 Remedial Action Specific Area: Borrow Area, PCB Cells
Site Location (City, County, State): Anniston, Calhoun County, Alabama

Date: 2-1-16 **Weather Conditions:** Temp: Min 52° Max 73°
Description (Sunny, Cloudy, Overcast, etc) Sunny
Precipitation: 0.02 Inches

Work Performed Today (Indicate location and description of work performed and note any safety issues or deviations from the H&S plan):

Borrow Area - Screen Dirt Hauled Soil to PCB Cells
PCB Cells - Continued to Make Dirt And Cover PCB Cell with Hauled Soil
C+D - Not Worke
Laydown Site - Continued Ground Water And Trenching For Pipe

	Yes	No
BMP maintenance and inspection:		
a) Inspection of engineering controls performed (ea. week and after rainfall)?	☑	☐
b) Attach weekly inspection forms (BMP and stormwater forms)?	☑	☐
c) Note any correction of defects below?	☑	☐
d) Weekly stormwater form?	☑	☐

Comments: BMPs Have No Damage or Discharge. Repair As Needed.

Dust maintenance and monitoring: No Monitors due to Rain (light) but throughout the day off and

Water Truck Used For Dust Suppression

(note if dust suppression is applied)

Mike Collo
Name / Signature

2-2-16
Date

CBMPP INSPECTION FIELD REPORT LOG

Contractor Name: Taylor Corp
Site Name: OU-3 Remedial Action Specific Area: Borrow Area, PCB Cells, C+D
Site Location (City, County, State): Anniston, Calhoun County, Alabama

Date: 2-2-16 **Weather Conditions:** Temp: Min 53° Max 77°
Description (Sunny, Cloudy, Overcast, etc) Sunny
Precipitation: 0.06 Inches

Work Performed Today (Indicate location and description of work performed and note any safety issues or deviations from the H&S plan):

Borrow Area - Screened Dirt, Fixing Old Screener with Replacement Parts/Welding
PCB Cells - Continued to Move Dirt and Cover Cells with Hauled Soil
C+D - Not Worked
Recharge Site - Continued ground water and Trenching

BMP maintenance and inspection:	Yes	No
a) Inspection of engineering controls performed (ea. week and after rainfall)?	☑	☐
b) Attach weekly inspection forms (BMP and stormwater forms)?	☑	☐
c) Note any correction of defects below?	☑	☐
d) Weekly stormwater form?	☑	☐

Comments: BMPs on PCB Cells were damaged due to underground trapped water discharges and knocked down a section of silt fence. Repairs were made accordingly

Dust maintenance and monitoring 1. 0.00
2. 0.012
3. 0.016

Water Truck used for Dust Suppression

(note if dust suppression is applied)

Mike Lillo / Mike Lillo
Name / Signature

2-3-16
Date

CBMPP INSPECTION FIELD REPORT LOG

Contractor Name: Taylor Corp
Site Name: OU-3 Remedial Action Specific Area: Borrow Area, PCB Cell, C+D
Site Location (City, County, State): Anniston, Calhoun County, Alabama

Date: 2-3-16

Weather Conditions: Temp: Min 46° Max 71°
Description (Sunny, Cloudy, Overcast, etc) Overcast
Precipitation 0.86 Inches

Work Performed Today (Indicate location and description of work performed and note any safety issues or deviations from the H&S plan):

Borrow Area - Not Worked
PCB Cell - Not Worked
C+D - Not Worked
Tathance Site - Continued to work ground water piping to building

BMP maintenance and inspection:	Yes	No
a) Inspection of engineering controls performed (ea. week and after rainfall)?	☑	☐
b) Attach weekly inspection forms (BMP and stormwater forms)?	☑	☐
c) Note any correction of defects below?	☑	☐
d) Weekly stormwater form?	☑	☐

Comments: BMPs And Silt Fence Damaged in PCB Cells And outside of Area A Fence. Jason + Mike took some of the Existing Silt Fence out + Replaced with Alternative Solution Against Fence.

Dust maintenance and monitoring: No Monitoring due to Rain

Water Truck Used For Dust Suppression

(note if dust suppression is applied)

Mike Lalio / [signature]
Name / Signature

2-4-16
Date

CBMPP INSPECTION FIELD REPORT LOG

Contractor Name: Taylor Corp
Site Name: OU-3 Remedial Action Specific Area: Borrow Area, PCB Cell, CTD
Site Location (City, County, State): Anniston, Calhoun County, Alabama

Date: 2-4-16 **Weather Conditions:** Temp: Min 38° Max 51°
Description (Sunny, Cloudy, Overcast, etc) Cloudy
Precipitation: 0 Inches

Work Performed Today (Indicate location and description of work performed and note any safety issues or deviations from the H&S plan):

Borrow Area -
PCB Cells -
CTD
Tailwater Site - ground water piping complete underground, continue to to push Building with piping

BMP maintenance and inspection:	Yes	No
a) Inspection of engineering controls performed (ea. week and after rainfall)?	☑	☐
b) Attach weekly inspection forms (BMP and stormwater forms)?	☑	☐
c) Note any correction of defects below?	☑	☐
d) Weekly stormwater form?	☑	☐

Comments: Silt Fence Repaired in PCB Cell, Rip Rap Still Needed to be Fixed in that Area Still to soft of ground

Dust maintenance and monitoring: 1. 0.000
2. 0.007
3. 0.006

Water Truck used for Dust Suppression

(note if dust suppression is applied)

Mike Lilo
Name / Signature

2-5-16
Date

CBMPP INSPECTION FIELD REPORT LOG

Contractor Name: Taylor Corp
Site Name: OU-3 Remedial Action Specific Area: Borrow Area / PCB Cells / CTD
Site Location (City, County, State): Anniston, Calhoun County, Alabama

Date: 2-5-16

Weather Conditions: Temp: Min 30° Max 50°
Description (Sunny, Cloudy, Overcast, etc) Overcast
Precipitation: Ø Inches

Work Performed Today (Indicate location and description of work performed and note any safety issues or deviations from the H&S plan):

Borrow Area - Replacing Panels to Screen
PCB Cells - Moved Soil to Cap off PCB Cells, Started Rip Rap
CTD - Not Worked
Ground Water at Lathrage - Crew continued to plum piping from Building to Vault

	Yes	No
BMP maintenance and inspection:		
a) Inspection of engineering controls performed (ea. week and after rainfall)?	☑	☐
b) Attach weekly inspection forms (BMP and stormwater forms)?	☑	☐
c) Note any correction of defects below?	☑	☐
d) Weekly stormwater form?	☑	☐

Comments: BMPS HAVE BEEN REPAIRED, NO DISCHARGE, WILL REPAIR AS NEEDED IN ANY EVENT OF WEATHER

Dust maintenance and monitoring: 1. 0.00 2. 0.028 3. 0.002

WATER TRUCK USED FOR DUST SUPPRESSION AS NEEDED

(note if dust suppression is applied)

Mike Glad / [signature]
Name / Signature

2-6-15
Date

CBMPP INSPECTION FIELD REPORT LOG

Contractor Name: Taylor Corp
Site Name: OU-3 Remedial Action
Specific Area: Borrow Area / PCB Cells / C+D
Site Location (City, County, State): Anniston, Calhoun County, Alabama

Date: 2-6-16

Weather Conditions: Temp: Min 28° Max 57°
Description (Sunny, Cloudy, Overcast, etc) Sunny
Precipitation: 0 Inches

Work Performed Today (Indicate location and description of work performed and note any safety issues or deviations from the H&S plan):

Borrow Area - Continued to fix screen
PCB Cells - Rip Rap continued, Dirt also continued for cap on cells
C+D - Not worked
Continued to work at Groundwater site to plum piping to second vault

	Yes	No
BMP maintenance and inspection:		
a) Inspection of engineering controls performed (ea. week and after rainfall)?	☑	☐
b) Attach weekly inspection forms (BMP and stormwater forms)?	☑	☐
c) Note any correction of defects below?	☑	☐
d) Weekly stormwater form?	☑	☐

Comments: BMPs Holding up, no discharge or damage, will repair as needed

Dust maintenance and monitoring: No Monitors

Water truck used for suppressing dust control

(note if dust suppression is applied)

Mike Lilio / [signature]
Name / Signature

2-8-16
Date

STORMWATER INSPECITON AND MAINTENANCE REPORT FORM

Site Name: Anniston PCB Site, OU-3 Remedial Action Cover Systems

Site Location: Anniston, Calhoun County, Alabama

NPDES Permit Number: Not Applicable

Weekly Rainfall Summary:

Day:	Sun	Mon	Tues	Wed	Thurs	Fri	Sat
Date:	2/7/16	2/8/16	2/9/16	2/10/16	2/11/16	2/12/16	2/13/16
Rainfall:	Ø	Ø	TRACE	TRACE	Ø	Ø	Ø

Sampling Information:

- **Sample Type:** N/A
- **Location:**
- **Analysis:**

Inspection Results:

- **Deficiencies or Required Maintenance:** DEFICIENT EXISTING GROUND WATER LINE LEAK SOUTH OF PCB CELL LEADING ACROSS HWY 202 INTO THE ALEMITH DIKE.
- **Planned Corrective Action:** FIND EACH SOURCE OF THE LEAK AND MAKE NECESSARY REPAIRS OR REPLACEMENTS AS NEEDED.
- **Corrective Action Schedule:** ACTIVE PERMIT 2/15/16 UNTIL REMEDIATED.
- **Other Comments:**

Signature

2/15/16
Date

CBMPP INSPECTION FIELD REPORT LOG

Contractor Name: Taylor Corp
Site Name: OU-3 Remedial Action
Specific Area: Borrow Area, PCB Cells, CTD
Site Location (City, County, State): Anniston, Calhoun County, Alabama

Date: 2/8/16

Weather Conditions: Temp: Min 31° Max 54°
Description (Sunny, Cloudy, Overcast, etc) Cloudy
Precipitation: 0 Inches

Work Performed Today (Indicate location and description of work performed and note any safety issues or deviations from the H&S plan):

Borrow Area - Continuing to stockpile soil ready for hauling to Area A
PCB Cells - Continuing to build rip rap, and preparing cell for top soil
CTD - Not worked

BMP maintenance and inspection:	Yes	No
a) Inspection of engineering controls performed (ea. week and after rainfall)?	☑	☐
b) Attach weekly inspection forms (BMP and stormwater forms)?	☑	☐
c) Note any correction of defects below?	☑	☐
d) Weekly stormwater form?	☑	☐

Comments: BMPs have had some reinforced poles and s/k fence replaced in certain areas, all are holding up, will repair as needed

Dust maintenance and monitoring: 1. 0.05 2. 0.056 3. 0.019

Water truck used for dust suppression as needed.

(note if dust suppression is applied)

Mike Lisa / Mike Lisa
Name / Signature

2/9/16
Date

CBMPP INSPECTION FIELD REPORT LOG

Contractor Name: TAYLOR Corp
Site Name: OU-3 Remedial Action
Specific Area: BORROW AREA, PCB CELL, GROUND WATER
Site Location (City, County, State): Anniston, Calhoun County, Alabama

Date: 2/9/16

Weather Conditions: Temp: Min 27 Max 39
Description (Sunny, Cloudy, Overcast, etc) Cloudy overcast
Precipitation: 1.11 Inches

Work Performed Today (Indicate location and description of work performed and note any safety issues or deviations from the H&S plan):

BORROW AREA - CONTINUING TO STOCKPILE SOIL FOR HAULING TO AREA A WHEN NEEDED.
PCB CELL - CONTINUING TO SPREAD TOP SOIL TO COVER CELL / RIP RAP WORK BEING DONE.
GROUND WATER - INSIDE SOUTH LAND FILL CONTINUING TO FIND ANY OTHER LEAKAGE OR ANYTHING OBSTRUCTING THE REGULAR FLOW OF WATER

BMP maintenance and inspection:	Yes	No
a) Inspection of engineering controls performed (ea. week and after rainfall)?	☑	☐
b) Attach weekly inspection forms (BMP and stormwater forms)?	☑	☐
c) Note any correction of defects below?	☑	☐
d) Weekly stormwater form?	☑	☐

Comments: NO DISCHARGE, NO DAMAGE TO BMPS, WILL REPAIR AS NEEDED.

Dust maintenance and monitoring: 1. 0.00
2. 0.032
3. 0.003
WATER TRUCK USED FOR DUST SUPPRESSION.

(note if dust suppression is applied)

MIKE L. LIO / [signature]
Name / Signature

2-10-16
Date

CBMPP INSPECTION FIELD REPORT LOG

Contractor Name: TAYLOR CORP
Site Name: OU-3 Remedial Action Specific Area: BORROW AREA, PCB CELL, GW, AREA A
Site Location (City, County, State): Anniston, Calhoun County, Alabama

Date: 2/10/16

Weather Conditions: Temp: Min 21° Max 41°
Description (Sunny, Cloudy, Overcast, etc) Cloudy
Precipitation: T 0 Inches

Work Performed Today (Indicate location and description of work performed and note any safety issues or deviations from the H&S plan):

BORROW AREA - CONTINUING TO STOCKPILE SOIL FOR USE IN AREA A
PCB CELL - CONTINUING TO SPREAD SOIL ACROSS CELL / RIP RAP ALSO CONTINUING
AREA A - SURVEYORS COMPLETE WITH LASER SCAN OF AREA A
GROUND WATER SOUTH OF PCB CELLS CONTINUING TO BE WORKED AND FINDING ANY ADDITIONAL LEAKS.

BMP maintenance and inspection:	Yes	No
a) Inspection of engineering controls performed (ea. week and after rainfall)?	☑	☐
b) Attach weekly inspection forms (BMP and stormwater forms)?	☑	☐
c) Note any correction of defects below?	☑	☐
d) Weekly stormwater form?	☑	☐

Comments: BMPS ARE IN GOOD CONDITION, NO DISCHARGE

Dust maintenance and monitoring: 1. 0.00
2. 0.059
3. 0.022

WATER TRUCK USED FOR DUST SUPPRESSION

(note if dust suppression is applied)

MIKE WILLIS
Name / Signature

2/11/16
Date

CBMPP INSPECTION FIELD REPORT LOG

Contractor Name: Taylor Corp
Site Name: OU-3 Remedial Action
Specific Area: Borrow Area, PCB Cells, GW, CTD
Site Location (City, County, State): Anniston, Calhoun County, Alabama

Date: 2-11-16

Weather Conditions: Temp: Min 26° Max 58°
Description (Sunny, Cloudy, Overcast, etc) Sunny
Precipitation: 0.00 Inches

Work Performed Today (Indicate location and description of work performed and note any safety issues or deviations from the H&S plan):

Borrow Area - Continuing to Stockpile Soil for use in Area A
PCB Cell - Covering Cells with Top Soil, Finishing Rip Rap Around PCB Cell
Ground Water South of PCB as indicated to Cap off Existing Lines until
Better Solution has been Established.
CTD - Not Worked.

BMP maintenance and inspection:

	Yes	No
a) Inspection of engineering controls performed (ea. week and after rainfall)?	☑	☐
b) Attach weekly inspection forms (BMP and stormwater forms)?	☑	☐
c) Note any correction of defects below?	☑	☐
d) Weekly stormwater form?	☑	☐

Comments: BMPs have no damage or discharge

Dust maintenance and monitoring: 1 0.00
2 0.027
3 0.037

Water truck used as needed for dust suppression.

(note if dust suppression is applied)

Milé Lilio / [signature]
Name / Signature

2-12-16
Date

CBMPP INSPECTION FIELD REPORT LOG

Contractor Name: Taylor Corp
Site Name: OU-3 Remedial Action Specific Area: Borrow Area, PCB Cells, GW, etc
Site Location (City, County, State): Anniston, Calhoun County, Alabama

Date: 2-12-16

Weather Conditions: Temp: Min 38° Max 65°
Description (Sunny, Cloudy, Overcast, etc) Sunny
Precipitation: 0 Inches

Work Performed Today (Indicate location and description of work performed and note any safety issues or deviations from the H&S plan):

Borrow Area - Stockpiling Soil For Future use At Area A
PCB Cells - Continuing to cover cells with Remainder of necessary loads, Rip Rap Also Continued.
Area A - Surveyors Back For Additional Surveying

BMP maintenance and inspection:	Yes	No
a) Inspection of engineering controls performed (ea. week and after rainfall)?	☑	☐
b) Attach weekly inspection forms (BMP and stormwater forms)?	☑	☐
c) Note any correction of defects below?	☑	☐
d) Weekly stormwater form?	☑	☐

Comments: BMPs Are In Good Condition And No Discharge. Repair As Needed.

Dust maintenance and monitoring: 1. 0.005
2. 0.075
3. 0.068

Water Truck Used For Dust Suppression

(note if dust suppression is applied)

Mike Lido
Name / Signature

2-13-16
Date

CBMPP INSPECTION FIELD REPORT LOG

Contractor Name: Taylor Corp
Site Name: OU-3 Remedial Action Specific Area: Borrow Area
Site Location (City, County, State): Anniston, Calhoun County, Alabama

Date: 2/13/16

Weather Conditions: Temp: Min 28° Max 44°
Description (Sunny, Cloudy, Overcast, etc) Sunny
Precipitation: 0 Inches

Work Performed Today (Indicate location and description of work performed and note any safety issues or deviations from the H&S plan):

Borrow Area - Continued to work and stockpile soil for future use on Area A., etc.

BMP maintenance and inspection:	Yes	No
a) Inspection of engineering controls performed (ea. week and after rainfall)?	☑	☐
b) Attach weekly inspection forms (BMP and stormwater forms)?	☑	☐
c) Note any correction of defects below?	☑	☐
d) Weekly stormwater form?	☑	☐

Comments: BMP's are good no damage as of yet will assess each day and make repairs as needed.

Dust maintenance and monitoring: No minitor

Water truck used as needed for dust suppression.

(note if dust suppression is applied)

Mike Lee
Name / Signature

2/15/16
Date

STORMWATER INSPECITON AND MAINTENANCE REPORT FORM

Site Name: Anniston PCB Site, OU-3 Remedial Action Cover Systems

Site Location: Anniston, Calhoun County, Alabama

NPDES Permit Number: Not Applicable

Weekly Rainfall Summary:

Day:	Sun	Mon	Tues	Wed	Thurs	Fri	Sat
Date:	2-14-16	2-15-16	2-16-16	2-17-16	2-18-16	2-19-16	2-20-16
Rainfall:	Ø	1.56	Ø	Ø	Ø	Ø	Ø

Sampling Information:

- **Sample Type:**
- **Location:**
- **Analysis:**

N/A

Inspection Results:

- **Deficiencies or Required Maintenance:** BMPS NEEDED EXTRA REINFORCEMENT DUE TO THIS WEEKS RAIN AND NEXT WEEKS RAIN EVENTS
- **Planned Corrective Action:** PUT EXTRA WADDLES AND RE-STAPLE SILT FENCE THAT HAS BEEN RIPPED DUE TO MUDSLIDES HITTING THE FENCE.
- **Corrective Action Schedule:** 2-19-16 UNTIL ITS DONE.
- **Other Comments:** WAITING TO SEE RESULTS OF RAIN EVENT 2/22/16 - 2/23/16 BEFORE ATTEMPTING ADDITIONAL REPAIRS

[signature] 2/23/16

Signature **Date**

CBMPP INSPECTION FIELD REPORT LOG

Contractor Name: Taylor Corp
Site Name: OU-3 Remedial Action
Specific Area: Alemite, Borrow Area, South PCB
Site Location (City, County, State): Anniston, Calhoun County, Alabama

Date: 2-15-16

Weather Conditions: Temp: Min 43° Max 58°
Description (Sunny, Cloudy, Overcast, etc) OVERCAST / RAIN
Precipitation: 1.56 Inches

Work Performed Today (Indicate location and description of work performed and note any safety issues or deviations from the H&S plan):

Alemite Dike - Crew prepping for excavating to locate leaking water line
Borrow Area - Stockpiling soil for area A
South PCB Cell - Pressure testing water lines / Rained out
Work Stopped Due to incoming Thunderstorm
Rained Out at 11:00AM

BMP maintenance and inspection:	Yes	No
a) Inspection of engineering controls performed (ea. week and after rainfall)?	☑	☐
b) Attach weekly inspection forms (BMP and stormwater forms)?	☑	☐
c) Note any correction of defects below?	☑	☐
d) Weekly stormwater form?	☑	☐

Comments: BMP's in Good Condition, Not Extra Support Around Certain Areas due to Heavy Rain Event Coming Through.

Dust maintenance and monitoring: No Monitors due to Rain.

Water Truck used for Dust Suppression.

(note if dust suppression is applied)

Mark L. Lio / Mark Lio
Name / Signature

2-16-16
Date

CBMPP INSPECTION FIELD REPORT LOG

Contractor Name: Taylor Corp
Site Name: OU-3 Remedial Action
Specific Area: Alemite, South PCB, Area A, Pipe Tray
Site Location (City, County, State): Anniston, Calhoun County, Alabama

Date: 2-16-16

Weather Conditions: Temp: Min 37° Max 62°
Description (Sunny, Cloudy, Overcast, etc) OVERCAST
Precipitation: 0.001 Inches

Work Performed Today (Indicate location and description of work performed and note any safety issues or deviations from the H&S plan):

Alemite Dike - Scratches due to leak existing under pillar
South PCB cells - Frack Tanks Delivered / Continued to form pad for tanks
Area A - Prepping Fill Dumping out and cutting concrete box to input pipe
Pipe Tray - Maintenance Repair on Pipe Tray

BMP maintenance and inspection:

	Yes	No
a) Inspection of engineering controls performed (ea. week and after rainfall)?	☑	☐
b) Attach weekly inspection forms (BMP and stormwater forms)?	☑	☐
c) Note any correction of defects below?	☑	☐
d) Weekly stormwater form?	☑	☐

Comments: BMPS on PCB cells damaged, silk fence tore down due to heavy rain and no rip rap to slow it down from mudslide, Plant H

Dust maintenance and monitoring: 1. 0.00
2. Not used
3. 0.044
Water truck used for dust suppression

(note if dust suppression is applied)

Mike Lilio / M.L. [signature]
Name / Signature

2-17-16
Date

CBMPP INSPECTION FIELD REPORT LOG

Contractor Name: TAYLOR CORP
Site Name: OU-3 Remedial Action
Specific Area: AREA A, BORROW AREA, PIPE TRAY GROUND WATER AREA SOUTH PCB CELL
Site Location (City, County, State): Anniston, Calhoun County, Alabama

Date: 2-17-16

Weather Conditions: Temp: Min 37° Max 53°
Description (Sunny, Cloudy, Overcast, etc) Cloudy
Precipitation: Ø Inches

Work Performed Today (Indicate location and description of work performed and note any safety issues or deviations from the H&S plan):

AREA A - Hot Work Permit for Excavating Around Deep Well to Replace Piping
BORROW AREA - Hauling Rock for Frost Tanks Platform x 2
PIPE TRAY - Sunny Crew Repairing + Doing Maintenance to Wells

BMP maintenance and inspection:

	Yes	No
a) Inspection of engineering controls performed (ea. week and after rainfall)?	☑	☐
b) Attach weekly inspection forms (BMP and stormwater forms)?	☑	☐
c) Note any correction of defects below?	☑	☐
d) Weekly stormwater form?	☑	☐

Comments: BMPS NEED SOME REPLACING ON PCB CELLS, WILL CONTINUE TO REPAIR UNTIL FINISHED

Dust maintenance and monitoring: 1. 0.00
2. 0.066
3. 0.027

WATER TRUCK USED FOR DUST SUPPRESSION AS NEEDED.

(note if dust suppression is applied)

[signature]
Name / Signature

2-18-16
Date

CBMPP INSPECTION FIELD REPORT LOG

Contractor Name: Taylor Corp
Site Name: OU-3 Remedial Action
Specific Area: Borrow Area, Area South of PCB,
Site Location (City, County, State): Anniston, Calhoun County, Alabama

Date: 2-18-16

Weather Conditions: Temp: Min 32° Max 66°
Description (Sunny, Cloudy, Overcast, etc) Sunny
Precipitation: Ø Inches

Work Performed Today (Indicate location and description of work performed and note any safety issues or deviations from the H&S plan):

Borrow Area - Continued to screen dirt, stockpile soil for use on area A. Area South of PCB - Road is being built up again for tanks. Ground water still being worked on and plumbing for piping to frack tanks.

BMP maintenance and inspection:

	Yes	No
a) Inspection of engineering controls performed (ea. week and after rainfall)?	☑	☐
b) Attach weekly inspection forms (BMP and stormwater forms)?	☑	☐
c) Note any correction of defects below?	☑	☐
d) Weekly stormwater form?	☑	☐

Comments: BMPs around PCB cells, some are still good but the north east area will continue to be compromised as it gets the brunt of full force water knocking it down continuously.

Dust maintenance and monitoring: 1. 0.000
2. 0.083
3. 0.029

Water truck used for dust suppression

(note if dust suppression is applied)

Mike Lilio / [signature]
Name / Signature

2-19-16
Date

CBMPP INSPECTION FIELD REPORT LOG

Contractor Name: TAYLOR CORP
Site Name: OU-3 Remedial Action Specific Area: BORROW AREA, PCB CELLS, AREA A, FRAC TANKS
Site Location (City, County, State): Anniston, Calhoun County, Alabama

Date: 2/19/16

Weather Conditions: Temp: Min 39° Max 41°
Description (Sunny, Cloudy, Overcast, etc) SUNNY
Precipitation: 0 Inches

Work Performed Today (Indicate location and description of work performed and note any safety issues or deviations from the H&S plan):

ACWPA - CAME IN AND REMOVED THE WATER WELL IN AREA A
BORROW AREA - SCATTERED DIRT
PCB CELLS - CONTINUED TO FORM HAUL ROAD.
FRACK TANKS - CONTINUED TO PLUMB IN PIPING TO FRACK TANKS

	Yes	No
BMP maintenance and inspection:		
a) Inspection of engineering controls performed (ea. week and after rainfall)?	☑	☐
b) Attach weekly inspection forms (BMP and stormwater forms)?	☑	☐
c) Note any correction of defects below?	☑	☐
d) Weekly stormwater form?	☑	☐

Comments: BMPS NEEDED SOME REPAIRS, RD WADDING AND NEW T POSTS TO FIX EXISTING PROBLEMS. ON NW CORNER OF PCB CELL

Dust maintenance and monitoring: 1) 0.000
2) 0.047
3) 0.026
WATER TRUCK USED FOR DUST SUPPRESSION

(note if dust suppression is applied)

JASON JAMES
Name / Signature

2/20/16
Date

CBMPP INSPECTION FIELD REPORT LOG

Contractor Name: Taylor Corp
Site Name: OU-3 Remedial Action
Specific Area: Borrow Area, PCB Cells
Site Location (City, County, State): Anniston, Calhoun County, Alabama

Date: 2/20/16

Weather Conditions: Temp: Min 44° Max 68°
Description (Sunny, Cloudy, Overcast, etc) Cloudy
Precipitation: 0 Inches

Work Performed Today (Indicate location and description of work performed and note any safety issues or deviations from the H&S plan):

Borrow Area - Continues to screen dirt
PCB Cells - New road through the cell being formed

BMP maintenance and inspection:	Yes	No
a) Inspection of engineering controls performed (ea. week and after rainfall)?	☑	☐
b) Attach weekly inspection forms (BMP and stormwater forms)?	☑	☐
c) Note any correction of defects below?	☑	☐
d) Weekly stormwater form?	☑	☐

Comments: BMPs in good condition except north east side of PCB cell, silt fence continues to be compromised due to it having no rip rap to slow the force of water that ultimately concentrates down to that specific area.

Dust maintenance and monitoring: Weekend, no monitors.

Water truck used dust suppression as needed

(note if dust suppression is applied)

Mike Lilio / [signature]
Name / Signature

2/22/16
Date

STORMWATER INSPECITON AND MAINTENANCE REPORT FORM

Site Name: Anniston PCB Site, OU-3 Remedial Action Cover Systems

Site Location: Anniston, Calhoun County, Alabama

NPDES Permit Number: Not Applicable

Weekly Rainfall Summary:

Day:	Sun	Mon	Tues	Wed	Thurs	Fri	Sat
Date:	2-21-16	2-22-16	2-23-16	2-24-16	2-25-16	2-26-16	2-27-16
Rainfall:	.04	1.16	1.16	.78	.00	.01	.00

Sampling Information:

- **Sample Type:** N A
- **Location:**
- **Analysis:**

Inspection Results:

- **Deficiencies or Required Maintenance:** REPAIRS MADE TO AREA NW PCB CELL
- **Planned Corrective Action:** AS NEED
- **Corrective Action Schedule:** ASP NEEDED
- **Other Comments:**

Signature 2-27-16 **Date**

CBMPP INSPECTION FIELD REPORT LOG

Contractor Name: TC
Site Name: OU-3 Remedial Action Specific Area: PCB CELLS, BORROW AREA, C+D
Site Location (City, County, State): Anniston, Calhoun County, Alabama

Date: 2/21/16 **Weather Conditions:** Temp: Min 53° Max 68°
Description (Sunny, Cloudy, Overcast, etc) ~~.04~~ RAIN
Precipitation: .04 Inches

Work Performed Today (Indicate location and description of work performed and note any safety issues or deviations from the H&S plan):

DEVELOP BORROW ~~[illegible]~~ AREA
HAUL SOIL TO AREA A
GRADE ADD FILL PCB AREA AND INSTALL SERVICE ROAD PCB CELL

	Yes	No
BMP maintenance and inspection:		
a) Inspection of engineering controls performed (ea. week and after rainfall)?	☑	☐
b) Attach weekly inspection forms (BMP and stormwater forms)?	☑	☐
c) Note any correction of defects below?	☑	☐
d) Weekly stormwater form?	☑	☐

Comments: BMPS IN GOOD CONDITION
MINOR REPAIRS MADE BEFORE MAJOR PROJECTED RAIN

Dust maintenance and monitoring:

(note if dust suppression is applied)

Name / Signature

2/22/16
Date

CBMPP INSPECTION FIELD REPORT LOG

Contractor Name: TC
Site Name: OU-3 Remedial Action Specific Area: PCB CELLS, BORROW AREA, C+D
Site Location (City, County, State): Anniston, Calhoun County, Alabama

Date: 2/22/16

Weather Conditions: Temp: Min 59° Max 63°
Description (Sunny, Cloudy, Overcast, etc) T-STORM
Precipitation: 1.16 Inches

Work Performed Today (Indicate location and description of work performed and note any safety issues or deviations from the H&S plan):

No work performed

DEVELOP BORROW ~~Area~~ AREA
HAUL SOIL TO AREA A
GRADE AND FILL PCB AREA AND INSTALL SERVICE ROAD PCB CELL

	Yes	No
BMP maintenance and inspection:		
a) Inspection of engineering controls performed (ea. week and after rainfall)?	☑	☐
b) Attach weekly inspection forms (BMP and stormwater forms)?	☑	☐
c) Note any correction of defects below?	☑	☐
d) Weekly stormwater form?	☑	☐

Comments: NO WORK PERFORMED
BMPS CHECKED NO DAMAGE LIGHT DISCHARGE

Dust maintenance and monitoring:

(note if dust suppression is applied)

Name / Signature

2/23/16
Date

CBMPP INSPECTION FIELD REPORT LOG

Contractor Name: TC
Site Name: OU-3 Remedial Action
Specific Area: PCB CELLS, BORROW AREA, C+D
Site Location (City, County, State): Anniston, Calhoun County, Alabama

Date: 2/23/16

Weather Conditions: Temp: Min 57 Max 67
Description (Sunny, Cloudy, Overcast, etc) T-STORMS
Precipitation: 1.16 Inches

Work Performed Today (Indicate location and description of work performed and note any safety issues or deviations from the H&S plan):

no work performed

DEVELOP BORROW ~~[illegible]~~ ~~[illegible]~~ AREA
HAUL SOIL TO AREA A
GRADE AND FILL PCB AREA AND INSTALL SERVICE ROAD PCB CELL

	Yes	No
BMP maintenance and inspection:		
a) Inspection of engineering controls performed (ea. week and after rainfall)?	☑	☐
b) Attach weekly inspection forms (BMP and stormwater forms)?	☑	☐
c) Note any correction of defects below?	☑	☐
d) Weekly stormwater form?	☑	☐

Comments: DISCHARGE AT NW CORNER OF PCB CELL. TEMP BMPS TO SLOW FLOW

Dust maintenance and monitoring:

(note if dust suppression is applied)

[signature]
Name / Signature

2/24/16
Date

CBMPP INSPECTION FIELD REPORT LOG

Contractor Name: TC
Site Name: OU-3 Remedial Action Specific Area: PCB CELLS, BORROW AREA, C+D
Site Location (City, County, State): Anniston, Calhoun County, Alabama

Date: 2/24/16 **Weather Conditions:** Temp: Min 42° Max 65°
Description (Sunny, Cloudy, Overcast, etc) RAIN
Precipitation: .28 Inches

Work Performed Today (Indicate location and description of work performed and note any safety issues or deviations from the H&S plan):

NO WORK PERFORMED

DEVELOP BORROW ~~Soil~~ AREA
HAUL SOIL TO AREA A
GRADE ADD FILL PCB AREA AND INSTALL SERVICE ROAD PCB CELL

	Yes	No
BMP maintenance and inspection:		
a) Inspection of engineering controls performed (ea. week and after rainfall)?	☑	☐
b) Attach weekly inspection forms (BMP and stormwater forms)?	☑	☐
c) Note any correction of defects below?	☑	☐
d) Weekly stormwater form?	☑	☐

Comments: BMPS IN ALL AREA'S SCHED. FOR REPAIR ON 2/25/16 – 2/27/16
ADDITIONAL BMPS WILL BE ADDED

Dust maintenance and monitoring:

NA

(note if dust suppression is applied)

Name / Signature

2/25/16
Date

CBMPP INSPECTION FIELD REPORT LOG

Contractor Name: TC
Site Name: OU-3 Remedial Action Specific Area: PCB CELLS, BORROW AREA, C+D
Site Location (City, County, State): Anniston, Calhoun County, Alabama

Date: 2/25/16

Weather Conditions: Temp: Min 36° Max 54°
Description (Sunny, Cloudy, Overcast, etc) Cloudy
Precipitation: 0 Inches

Work Performed Today (Indicate location and description of work performed and note any safety issues or deviations from the H&S plan):

DEVELOP BORROW ~~[illegible]~~ AREA
HAUL SOIL TO AREA A
GRADE AND FILL PCB AREA AND INSTALL SERVICE ROAD PCB CELL

	Yes	No
BMP maintenance and inspection:		
a) Inspection of engineering controls performed (ea. week and after rainfall)?	☑	☐
b) Attach weekly inspection forms (BMP and stormwater forms)?	☑	☐
c) Note any correction of defects below?	☑	☐
d) Weekly stormwater form?	☑	☐

Comments: BMP'S REPAIR AND SHORING BEING MADE ON ALL AREA'S

Dust maintenance and monitoring: 1) .000 mg/m3
2) .000
3) .000
WATER TRUCK AS NEEDED
(note if dust suppression is applied)

Name / Signature

2/26/17
Date

CBMPP INSPECTION FIELD REPORT LOG

Contractor Name: TC
Site Name: OU-3 Remedial Action Specific Area: PCB CELLS, BORROW AREA, C+D
Site Location (City, County, State): Anniston, Calhoun County, Alabama

Date: 2/26/16

Weather Conditions: Temp: Min 32° Max 54°
Description (Sunny, Cloudy, Overcast, etc) CLOUDY | LIGHT RAIN
Precipitation: .01 Inches

Work Performed Today (Indicate location and description of work performed and note any safety issues or deviations from the H&S plan):

BMP... REPAIRS IN PCB.. CELL AREA
no work - DEVELOP BORROW ~~Area~~ ~~Co~~ AREA
no work - HAUL SOIL TO AREA A
GRADE AND FILL PCB AREA AND INSTALL SERVICE ROAD PCB CELL

	Yes	No
BMP maintenance and inspection:		
a) Inspection of engineering controls performed (ea. week and after rainfall)?	☑	☐
b) Attach weekly inspection forms (BMP and stormwater forms)?	☑	☐
c) Note any correction of defects below?	☑	☐
d) Weekly stormwater form?	☑	☐

Comments: BMPS INSTALLED IN AREA A
BMP REPAIR ON PCB CELL
ROAD REPAIR NEAR GW TANKS

Dust maintenance and monitoring:

NA

(note if dust suppression is applied)

Name / Signature

2/27/16
Date

CBMPP INSPECTION FIELD REPORT LOG

Contractor Name: TC
Site Name: OU-3 Remedial Action
Specific Area: PCB CELLS, BORROW AREA, C+D
Site Location (City, County, State): Anniston, Calhoun County, Alabama

Date: 2/27/16

Weather Conditions: Temp: Min 28° Max 60°
Description (Sunny, Cloudy, Overcast, etc) CLEAR
Precipitation: Ø Inches

Work Performed Today (Indicate location and description of work performed and note any safety issues or deviations from the H&S plan):

DEVELOP BORROW ~~[illegible]~~ ~~[illegible]~~ AREA
HAUL SOIL TO AREA A
GRADE AND FILL PCB AREA AND INSTALL SERVICE ROAD PCB CELL

BMP maintenance and inspection:	Yes	No
a) Inspection of engineering controls performed (ea. week and after rainfall)?	☑	☐
b) Attach weekly inspection forms (BMP and stormwater forms)?	☑	☐
c) Note any correction of defects below?	☑	☐
d) Weekly stormwater form?	☑	☐

Comments: BMP REPAIR ON MW PCB CELL AND NE PCB CELL

Dust maintenance and monitoring: ~~1) .000~~ ~~2) .000~~ ~~3) .001~~ mg/m3 NO AIR DATA
WATER TRUCK AS NEEDED

(note if dust suppression is applied)

[signature]
Name / Signature

2/28/16
Date

CBMPP INSPECTION FIELD REPORT LOG

Contractor Name: TC
Site Name: OU-3 Remedial Action Specific Area: PCB CELLS, BORROW AREA, C+D
Site Location (City, County, State): Anniston, Calhoun County, Alabama

Date: 2/29/16 **Weather Conditions:** Temp: Min 48° Max 73°
Description (Sunny, Cloudy, Overcast, etc) CLOUDY
Precipitation: 0 Inches

Work Performed Today (Indicate location and description of work performed and note any safety issues or deviations from the H&S plan):

DEVELOP BORROW [redacted] AREA
HAUL SOIL TO AREA A
GRADE ADD FILL PCB AREA AND INSTALL SERVICE ROAD PCB CELL

	Yes	No
BMP maintenance and inspection:		
a) Inspection of engineering controls performed (ea. week and after rainfall)?	☑	☐
b) Attach weekly inspection forms (BMP and stormwater forms)?	☑	☐
c) Note any correction of defects below?	☑	☐
d) Weekly stormwater form?	☑	☐

Comments: BMP's REPAIRED OR INSTALLED
NO DAMAGE OR DISCHARGE

Dust maintenance and monitoring: 1) .001 2) .000 3) .016 > mg/m³
WATER TRUCK AS NEEDED

(note if dust suppression is applied)

Name / Signature

2/29/16
Date

STORMWATER INSPECITON AND MAINTENANCE REPORT FORM

Site Name: Anniston PCB Site, OU-3 Remedial Action Cover Systems

Site Location: Anniston, Calhoun County, Alabama

NPDES Permit Number: Not Applicable

Weekly Rainfall Summary:

Day:	Sun	Mon	Tues	Wed	Thurs	Fri	Sat
Date:	2-28	2-29					
Rainfall:	.00	.00					

Sampling Information:

- **Sample Type:** NA
- **Location:**
- **Analysis:**

Inspection Results:

- **Deficiencies or Required Maintenance:**
- **Planned Corrective Action:** AS NEEDED
- **Corrective Action Schedule:**
- **Other Comments:**

Signature **Date** 2-29-16

STORMWATER INSPECITON AND MAINTENANCE REPORT FORM

Site Name: Anniston PCB Site, OU-3 Remedial Action Cover Systems

Site Location: Anniston, Calhoun County, Alabama

NPDES Permit Number: Not Applicable

Weekly Rainfall Summary:

Day:	Sun	Mon	Tues	Wed	Thurs	Fri	Sat
Date:			3-1-16	3/2/16	3/3/16	3/4/16	3/5/16
Rainfall:			.44"	0"	1.19"	0"	0"

Sampling Information:

- **Sample Type:** NA
- **Location:**
- **Analysis:**

Inspection Results:

- **Deficiencies or Required Maintenance:** REPAIR AND INSTALLATION OF MORE BMPS IN AREA A
- **Planned Corrective Action:** REPAIR on 3/4/16
- **Corrective Action Schedule:** AS NEEDED
- **Other Comments:** NO AIR DATA DUE TO RAIN AND NO WORK PERFORMED

Signature

3/6/16
Date

CBMPP INSPECTION FIELD REPORT LOG

Contractor Name: TC
Site Name: OU-3 Remedial Action Specific Area: PCB CELLS, BORROW AREA, C+D
Site Location (City, County, State): Anniston, Calhoun County, Alabama

Date: 3/1/16

Weather Conditions: Temp: Min 50° Max 72°
Description (Sunny, Cloudy, Overcast, etc) RAIN / T-STORMS
Precipitation: 1.40 Inches

Work Performed Today (Indicate location and description of work performed and note any safety issues or deviations from the H&S plan):

NO WORK PERFORMED
DEVELOP BORROW [redacted] AREA
HAUL SOIL TO AREA A
GRADE ADD FILL PCB AREA AND INSTALL SERVICE ROAD PCB CELL

	Yes	No
BMP maintenance and inspection:		
a) Inspection of engineering controls performed (ea. week and after rainfall)?	☑	☐
b) Attach weekly inspection forms (BMP and stormwater forms)?	☑	☐
c) Note any correction of defects below?	☑	☐
d) Weekly stormwater form?	☑	☐

Comments: NO DAMAGE OR DISCHARGE

Dust maintenance and monitoring:

NA

(note if dust suppression is applied)

Name / Signature

3/2/16
Date

CBMPP INSPECTION FIELD REPORT LOG

Contractor Name: TC
Site Name: OU-3 Remedial Action Specific Area: PCB CELLS, BORROW AREA, C+D
Site Location (City, County, State): Anniston, Calhoun County, Alabama

Date: 3/2/16 Weather Conditions: Temp: Min 38° Max 55°
Description (Sunny, Cloudy, Overcast, etc) CLOUDY LIGHT RAIN
Precipitation: T Inches

Work Performed Today (Indicate location and description of work performed and note any safety issues or deviations from the H&S plan):

DEVELOP BORROW [redacted] AREA - STOCK PILL
HAUL SOIL TO AREA A - NO WORK DONE
GRADE ADD FILL PCB AREA AND INSTALL SERVICE ROAD PCB CELL

BMP maintenance and inspection:	Yes	No
a) Inspection of engineering controls performed (ea. week and after rainfall)?	☑	☐
b) Attach weekly inspection forms (BMP and stormwater forms)?	☑	☐
c) Note any correction of defects below?	☑	☐
d) Weekly stormwater form?	☑	☐

Comments: STORE UP BMPS FOR POTENTIAL HEAVY RAIN ON 3/3/16

Dust maintenance and monitoring:

NO DATA

(note if dust suppression is applied)

Name / Signature

3/3/16
Date

CBMPP INSPECTION FIELD REPORT LOG

Contractor Name: TL
Site Name: OU-3 Remedial Action
Specific Area: PCB CELLS, BORROW AREA, AREA A
Site Location (City, County, State): Anniston, Calhoun County, Alabama

Date: 3/3/16

Weather Conditions: Temp: Min ____ Max ____
Description (Sunny, Cloudy, Overcast, etc) HEAVY RAIN
Precipitation: 1.19 Inches

Work Performed Today (Indicate location and description of work performed and note any safety issues or deviations from the H&S plan):

NO WORK
DEVELOP BORROW [redacted] SEE AREA
HAUL SOIL TO AREA A
GRADE ADD FILL PCB AREA AND INSTALL SERVICE ROAD PCB CELL

BMP maintenance and inspection:	Yes	No
a) Inspection of engineering controls performed (ea. week and after rainfall)?	☑	☐
b) Attach weekly inspection forms (BMP and stormwater forms)?	☑	☐
c) Note any correction of defects below?	☑	☐
d) Weekly stormwater form?	☑	☐

Comments: MILD SEDIMENT DISCHARGE FROM AREA A. MORE WADDLES WERE INSTALLED ALONG CLYSDALE ROAD ON EAST SIDE OF AREA A. MORE RUN OFF FROM WEST SIDE OF AREA A ALONG GATE. DISCHARGE WAS LITERALLY BUT WITH IN LIMITS. BMPS DID WHAT WAS INTENDED. MORE WADDLES AND SILT FENCE WILL BE PLACE PRIOR TO NEXT RAIN EVENT.

Dust maintenance and monitoring:

N/A

(note if dust suppression is applied)

Name / Signature

3/4/16
Date

CBMPP INSPECTION FIELD REPORT LOG

Contractor Name: TC
Site Name: OU-3 Remedial Action
Specific Area: PCB CELLS, BORROW AREA, AREA A
Site Location (City, County, State): Anniston, Calhoun County, Alabama

Date: 3/4/16

Weather Conditions: Temp: Min ____ Max ____
Description (Sunny, Cloudy, Overcast, etc)
Precipitation: ____ Inches

Work Performed Today (Indicate location and description of work performed and note any safety issues or deviations from the H&S plan):

no work
DEVELOP BORROW AREA
no work HAUL SOIL TO AREA A
no work GRADE ADD FILL PCB AREA AND INSTALL SERVICE ROAD PCB CELL

BMP maintenance and inspection:	Yes	No
a) Inspection of engineering controls performed (ea. week and after rainfall)?	☑	☐
b) Attach weekly inspection forms (BMP and stormwater forms)?	☑	☐
c) Note any correction of defects below?	☑	☐
d) Weekly stormwater form?	☑	☐

Comments: REPAIR AND INSTALL MORE BMP'S IN AREA A

Dust maintenance and monitoring:

(note if dust suppression is applied)

Name / Signature

3/5/16
Date

STORMWATER INSPECITON AND MAINTENANCE REPORT FORM

Site Name: Anniston PCB Site, OU-3 Remedial Action Cover Systems

Site Location: Anniston, Calhoun County, Alabama

NPDES Permit Number: Not Applicable

Weekly Rainfall Summary:

Day:	Sun	Mon	Tues	Wed	Thurs	Fri	Sat
Date:	3-13-16	3-14-16	3-15-16	3-16-16	3-17-16	3-18-16	3-19-16
Rainfall:	.21	Ø	Ø	Ø	T	Ø	T

Sampling Information:

- **Sample Type:**
- **Location:**
- **Analysis:**

NA

Inspection Results:

- **Deficiencies or Required Maintenance:** NO DEFICIENCIES OR REPAIRS NEEDED
- **Planned Corrective Action:**
- **Corrective Action Schedule:**
- **Other Comments:**

Signature

3/21/16

Date

[illegible] INSPECTION FIELD REPORT LOG

Contractor Name: [illegible]
Site Name: OU-3 Remedial [illegible]
Site Location (City, County, State): [illegible] Calhoun County, Alabama

Specific Area: PCB CELL

Date: 3/13/16

Weather Conditions: Temp. Min 56° Max 74°
Description (Sunny, Cloudy, Overcast, etc.): RAIN
Precipitation: .21 Inches

Work Performed Today (Indicate location and description of work performed and note any safety issues or deviations from the H&S plan)

~~CONTINUED DEVELOPMENT OF BORROW AREA~~

NO WORK PERFORMED

BMP maintenance and inspection	Yes	No
a) Inspection of engineering controls performed weekly and after rainfall?	✓	
b) Attach weekly inspection forms (BMP and stormwater forms)?	✓	
c) Note any correction of defects below?	✓	
d) Weekly stormwater form?	✓	

Comments: BMP'S GOOD CONDITION. NO DISCHARGE OR DAMAGE APPARENT

Dust maintenance and monitoring:

Note if dust suppression is applied

Jason W. Joiner [signature]
Name / Signature

Date

CERCLA INSPECTION FIELD REPORT LOG

Contractor Name: TAYLOR [illegible]
Site Name: OU-3 Remedial [illegible]
Site Location (City, County, State): [illegible] Calhoun County, Alabama
Specific Area: PCB CELL

Date: 3-14-16

Weather Conditions: Temp. Min 79° Max 53°
Description (Rain, Cloudy, Overcast, etc): Cloudy
Precipitation: 0 inches

Work Performed Today (Indicate location and description of work performed and note any safety issues or deviations from the H&S plan):

CONTINUED DEVELOPMENT OF BORROW AREA
HAULED SOIL TO AREA E.

	Yes	No
BMP maintenance and inspection:		
Inspection of engineering controls performed each week and after rainfall?	✓	
Maintain weekly inspection forms (BMP and stormwater forms)?	✓	
Note any correction of defects on weekly stormwater form?	✓	

Comments: BMPs GOOD CONDITION. NO DISCHARGE OR DAMAGE APPARENT

Dust maintenance and monitoring: NO DATA
WATER TRUCK WHEN NEEDED

Note if dust suppression is added

Jason W. Joiner
Name / Signature

3-15-16
Date

DAILY INSPECTION FIELD REPORT LOG

Contractor Name: TAYLOR [illegible]
Site Name: OU-3 Remedial [illegible]
Site Location (City, County, State): [illegible] Calhoun County, Alabama
Specific Area: PCF CELL

Date: 3/15/16

Weather Conditions: Temp. Min 51° Max 88°
Description (sunny, cloudy, overcast etc): CLOUDY
Precipitation: 0 inches

Work Performed Today (Indicate location and description of work performed and note any safety issues or deviations from the H&S plan):

CONTINUED DEVELOPMENT OF BORROW AREA
HAULED SOIL TO AREA E
INSTALLED MORE WADDLES AND SILT FENCE
IN EAST SIDE OF AREA A

	Yes	No
BMP maintenance and inspection:		
Inspection of engineering controls performed each week and after rainfall?	✓	
Maintain weekly inspection forms (E&S and stormwater forms)?	✓	
Timely correction of defects noted?	✓	
Weekly stormwater form?	✓	

Comments: BMPs GOOD CONDITION. NO DISCHARGE OR DAMAGE APPARENT

Dust maintenance and monitoring: 1. METER DOWN
2. .041 mg/m3
3. .012

WATER TRUCK AS NEEDED

Note: Dust suppression is accepted

Jason W. Joiner
Name / Signature

3-16-17
Date

DEMPP INSPECTION FIELD REPORT LOG

Contractor Name: Tauge [illegible]
Site Name: OU-3 Remedial [illegible]
Site Location (City, County, State): [illegible] Calhoun County, Alabama

Specific Area: PCB CELL

Date: 3/16/16

Weather Conditions: Temp. Min 52° Max 80°
Description (Sunny, Cloudy, Overcast etc.): CLEAR
Precipitation: Ø Inches

Work Performed Today (Indicate location and description of work performed and note any safety issues or deviations from the H&S plan)

CONTINUED DEVELOPMENT OF BORROW AREA
INSTALLING LINER IN AREA A

	Yes	No
BMP maintenance and inspection		
a. Inspection of engineering controls performed (eal week and after rainfall)?	✓	
b. Attach weekly inspection forms (BMP and stormwater forms)?	✓	
c. Note any correction of defects below?	✓	
d. Weekly stormwater form?	✓	

Comments: BMPs GOOD CONDITION. NO DISCHARGE OR DAMAGE APPARENT

Dust maintenance and monitoring: 1. OUT OF SERVICE
2. .044 mg/m3
3. .014

WATER TRUCK
AS NEEDED

Note if dust suppression is applied

Jason W. Joiner [signature]
Name / Signature

3-17-16
Date

[illegible] INSPECTION FIELD REPORT LOG

Contractor Name: [illegible]
Site Name: OU-3 Remedial [illegible]
Specific Area: PCB CELL
Site Location (City, County, State): [illegible] Calhoun County, Alabama

Date: 3-17-16

Weather Conditions: Temp. Min 45° Max 78°
Description (Sunny, Cloudy, Overcast, etc.): RAIN
Precipitation: 7 inches

Work Performed Today (Indicate location and description of work performed and note any safety issues or deviations from the H&S plan)

CONTINUED DEVELOPMENT OF BORROW AREA

	Yes	No
BMP maintenance and inspection		
a. Inspection of engineering controls performed (ea. week and after rainfall)?	✓	
b. Attach weekly inspection forms (BMP and stormwater forms)?	✓	
c. Note any correction of defects (e.g.)?	✓	
d. Weekly stormwater form?	✓	

Comments: BMP'S GOOD CONDITION. NO DISCHARGE OR DAMAGE APPARENT

Dust maintenance and monitoring: 1. 2. 3. > NO DATA DUE TO RAIN

Note if dust suppression is applied

Jason W. Joiner [signature]
Name / Signature

3/18/16
Date

[illegible] INSPECTION FIELD REPORT LOG

Contractor Name: [illegible]
Site Name: OU-3 Remedial [illegible]
Site Location (City, County, State): [illegible] Calhoun County, Alabama
Specific Area: PCB CELL

Date: 3/18/16

Weather Conditions: Temp Min 47° Max 77°
Description (Sunny, Cloudy, Overcast): CLOUDY
Precipitation: 0 inches

Work Performed Today (Indicate location and description of work performed and note any safety issues or deviations from the H&S plan)

CONTINUED DEVELOPMENT OF BORROW AREA
CONTINUED TO INSTALL GEO LINER IN AREA A.

BMP maintenance and inspection	Yes	No
a) Inspection of engineering controls performed (eal week and after rainfall)?	✓	
b) Attach weekly inspection forms (BMP and stormwater forms)?	✓	
c) Note any correction of defects delay?	✓	
d) Weekly stormwater form?	✓	

Comments: BMP'S GOOD CONDITION. NO DISCHARGE OR DAMAGE APPARENT

Dust maintenance and monitoring: 1. OUT OF SERVICE
WATER TRUCK 2. .52 > mg/m3
AS NEED 3. .125

Note if dust suppression is applied

Jason W. Joiner [signature]
Name / Signature

3-19-16
Date

[illegible] INSPECTION FIELD REPORT LOG

Contractor Name: [illegible]
Site Name: OU-3 Remedial [illegible]
Specific Area: PCB CELL
Site Location (City, County, State): [illegible] Calhoun County, Alabama

Date: 3-19-16

Weather Conditions: Temp Min 46° Max 65°
Description (Sunny, Cloudy, Overcast etc.): CLOUDY RAIN
Precipitation: T Inches

Work Performed Today (Indicate location and description of work performed and note any safety issues or deviations from the H&S plan)

CONTINUED DEVELOPMENT OF BORROW AREA

BMP maintenance and inspection	Yes	No
a) Inspection of engineering controls performed (eal week and after rainfall)?	✓	
b) Attach weekly inspection forms (BMP and stormwater forms)?	✓	
c) Are any correction of defects below?	✓	
d) Weekly stormwater form?	✓	

Comments: BMPs GOOD CONDITION. NO DISCHARGE OR DAMAGE APPARENT

Dust maintenance and monitoring: > NO DATA DUE TO RAIN

note if dust suppression is applied

Jason W. Joiner [signature]
Name / Signature

3/20/16
Date

STORMWATER INSPECITON AND MAINTENANCE REPORT FORM

Site Name: Anniston PCB Site, OU-3 Remedial Action Cover Systems

Site Location: Anniston, Calhoun County, Alabama

NPDES Permit Number: Not Applicable

Weekly Rainfall Summary:

Day:	Sun	Mon	Tues	Wed	Thurs	Fri	Sat
Date:	3/20	3/21	3/22	3/23	3/24	3/25	3/26
Rainfall:	0	0	0	0	.24	.10	.10

Sampling Information:

- **Sample Type:**
- **Location:**
- **Analysis:**

NA

Inspection Results:

- **Deficiencies or Required Maintenance:**
- **Planned Corrective Action:**

AS NEEDED

- **Corrective Action Schedule:**
- **Other Comments:**

[signature]

Signature

3/27/16

Date

CBMPP INSPECTION FIELD REPORT LOG

Contractor Name: TAYLOR CORP
Site Name: OU-3 Remedial Action
Specific Area: AREA A, E, + BORROW AREA
Site Location (City, County, State): Anniston, Calhoun County, Alabama

Date: 3/21/16

Weather Conditions: Temp: Min 32° Max 59°
Description (Sunny, Cloudy, Overcast, etc) CLEAR
Precipitation: 0 Inches

Work Performed Today (Indicate location and description of work performed and note any safety issues or deviations from the H&S plan):

COVERED AREA A + E WITH GEOLINER
DEVELOPED BORROW SOURCE

BMP maintenance and inspection:	Yes	No
a) Inspection of engineering controls performed (ea. week and after rainfall)?	☑	☐
b) Attach weekly inspection forms (BMP and stormwater forms)?	☑	☐
c) Note any correction of defects below?	☑	☐
d) Weekly stormwater form?	☑	☐

Comments: BMPS IN GOOD WORKING CONDITION.
NO HEAVY DISCHARGE OR DAMAGE

Dust maintenance and monitoring: 1.)
2.) NO DATA mg/m3 SEVICE MONITORS
3.)
WATER TRUCK AS NEEDED FOR DUST CONTROL
(note if dust suppression is applied)

Jason W. Joiner
Name / Signature

3/22/16
Date

CBMPP INSPECTION FIELD REPORT LOG

Contractor Name: TAYLOR CORP
Site Name: OU-3 Remedial Action
Specific Area: AREA A, E, + BORROW AREA
Site Location (City, County, State): Anniston, Calhoun County, Alabama

Date: 3/22/16

Weather Conditions: Temp: Min 32° Max 70°
Description (Sunny, Cloudy, Overcast, etc) CLEAR
Precipitation: 0 Inches

Work Performed Today (Indicate location and description of work performed and note any safety issues or deviations from the H&S plan):

COVERED AREA A + E WITH GEOLINER
DEVELOPED BORROW SOURCE

BMP maintenance and inspection:

	Yes	No
a) Inspection of engineering controls performed (ea. week and after rainfall)?	☑	☐
b) Attach weekly inspection forms (BMP and stormwater forms)?	☑	☐
c) Note any correction of defects below?	☑	☐
d) Weekly stormwater form?	☑	☐

Comments: BMPS IN GOOD WORKING CONDITION.
NO HEAVY DISCHARGE OR DAMAGE

Dust maintenance and monitoring: 1.) .000 mg/m³
2.) .012
3) .007
WATER TRUCK AS NEEDED FOR DUST CONTROL
(note if dust suppression is applied)

Jason W. Joiner
Name / Signature

3/23/16
Date

CBMPP INSPECTION FIELD REPORT LOG

Contractor Name: TAYLOR CORP
Site Name: OU-3 Remedial Action
Specific Area: AREA A, E, + BORROW AREA
Site Location (City, County, State): Anniston, Calhoun County, Alabama

Date: 3/23/16

Weather Conditions: Temp: Min 48° Max 73°
Description (Sunny, Cloudy, Overcast, etc) CLEAR
Precipitation: _____ Inches

Work Performed Today (Indicate location and description of work performed and note any safety issues or deviations from the H&S plan):

COVERED AREA A + E WITH GEOLINER
DEVELOPED BORROW SOURCE

BMP maintenance and inspection:	Yes	No
a) Inspection of engineering controls performed (ea. week and after rainfall)?	☑	☐
b) Attach weekly inspection forms (BMP and stormwater forms)?	☑	☐
c) Note any correction of defects below?	☑	☐
d) Weekly stormwater form?	☑	☐

Comments: BMPS IN GOOD WORKING CONDITION.
NO HEAVY DISCHARGE OR DAMAGE

Dust maintenance and monitoring: 1.) .000 mg/m³
2.) .026
3) .017
WATER TRUCK AS NEEDED FOR DUST CONTROL
(note if dust suppression is applied)

Jason W. Jonker
Name / Signature

3/24/16
Date

CBMPP INSPECTION FIELD REPORT LOG

Contractor Name: TAYLOR CORP
Site Name: OU-3 Remedial Action
Specific Area: AREA A, E, & BORROW AREA
Site Location (City, County, State): Anniston, Calhoun County, Alabama

Date: 3/24/16

Weather Conditions: Temp: Min 59° Max 71°
Description (Sunny, Cloudy, Overcast, etc) RAIN
Precipitation: .26 Inches

Work Performed Today (Indicate location and description of work performed and note any safety issues or deviations from the H&S plan):

COVERED AREA A & E WITH GEOLINER
DEVELOPED BORROW SURFACE

BMP maintenance and inspection:	Yes	No
a) Inspection of engineering controls performed (ea. week and after rainfall)?	☑	☐
b) Attach weekly inspection forms (BMP and stormwater forms)?	☑	☐
c) Note any correction of defects below?	☑	☐
d) Weekly stormwater form?	☑	☐

Comments: BMPS IN GOOD WORKING CONDITION.
NO HEAVY DISCHARGE OR DAMAGE

Dust maintenance and monitoring: 1.) NO DATA mg/m³
2.) RAIN
3.)
WATER TRUCK AS NEEDED FOR DUST CONTROL
(note if dust suppression is applied)

Jason W. Joiner
Name / Signature

3/25/16
Date

CBMPP INSPECTION FIELD REPORT LOG

Contractor Name: TAYLOR CORP
Site Name: OU-3 Remedial Action
Specific Area: AREA A, E, + BORROW AREA
Site Location (City, County, State): Anniston, Calhoun County, Alabama

Date: 3/25/16

Weather Conditions: Temp: Min 50° Max 72°
Description (Sunny, Cloudy, Overcast, etc) RAIN
Precipitation: .10 Inches

Work Performed Today (Indicate location and description of work performed and note any safety issues or deviations from the H&S plan):

COVERED AREA A + E WITH GEOLINER
DEVELOPED BORROW SOURCE

BMP maintenance and inspection:	Yes	No
a) Inspection of engineering controls performed (ea. week and after rainfall)?	☑	☐
b) Attach weekly inspection forms (BMP and stormwater forms)?	☑	☐
c) Note any correction of defects below?	☑	☐
d) Weekly stormwater form?	☑	☐

Comments: BMPS IN GOOD WORKING CONDITION.
NO HEAVY DISCHARGE OR DAMAGE

Dust maintenance and monitoring: 1.) 2.) NO DATA mg/m³ 3.) RAIN
WATER TRUCK AS NEEDED FOR DUST CONTROL
(note if dust suppression is applied)

Jason W. Jones
Name / Signature

3/26/16
Date

CBMPP INSPECTION FIELD REPORT LOG

Contractor Name: TAYLOR CORP
Site Name: OU-3 Remedial Action
Specific Area: AREA A, E, + BORROW AREA
Site Location (City, County, State): Anniston, Calhoun County, Alabama

Date: 3/24/16

Weather Conditions: Temp: Min 48° Max 74°
Description (Sunny, Cloudy, Overcast, etc)
Precipitation: .10 Inches

Work Performed Today (Indicate location and description of work performed and note any safety issues or deviations from the H&S plan):

COVERED AREA A + E WITH GEOLINER
DEVELOPED BORROW SOURCE

BMP maintenance and inspection:	Yes	No
a) Inspection of engineering controls performed (ea. week and after rainfall)?	☑	☐
b) Attach weekly inspection forms (BMP and stormwater forms)?	☑	☐
c) Note any correction of defects below?	☑	☐
d) Weekly stormwater form?	☑	☐

Comments: BMPS IN GOOD WORKING CONDITION.
NO HEAVY DISCHARGE OR DAMAGE

Dust maintenance and monitoring: 1.) 2.) 3.) mg/m³

WATER TRUCK AS NEEDED FOR DUST CONTROL

(note if dust suppression is applied)

JASON W. JANNER
Name / Signature

3/28/16
Date

STORMWATER INSPECITON AND MAINTENANCE REPORT FORM

Site Name: Anniston PCB Site, OU-3 Remedial Action Cover Systems

Site Location: Anniston, Calhoun County, Alabama

NPDES Permit Number: Not Applicable

Weekly Rainfall Summary:

Day:	Sun	Mon	Tues	Wed	Thurs	Fri	Sat
Date:	3/27	3/28	3/29	3/30	3/31		
Rainfall:	.36	Ø	Ø	Ø	.41		

Sampling Information:

- **Sample Type:**
- **Location:**
- **Analysis:**

N/A

Inspection Results:

- **Deficiencies or Required Maintenance:**
- **Planned Corrective Action:**
- **Corrective Action Schedule:**

REPAIR AND MAINT AS NEEDED

- **Other Comments:**

Signature

4/1/16

Date

CBMPP INSPECTION FIELD REPORT LOG

Contractor Name: TAYLOR CORP
Site Name: OU-3 Remedial Action
Specific Area: AREA A, E, & BORROW AREA
Site Location (City, County, State): Anniston, Calhoun County, Alabama

Date: 3/28/16

Weather Conditions: Temp: Min 47° Max 71°
Description (Sunny, Cloudy, Overcast, etc) CLEAR
Precipitation: 0 Inches

Work Performed Today (Indicate location and description of work performed and note any safety issues or deviations from the H&S plan):

COVERED AREA A & E WITH GEOLINER
NO - DEVELOPED BORROW SOURCE
DIRECTIONAL BORING IN AREA A
HAULED SOIL TO AREA E

BMP maintenance and inspection:	Yes	No
a) Inspection of engineering controls performed (ea. week and after rainfall)?	☑	☐
b) Attach weekly inspection forms (BMP and stormwater forms)?	☑	☐
c) Note any correction of defects below?	☑	☐
d) Weekly stormwater form?	☑	☐

Comments: BMPS IN GOOD WORKING CONDITION.
NO HEAVY DISCHARGE OR DAMAGE

Dust maintenance and monitoring: 1.) .023 mg/m³
2.) DNU
3) DNU
WATER TRUCK AS NEEDED FOR DUST CONTROL.
(note if dust suppression is applied)

Jason W. Jarner
Name / Signature

3/29/16
Date

CBMPP INSPECTION FIELD REPORT LOG

Contractor Name: TAYLOR CORP
Site Name: OU-3 Remedial Action
Specific Area: AREA A, E, + BORROW AREA
Site Location (City, County, State): Anniston, Calhoun County, Alabama

Date: 3/29/16

Weather Conditions: Temp: Min 40° Max 73°
Description (Sunny, Cloudy, Overcast, etc) CLEAR
Precipitation: 0 Inches

Work Performed Today (Indicate location and description of work performed and note any safety issues or deviations from the H&S plan):

COVERED AREA A + E WITH GEOLINER
DEVELOPED BORROW SOURCE
HAULED SOIL TO AREA E

BMP maintenance and inspection:	Yes	No
a) Inspection of engineering controls performed (ea. week and after rainfall)?	☑	☐
b) Attach weekly inspection forms (BMP and stormwater forms)?	☑	☐
c) Note any correction of defects below?	☑	☐
d) Weekly stormwater form?	☑	☐

Comments: BMPS IN GOOD WORKING CONDITION.
NO HEAVY DISCHARGE OR DAMAGE

Dust maintenance and monitoring: 1.) .000 mg/m³
2.) .029
3) .014
WATER TRUCK AS NEEDED FOR DUST CONTROL
(note if dust suppression is applied)

Jason W. Joiner
Name / Signature

3/30/16
Date

CBMPP INSPECTION FIELD REPORT LOG

Contractor Name: TAYLOR CORP
Site Name: OU-3 Remedial Action
Specific Area: AREA A, E, + BORROW AREA
Site Location (City, County, State): Anniston, Calhoun County, Alabama

Date: 3/30/16

Weather Conditions: Temp: Min 49° Max 75°
Description (Sunny, Cloudy, Overcast, etc) CLEAR
Precipitation: 0 Inches

Work Performed Today (Indicate location and description of work performed and note any safety issues or deviations from the H&S plan):

COVERED AREA A + E WITH GEOLINER
DEVELOPED BORROW SOURCE
HAULED SOIL TO AREA E

BMP maintenance and inspection:	Yes	No
a) Inspection of engineering controls performed (ea. week and after rainfall)?	☑	☐
b) Attach weekly inspection forms (BMP and stormwater forms)?	☑	☐
c) Note any correction of defects below?	☑	☐
d) Weekly stormwater form?	☑	☐

Comments: BMPS IN GOOD WORKING CONDITION.
NO HEAVY DISCHARGE OR DAMAGE

Dust maintenance and monitoring: 1.) .000
2.) .032 mg/m³
3) .017
WATER TRUCK AS NEEDED FOR DUST CONTROL
(note if dust suppression is applied)

Jason W. Joiner
Name / Signature

3/31/16
Date

CBMPP INSPECTION FIELD REPORT LOG

Contractor Name: TAYLOR CORP
Site Name: OU-3 Remedial Action
Specific Area: AREA A, E, & BORROW AREA
Site Location (City, County, State): Anniston, Calhoun County, Alabama

Date: 3/31/16

Weather Conditions: Temp: Min 64° Max 75°
Description (Sunny, Cloudy, Overcast, etc) RAIN
Precipitation: .41 Inches

Work Performed Today (Indicate location and description of work performed and note any safety issues or deviations from the H&S plan):

NO WORK PERFORMED

COVERED AREA A & E WITH GEOLINER
DEVELOPED BORROW SOURCE

BMP maintenance and inspection:

	Yes	No
a) Inspection of engineering controls performed (ea. week and after rainfall)?	☑	☐
b) Attach weekly inspection forms (BMP and stormwater forms)?	☑	☐
c) Note any correction of defects below?	☑	☐
d) Weekly stormwater form?	☑	☐

Comments: BMPS IN GOOD WORKING CONDITION. NO HEAVY DISCHARGE OR DAMAGE INSTALLED WADDLE ON THE ENTRANCE OF AREA E

Dust maintenance and monitoring: 1.) 2.) NO DATA mg/m³ 3) NO RAIN
WATER TRUCK AS NEEDED FOR DUST CONTROL
(note if dust suppression is applied)

Jason W. Joiner
Name / Signature

4/1/16
Date

Climatological Data for ANNISTON METRO AP, AL - April 2016

Date	Temperature				HDD	CDD	Precipitation	New Snow	Snow Depth
	Maximum	Minimum	Average	Departure					
2016-04-01	72	55	63.5	5.2	1	0	0.64	0.0	0
2016-04-02	66	45	55.5	-3.0	9	0	0.00	0.0	0
2016-04-03	71	42	56.5	-2.2	8	0	0.00	0.0	0
2016-04-04	77	39	58.0	-0.9	7	0	0.00	0.0	0
2016-04-05	70	47	58.5	-0.7	6	0	0.00	0.0	0
2016-04-06	72	45	58.5	-0.9	6	0	0.62	0.0	0
2016-04-07	74	46	60.0	0.4	5	0	T	M	0
2016-04-08	66	42	54.0	-5.8	11	0	0.00	0.0	0
2016-04-09	64	37	50.5	-9.6	14	0	0.00	0.0	0
2016-04-10	71	42	56.5	-3.8	8	0	0.00	0.0	0
2016-04-11	71	48	59.5	-1.1	5	0	1.31	M	0
2016-04-12	69	49	59.0	-1.8	6	0	0.02	0.0	0
2016-04-13	69	47	58.0	-3.0	7	0	0.20	0.0	0
2016-04-14	73	58	65.5	4.2	0	1	0.17	0.0	0
2016-04-15	70	56	63.0	1.5	2	0	0.01	0.0	0
2016-04-16	74	54	64.0	2.2	1	0	0.01	0.0	0
2016-04-17	77	50	63.5	1.5	1	0	0.00	0.0	0
2016-04-18	82	46	64.0	1.7	1	0	0.00	0.0	0
2016-04-19	83	48	65.5	2.9	0	1	0.00	0.0	0
2016-04-20	84	58	71.0	8.2	0	6	0.00	0.0	0
2016-04-21	80	56	68.0	4.9	0	3	T	0.0	0
2016-04-22	78	59	68.5	5.2	0	4	0.03	0.0	0
2016-04-23	79	51	65.0	1.4	0	0	0.00	0.0	0
2016-04-24	82	50	66.0	2.1	0	1	0.00	0.0	0
2016-04-25	83	58	70.5	6.3	0	6	0.00	0.0	0
2016-04-26	84	57	70.5	6.1	0	6	0.00	0.0	0
2016-04-27	82	62	72.0	7.3	0	7	T	0.0	0
2016-04-28	85	61	73.0	8.0	0	8	0.00	0.0	0
2016-04-29	87	58	72.5	7.2	0	8	0.09	0.0	0
2016-04-30	87	63	75.0	9.5	0	10	0.00	0.0	0
Sum	2282	1529	-	-	98	61	3.10	0.0	-
Average	76.1	51.0	63.5	1.8	-	-	-	-	0.0
Normal	74.0	49.5	61.7	-	146	49	4.11	0.2	-

Observations for each day cover the 24 hours ending at the time given below (Local Standard Time).
Max Temperature : midnight
Min Temperature : midnight
Precipitation : midnight
Snowfall : midnight
Snow Depth : 6am

STORMWATER INSPECITON AND MAINTENANCE REPORT FORM

Site Name: Anniston PCB Site, OU-3 Remedial Action Cover Systems

Site Location: Anniston, Calhoun County, Alabama

NPDES Permit Number: Not Applicable

Weekly Rainfall Summary:

Day:	Sun	Mon	Tues	Wed	Thurs	Fri	Sat
Date:						4-1-16	4-2-16
Rainfall:						.64	.00

Sampling Information:

- **Sample Type:**
- **Location:**
- **Analysis:**

NA

Inspection Results:

- **Deficiencies or Required Maintenance:**
- **Planned Corrective Action:**
- **Corrective Action Schedule:**

AS NEEDED

- **Other Comments:**

Signature

4-3-16

Date

CBMPP INSPECTION FIELD REPORT LOG

Contractor Name: TAYLOR CORP
Site Name: OU-3 Remedial Action Specific Area: AREA A, E, + BORROW AREA
Site Location (City, County, State): Anniston, Calhoun County, Alabama

Date: 4-1-16

Weather Conditions: Temp: Min 55 Max 72
Description (Sunny, Cloudy, Overcast, etc) RAIN
Precipitation: .64 Inches

Work Performed Today (Indicate location and description of work performed and note any safety issues or deviations from the H&S plan):

COVERED AREA A + E WITH GEOLINER
DEVELOPED BORROW SOURCE

BMP maintenance and inspection:	Yes	No
a) Inspection of engineering controls performed (ea. week and after rainfall)?	☑	☐
b) Attach weekly inspection forms (BMP and stormwater forms)?	☑	☐
c) Note any correction of defects below?	☑	☐
d) Weekly stormwater form?	☑	☐

Comments: BMPS IN GOOD WORKING CONDITION.
NO HEAVY DISCHARGE OR DAMAGE

Dust maintenance and monitoring: 1.) 2.) 3.) Ø mg/m³
WATER TRUCK AS NEEDED FOR DUST CONTROL
(note if dust suppression is applied)

Jason W. Joiner
Name / Signature

4/2/16
Date

STORMWATER INSPECITON AND MAINTENANCE REPORT FORM

Site Name: Anniston PCB Site, OU-3 Remedial Action Cover Systems

Site Location: Anniston, Calhoun County, Alabama

NPDES Permit Number: Not Applicable

Weekly Rainfall Summary:

Day:	Sun	Mon	Tues	Wed	Thurs	Fri	Sat
Date:	4-3-16	4-4-16	4-5-16	4-6-16	4-7-16	4-8-16	4-9-16
Rainfall:	ø	ø	ø	.62	.10	ø	ø

Sampling Information:

- **Sample Type:**
- **Location:**
- **Analysis:**

NA

Inspection Results:

- **Deficiencies or Required Maintenance:**
- **Planned Corrective Action:**
- **Corrective Action Schedule:**

AS NEEDED

- **Other Comments:**

Signature

4-10-16

Date

CBMPP INSPECTION FIELD REPORT LOG

Contractor Name: TAYLOR CORP
Site Name: OU-3 Remedial Action
Specific Area: AREA A, E, + BORROW AREA
Site Location (City, County, State): Anniston, Calhoun County, Alabama

Date: 4-4-16

Weather Conditions: Temp: Min 39 Max 77
Description (Sunny, Cloudy, Overcast, etc) CLEAR
Precipitation: 0 Inches

Work Performed Today (Indicate location and description of work performed and note any safety issues or deviations from the H&S plan):

COVERED AREA A + E WITH GEOLINER
DEVELOPED BORROW SOURCE

BMP maintenance and inspection:	Yes	No
a) Inspection of engineering controls performed (ea. week and after rainfall)?	☑	☐
b) Attach weekly inspection forms (BMP and stormwater forms)?	☑	☐
c) Note any correction of defects below?	☑	☐
d) Weekly stormwater form?	☑	☐

Comments: BMPS IN GOOD WORKING CONDITION.
NO HEAVY DISCHARGE OR DAMAGE

Dust maintenance and monitoring: 1.) .001 mg/m3
2.) .017
3) .011
WATER TRUCK AS NEEDED FOR DUST CONTROL
(note if dust suppression is applied)

Jason W. Jonner
Name / Signature

4-5-16
Date

CBMPP INSPECTION FIELD REPORT LOG

Contractor Name: TAYLOR CORP
Site Name: OU-3 Remedial Action
Specific Area: AREA A, E, + BORROW AREA
Site Location (City, County, State): Anniston, Calhoun County, Alabama

Date: 4-5-16

Weather Conditions: Temp: Min 47 Max 70
Description (Sunny, Cloudy, Overcast, etc) CLEAR
Precipitation: 0 Inches

Work Performed Today (Indicate location and description of work performed and note any safety issues or deviations from the H&S plan):

COVERED AREA A + E WITH SOIL
DEVELOPED BORROW SOURCE

BMP maintenance and inspection:	Yes	No
a) Inspection of engineering controls performed (ea. week and after rainfall)?	☑	☐
b) Attach weekly inspection forms (BMP and stormwater forms)?	☑	☐
c) Note any correction of defects below?	☑	☐
d) Weekly stormwater form?	☑	☐

Comments: BMPS IN GOOD WORKING CONDITION
NO HEAVY DISCHARGE OR DAMAGE

Dust maintenance and monitoring: 1.) .021 mg/m3
2.) .000
3.) .013
WATER TRUCK AS NEEDED FOR DUST CONTROL
(note if dust suppression is applied)

Jason W. Jarnes
Name / Signature

4-6-16
Date

CBMPP INSPECTION FIELD REPORT LOG

Contractor Name: TAYLOR CORP
Site Name: OU-3 Remedial Action
Specific Area: AREA A, E, + BORROW AREA
Site Location (City, County, State): Anniston, Calhoun County, Alabama

Date: 4-6-16

Weather Conditions: Temp: Min 45 Max 72
Description (Sunny, Cloudy, Overcast, etc) PM
Precipitation: .62 Inches

Work Performed Today (Indicate location and description of work performed and note any safety issues or deviations from the H&S plan):

no work COVERED AREA A + E WITH GEOLINER
DEVELOPED BORROW SOURCE

BMP maintenance and Inspection:	Yes	No
a) Inspection of engineering controls performed (ea. week and after rainfall)?	☑	☐
b) Attach weekly inspection forms (BMP and stormwater forms)?	☑	☐
c) Note any correction of defects below?	☑	☐
d) Weekly stormwater form?	☑	☐

Comments: BMPS IN GOOD WORKING CONDITION.
NO HEAVY DISCHARGE OR DAMAGE

Dust maintenance and monitoring: 1.) 2.) 3.) ∅ mg/m3

WATER TRUCK AS NEEDED FOR DUST CONTROL
(note if dust suppression is applied)

Jason W. Jonnet
Name / Signature

4-7-16
Date

CBMPP INSPECTION FIELD REPORT LOG

Contractor Name: TAYLOR CORP
Site Name: OU-3 Remedial Action
Specific Area: AREA A, E, + BORROW AREA
Site Location (City, County, State): Anniston, Calhoun County, Alabama

Date: 4-7-16

Weather Conditions: Temp: Min 46 Max 74
Description (Sunny, Cloudy, Overcast, etc) RAIN
Precipitation: .10 Inches

Work Performed Today (Indicate location and description of work performed and note any safety issues or deviations from the H&S plan):

no work COVERED AREA A + E WITH GEOLINER
DEVELOPED BORROW SOURCE

	Yes	No
BMP maintenance and inspection:		
a) Inspection of engineering controls performed (ea. week and after rainfall)?	☑	☐
b) Attach weekly inspection forms (BMP and stormwater forms)?	☑	☐
c) Note any correction of defects below?	☑	☐
d) Weekly stormwater form?	☑	☐

Comments: BMPS IN GOOD WORKING CONDITION.
NO HEAVY DISCHARGE OR DAMAGE

Dust maintenance and monitoring: 1.) 2.) 3) mg/m3
WATER TRUCK AS NEEDED FOR DUST CONTROL
(note if dust suppression is applied)

Jason W. Jonnet
Name / Signature

4-8-16
Date

CBMPP INSPECTION FIELD REPORT LOG

Contractor Name: TAYLOR Corp
Site Name: OU-3 Remedial Action
Specific Area: AREA A, E, + Borrow Area
Site Location (City, County, State): Anniston, Calhoun County, Alabama

Date: 4-8-16

Weather Conditions: Temp: Min 42° Max 66°
Description (Sunny, Cloudy, Overcast, etc) CLEAR
Precipitation: 0 inches

Work Performed Today (Indicate location and description of work performed and note any safety issues or deviations from the H&S plan):

COVERED AREA A + E WITH SOIL
DEVELOPED BORROW SOURCE

BMP maintenance and inspection:	Yes	No
a) Inspection of engineering controls performed (ea. week and after rainfall)?	☑	☐
b) Attach weekly inspection forms (BMP and stormwater forms)?	☑	☐
c) Note any correction of defects below?	☑	☐
d) Weekly stormwater form?	☑	☐

Comments: BMPS IN GOOD WORKING CONDITION.
NO HEAVY DISCHARGE OR DAMAGE

Dust maintenance and monitoring: 1.) .001 mg/m3
2.) .017
3.) .000
WATER TRUCK AS NEEDED FOR DUST CONTROL
(note if dust suppression is applied)

Jason W. Jarnes
Name / Signature

4-9-16
Date

CBMPP INSPECTION FIELD REPORT LOG

Contractor Name: TAYLOR CORP
Site Name: OU-3 Remedial Action Specific Area: AREA A, E, + BORROW AREA
Site Location (City, County, State): Anniston, Calhoun County, Alabama

Date: 4-9-16

Weather Conditions: Temp: Min 37° Max 64°
Description (Sunny, Cloudy, Overcast, etc) CLEAR
Precipitation: 0 Inches

Work Performed Today (Indicate location and description of work performed and note any safety issues or deviations from the H&S plan):

COVERED AREA A + E WITH GEOLINER
DEVELOPED BORROW SOURCE SCREENED SOIL

	Yes	No
BMP maintenance and inspection:		
a) Inspection of engineering controls performed (ea. week and after rainfall)?	☑	☐
b) Attach weekly inspection forms (BMP and stormwater forms)?	☑	☐
c) Note any correction of defects below?	☑	☐
d) Weekly stormwater form?	☑	☐

Comments: BMPS IN GOOD WORKING CONDITION.
NO HEAVY DISCHARGE OR DAMAGE

Dust maintenance and monitoring: 1.) 2.) 3.) mg/m³
WATER TRUCK AS NEEDED FOR DUST CONTROL
(note if dust suppression is applied)

Jason W. Jones
Name / Signature

4-10-16
Date

STORMWATER INSPECITON AND MAINTENANCE REPORT FORM

Site Name: Anniston PCB Site, OU-3 Remedial Action Cover Systems

Site Location: Anniston, Calhoun County, Alabama

NPDES Permit Number: Not Applicable

Weekly Rainfall Summary:

Day:	Sun	Mon	Tues	Wed	Thurs	Fri	Sat
Date:	4-10-16	4-11-16	4-12-16	4-13-16	4-14-16	4-15-16	4-16-16
Rainfall:	Ø	1.31	.02	.20	.17	.01	Ø

Sampling Information:

- **Sample Type:**
- **Location:**
- **Analysis:**

NA

Inspection Results:

- **Deficiencies or Required Maintenance:**
- **Planned Corrective Action:**
- **Corrective Action Schedule:**

AS NEEDED

- **Other Comments:**

Signature

4-17-16

Date

CBMPP INSPECTION FIELD REPORT LOG

Contractor Name: TAYLOR CORP
Site Name: OU-3 Remedial Action Specific Area: AREA A, E, + BORROW AREA
Site Location (City, County, State): Anniston, Calhoun County, Alabama

Date: 4-11-16

Weather Conditions: Temp: Min 40° Max 71°
Description (Sunny, Cloudy, Overcast, etc) RAIN / T-STORMS
Precipitation: 1.77 inches

Work Performed Today (Indicate location and description of work performed and note any safety issues or deviations from the H&S plan):

COVERED AREA A + E WITH GEOLINER
DEVELOPED BORROW SOURCE

no work

BMP maintenance and inspection:	Yes	No
a) Inspection of engineering controls performed (ea. week and after rainfall)?	☑	☐
b) Attach weekly inspection forms (BMP and stormwater forms)?	☑	☐
c) Note any correction of defects below?	☑	☐
d) Weekly stormwater form?	☑	☐

Comments: BMPS IN GOOD WORKING CONDITION
NO HEAVY DISCHARGE OR DAMAGE
SOME RUTS DEEP DOWN ROAD IN AREA A.
PUT ROW OF WADDLES ACROSS ROAD

Dust maintenance and monitoring: 1.) 2.) 3.) Ø mg/m3
WATER TRUCK AS NEEDED FOR DUST CONTROL
(note if dust suppression is applied)

Jason W. Jonner
Name / Signature

4-12-16
Date

CBMPP INSPECTION FIELD REPORT LOG

Contractor Name: TAYLOR CORP
Site Name: OU-3 Remedial Action
Specific Area: AREA A, E, + BORROW AREA
Site Location (City, County, State): Anniston, Calhoun County, Alabama

Date: 4-12-16

Weather Conditions: Temp: Min 49° Max 69°
Description (Sunny, Cloudy, Overcast, etc) RAIN
Precipitation: .02 Inches

Work Performed Today (Indicate location and description of work performed and note any safety issues or deviations from the H&S plan):

No impact

COVERED AREA A + E WITH [redacted]
DEVELOPED BORROW SOURCE

BMP maintenance and inspection:	Yes	No
a) Inspection of engineering controls performed (ea. week and after rainfall)?	☑	☐
b) Attach weekly inspection forms (BMP and stormwater forms)?	☑	☐
c) Note any correction of defects below?	☑	☐
d) Weekly stormwater form?	☑	☐

Comments: BMPS IN GOOD WORKING CONDITION.
NO HEAVY DISCHARGE OR DAMAGE
CLEANED ROAD OF SILT BELOW AREA A ROAD

Dust maintenance and monitoring: 1.) 2.) 3) mg/m3
WATER TRUCK AS NEEDED FOR DUST CONTROL
(note if dust suppression is applied)

Jason W. Jonner
Name / Signature

4/13/16
Date

CBMPP INSPECTION FIELD REPORT LOG

Contractor Name: TAYLOR CORP
Site Name: OU-3 Remedial Action
Specific Area: AREA A, E, + BORROW AREA
Site Location (City, County, State): Anniston, Calhoun County, Alabama

Date: 4-13-16

Weather Conditions: Temp: Min 47° Max 69°
Description (Sunny, Cloudy, Overcast, etc) RAIN
Precipitation: .20 Inches

Work Performed Today (Indicate location and description of work performed and note any safety issues or deviations from the H&S plan):

no work COVERED AREA A + E WITH ~~GEOTEXTILE~~ DEVELOPED BORROW SOURCE

BMP maintenance and inspection:	Yes	No
a) Inspection of engineering controls performed (ea. week and after rainfall)?	☑	☐
b) Attach weekly inspection forms (BMP and stormwater forms)?	☑	☐
c) Note any correction of defects below?	☑	☐
d) Weekly stormwater form?	☑	☐

Comments: BMPS IN GOOD WORKING CONDITION. NO HEAVY DISCHARGE OR DAMAGE

Dust maintenance and monitoring: 1.) 2.) 3.) Ø mg/m3

WATER TRUCK AS NEEDED FOR DUST CONTROL

(note if dust suppression is applied)

Jason W. Jonner
Name / Signature

4/14/16
Date

CBMPP INSPECTION FIELD REPORT LOG

Contractor Name: TAYLOR CORP
Site Name: OU-3 Remedial Action
Specific Area: AREA A, E, + BORROW AREA
Site Location (City, County, State): Anniston, Calhoun County, Alabama

Date: 4/14/16

Weather Conditions: Temp: Min 58° Max 73°
Description (Sunny, Cloudy, Overcast, etc.) RAIN
Precipitation: .17 Inches

Work Performed Today (Indicate location and description of work performed and note any safety issues or deviations from the H&S plan):

NO WORK

COVERED AREA A + E WITH SOIL
DEVELOPED BORROW SOURCE
INSTALLED PIPE ON AREA A

BMP maintenance and Inspection:	Yes	No
a) Inspection of engineering controls performed (ea. week and after rainfall)?	☑	☐
b) Attach weekly inspection forms (BMP and stormwater forms)?	☑	☐
c) Note any correction of defects below?	☑	☐
d) Weekly stormwater form?	☑	☐

Comments: BMPS IN GOOD WORKING CONDITION. NO HEAVY DISCHARGE OR DAMAGE. REPLACE A FEW WADDLES IN AREA A.

Dust maintenance and monitoring: 1.) 2.) 3.) Ø mg/m³

WATER TRUCK AS NEEDED FOR DUST CONTROL

(note if dust suppression is applied)

Jason W. Jonner
Name / Signature

4/15/16
Date

CBMPP INSPECTION FIELD REPORT LOG

Contractor Name: TAYLOR CORP
Site Name: OU-3 Remedial Action Specific Area: AREA A, E, + BORROW AREA
Site Location (City, County, State): Anniston, Calhoun County, Alabama

Date: 4/15/16

Weather Conditions: Temp: Min 56° Max 70°
Description (Sunny, Cloudy, Overcast, etc) Rain
Precipitation: .01 Inches

Work Performed Today (Indicate location and description of work performed and note any safety issues or deviations from the H&S plan):

NO WORK COVERED AREA A + E WITH SOIL
DEVELOPED BORROW SOURCE AND
SCREEN DIRT

BMP maintenance and inspection:	Yes	No
a) Inspection of engineering controls performed (ea. week and after rainfall)?	☑	☐
b) Attach weekly inspection forms (BMP and stormwater forms)?	☑	☐
c) Note any correction of defects below?	☑	☐
d) Weekly stormwater form?	☑	☐

Comments: BMPS IN GOOD WORKING CONDITION.
NO HEAVY DISCHARGE OR DAMAGE

Dust maintenance and monitoring: 1.) 2.) 3) mg/m3
WATER TRUCK AS NEEDED FOR DUST CONTROL
(note if dust suppression is applied)

Jason W. Jonker
Name / Signature

4/16/16
Date

STORMWATER INSPECITON AND MAINTENANCE REPORT FORM

Site Name: Anniston PCB Site, OU-3 Remedial Action Cover Systems

Site Location: Anniston, Calhoun County, Alabama

NPDES Permit Number: Not Applicable

Weekly Rainfall Summary:

Day:	Sun	Mon	Tues	Wed	Thurs	Fri	Sat
Date:	4-17-16	4-18-16	4-19-16	4-20-16	4-21-16	4-22-16	4-23-16
Rainfall:	Ø	Ø	Ø	Ø	.10	.03	Ø

Sampling Information:

- **Sample Type:**
- **Location:**
- **Analysis:**

NA

Inspection Results:

- **Deficiencies or Required Maintenance:**
- **Planned Corrective Action:**
- **Corrective Action Schedule:**

AS NEEDED

- **Other Comments:**

Signature

4-24-16

Date

CBMPP INSPECTION FIELD REPORT LOG

Contractor Name: TAYLOR CORP
Site Name: OU-3 Remedial Action Specific Area: AREA A, E, + BORROW AREA
Site Location (City, County, State): Anniston, Calhoun County, Alabama

Date: 4/18/16

Weather Conditions: Temp: Min 46 Max 82
Description (Sunny, Cloudy, Overcast, etc) CLEAR
Precipitation: 0 Inches

Work Performed Today (Indicate location and description of work performed and note any safety issues or deviations from the H&S plan):

COVERED AREA A + E WITH SOIL
DEVELOPED BORROW SOURCE

	Yes	No
BMP maintenance and inspection:		
a) Inspection of engineering controls performed (ea. week and after rainfall)?	☑	☐
b) Attach weekly inspection forms (BMP and stormwater forms)?	☑	☐
c) Note any correction of defects below?	☑	☐
d) Weekly stormwater form?	☑	☐

Comments: BMPS IN GOOD WORKING CONDITION
NO HEAVY DISCHARGE OR DAMAGE

Dust maintenance and monitoring: 1.) .003 mg/m3
2.) .041
3.) .000
WATER TRUCK AS NEEDED FOR DUST CONTROL
(note if dust suppression is applied)

Jason W. Jonker
Name / Signature

4/19/16
Date

CBMPP INSPECTION FIELD REPORT LOG

Contractor Name: TAYLOR CORP
Site Name: OU-3 Remedial Action
Specific Area: AREA A, E, + BORROW AREA
Site Location (City, County, State): Anniston, Calhoun County, Alabama

Date: 4-19-16

Weather Conditions: Temp: Min 48° Max 83°
Description (Sunny, Cloudy, Overcast, etc) CLEAR
Precipitation: 0 Inches

Work Performed Today (Indicate location and description of work performed and note any safety issues or deviations from the H&S plan):

COVERED AREA A + E WITH SOIL
DEVELOPED BORROW SOURCE

BMP maintenance and inspection:	Yes	No
a) Inspection of engineering controls performed (ea. week and after rainfall)?	☑	☐
b) Attach weekly inspection forms (BMP and stormwater forms)?	☑	☐
c) Note any correction of defects below?	☑	☐
d) Weekly stormwater form?	☑	☐

Comments: BMPS IN GOOD WORKING CONDITION.
NO HEAVY DISCHARGE OR DAMAGE

Dust maintenance and monitoring: 1.) .000 mg/m3
2.) .001
3) .023
WATER TRUCK AS NEEDED FOR DUST CONTROL
(note if dust suppression is applied)

Jason W. Jonner
Name / Signature

4/20/16
Date

CBMPP INSPECTION FIELD REPORT LOG

Contractor Name: TAYLOR CORP
Site Name: OU-3 Remedial Action
Specific Area: AREA A, E, + BORROW AREA
Site Location (City, County, State): Anniston, Calhoun County, Alabama

Date: 4/20/16

Weather Conditions: Temp: Min 58° Max 84°
Description (Sunny, Cloudy, Overcast, etc) CLEAR
Precipitation: 0 inches

Work Performed Today (Indicate location and description of work performed and note any safety issues or deviations from the H&S plan):

COVERED AREA A + E WITH SOIL
DEVELOPED BORROW SOURCE

BMP maintenance and inspection:	Yes	No
a) Inspection of engineering controls performed (ea. week and after rainfall)?	☑	☐
b) Attach weekly inspection forms (BMP and stormwater forms)?	☑	☐
c) Note any correction of defects below?	☑	☐
d) Weekly stormwater form?	☑	☐

Comments: BMPS IN GOOD WORKING CONDITION.
NO HEAVY DISCHARGE OR DAMAGE

Dust maintenance and monitoring: 1.) .036 mg/m3
2.) .004
3.) .053
WATER TRUCK AS NEEDED FOR DUST CONTROL
(note if dust suppression is applied)

Jason W. Jonner
Name / Signature

4/21/16
Date

CBMPP INSPECTION FIELD REPORT LOG

Contractor Name: TAYLOR CORP
Site Name: OU-3 Remedial Action Specific Area: AREA A, E, + BORROW AREA
Site Location (City, County, State): Anniston, Calhoun County, Alabama

Date: 4-21-16

Weather Conditions: Temp: Min 56° Max 80°
Description (Sunny, Cloudy, Overcast, etc) RAIN
Precipitation: .10 Inches

Work Performed Today (Indicate location and description of work performed and note any safety issues or deviations from the H&S plan):

COVERED AREA A + E WITH SOIL
DEVELOPED BORROW SOURCE

BMP maintenance and inspection:	Yes	No
a) Inspection of engineering controls performed (ea. week and after rainfall)?	☑	☐
b) Attach weekly inspection forms (BMP and stormwater forms)?	☑	☐
c) Note any correction of defects below?	☑	☐
d) Weekly stormwater form?	☑	☐

Comments: BMPS IN GOOD WORKING CONDITION.
NO HEAVY DISCHARGE OR DAMAGE

Dust maintenance and monitoring: 1.) 2.) 3.) Ø mg/m3 DUE TO RAIN
WATER TRUCK AS NEEDED FOR DUST CONTROL
(note if dust suppression is applied)

Jason W. Joiner
Name / Signature

4/22/16
Date

CBMPP INSPECTION FIELD REPORT LOG

Contractor Name: TAYLOR CORP
Site Name: OU-3 Remedial Action Specific Area: AREA A, E, + BORROW AREA
Site Location (City, County, State): Anniston, Calhoun County, Alabama

Date: 4-22-16

Weather Conditions: Temp: Min 59° Max 78°
Description (Sunny, Cloudy, Overcast, etc.) RAIN
Precipitation: .03 Inches

Work Performed Today (Indicate location and description of work performed and note any safety issues or deviations from the H&S plan):

COVERED AREA A + E WITH SOIL
DEVELOPED BORROW SOURCE

BMP maintenance and inspection:	Yes	No
a) Inspection of engineering controls performed (ea. week and after rainfall)?	☑	☐
b) Attach weekly inspection forms (BMP and stormwater forms)?	☑	☐
c) Note any correction of defects below?	☑	☐
d) Weekly stormwater form?	☑	☐

Comments: BMPS IN GOOD WORKING CONDITION.
NO HEAVY DISCHARGE OR DAMAGE

Dust maintenance and monitoring: 1.) 2.) 3.) Ø mg/m3 DUE TO RAIN
WATER TRUCK AS NEEDED FOR DUST CONTROL
(note if dust suppression is applied)

Jason W. Jonner
Name / Signature

4-23-16
Date

CBMPP INSPECTION FIELD REPORT LOG

Contractor Name: TAYLOR CORP
Site Name: OU-3 Remedial Action Specific Area: AREA A, E, + BORROW AREA
Site Location (City, County, State): Anniston, Calhoun County, Alabama

Date: 4-23-16

Weather Conditions: Temp: Min 51° Max 79°
Description (Sunny, Cloudy, Overcast, etc) CLEAR
Precipitation: _____ Inches

Work Performed Today (Indicate location and description of work performed and note any safety issues or deviations from the H&S plan):

NO WORK

COVERED AREA A + E WITH SOIL
DEVELOPED BORROW SOURCE SCREENED SOIL

BMP maintenance and inspection:	Yes	No
a) Inspection of engineering controls performed (ea. week and after rainfall)?	☑	☐
b) Attach weekly inspection forms (BMP and stormwater forms)?	☑	☐
c) Note any correction of defects below?	☑	☐
d) Weekly stormwater form?	☑	☐

Comments: BMPS IN GOOD WORKING CONDITION
NO HEAVY DISCHARGE OR DAMAGE

Dust maintenance and monitoring: 1.) 2.) 3.) Ø mg/m3

WATER TRUCK AS NEEDED FOR DUST CONTROL

(note if dust suppression is applied)

Jason W. Jonner
Name / Signature

4-24-16
Date

STORMWATER INSPECITON AND MAINTENANCE REPORT FORM

Site Name: Anniston PCB Site, OU-3 Remedial Action Cover Systems

Site Location: Anniston, Calhoun County, Alabama

NPDES Permit Number: Not Applicable

Weekly Rainfall Summary:

Day:	Sun	Mon	Tues	Wed	Thurs	Fri	Sat
Date:	4-24-16	4-25-16	4-26-16	4-27-16	4-28-16	4-29-16	4-30-16
Rainfall:	0	0	0	.01	0	.09	0

Sampling Information:

- **Sample Type:**
- **Location:**
- **Analysis:**

N/A

Inspection Results:

- **Deficiencies or Required Maintenance:**
- **Planned Corrective Action:**
- **Corrective Action Schedule:** AS NEEDED
- **Other Comments:**

Signature _____ **Date** 5-1-16

CBMPP INSPECTION FIELD REPORT LOG

Contractor Name: TAYLOR CORP
Site Name: OU-3 Remedial Action Specific Area: AREA A, E, + BORROW AREA
Site Location (City, County, State): Anniston, Calhoun County, Alabama

Date: 4-25-16

Weather Conditions: Temp: Min 58° Max 83°
Description (Sunny, Cloudy, Overcast, etc) CLOUD
Precipitation: 0 Inches

Work Performed Today (Indicate location and description of work performed and note any safety issues or deviations from the H&S plan):

COVERED AREA A + E WITH SOIL
DEVELOPED BORROW SOURCE

BMP maintenance and inspection:	Yes	No
a) Inspection of engineering controls performed (ea. week and after rainfall)?	☑	☐
b) Attach weekly inspection forms (BMP and stormwater forms)?	☑	☐
c) Note any correction of defects below?	☑	☐
d) Weekly stormwater form?	☑	☐

Comments: BMPS IN GOOD WORKING CONDITION
NO HEAVY DISCHARGE OR DAMAGE

Dust maintenance and monitoring: 1.) .005 mg/m3
2.) .013
3) .000
WATER TRUCK AS NEEDED FOR DUST CONTROL
(note if dust suppression is applied)

Jason W. Jonner
Name / Signature

4-26-16
Date

CBMPP INSPECTION FIELD REPORT LOG

Contractor Name: TAYLOR CORP
Site Name: OU-3 Remedial Action
Specific Area: AREA A, E, + BORROW AREA
Site Location (City, County, State): Anniston, Calhoun County, Alabama

Date: 4-26-16

Weather Conditions: Temp: Min 57° Max 84°
Description (Sunny, Cloudy, Overcast, etc) CLOUDY
Precipitation: 0 Inches

Work Performed Today (Indicate location and description of work performed and note any safety issues or deviations from the H&S plan):

COVERED AREA A + E WITH SOIL
DEVELOPED BORROW SOURCE

BMP maintenance and inspection:	Yes	No
a) Inspection of engineering controls performed (ea. week and after rainfall)?	☑	☐
b) Attach weekly inspection forms (BMP and stormwater forms)?	☑	☐
c) Note any correction of defects below?	☑	☐
d) Weekly stormwater form?	☑	☐

Comments: BMPS IN GOOD WORKING CONDITION.
NO HEAVY DISCHARGE OR DAMAGE

Dust maintenance and monitoring: 1.) .043
2.) .021
3) .003
mg/m3
WATER TRUCK AS NEEDED FOR DUST CONTROL
(note if dust suppression is applied)

Jason W. Jarner
Name / Signature

4-27-16
Date

CBMPP INSPECTION FIELD REPORT LOG

Contractor Name: TAYLOR CORP
Site Name: OU-3 Remedial Action
Specific Area: AREA A, E, + BORROW AREA
Site Location (City, County, State): Anniston, Calhoun County, Alabama

Date: 4-27-16

Weather Conditions: Temp: Min 62° Max 82°
Description (Sunny, Cloudy, Overcast, etc) T-Storm
Precipitation: .10 Inches

Work Performed Today (Indicate location and description of work performed and note any safety issues or deviations from the H&S plan):

DID NOT WORK

COVERED AREA A + E WITH SOIL
DEVELOPED BORROW SOURCE

BMP maintenance and inspection:	Yes	No
a) Inspection of engineering controls performed (ea. week and after rainfall)?	☑	☐
b) Attach weekly inspection forms (BMP and stormwater forms)?	☑	☐
c) Note any correction of defects below?	☑	☐
d) Weekly stormwater form?	☑	☐

Comments: BMPS IN GOOD WORKING CONDITION.
NO HEAVY DISCHARGE OR DAMAGE

Dust maintenance and monitoring: 1.) 2.) 3.) Ø mg/m3
WATER TRUCK A-3
NEEDED FOR DUST CONTROL
(note if dust suppression is applied)

Jason W. Janner
Name / Signature

4-28-16
Date

CBMPP INSPECTION FIELD REPORT LOG

Contractor Name: TAYLOR CORP
Site Name: OU-3 Remedial Action
Specific Area: AREA A, E, + BORROW AREA
Site Location (City, County, State): Anniston, Calhoun County, Alabama

Date: 4-28-16

Weather Conditions: Temp: Min 61° Max 85°
Description (Sunny, Cloudy, Overcast, etc) CLEAR
Precipitation: 0 Inches

Work Performed Today (Indicate location and description of work performed and note any safety issues or deviations from the H&S plan):

COVERED AREA A + E WITH SOIL
DEVELOPED BORROW SOURCE

BMP maintenance and inspection:	Yes	No
a) Inspection of engineering controls performed (ea. week and after rainfall)?	☑	☐
b) Attach weekly inspection forms (BMP and stormwater forms)?	☑	☐
c) Note any correction of defects below?	☑	☐
d) Weekly stormwater form?	☑	☐

Comments: BMPS IN GOOD WORKING CONDITION.
NO HEAVY DISCHARGE OR DAMAGE

Dust maintenance and monitoring: 1.) .001 mg/m3
2.) .031
3) .000
WATER TRUCK AS NEEDED FOR DUST CONTROL
(note if dust suppression is applied)

Jason W. Jonner
Name / Signature

4-29-16
Date

CBMPP INSPECTION FIELD REPORT LOG

Contractor Name: TAYLOR CORP
Site Name: OU-3 Remedial Action
Specific Area: AREA A, E, + BORROW AREA
Site Location (City, County, State): Anniston, Calhoun County, Alabama

Date: 4-29-16

Weather Conditions: Temp: Min 58° Max 87°
Description (Sunny, Cloudy, Overcast, etc.) T'STORMS
Precipitation: .03 Inches

Work Performed Today (Indicate location and description of work performed and note any safety issues or deviations from the H&S plan):

DID NOT WORK

COVERED AREA A + E WITH SOIL
DEVELOPED BORROW SOURCE

BMP maintenance and inspection:	Yes	No
a) Inspection of engineering controls performed (ea. week and after rainfall)?	☑	☐
b) Attach weekly inspection forms (BMP and stormwater forms)?	☑	☐
c) Note any correction of defects below?	☑	☐
d) Weekly stormwater form?	☑	☐

Comments: BMPS IN GOOD WORKING CONDITION
NO HEAVY DISCHARGE OR DAMAGE
SHORED UP BMPS AS NEEDED

Dust maintenance and monitoring: 1.) 2.) 3.) Ø mg/m3
WATER TRUCK AS NEEDED FOR DUST CONTROL
(note if dust suppression is applied)

Jason W. Jonner
Name / Signature

4-30-16
Date

Climatological Data for ANNISTON METRO AP, AL - May 2016

Date	Temperature				HDD	CDD	Precipitation	New Snow	Snow Depth
	Maximum	Minimum	Average	Departure					
2016-05-01	80	63	71.5	5.7	0	7	2.58	0.0	0
2016-05-02	82	62	72.0	5.9	0	7	0.65	0.0	0
2016-05-03	75	61	68.0	1.6	0	3	0.02	0.0	0
2016-05-04	73	51	62.0	-4.6	3	0	0.08	0.0	0
2016-05-05	69	52	60.5	-6.4	4	0	0.00	0.0	0
2016-05-06	72	44	58.0	-9.2	7	0	0.00	0.0	0
2016-05-07	81	45	63.0	-4.5	2	0	0.00	0.0	0
2016-05-08	86	53	69.5	1.7	0	5	0.00	0.0	0
2016-05-09	74	59	66.5	-1.5	0	2	T	0.0	0
2016-05-10	84	63	73.5	5.2	0	9	0.00	0.0	0
2016-05-11	85	62	73.5	4.9	0	9	0.00	0.0	0
2016-05-12	83	66	74.5	5.6	0	10	0.72	0.0	0
2016-05-13	78	55	66.5	-2.6	0	2	0.00	0.0	0
2016-05-14	82	50	66.0	-3.4	0	1	0.00	0.0	0
2016-05-15	72	50	61.0	-8.7	4	0	0.00	0.0	0
2016-05-16	76	51	63.5	-6.5	1	0	0.00	0.0	0
2016-05-17	82	61	71.5	1.3	0	7	0.23	0.0	0
2016-05-18	81	66	73.5	3.0	0	9	0.03	0.0	0
2016-05-19	84	62	73.0	2.2	0	8	T	0.0	0
2016-05-20	76	67	71.5	0.5	0	7	0.18	0.0	0
2016-05-21	81	64	72.5	1.2	0	8	T	0.0	0
2016-05-22	80	57	68.5	-3.0	0	4	0.00	0.0	0
2016-05-23	84	52	68.0	-3.8	0	3	0.00	0.0	0
2016-05-24	86	54	70.0	-2.1	0	5	0.00	0.0	0
2016-05-25	88	59	73.5	1.2	0	9	0.00	0.0	0
2016-05-26	89	62	75.5	2.9	0	11	0.00	0.0	0
2016-05-27	88	64	76.0	3.2	0	11	0.00	0.0	0
2016-05-28	87	68	77.5	4.4	0	13	0.00	0.0	0
2016-05-29	90	65	77.5	4.2	0	13	0.00	0.0	0
2016-05-30	92	64	78.0	4.4	0	13	0.00	0.0	0
2016-05-31	94	65	79.5	5.7	0	15	0.00	0.0	0
Sum	2534	1817	-	-	21	191	4.49	0.0	-
Average	81.7	58.6	70.2	0.3	-	-	-	-	0.0
Normal	81.0	58.8	69.9	-	26	178	4.26	0.0	-

Observations for each day cover the 24 hours ending at the time given below (Local Standard Time).
Max Temperature : midnight
Min Temperature : midnight
Precipitation : midnight
Snowfall : midnight
Snow Depth : 6am

STORMWATER INSPECITON AND MAINTENANCE REPORT FORM

Site Name: Anniston PCB Site, OU-3 Remedial Action Cover Systems

Site Location: Anniston, Calhoun County, Alabama

NPDES Permit Number: Not Applicable

Weekly Rainfall Summary:

Day:	Sun	Mon	Tues	Wed	Thurs	Fri	Sat
Date:	5-1-16	5-2-16	5-3-16	5-4-16	5-5-16	5-6-16	5-7-16
Rainfall:	2.58"	.65"	.02"	.08"	Ø	Ø	Ø

Sampling Information:

- **Sample Type:**
- **Location:**
- **Analysis:**

N A

Inspection Results:

- **Deficiencies or Required Maintenance:**
- **Planned Corrective Action:**

AS NEEDED

- **Corrective Action Schedule:**
- **Other Comments:**

Signature

5-9-16

Date

CBMPP INSPECTION FIELD REPORT LOG

Contractor Name: TC
Site Name: OU-3 Remedial Action Specific Area: AREA A, E + BORROW AREA
Site Location (City, County, State): Anniston, Calhoun County, Alabama

Date: 5-2-16

Weather Conditions: Temp: Min 62° Max 82°
Description (Sunny, Cloudy, Overcast, etc) T STORM
Precipitation: .65 Inches

Work Performed Today (Indicate location and description of work performed and note any safety issues or deviations from the H&S plan):

NO WORK PERFORMED

	Yes	No
BMP maintenance and inspection:		
a) Inspection of engineering controls performed (ea. week and after rainfall)?	☑	☐
b) Attach weekly inspection forms (BMP and stormwater forms)?	☑	☐
c) Note any correction of defects below?	☑	☐
d) Weekly stormwater form?	☐	☐

Comments: BMPS IN GOOD CONDITION. NO EXCESSIVE DISCHARGE OR DAMAGE.

Dust maintenance and monitoring: Ø

Ø

(note if dust suppression is applied)

Name / Signature

5-2-16
Date

CBMPP INSPECTION FIELD REPORT LOG

Contractor Name: TC
Site Name: OU-3 Remedial Action Specific Area: AREA A, E BORROW AREA
Site Location (City, County, State): Anniston, Calhoun County, Alabama

Date: 5-3-16 **Weather Conditions:** Temp: Min 61° Max 75°
Description (Sunny, Cloudy, Overcast, etc) RAIN
Precipitation: .02 Inches

Work Performed Today (Indicate location and description of work performed and note any safety issues or deviations from the H&S plan):

AM INSTALLED SOD IN AREA E
HAUL SOIL TO AREA A
SCREENED SOIL IN BORROW AREA

	Yes	No
BMP maintenance and inspection:		
a) Inspection of engineering controls performed (ea. week and after rainfall)?	☑	☐
b) Attach weekly inspection forms (BMP and stormwater forms)?	☑	☐
c) Note any correction of defects below?	☑	☐
d) Weekly stormwater form?	☐	☐

Comments: BMPs IN GOOD CONDITION. NEW WADDLES ADD TO ROAD NORTH OF AREA A
SILT POND PARTIALLY CLEANED OUT.

Dust maintenance and monitoring:
Ø DUE TO RAIN

(note if dust suppression is applied)

Name / Signature

5-3-16
Date

CBMPP INSPECTION FIELD REPORT LOG

Contractor Name: TC
Site Name: OU-3 Remedial Action Specific Area: AREA A, E, BORROW AREA
Site Location (City, County, State): Anniston, Calhoun County, Alabama

Date: 5-4-16 **Weather Conditions:** Temp: Min 51° Max 73°
Description (Sunny, Cloudy, Overcast, etc) RAIN
Precipitation: 0.08 Inches

Work Performed Today (Indicate location and description of work performed and note any safety issues or deviations from the H&S plan):

MOVED DIRT IN AREA A

	Yes	No
BMP maintenance and inspection:		
a) Inspection of engineering controls performed (ea. week and after rainfall)?	☑	☐
b) Attach weekly inspection forms (BMP and stormwater forms)?	☑	☐
c) Note any correction of defects below?	☑	☐
d) Weekly stormwater form?	☑	☐

Comments: NO DAMAGE OR DISCHARGE

Dust maintenance and monitoring: RAIN

(note if dust suppression is applied)

Name / Signature

5-5-16
Date

CBMPP INSPECTION FIELD REPORT LOG

Contractor Name: TAYLOR CORP
Site Name: OU-3 Remedial Action
Specific Area: AREA A, E, + BORROW AR
Site Location (City, County, State): Anniston, Calhoun County, Alabama

Date: 5-5-16

Weather Conditions: Temp: Min 44 Max 72°
Description (Sunny, Cloudy, Overcast, etc) CLOUDY
Precipitation: Ø Inches

Work Performed Today (Indicate location and description of work performed and note any safety issues or deviations from the H&S plan):

COVERED AREA A+E WITH TOP SOIL.
DEVELOPED BORROW SOURCE

BMP maintenance and inspection:	Yes	No
a) Inspection of engineering controls performed (ea. week and after rainfall)?	☑	☐
b) Attach weekly inspection forms (BMP and stormwater forms)?	☑	☐
c) Note any correction of defects below?	☑	☐
d) Weekly stormwater form?	☑	☐

Comments: BMPS IN GOOD WORKING CONDITION.
NO HEAVY DISCHARGE OR DAMAGE

Dust maintenance and monitoring: 1.) .006 mg/m3
2.) .043
3) .019
WATER TRUCK A-3
NEEDED FOR DUST CONTROL
(note if dust suppression is applied)

Jason W. Joiner
Name / Signature

5-6-16
Date

CBMPP INSPECTION FIELD REPORT LOG

Contractor Name: TAYLOR CORP
Site Name: OU-3 Remedial Action
Specific Area: AREA A, E, + BORROW AR
Site Location (City, County, State): Anniston, Calhoun County, Alabama

Date: 5-6-16

Weather Conditions: Temp: Min 44° Max 72°
Description (Sunny, Cloudy, Overcast, etc) CLOUDY
Precipitation: 0 Inches

Work Performed Today (Indicate location and description of work performed and note any safety issues or deviations from the H&S plan):

COVERED AREA A + E. WITH TOP SOIL.
DEVELOPED BORROW SOURCE

BMP maintenance and inspection:	Yes	No
a) Inspection of engineering controls performed (ea. week and after rainfall)?	☑	☐
b) Attach weekly inspection forms (BMP and stormwater forms)?	☑	☐
c) Note any correction of defects below?	☑	☐
d) Weekly stormwater form?	☑	☐

Comments: BMPS IN GOOD WORKING CONDITION.
NO HEAVY DISCHARGE OR DAMAGE

Dust maintenance and monitoring: 1.) .000 2.) .055 3.) .025 mg/m3
WATER TRUCK AS NEEDED FOR DUST CONTROL
(note if dust suppression is applied)

Jason W. Joiner
Name / Signature

5-9-16
Date

STORMWATER INSPECITON AND MAINTENANCE REPORT FORM

Site Name: Anniston PCB Site, OU-3 Remedial Action Cover Systems

Site Location: Anniston, Calhoun County, Alabama

NPDES Permit Number: Not Applicable

Weekly Rainfall Summary:

Day:	Sun	Mon	Tues	Wed	Thurs	Fri	Sat
Date:	5-8-16	5-9-16	5-10-16	5-11-16	5-12-16	5-13-16	5-14-16
Rainfall:	0	.03	0	0	.72"	0	0

Sampling Information:

- **Sample Type:** NA
- **Location:**
- **Analysis:**

Inspection Results:

- **Deficiencies or Required Maintenance:**
- **Planned Corrective Action:** AS NEEDED
- **Corrective Action Schedule:**
- **Other Comments:** 5-13-16
  ADDED Appx 70' OF ADDITIONAL SILT FENCE TO THE EAST SIDE OF AREA A

Signature _____ Date 5-16-16

CBMPP INSPECTION FIELD REPORT LOG

Contractor Name: TAYLOR CORP
Site Name: OU-3 Remedial Action Specific Area: AREA A, E, + BORROW AR
Site Location (City, County, State): Anniston, Calhoun County, Alabama

Date: 5-9-16 **Weather Conditions:** Temp: Min 57° Max 74°
Description (Sunny, Cloudy, Overcast, etc) RAIN
Precipitation: [redacted] .03 Inches

Work Performed Today (Indicate location and description of work performed and note any safety issues or deviations from the H&S plan):

COVERED AREA A WITH TOP SOIL.
DEVELOPED BORROW SOURCE
DID NOT

BMP maintenance and inspection:	Yes	No
a) Inspection of engineering controls performed (ea. week and after rainfall)?	☑	☐
b) Attach weekly inspection forms (BMP and stormwater forms)?	☑	☐
c) Note any correction of defects below?	☑	☐
d) Weekly stormwater form?	☑	☐

Comments: BMPS IN GOOD WORKING CONDITION.
NO HEAVY DISCHARGE OR DAMAGE

Dust maintenance and monitoring: 1.) 2.) 3.) Ø mg/m³ DUE TO RAIN
WATER TRUCK AS NEEDED FOR DUST CONTROL
(note if dust suppression is applied)

Jason W. Joiner
Name / Signature

5-10-16
Date

CBMPP INSPECTION FIELD REPORT LOG

Contractor Name: TAYLOR CORP
Site Name: OU-3 Remedial Action Specific Area: AREA A, E, + Borrow Are
Site Location (City, County, State): Anniston, Calhoun County, Alabama

Date: 5-10-16

Weather Conditions: Temp: Min 63° Max 84°
Description (Sunny, Cloudy, Overcast, etc) CLOUDY
Precipitation: 0 Inches

Work Performed Today (Indicate location and description of work performed and note any safety issues or deviations from the H&S plan):

COVERED AREA A + E. WITH TOP SOIL.
DEVELOPED BORROW SOURCE

	Yes	No
BMP maintenance and inspection:		
a) Inspection of engineering controls performed (ea. week and after rainfall)?	☑	☐
b) Attach weekly inspection forms (BMP and stormwater forms)?	☑	☐
c) Note any correction of defects below?	☑	☐
d) Weekly stormwater form?	☑	☐

Comments: BMPS IN GOOD WORKING CONDITION.
NO HEAVY DISCHARGE OR DAMAGE

Dust maintenance and monitoring: 1.) .000 mg/m3
2.) .031
3) .030
WATER TRUCK AS NEEDED FOR DUST CONTROL
(note if dust suppression is applied)

Jason W. Jarner
Name / Signature

5-11-16
Date

CBMPP INSPECTION FIELD REPORT LOG

Contractor Name: TAYLOR CORP
Site Name: OU-3 Remedial Action Specific Area: AREA A, E, + BORROW ARE
Site Location (City, County, State): Anniston, Calhoun County, Alabama

Date: 5-11-16 **Weather Conditions:** Temp: Min 62° Max 85°
Description (Sunny, Cloudy, Overcast, etc) CLEAR
Precipitation: 0 Inches

Work Performed Today (Indicate location and description of work performed and note any safety issues or deviations from the H&S plan):

COVERED AREA A & E. WITH TOP SOIL & SOD
DEVELOPED BORROW SOURCE

BMP maintenance and inspection:	Yes	No
a) Inspection of engineering controls performed (ea. week and after rainfall)?	☑	☐
b) Attach weekly inspection forms (BMP and stormwater forms)?	☑	☐
c) Note any correction of defects below?	☑	☐
d) Weekly stormwater form?	☑	☐

Comments: BMPS IN GOOD WORKING CONDITION.
NO HEAVY DISCHARGE OR DAMAGE

Dust maintenance and monitoring: 1.) .000
2.) .045 mg/m3
3) DID NOT USE
WATER TRUCK AS NEEDED FOR DUST CONTROL
(note if dust suppression is applied)

Jason W. Jonner
Name / Signature

5-12-16
Date

CBMPP INSPECTION FIELD REPORT LOG

Contractor Name: Taylor Corp
Site Name: OU-3 Remedial Action Specific Area: Did not work
Site Location (City, County, State): Anniston, Calhoun County, Alabama

Date: 5-12-16 **Weather Conditions:** Temp: Min 66° Max 83°
Description (Sunny, Cloudy, Overcast, etc) T-Storm
Precipitation: .72 Inches

Work Performed Today (Indicate location and description of work performed and note any safety issues or deviations from the H&S plan):

No work performed secured Bmps

BMP maintenance and inspection:	Yes	No
a) Inspection of engineering controls performed (ea. week and after rainfall)?	☑	☐
b) Attach weekly inspection forms (BMP and stormwater forms)?	☑	☐
c) Note any correction of defects below?	☑	☐
d) Weekly stormwater form?	☑	☐

Comments: Bmp's in Good Condition
no excesive discharge. Added more waddles
in area a round Road

Dust maintenance and monitoring: NA Rain

(note if dust suppression is applied)

Jason L Stover
Name / Signature

5-13-16
Date

CBMPP INSPECTION FIELD REPORT LOG

Contractor Name: TAYLOR CORP
Site Name: OU-3 Remedial Action
Specific Area: AREA A, E, + BORROW AR
Site Location (City, County, State): Anniston, Calhoun County, Alabama

Date: 5-13-16

Weather Conditions: Temp: Min 55° Max 78°
Description (Sunny, Cloudy, Overcast, etc) CLEAR
Precipitation: 0 Inches

Work Performed Today (Indicate location and description of work performed and note any safety issues or deviations from the H&S plan):

COVERED AREA A WITH TOP SOIL.
DID NOT - DEVELOPED BORROW SOURCE

BMP maintenance and inspection:	Yes	No
a) Inspection of engineering controls performed (ea. week and after rainfall)?	☑	☐
b) Attach weekly inspection forms (BMP and stormwater forms)?	☑	☐
c) Note any correction of defects below?	☑	☐
d) Weekly stormwater form?	☑	☐

Comments: BMPS IN GOOD WORKING CONDITION. NO HEAVY DISCHARGE OR DAMAGE

Dust maintenance and monitoring: 1.) .007 mg/m3
2.) .085
3.) DID NOT USE
WATER TRUCK A3 NEEDED FOR DUST CONTROL
(note if dust suppression is applied)

Jason W. Jonner
Name / Signature

5-16-16
Date

STORMWATER INSPECITON AND MAINTENANCE REPORT FORM

Site Name: Anniston PCB Site, OU-3 Remedial Action Cover Systems

Site Location: Anniston, Calhoun County, Alabama

NPDES Permit Number: Not Applicable

Weekly Rainfall Summary:

Day:	Sun	Mon	Tues	Wed	Thurs	Fri	Sat
Date:	5-15-16	5-16-16	5-17-16	5-18-16	5-19-16	5-20-16	5-21-16
Rainfall:	ø	ø	.23	.03	.10	.18	ø

Sampling Information:

- **Sample Type:** NA
- **Location:**
- **Analysis:**

Inspection Results:

- **Deficiencies or Required Maintenance:**
- **Planned Corrective Action:** AS NEEDED
- **Corrective Action Schedule:**
- **Other Comments:**

Jason Joiner
Signature

5-22-16
Date

CBMPP INSPECTION FIELD REPORT LOG

Contractor Name: TAYLOR CORP
Site Name: OU-3 Remedial Action
Specific Area: AREA A, E, + BORROW AR
Site Location (City, County, State): Anniston, Calhoun County, Alabama

Date: 5-16-16

Weather Conditions: Temp: Min 51° Max 76°
Description (Sunny, Cloudy, Overcast, etc) CLOUDY
Precipitation: 0 Inches

Work Performed Today (Indicate location and description of work performed and note any safety issues or deviations from the H&S plan):

COVERED AREA A WITH TOP SOIL.
DEVELOPED BORROW SOURCE

BMP maintenance and inspection:	Yes	No
a) Inspection of engineering controls performed (ea. week and after rainfall)?	☑	☐
b) Attach weekly inspection forms (BMP and stormwater forms)?	☑	☐
c) Note any correction of defects below?	☑	☐
d) Weekly stormwater form?	☑	☐

Comments: BMPS IN GOOD WORKING CONDITION.
NO HEAVY DISCHARGE OR DAMAGE

Dust maintenance and monitoring: 1.) 2.) 3) mg/m3
WATER TRUCK AS NEEDED FOR DUST CONTROL
(note if dust suppression is applied)

Jason W. Jonner
Name / Signature

5-17-16
Date

CBMPP INSPECTION FIELD REPORT LOG

Contractor Name: TAYLOR CORP
Site Name: OU-3 Remedial Action
Specific Area: AREA A, E, + Borrow Area
Site Location (City, County, State): Anniston, Calhoun County, Alabama

Date: 5-17-16

Weather Conditions: Temp: Min 61° Max 82°
Description (Sunny, Cloudy, Overcast, etc) RAIN
Precipitation: .23 Inches

Work Performed Today (Indicate location and description of work performed and note any safety issues or deviations from the H&S plan):

- COVERED AREA A WITH TOP SOIL.
- ~~DEVELOPED BORROW SOURCE~~
MADE ANY NEED REPAIRS ON AREA A
INSTALLED ARMOUR SHIELD

BMP maintenance and inspection:	Yes	No
a) Inspection of engineering controls performed (ea. week and after rainfall)?	☑	☐
b) Attach weekly inspection forms (BMP and stormwater forms)?	☑	☐
c) Note any correction of defects below?	☑	☐
d) Weekly stormwater form?	☑	☐

Comments: BMPS IN GOOD WORKING CONDITION.
NO HEAVY DISCHARGE OR DAMAGE

Dust maintenance and monitoring: 1.) 2.) NA mg/m³ RAIN 3)
WATER TRUCK AS NEEDED FOR DUST CONTROL.
(note if dust suppression is applied)

Jason W. Jonner
Name / Signature

5-18-16
Date

CBMPP INSPECTION FIELD REPORT LOG

Contractor Name: TAYLOR CORP
Site Name: OU-3 Remedial Action
Specific Area: AREA A, E, + BORROW ARE
Site Location (City, County, State): Anniston, Calhoun County, Alabama

Date: 5-18-16

Weather Conditions: Temp: Min ____ Max ____
Description (Sunny, Cloudy, Overcast, etc) T- STORMS
Precipitation: .03 Inches

Work Performed Today (Indicate location and description of work performed and note any safety issues or deviations from the H&S plan):

COVERED AREA A ... WITH TOP SOIL.
~~DEVELOPED BORROW SOURCE~~
INSTALLED ARMOR SHIELD
INSTALLED VAULT N. AREA A

BMP maintenance and inspection:	Yes	No
a) Inspection of engineering controls performed (ea. week and after rainfall)?	☑	☐
b) Attach weekly inspection forms (BMP and stormwater forms)?	☑	☐
c) Note any correction of defects below?	☑	☐
d) Weekly stormwater form?	☑	☐

Comments: BMPS IN GOOD WORKING CONDITION.
NO HEAVY DISCHARGE OR DAMAGE

Dust maintenance and monitoring: 1.) 2.) NA mg/m3 RAIN 3)
WATER TRUCK AS NEEDED FOR DUST CONTROL
(note if dust suppression is applied)

Jason W. Joiner
Name / Signature

5-19-16
Date

CBMPP INSPECTION FIELD REPORT LOG

Contractor Name: TAYLOR CORP
Site Name: OU-3 Remedial Action
Specific Area: AREA A, E, + BORROW AR
Site Location (City, County, State): Anniston, Calhoun County, Alabama

Date: 5-19-16

Weather Conditions: Temp: Min ____ Max ____
Description (Sunny, Cloudy, Overcast, etc) CLOUDY RAIN
Precipitation: .01 Inches

Work Performed Today (Indicate location and description of work performed and note any safety issues or deviations from the H&S plan):

COVERED AREA A WITH TOP SOIL.
DEVELOPED BORROW SOURCE
INSTALLED RAD FOR VAULT
INSTALLED ARMOUR SHIELD

BMP maintenance and inspection:	Yes	No
a) Inspection of engineering controls performed (ea. week and after rainfall)?	☑	☐
b) Attach weekly inspection forms (BMP and stormwater forms)?	☑	☐
c) Note any correction of defects below?	☑	☐
d) Weekly stormwater form?	☑	☐

Comments: BMPS IN GOOD WORKING CONDITION.
NO HEAVY DISCHARGE OR DAMAGE
INSTALLED GRASS SEED AND HAY IN AREA

Dust maintenance and monitoring: 1.) 2.) 3) mg/m³
WATER TRUCK AS NEEDED FOR DUST CONTROL
(note if dust suppression is applied)

Jason W. Joiner
Name / Signature

5-20-16
Date

CBMPP INSPECTION FIELD REPORT LOG

Contractor Name: TAYLOR CORP
Site Name: OU-3 Remedial Action
Specific Area: AREA A, E, + BORROW AR
Site Location (City, County, State): Anniston, Calhoun County, Alabama

Date: 5-20-16

Weather Conditions: Temp: Min 67° Max 76°
Description (Sunny, Cloudy, Overcast, etc) RAIN
Precipitation: .18 Inches

Work Performed Today (Indicate location and description of work performed and note any safety issues or deviations from the H&S plan):

no work
no-work COVERED AREA A WITH TOP SOIL.
DEVELOPED BORROW SOURCE
INSTALLED PAD FOR PUMP HOUSE IN AREA A

BMP maintenance and inspection:	Yes	No
a) Inspection of engineering controls performed (ea. week and after rainfall)?	☑	☐
b) Attach weekly inspection forms (BMP and stormwater forms)?	☑	☐
c) Note any correction of defects below?	☑	☐
d) Weekly stormwater form?	☑	☐

Comments: BMPS IN GOOD WORKING CONDITION.
NO HEAVY DISCHARGE OR DAMAGE

Dust maintenance and monitoring: 1.) 2.) 3.) NA mg/m³ RAIN
WATER TRUCK AS NEEDED FOR DUST CONTROL
(note if dust suppression is applied)

Jason W. Jonner
Name / Signature

5-23-16
Date

STORMWATER INSPECITON AND MAINTENANCE REPORT FORM

Site Name: Anniston PCB Site, OU-3 Remedial Action Cover Systems

Site Location: Anniston, Calhoun County, Alabama

NPDES Permit Number: Not Applicable

Weekly Rainfall Summary:

Day:	Sun	Mon	Tues	Wed	Thurs	Fri	Sat
Date:	5-22-16	5-23-16	5-24-16	5-25-16	5-26-16	5-27-16	5-28-16
Rainfall:	0	0	0	0	0	0	0

Sampling Information:

- **Sample Type:**
- **Location:**
- **Analysis:** NA

Inspection Results:

- **Deficiencies or Required Maintenance:**
- **Planned Corrective Action:**
- **Corrective Action Schedule:** AS NEEDED
- **Other Comments:**

Jason L. Jones — 5-29-16

Signature **Date**

CBMPP INSPECTION FIELD REPORT LOG

Contractor Name: TL
Site Name: OU-3 Remedial Action Specific Area: AREA A
Site Location (City, County, State): Anniston, Calhoun County, Alabama

Date: 5-23-16 **Weather Conditions:** Temp: Min 52° Max 84°
Description (Sunny, Cloudy, Overcast, etc) CLEAR
Precipitation: 0 Inches

Work Performed Today (Indicate location and description of work performed and note any safety issues or deviations from the H&S plan):

SET PUMP HOUSE ON AREA A

	Yes	No
BMP maintenance and inspection:		
a) Inspection of engineering controls performed (ea. week and after rainfall)?	☑	☐
b) Attach weekly inspection forms (BMP and stormwater forms)?	☑	☐
c) Note any correction of defects below?	☑	☐
d) Weekly stormwater form?	☐	☐

Comments: NO DAMAGE OR DISCHARGE

Dust maintenance and monitoring: 0

(note if dust suppression is applied)

Name / Signature

5-24-16
Date

CBMPP INSPECTION FIELD REPORT LOG

Contractor Name: TC
Site Name: OU-3 Remedial Action Specific Area: AREA A
Site Location (City, County, State): Anniston, Calhoun County, Alabama

Date: 5-24-16 **Weather Conditions:** Temp: Min 54 Max 86°
Description (Sunny, Cloudy, Overcast, etc) CLEAR
Precipitation: 0 Inches

Work Performed Today (Indicate location and description of work performed and note any safety issues or deviations from the H&S plan):

PIPE WORK IN SE CORNER AREA A
CLEANED 7TH STREET AND HOUSE
KEEPING ALL AREAS

	Yes	No
BMP maintenance and inspection:		
a) Inspection of engineering controls performed (ea. week and after rainfall)?	☑	☐
b) Attach weekly inspection forms (BMP and stormwater forms)?	☑	☐
c) Note any correction of defects below?	☑	☐
d) Weekly stormwater form?	☑	☐

Comments: NO DAMAGE OR DISCHARGE

Dust maintenance and monitoring: NA

(note if dust suppression is applied)

JASON JOINER
Name / Signature

5-25-16
Date

CBMPP INSPECTION FIELD REPORT LOG

Contractor Name: TC
Site Name: OU-3 Remedial Action Specific Area: AREA A
Site Location (City, County, State): Anniston, Calhoun County, Alabama

Date: 5-25-16 **Weather Conditions:** Temp: Min 59° Max 88°
Description (Sunny, Cloudy, Overcast, etc) CLEAR
Precipitation: 0 Inches

Work Performed Today (Indicate location and description of work performed and note any safety issues or deviations from the H&S plan):

CONTINUED TO BACKFILL ~~NW~~ SE CORNER OF AREA A, RESEED WHERE NEEDED

	Yes	No
BMP maintenance and inspection:		
a) Inspection of engineering controls performed (ea. week and after rainfall)?	☑	☐
b) Attach weekly inspection forms (BMP and stormwater forms)?	☑	☐
c) Note any correction of defects below?	☑	☐
d) Weekly stormwater form?	☑	☐

Comments: NO DAMAGE OR DISCHARGE

Dust maintenance and monitoring: NA

(note if dust suppression is applied)

Jason Jones
Name / Signature

5-26-16
Date

CBMPP INSPECTION FIELD REPORT LOG

Contractor Name: TC
Site Name: OU-3 Remedial Action Specific Area: AREA A, AREA E
Site Location (City, County, State): Anniston, Calhoun County, Alabama

Date: 5-26-16 **Weather Conditions:** Temp: Min 62° Max 89°
Description (Sunny, Cloudy, Overcast, etc) CLEAR
Precipitation: 0 Inches

Work Performed Today (Indicate location and description of work performed and note any safety issues or deviations from the H&S plan):

PLACED FORMS AROUND WELL PADS IN AREA A, E CLEANED AROUND AREA A. HAULED OF EXCESS MATERIAL. STARTED PUNCH LIST FOR END OF PROJECT ~~IS~~ INSTALL Appx 70 LFT OF ARMOR SHIELD

	Yes	No
BMP maintenance and inspection:		
a) Inspection of engineering controls performed (ea. week and after rainfall)?	☑	☐
b) Attach weekly inspection forms (BMP and stormwater forms)?	☑	☐
c) Note any correction of defects below?	☑	☐
d) Weekly stormwater form?	☐	☐

Comments: NO DAMAGE OR DISCHARGE

Dust maintenance and monitoring: NA

(note if dust suppression is applied)

Jason Jones
Name / Signature

5-27-16
Date

CBMPP INSPECTION FIELD REPORT LOG

Contractor Name: TL
Site Name: OU-3 Remedial Action Specific Area: AREA A + E
Site Location (City, County, State): Anniston, Calhoun County, Alabama

Date: 5-27-16 **Weather Conditions:** Temp: Min 64° Max 88°
Description (Sunny, Cloudy, Overcast, etc) CLEAR
Precipitation: 0 Inches

Work Performed Today (Indicate location and description of work performed and note any safety issues or deviations from the H&S plan):

POUR CONCRETE INLET PADS, FINISHED HAULING OFF EXCESS MATERIAL, RESECURED BMPS IN AREA A & 7TH STREET. CONTINUED GENERAL HOUSE KEEPING OF ALL AREAS. FINISHED WITH NEEDED RESEADING AND MULCHING

	Yes	No
BMP maintenance and inspection:		
a) Inspection of engineering controls performed (ea. week and after rainfall)?	☑	☐
b) Attach weekly inspection forms (BMP and stormwater forms)?	☑	☐
c) Note any correction of defects below?	☑	☐
d) Weekly stormwater form?	☑	☐

Comments: NO DAMAGE OR DISCHARGE REPORTED NO DAMAGE THAT MAY HAVE BEEN NEEDED

Dust maintenance and monitoring: NA

(note if dust suppression is applied)

Jason W Johnson
Name / Signature

5-30-16
Date

STORMWATER INSPECITON AND MAINTENANCE REPORT FORM

Site Name: Anniston PCB Site, OU-3 Remedial Action Cover Systems

Site Location: Anniston, Calhoun County, Alabama

NPDES Permit Number: Not Applicable

Weekly Rainfall Summary:

Day:	Sun	Mon	Tues	Wed	Thurs	Fri	Sat
Date:	5-29-16	5-30-16	5-31-16				
Rainfall:	0	0	0				

Sampling Information:

- **Sample Type:** NA
- **Location:**
- **Analysis:**

Inspection Results:

- **Deficiencies or Required Maintenance:**
- **Planned Corrective Action:** AS NEEDED
- **Corrective Action Schedule:**
- **Other Comments:**

6-1-16

Signature **Date**

CBMPP INSPECTION FIELD REPORT LOG

Contractor Name: TL
Site Name: OU-3 Remedial Action Specific Area: NONE
Site Location (City, County, State): Anniston, Calhoun County, Alabama

Date: 5-30-16 **Weather Conditions:** Temp: Min 64° Max 92°
Description (Sunny, Cloudy, Overcast, etc) CLEAR
Precipitation: 0 Inches

Work Performed Today (Indicate location and description of work performed and note any safety issues or deviations from the H&S plan):

NO WORK PERFORMED
INSPECT ALL BMPS NOTATE BMP DEFICIENCIES

	Yes	No
BMP maintenance and inspection:		
a) Inspection of engineering controls performed (ea. week and after rainfall)?	☑	☐
b) Attach weekly inspection forms (BMP and stormwater forms)?	☑	☐
c) Note any correction of defects below?	☑	☐
d) Weekly stormwater form?	☐	☐

Comments: BMPS IN GOOD CONDITION
NO DAMAGE NOTICED

Dust maintenance and monitoring: NA

(note if dust suppression is applied)

Jason W. Lowe
Name / Signature

5-31-16
Date

CBMPP INSPECTION FIELD REPORT LOG

Contractor Name: TC
Site Name: OU-3 Remedial Action Specific Area: [redacted] AREA A, E, BP, PCE TOP SOIL STOCK PILE
Site Location (City, County, State): Anniston, Calhoun County, Alabama

Date: 5-31-16 **Weather Conditions:** Temp: Min 65° Max 94°
Description (Sunny, Cloudy, Overcast, etc) CLEAR
Precipitation: 0 Inches

Work Performed Today (Indicate location and description of work performed and note any safety issues or deviations from the H&S plan):

NO WORK PERFORMED

	Yes	No
BMP maintenance and inspection:		
a) Inspection of engineering controls performed (ea. week and after rainfall)?	☑	☐
b) Attach weekly inspection forms (BMP and stormwater forms)?	☑	☐
c) Note any correction of defects below?	☐	☐
d) Weekly stormwater form?	☑	☐

Comments: NO NOTICEABLE DAMAGE

Dust maintenance and monitoring:

NA

(note if dust suppression is applied)

Name / Signature

6-1-16
Date

Climatological Data for ANNISTON METRO AP, AL - June 2016

Date	Temperature				HDD	CDD	Precipitation	New Snow	Snow Depth
	Maximum	Minimum	Average	Departure					
2016-06-01	91	66	78.5	4.4	0	14	0.18	0.0	0
2016-06-02	89	70	79.5	5.2	0	15	0.20	0.0	0
2016-06-03	93	68	80.5	6.0	0	16	0.00	0.0	0
2016-06-04	87	69	78.0	3.2	0	13	0.09	0.0	0
2016-06-05	85	71	78.0	3.0	0	13	0.03	0.0	0
2016-06-06	86	69	77.5	2.3	0	13	0.09	0.0	0
2016-06-07	92	64	78.0	2.6	0	13	0.00	0.0	0
2016-06-08	87	58	72.5	-3.1	0	8	0.00	0.0	0
2016-06-09	91	57	74.0	-1.9	0	9	0.00	0.0	0
2016-06-10	94	62	78.0	1.9	0	13	0.00	0.0	0
2016-06-11	95	66	80.5	4.2	0	16	0.00	0.0	0
2016-06-12	95	69	82.0	5.5	0	17	0.00	0.0	0
2016-06-13	96	70	83.0	6.3	0	18	0.00	0.0	0
2016-06-14	92	71	81.5	4.6	0	17	0.24	0.0	0
2016-06-15	89	71	80.0	3.0	0	15	0.41	0.0	0
2016-06-16	93	68	80.5	3.3	0	16	0.08	0.0	0
2016-06-17	95	68	81.5	4.1	0	17	0.24	0.0	0
2016-06-18	81	67	74.0	-3.6	0	9	0.00	0.0	0
2016-06-19	85	66	75.5	-2.2	0	11	0.00	0.0	0
2016-06-20	88	62	75.0	-2.9	0	10	0.00	0.0	0
2016-06-21	91	63	77.0	-1.1	0	12	0.00	0.0	0
2016-06-22	92	68	80.0	1.8	0	15	0.00	0.0	0
2016-06-23	91	66	78.5	0.1	0	14	0.00	0.0	0
2016-06-24	97	69	83.0	4.5	0	18	0.00	0.0	0
2016-06-25	100	72	86.0	7.4	0	21	0.00	0.0	0
2016-06-26	92	72	82.0	3.3	0	17	0.00	0.0	0
2016-06-27	96	69	82.5	3.6	0	18	T	0.0	0
2016-06-28	90	71	80.5	1.5	0	16	0.00	0.0	0
2016-06-29	96	68	82.0	2.9	0	17	0.00	0.0	0
2016-06-30	94	65	79.5	0.3	0	15	0.00	0.0	0
Sum	2743	2015	-	-	0	436	1.56	0.0	-
Average	91.4	67.2	79.3	2.3	-	-	-	-	0.0
Normal	87.3	66.6	77.0	-	1	359	4.08	0.0	-

Observations for each day cover the 24 hours ending at the time given below (Local Standard Time).
Max Temperature : midnight
Min Temperature : midnight
Precipitation : midnight
Snowfall : midnight
Snow Depth : 6am

STORMWATER INSPECITON AND MAINTENANCE REPORT FORM

Site Name: Anniston PCB Site, OU-3 Remedial Action Cover Systems

Site Location: Anniston, Calhoun County, Alabama

NPDES Permit Number: Not Applicable

Weekly Rainfall Summary:

Day:	Sun	Mon	Tues	Wed	Thurs	Fri	Sat
Date:				6-1-16	6-2-16	6-3-16	6-4-16
Rainfall:				.18"	.20"	0	.09"

Sampling Information:

- **Sample Type:**
- **Location:**
- **Analysis:**

NA

Inspection Results:

- **Deficiencies or Required Maintenance:**
- **Planned Corrective Action:**
- **Corrective Action Schedule:**

AS NEEDED

- **Other Comments:**

[signature] 6-5-16

Signature **Date**

CBMPP INSPECTION FIELD REPORT LOG

Contractor Name: TC
Site Name: OU-3 Remedial Action Specific Area: AREA A, E BORROW + PCB CELL CVD
Site Location (City, County, State): Anniston, Calhoun County, Alabama

Date: 6-1-16 **Weather Conditions:** Temp: Min 66° Max 91°
Description (Sunny, Cloudy, Overcast, etc) T-STORMS
Precipitation: .18 Inches

Work Performed Today (Indicate location and description of work performed and note any safety issues or deviations from the H&S plan):

NO WORK PERFORMED

BMP maintenance and inspection:	Yes	No
a) Inspection of engineering controls performed (ea. week and after rainfall)?	☑	☐
b) Attach weekly inspection forms (BMP and stormwater forms)?	☑	☐
c) Note any correction of defects below?	☑	☐
d) Weekly stormwater form?	☐	☐

Comments: BMP'S IN GOOD CONDITION
NO DAMAGE OR DISCHARGE.

Dust maintenance and monitoring: > MT
NA

(note if dust suppression is applied)

JASON LANCE
Name / Signature

6/2/16
Date

CBMPP INSPECTION FIELD REPORT LOG

Contractor Name: TC
Site Name: OU-3 Remedial Action Specific Area: AREA, A, E BORROW + PCB CELL C+D
Site Location (City, County, State): Anniston, Calhoun County, Alabama

Date: 6-2-16 **Weather Conditions:** Temp: Min ____ Max ____
Description (Sunny, Cloudy, Overcast, etc) T-STORMS
Precipitation: ____ Inches

Work Performed Today (Indicate location and description of work performed and note any safety issues or deviations from the H&S plan):

NO WORK PERFORMED

BMP maintenance and inspection:	Yes	No
a) Inspection of engineering controls performed (ea. week and after rainfall)?	☑	☐
b) Attach weekly inspection forms (BMP and stormwater forms)?	☑	☐
c) Note any correction of defects below?	☑	☐
d) Weekly stormwater form?	☐	☐

Comments: BMP'S IN GOOD CONDITION. NO DAMAGE OR EXCESSIVE DISCHARGE

Dust maintenance and monitoring: > NA

NA

(note if dust suppression is applied)

Jason Lindsey
Name / Signature

6-3-16
Date

CBMPP INSPECTION FIELD REPORT LOG

Contractor Name: TC
Site Name: OU-3 Remedial Action Specific Area: AREA A, C+D, E, BORROW + PCB
Site Location (City, County, State): Anniston, Calhoun County, Alabama

Date: 6-3-16 **Weather Conditions:** Temp: Min 68° Max 93°
Description (Sunny, Cloudy, Overcast, etc) Sunny
Precipitation: 0 Inches

Work Performed Today (Indicate location and description of work performed and note any safety issues or deviations from the H&S plan):

No work performed

	Yes	No
BMP maintenance and inspection:		
a) Inspection of engineering controls performed (ea. week and after rainfall)?	☑	☐
b) Attach weekly inspection forms (BMP and stormwater forms)?	☑	☐
c) Note any correction of defects below?	☑	☐
d) Weekly stormwater form?	☑	☐

Comments: No Damage or Discharge
BMPs in Good condition

Dust maintenance and monitoring: NA
NA

(note if dust suppression is applied)

Jason W Tanner
Name / Signature

6-4-16
Date

STORMWATER INSPECITON AND MAINTENANCE REPORT FORM

Site Name: Anniston PCB Site, OU-3 Remedial Action Cover Systems

Site Location: Anniston, Calhoun County, Alabama

NPDES Permit Number: Not Applicable

Weekly Rainfall Summary:

Day:	Sun	Mon	Tues	Wed	Thurs	Fri	Sat
Date:	6-5-16	6-6-16	6-7-16	6-8-16	6-9-16	6-10-16	6-11-16
Rainfall:	.03"	.09"	Ø	Ø	Ø	Ø	Ø

Sampling Information:

- **Sample Type:**
- **Location:**
- **Analysis:**

NA

Inspection Results:

- **Deficiencies or Required Maintenance:**
- **Planned Corrective Action:**
- **Corrective Action Schedule:**

As needed

- **Other Comments:**

[signature] 6-12-16

Signature **Date**

CBMPP INSPECTION FIELD REPORT LOG

Contractor Name: Taylor Corp
Site Name: OU-3 Remedial Action
Specific Area: Area A, E, Borrow + PCB Cell C+D
Site Location (City, County, State): Anniston, Calhoun County, Alabama

Date: ~~6-7-16~~ 6-6-16

Weather Conditions: Temp: Min 69° Max 86°
Description (Sunny, Cloudy, Overcast, etc) rain
Precipitation: .09" Inches

Work Performed Today (Indicate location and description of work performed and note any safety issues or deviations from the H&S plan):

No work performed

BMP maintenance and inspection:	Yes	No
a) Inspection of engineering controls performed (ea. week and after rainfall)?	☑	☐
b) Attach weekly inspection forms (BMP and stormwater forms)?	☑	☐
c) Note any correction of defects below?	☑	☐
d) Weekly stormwater form?	☑	☐

Comments: BMPs in good condition
No damage or discharge

Dust maintenance and monitoring: NA
NA

(note if dust suppression is applied)

Jason W Joiner / Jason W Joiner
Name / Signature

6/7/16
Date

CBMPP INSPECTION FIELD REPORT LOG

Contractor Name: Taylor Corp
Site Name: OU-3 Remedial Action Specific Area: Area A, E, Borrow & DCB Cell C+D
Site Location (City, County, State): Anniston, Calhoun County, Alabama

Date: 6-7-16 **Weather Conditions:** Temp: Min 64° Max 92°
Description (Sunny, Cloudy, Overcast, etc) Cloudy
Precipitation: 0 Inches

Work Performed Today (Indicate location and description of work performed and note any safety issues or deviations from the H&S plan):

Restore Borrow Area

BMP maintenance and inspection:	Yes	No
a) Inspection of engineering controls performed (ea. week and after rainfall)?	☑	☐
b) Attach weekly inspection forms (BMP and stormwater forms)?	☑	☐
c) Note any correction of defects below?	☑	☐
d) Weekly stormwater form?	☑	☐

Comments: BMPs in ~~for~~ good condition
No damage or discharge.

Dust maintenance and monitoring: 1) mg/m³

water truck as needed for dust control
(note if dust suppression is applied)

Jason W Joiner / Jason W Joiner
Name / Signature

6-8-16
Date

CBMPP INSPECTION FIELD REPORT LOG

Contractor Name: Taylor Corp
Site Name: OU-3 Remedial Action
Specific Area: Area A, C, D, E, Borrow + PCB Cell
Site Location (City, County, State): Anniston, Calhoun County, Alabama

Date: 10-8-16

Weather Conditions: Temp: Min 58° Max 87°
Description (Sunny, Cloudy, Overcast, etc) Sunny
Precipitation: 0 Inches

Work Performed Today (Indicate location and description of work performed and note any safety issues or deviations from the H&S plan):

Restore Borrow Area

	Yes	No
BMP maintenance and inspection:		
a) Inspection of engineering controls performed (ea. week and after rainfall)?	☑	☐
b) Attach weekly inspection forms (BMP and stormwater forms)?	☑	☐
c) Note any correction of defects below?	☑	☐
d) Weekly stormwater form?	☑	☐

Comments: BMPs in good condition
No damage or discharge

Dust maintenance and monitoring: 1) mg/m³

Water truck as needed for dust control

(note if dust suppression is applied)

Jason W. Joiner / Jason W. Joiner
Name / Signature

10-9-16
Date

CBMPP INSPECTION FIELD REPORT LOG

Contractor Name: Taylor Corp
Site Name: OU-3 Remedial Action Specific Area: Area A, C, D, E, Borrow + PCB Cell
Site Location (City, County, State): Anniston, Calhoun County, Alabama

Date: 6-9-16 **Weather Conditions:** Temp: Min 57° Max 91°
Description (Sunny, Cloudy, Overcast, etc) SUNNY
Precipitation: Ø Inches

Work Performed Today (Indicate location and description of work performed and note any safety issues or deviations from the H&S plan):

Restore Borrow Area

BMP maintenance and inspection:	Yes	No
a) Inspection of engineering controls performed (ea. week and after rainfall)?	☑	☐
b) Attach weekly inspection forms (BMP and stormwater forms)?	☑	☐
c) Note any correction of defects below?	☑	☐
d) Weekly stormwater form?	☑	☐

Comments: No damage, or discharge
BMPS in good condition

Dust maintenance and monitoring: 1) mg/m3

Water truck as needed for dust control

(note if dust suppression is applied)

Jason W. Joiner / Jason W Joiner
Name / Signature

6-10-16
Date

CBMPP INSPECTION FIELD REPORT LOG

Contractor Name: Taylor Corp
Site Name: OU-3 Remedial Action Specific Area: Area A, C, D, E, Borrow & PCB Cell
Site Location (City, County, State): Anniston, Calhoun County, Alabama

Date: 6-10-16 **Weather Conditions:** Temp: Min 62° Max 94°
Description (Sunny, Cloudy, Overcast, etc) Sunny
Precipitation: 0 Inches

Work Performed Today (Indicate location and description of work performed and note any safety issues or deviations from the H&S plan):

Restore Borrow Area

BMP maintenance and inspection:	Yes	No
a) Inspection of engineering controls performed (ea. week and after rainfall)?	☑	☐
b) Attach weekly inspection forms (BMP and stormwater forms)?	☑	☐
c) Note any correction of defects below?	☑	☐
d) Weekly stormwater form?	☑	☐

Comments: No damage or discharge
BMPs in good condition

Dust maintenance and monitoring: 1) mg/m³

water truck as needed for dust control

(note if dust suppression is applied)

Jason W Shiner / Jason W Shiner
Name / Signature

6-11-16
Date

STORMWATER INSPECITON AND MAINTENANCE REPORT FORM

Site Name: Anniston PCB Site, OU-3 Remedial Action Cover Systems

Site Location: Anniston, Calhoun County, Alabama

NPDES Permit Number: Not Applicable

Weekly Rainfall Summary:

Day:	Sun	Mon	Tues	Wed	Thurs	Fri	Sat
Date:	6-12-16	6-13-16	6-14-16	6-15-16	6-16-16	6-17-16	6-18-16
Rainfall:	ø	ø	.24"	.41"	.08"	.24"	ø

Sampling Information:

- **Sample Type:**
- **Location:**
- **Analysis:**

NA

Inspection Results:

- **Deficiencies or Required Maintenance:**
- **Planned Corrective Action:**
- **Corrective Action Schedule:**

AS NEEDED

- **Other Comments:**

6-19-16

Signature **Date**

CBMPP INSPECTION FIELD REPORT LOG

Contractor Name: TC
Site Name: OU-3 Remedial Action Specific Area: AREA A, C, D, E Borrow & PCB
Site Location (City, County, State): Anniston, Calhoun County, Alabama

Date: 6-13-16 **Weather Conditions:** Temp: Min 70° Max 96°
Description (Sunny, Cloudy, Overcast, etc) T-STORMS
Precipitation: TRACE Inches

Work Performed Today (Indicate location and description of work performed and note any safety issues or deviations from the H&S plan):

RESTORE BORROW PIT

	Yes	No
BMP maintenance and inspection:		
a) Inspection of engineering controls performed (ea. week and after rainfall)?	☑	☐
b) Attach weekly inspection forms (BMP and stormwater forms)?	☑	☐
c) Note any correction of defects below?	☐	☐
d) Weekly stormwater form?	☐	☐

Comments: BMPs IN GOOD CONDITIONS. NO DAMAGE OR [redacted] DISCHARGE

Dust maintenance and monitoring: 1) mg/m³

WATER TRUCK AS NEEDED FOR DUST SUPPRESSIONS

(note if dust suppression is applied)

[signature]
Name / Signature

6/14-16
Date

CBMPP INSPECTION FIELD REPORT LOG

Contractor Name: TC
Site Name: OU-3 Remedial Action
Specific Area: AREA A, E, C, D, BORROW PCB
Site Location (City, County, State): Anniston, Calhoun County, Alabama

Date: 6-14-16

Weather Conditions: Temp: Min 71° Max 92°
Description (Sunny, Cloudy, Overcast, etc) * T-STORMS
Precipitation: .24 Inches

Work Performed Today (Indicate location and description of work performed and note any safety issues or deviations from the H&S plan):

RESTORE BORROW AT

BMP maintenance and inspection:	Yes	No
a) Inspection of engineering controls performed (ea. week and after rainfall)?	☑	☐
b) Attach weekly inspection forms (BMP and stormwater forms)?	☑	☐
c) Note any correction of defects below?	☑	☐
d) Weekly stormwater form?	☐	☐

Comments: BMPS IN AREA A REPAIRED AT ENTRY GATE N. OF AREA A.

Dust maintenance and monitoring: 1) ~~mg/m3~~ NO DUST MONITOR DUE TO ~~WEATHER~~

~~Dt~~ NA

(note if dust suppression is applied)

[signature] / [signature]
Name / Signature

6-15-16
Date

CBMPP INSPECTION FIELD REPORT LOG

Contractor Name: TL

Site Name: OU-3 Remedial Action Specific Area: AREA A, C+D E + BORROW DCB

Site Location (City, County, State): Anniston, Calhoun County, Alabama

Date: 6-[illegible]-16

Weather Conditions: Temp: Min 71° Max 89°

Description (Sunny, Cloudy, Overcast, etc) 1/2 T-STORMS

Precipitation: .24 Inches

Work Performed Today (Indicate location and description of work performed and note any safety issues or deviations from the H&S plan):

RESTORE BORROW AREA

BMP maintenance and inspection:	Yes	No
a) Inspection of engineering controls performed (ea. week and after rainfall)?	☑	☐
b) Attach weekly inspection forms (BMP and stormwater forms)?	☑	☐
c) Note any correction of defects below?	☑	☐
d) Weekly stormwater form?	☑	☐

Comments: NO DAMAGE OF HEAVY DISCHARGE
BMP'S IN GOOD CONDITION

Dust maintenance and monitoring: NO MONITOR DUE TO WEATHER

(note if dust suppression is applied)

JASON L JONES

Name / Signature

6-16-16

Date

CBMPP INSPECTION FIELD REPORT LOG

Contractor Name: TL
Site Name: OU-3 Remedial Action Specific Area: AREA A, C+D, E, Borrow Pit
Site Location (City, County, State): Anniston, Calhoun County, Alabama

Date: 6-16-16 **Weather Conditions:** Temp: Min 68 Max 93°
Description (Sunny, Cloudy, Overcast, etc) T-STORM
Precipitation: .08 Inches

Work Performed Today (Indicate location and description of work performed and note any safety issues or deviations from the H&S plan):

RESTORED BORROW PIT

BMP maintenance and inspection:	Yes	No
a) Inspection of engineering controls performed (ea. week and after rainfall)?	☑	☐
b) Attach weekly inspection forms (BMP and stormwater forms)?	☑	☐
c) Note any correction of defects below?	☑	☐
d) Weekly stormwater form?	☑	☐

Comments: NO DAMAGE OR DISCHARGE
BMP'S IN N. AREA A REPLACE 20' OF WADDLES AT CREEK TO GRASS GROWTH NOTICEABLE

Dust maintenance and monitoring: NA

(note if dust suppression is applied)

JASON WILLIAMS
Name / Signature

6-17-16
Date

STORMWATER INSPECITON AND MAINTENANCE REPORT FORM

Site Name: Anniston PCB Site, OU-3 Remedial Action Cover Systems

Site Location: Anniston, Calhoun County, Alabama

NPDES Permit Number: Not Applicable

Weekly Rainfall Summary:

Day:	Sun	Mon	Tues	Wed	Thurs	Fri	Sat
Date:	6-19-16	6-20-16	6-21-16	6-22-16	6-23-16	6-24-16	6-25-16
Rainfall:	Ø	Ø	Ø	Ø	Ø	Ø	Ø

Sampling Information:

- **Sample Type:**
- **Location:**
- **Analysis:**

NA

Inspection Results:

- **Deficiencies or Required Maintenance:**
- **Planned Corrective Action:**
- **Corrective Action Schedule:**

As needed

- **Other Comments:**

[signature] 6/26/16

Signature **Date**

CBMPP INSPECTION FIELD REPORT LOG

Contractor Name: Taylor Corp
Site Name: OU-3 Remedial Action Specific Area: Area A, C, D, E, Borrow + PCB Cell
Site Location (City, County, State): Anniston, Calhoun County, Alabama

Date: 6-20-16 **Weather Conditions:** Temp: Min 62° Max 88°
Description (Sunny, Cloudy, Overcast, etc) Partly Cloudy
Precipitation: 0 Inches

Work Performed Today (Indicate location and description of work performed and note any safety issues or deviations from the H&S plan):

Restore borrow Area

BMP maintenance and inspection:	Yes	No
a) Inspection of engineering controls performed (ea. week and after rainfall)?	☑	☐
b) Attach weekly inspection forms (BMP and stormwater forms)?	☑	☐
c) Note any correction of defects below?	☑	☐
d) Weekly stormwater form?	☑	☐

Comments: BMPs in good condition
No damage or discharge

Dust maintenance and monitoring: 1) mg/m3

water truck as needed for dust control

(note if dust suppression is applied)

Jason W Joiner / Jason W Joiner
Name / Signature

6-21-16
Date

CBMPP INSPECTION FIELD REPORT LOG

Contractor Name: Taylor Corp
Site Name: OU-3 Remedial Action
Specific Area: Area A, C, D, E, Borrow + PCB Cell
Site Location (City, County, State): Anniston, Calhoun County, Alabama

Date: 6-21-16

Weather Conditions: Temp: Min 63° Max 91°
Description (Sunny, Cloudy, Overcast, etc) Partly Cloudy
Precipitation: 0 Inches

Work Performed Today (Indicate location and description of work performed and note any safety issues or deviations from the H&S plan):

Restore Borrow Area

BMP maintenance and inspection:	Yes	No
a) Inspection of engineering controls performed (ea. week and after rainfall)?	☑	☐
b) Attach weekly inspection forms (BMP and stormwater forms)?	☑	☐
c) Note any correction of defects below?	☑	☐
d) Weekly stormwater form?	☑	☐

Comments: BMPs in good condition
No damage or discharge

Dust maintenance and monitoring: 1) mg/m3

Water truck as needed for dust control

(note if dust suppression is applied)

Jason W Joiner / Jason W Joiner
Name / Signature

6-22-16
Date

CBMPP INSPECTION FIELD REPORT LOG

Contractor Name: Taylor Corp
Site Name: OU-3 Remedial Action Specific Area: Area A, C, D, E, Borrow, & PCB Cell
Site Location (City, County, State): Anniston, Calhoun County, Alabama

Date: 6-22-16

Weather Conditions: Temp: Min 68° Max 92°
Description (Sunny, Cloudy, Overcast, etc) Partly Cloudy
Precipitation: 0 Inches

Work Performed Today (Indicate location and description of work performed and note any safety issues or deviations from the H&S plan):

Restore Borrow Area

	Yes	No
BMP maintenance and inspection:		
a) Inspection of engineering controls performed (ea. week and after rainfall)?	☑	☐
b) Attach weekly inspection forms (BMP and stormwater forms)?	☑	☐
c) Note any correction of defects below?	☑	☐
d) Weekly stormwater form?	☑	☐

Comments: No damage or discharge
BMPs in good condition

Dust maintenance and monitoring: 1) mg/m³

Water truck as needed for dust control

(note if dust suppression is applied)

Jason W Joiner / Jason W Joiner
Name / Signature

6-23-16
Date

CBMPP INSPECTION FIELD REPORT LOG

Contractor Name: Taylor Corp
Site Name: OU-3 Remedial Action Specific Area: Area A, Borrow Pit
Site Location (City, County, State): Anniston, Calhoun County, Alabama

Date: 6/23/16

Weather Conditions: Temp: Min 66° Max 91°
Description (Sunny, Cloudy, Overcast, etc) Overcast
Precipitation: 0 Inches

Work Performed Today (Indicate location and description of work performed and note any safety issues or deviations from the H&S plan):

Area A - seed and try to establish growth of grass, grasswales seed
Borrow Pit - Clean up and knock down to level specs, to get ready for seed + hay

	Yes	No
BMP maintenance and inspection:		
a) Inspection of engineering controls performed (ea. week and after rainfall)?	☑	☐
b) Attach weekly inspection forms (BMP and stormwater forms)?	☑	☐
c) Note any correction of defects below?	☑	☐
d) Weekly stormwater form?	☑	☐

Comments: No damage or discharge

Dust maintenance and monitoring:

None used

(note if dust suppression is applied)

Mike Law / [signature]
Name / Signature

6/24/16
Date

CBMPP INSPECTION FIELD REPORT LOG

Contractor Name: Taylor Corp
Site Name: OU-3 Remedial Action Specific Area: Area A, C, D, E, Borrow + PCB Cell
Site Location (City, County, State): Anniston, Calhoun County, Alabama

Date: 6-24-16 **Weather Conditions:** Temp: Min 69° Max 97°
Description (Sunny, Cloudy, Overcast, etc) Partly Cloudy
Precipitation: 0 Inches

Work Performed Today (Indicate location and description of work performed and note any safety issues or deviations from the H&S plan):

Restore Borrow Area

BMP maintenance and inspection:	Yes	No
a) Inspection of engineering controls performed (ea. week and after rainfall)?	☑	☐
b) Attach weekly inspection forms (BMP and stormwater forms)?	☑	☐
c) Note any correction of defects below?	☑	☐
d) Weekly stormwater form?	☑	☐

Comments: No damage or discharge
BMPs in good condition

Dust maintenance and monitoring: i) mg/m³

water truck as needed for dust control

(note if dust suppression is applied)

Jason W Joiner / Jason W Joiner
Name / Signature

6-25-16
Date

STORMWATER INSPECITON AND MAINTENANCE REPORT FORM

Site Name: Anniston PCB Site, OU-3 Remedial Action Cover Systems

Site Location: Anniston, Calhoun County, Alabama

NPDES Permit Number: Not Applicable

Weekly Rainfall Summary:

Day:	Sun	Mon	Tues	Wed	Thurs	Fri	Sat
Date:	6-26-16	6-27-16	6-28-16	6-29-16	6-30-16		
Rainfall:	0	.10"	0	0	0		

Sampling Information:

- **Sample Type:**
- **Location:**
- **Analysis:**

NA

Inspection Results:

- **Deficiencies or Required Maintenance:**
- **Planned Corrective Action:**
- **Corrective Action Schedule:**

As Needed

- **Other Comments:**

Jason Wilson — **Signature**

7/1/16 — **Date**

CBMPP INSPECTION FIELD REPORT LOG

Contractor Name: Taylor Corp
Site Name: OU-3 Remedial Action Specific Area: Area A, C, D, E, Borrow, & PCB Cell
Site Location (City, County, State): Anniston, Calhoun County, Alabama

Date: 6-27-16 **Weather Conditions:** Temp: Min 69° Max 96°
Description (Sunny, Cloudy, Overcast, etc) T-storm
Precipitation: .10 Inches

Work Performed Today (Indicate location and description of work performed and note any safety issues or deviations from the H&S plan):

Restore Borrow Area

BMP maintenance and inspection:	Yes	No
a) Inspection of engineering controls performed (ea. week and after rainfall)?	☑	☐
b) Attach weekly inspection forms (BMP and stormwater forms)?	☑	☐
c) Note any correction of defects below?	☑	☐
d) Weekly stormwater form?	☑	☐

Comments: BMPs in good condition
No damage or discharge

Dust maintenance and monitoring: 1) mg/m3

water truck as needed for dust control

(note if dust suppression is applied)

Jason W Joiner / Jason W Joiner
Name / Signature

6-28-16
Date

CBMPP INSPECTION FIELD REPORT LOG

Contractor Name: Taylor Corp
Site Name: OU-3 Remedial Action Specific Area: Area A, C, D, E, Borrow + PCB Cell
Site Location (City, County, State): Anniston, Calhoun County, Alabama

Date: 6-28-16

Weather Conditions: Temp: Min 71° Max 90°
Description (Sunny, Cloudy, Overcast, etc) Partly Cloudy
Precipitation: 0 Inches

Work Performed Today (Indicate location and description of work performed and note any safety issues or deviations from the H&S plan):

Restore Borrow Area

BMP maintenance and inspection:	Yes	No
a) Inspection of engineering controls performed (ea. week and after rainfall)?	☑	☐
b) Attach weekly inspection forms (BMP and stormwater forms)?	☑	☐
c) Note any correction of defects below?	☑	☐
d) Weekly stormwater form?	☑	☐

Comments: No damage or discharge
BMPs in good condition

Dust maintenance and monitoring: 1) mg/m3

Water truck as needed for dust control

(note if dust suppression is applied)

Jason W. Joiner / Jason W Joiner
Name / Signature

6-29-16
Date

CBMPP INSPECTION FIELD REPORT LOG

Contractor Name: Taylor Corp
Site Name: OU-3 Remedial Action Specific Area: Area A, C, D, E, Borrow + PCB Cell
Site Location (City, County, State): Anniston, Calhoun County, Alabama

Date: 6-29-16

Weather Conditions: Temp: Min 68° Max 96°
Description (Sunny, Cloudy, Overcast, etc) Partly Cloudy
Precipitation: 0 Inches

Work Performed Today (Indicate location and description of work performed and note any safety issues or deviations from the H&S plan):

Restore Borrow Area

BMP maintenance and inspection:	Yes	No
a) Inspection of engineering controls performed (ea. week and after rainfall)?	☑	☐
b) Attach weekly inspection forms (BMP and stormwater forms)?	☑	☐
c) Note any correction of defects below?	☑	☐
d) Weekly stormwater form?	☑	☐

Comments: BMPs in good condition
No damage or discharge

Dust maintenance and monitoring: 1) mg/m3

water truck as needed for dust control

(note if dust suppression is applied)

Jason W. Joiner / Jason W. Joiner
Name / Signature

6/30/16
Date

CBMPP INSPECTION FIELD REPORT LOG

Contractor Name: Taylor Corp
Site Name: OU-3 Remedial Action Specific Area: Area A, C, D, E, Borrow, & PCB Cell
Site Location (City, County, State): Anniston, Calhoun County, Alabama

Date: 6-30-16 **Weather Conditions:** Temp: Min 65° Max 94°
Description (Sunny, Cloudy, Overcast, etc) Sunny
Precipitation: 0 Inches

Work Performed Today (Indicate location and description of work performed and note any safety issues or deviations from the H&S plan):

No work performed

BMP maintenance and inspection:	Yes	No
a) Inspection of engineering controls performed (ea. week and after rainfall)?	☑	☐
b) Attach weekly inspection forms (BMP and stormwater forms)?	☑	☐
c) Note any correction of defects below?	☑	☐
d) Weekly stormwater form?	☑	☐

Comments: BMPs in good condition
No damage or discharge

Dust maintenance and monitoring: NA

No work performed

(note if dust suppression is applied)

Jason W Joiner / Jason W Joiner
Name / Signature

7-1-16
Date

Climatological Data for ANNISTON METRO AP, AL - July 2016

Date	Temperature				HDD	CDD	Precipitation	New Snow	Snow Depth
	Maximum	Minimum	Average	Departure					
2016-07-01	96	62	79.0	-0.3	0	14	0.00	0.0	0
2016-07-02	98	69	83.5	4.1	0	19	0.00	0.0	0
2016-07-03	97	69	83.0	3.5	0	18	0.24	0.0	0
2016-07-04	97	73	85.0	5.5	0	20	0.00	0.0	0
2016-07-05	90	74	82.0	2.4	0	17	0.11	0.0	0
2016-07-06	95	73	84.0	4.3	0	19	0.00	0.0	0
2016-07-07	98	73	85.5	5.8	0	21	0.00	0.0	0
2016-07-08	99	76	87.5	7.7	0	23	T	0.0	0
2016-07-09	99	71	85.0	5.1	0	20	0.21	0.0	0
2016-07-10	92	71	81.5	1.6	0	17	1.01	0.0	0
2016-07-11	91	71	81.0	1.0	0	16	T	0.0	0
2016-07-12	92	69	80.5	0.5	0	16	T	0.0	0
2016-07-13	92	68	80.0	0.0	0	15	0.00	0.0	0
2016-07-14	94	68	81.0	0.9	0	16	T	0.0	0
2016-07-15	90	70	80.0	-0.1	0	15	0.00	0.0	0
2016-07-16	90	72	81.0	0.9	0	16	T	0.0	0
2016-07-17	93	73	83.0	2.9	0	18	0.25	0.0	0
2016-07-18	93	72	82.5	2.3	0	18	0.00	0.0	0
2016-07-19	96	73	84.5	4.3	0	20	0.09	0.0	0
2016-07-20	96	72	84.0	3.8	0	19	0.00	0.0	0
2016-07-21	97	73	85.0	4.8	0	20	0.08	0.0	0
2016-07-22	93	72	82.5	2.3	0	18	0.00	0.0	0
2016-07-23	92	75	83.5	3.3	0	19	0.13	0.0	0
2016-07-24	95	74	84.5	4.3	0	20	0.00	0.0	0
2016-07-25	96	73	84.5	4.2	0	20	0.62	0.0	0
2016-07-26	94	74	84.0	3.7	0	19	0.00	0.0	0
2016-07-27	90	75	82.5	2.2	0	18	T	0.0	0
2016-07-28	88	72	80.0	-0.3	0	15	T	0.0	0
2016-07-29	91	71	81.0	0.7	0	16	0.27	0.0	0
2016-07-30	88	71	79.5	-0.8	0	15	0.01	0.0	0
2016-07-31	90	71	80.5	0.2	0	16	0.00	0.0	0
Sum	2902	2220	-	-	0	553	3.02	0.0	-
Average	93.6	71.6	82.6	2.6	-	-	-	-	0.0
Normal	89.9	70.1	80.0	-	0	465	4.62	0.0	-

Observations for each day cover the 24 hours ending at the time given below (Local Standard Time).
Max Temperature : midnight
Min Temperature : midnight
Precipitation : midnight
Snowfall : midnight
Snow Depth : 6am

CBMPP INSPECTION FIELD REPORT LOG

Contractor Name: Taylor Corp
Site Name: OU-3 Remedial Action Specific Area: BMP Inspection
Site Location (City, County, State): Anniston, Calhoun County, Alabama

Date: 7/1/16

Weather Conditions: Temp: Min 62° Max 96°
Description (Sunny, Cloudy, Overcast, etc) SUNNY
Precipitation: 0.00 Inches

Work Performed Today (Indicate location and description of work performed and note any safety issues or deviations from the H&S plan):

CHECKED BMPs FOR DAMAGE
NO CREWS ON SITE

BMP maintenance and inspection:	Yes	No
a) Inspection of engineering controls performed (ea. week and after rainfall)?	☑	☐
b) Attach weekly inspection forms (BMP and stormwater forms)?	☑	☐
c) Note any correction of defects below?	☑	☐
d) Weekly stormwater form?	☑	☐

Removed from June folder. Should N

Comments: BMPs ARE IN WORKING CONDITION, NO DAMAGE a
DISCHARGE

Dust maintenance and monitoring: N/A
NONE USED

(note if dust suppression is applied)

MILE LILLO / [signature]
Name / Signature

7/2/16
Date

STORMWATER INSPECITON AND MAINTENANCE REPORT FORM

Site Name: Anniston PCB Site, OU-3 Remedial Action Cover Systems

Site Location: Anniston, Calhoun County, Alabama

NPDES Permit Number: Not Applicable

Weekly Rainfall Summary:

Day:	Sun	Mon	Tues	Wed	Thurs	Fri	Sat
Date:	7/3/16	7/4/16	7/5/16	7/6/16	7/7/16	7/8/16	7/9/16
Rainfall:	0.24	Ø	0.11	Ø	0	T	0.26

Sampling Information:

- **Sample Type:** N/A
- **Location:**
- **Analysis:**

Inspection Results:

- **Deficiencies or Required Maintenance:** NONE
- **Planned Corrective Action:**
- **Corrective Action Schedule:**
- **Other Comments:** DID PUT EXTRA BMP FOR UPCOMING WORKS RAIN TO STRENGTHEN AREA.

Signature

7/10/16
Date

CBMPP INSPECTION FIELD REPORT LOG

Contractor Name: Taylor Corp
Site Name: OU-3 Remedial Action Specific Area: BMP Inspection
Site Location (City, County, State): Anniston, Calhoun County, Alabama

Date: 7/3/16 **Weather Conditions:** Temp: Min 69° Max 97°
Description (Sunny, Cloudy, Overcast, etc) Overcast
Precipitation: 0.24 Inches

Work Performed Today (Indicate location and description of work performed and note any safety issues or deviations from the H&S plan):

Inspected BMP before Rain Came All in Good Shape.

BMP maintenance and inspection:	Yes	No
a) Inspection of engineering controls performed (ea. week and after rainfall)?	☑	☐
b) Attach weekly inspection forms (BMP and stormwater forms)?	☑	☐
c) Note any correction of defects below?	☑	☐
d) Weekly stormwater form?	☑	☐

Comments: BMPs good, no damage or Discharge

Dust maintenance and monitoring: N/A

None used

(note if dust suppression is applied)

Mike Lago
Name / Signature

7/4/16
Date

CBMPP INSPECTION FIELD REPORT LOG

Contractor Name: Taylor Corp
Site Name: OU-3 Remedial Action Specific Area: BMP Inspection
Site Location (City, County, State): Anniston, Calhoun County, Alabama

Date: 7/4/16 **Weather Conditions:** Temp: Min 73° Max 97°
Description (Sunny, Cloudy, Overcast, etc) cloudy
Precipitation: 0 Inches

Work Performed Today (Indicate location and description of work performed and note any safety issues or deviations from the H&S plan):

Inspected BMP, some discharge but clean due to 0.24 amount of Rain. No Damage.

BMP maintenance and inspection:	Yes	No
a) Inspection of engineering controls performed (ea. week and after rainfall)?	☑	☐
b) Attach weekly inspection forms (BMP and stormwater forms)?	☑	☐
c) Note any correction of defects below?	☑	☐
d) Weekly stormwater form?	☑	☐

Comments: BMPs are ok, some discharge but was clean, and no damage to BMPs.

Dust maintenance and monitoring: N/A

None used

(note if dust suppression is applied)

Name / Signature

7/5/16
Date

CBMPP INSPECTION FIELD REPORT LOG

Contractor Name: _____
Site Name: OU-3 Remedial Action Specific Area: BMP Inspection
Site Location (City, County, State): Anniston, Calhoun County, Alabama

Date: 7/5/16 **Weather Conditions:** Temp: Min 74 Max 90
Description (Sunny, Cloudy, Overcast, etc) overcast
Precipitation: 0.11 Inches

Work Performed Today (Indicate location and description of work performed and note any safety issues or deviations from the H&S plan):

Inspected BMPs

	Yes	No
BMP maintenance and inspection:		
a) Inspection of engineering controls performed (ea. week and after rainfall)?	☑	☐
b) Attach weekly inspection forms (BMP and stormwater forms)?	☑	☐
c) Note any correction of defects below?	☑	☐
d) Weekly stormwater form?	☑	☐

Comments: BMPs are in Good Condition, No damage.

Dust maintenance and monitoring: n/a

(note if dust suppression is applied)

Mike Liles
Name / Signature

7/6/16
Date

CBMPP INSPECTION FIELD REPORT LOG

Contractor Name: Taylor Corp
Site Name: OU-3 Remedial Action Specific Area: BMP Inspection
Site Location (City, County, State): Anniston, Calhoun County, Alabama

Date: 7/6/16 **Weather Conditions:** Temp: Min 73° Max 93°
Description (Sunny, Cloudy, Overcast, etc) overcast
Precipitation: 0.00 Inches

Work Performed Today (Indicate location and description of work performed and note any safety issues or deviations from the H&S plan):

BMP Inspection

BMP maintenance and inspection:	Yes	No
a) Inspection of engineering controls performed (ea. week and after rainfall)?	☑	☐
b) Attach weekly inspection forms (BMP and stormwater forms)?	☑	☐
c) Note any correction of defects below?	☑	☐
d) Weekly stormwater form?	☑	☐

Comments: BMPs are in Good shape, no discharge or damage.

Dust maintenance and monitoring: N/A

None used

(note if dust suppression is applied)

Mike Lolo / Mike Lolo
Name / Signature

7/7/16
Date

CBMPP INSPECTION FIELD REPORT LOG

Contractor Name: _____
Site Name: OU-3 Remedial Action Specific Area: _____
Site Location (City, County, State): Anniston, Calhoun County, Alabama

Date: 7/7/16 **Weather Conditions:** Temp: Min 73° Max 98°
Description (Sunny, Cloudy, Overcast, etc) Cloudy
Precipitation: 0.00 inches

Work Performed Today (Indicate location and description of work performed and note any safety issues or deviations from the H&S plan):

BMP Inspection

BMP maintenance and inspection:	Yes	No
a) Inspection of engineering controls performed (ea. week and after rainfall)?	☑	☐
b) Attach weekly inspection forms (BMP and stormwater forms)?	☑	☐
c) Note any correction of defects below?	☑	☐
d) Weekly stormwater form?	☑	☐

Comments: NO DAMAGE FOUND, OR DISCHARGE.

Dust maintenance and monitoring: N/A

NONE USED

(note if dust suppression is applied)

MIKE LEO
Name / Signature

7/8/16
Date

CBMPP INSPECTION FIELD REPORT LOG

Contractor Name: Taylor Corp
Site Name: OU-3 Remedial Action Specific Area: BMP Inspection
Site Location (City, County, State): Anniston, Calhoun County, Alabama

Date: 7/8/16 **Weather Conditions:** Temp: Min 76° Max 99°
Description (Sunny, Cloudy, Overcast, etc) Cloudy
Precipitation: T Inches

Work Performed Today (Indicate location and description of work performed and note any safety issues or deviations from the H&S plan):

BMP Inspection

	Yes	No
BMP maintenance and inspection:		
a) Inspection of engineering controls performed (ea. week and after rainfall)?	☑	☐
b) Attach weekly inspection forms (BMP and stormwater forms)?	☑	☐
c) Note any correction of defects below?	☑	☐
d) Weekly stormwater form?	☑	☐

Comments: No damage or Discharge to BMPs

Dust maintenance and monitoring: N/A

Not Used

(note if dust suppression is applied)

Name / Signature

7/8/16
Date

CBMPP INSPECTION FIELD REPORT LOG

Contractor Name: Taylor Corp
Site Name: OU-3 Remedial Action Specific Area: BMP Inspection
Site Location (City, County, State): Anniston, Calhoun County, Alabama

Date: 7/9/16

Weather Conditions: Temp: Min 71° Max 99
Description (Sunny, Cloudy, Overcast, etc) ~~Cloudy~~ Cloudy
Precipitation: 0.21 Inches

Work Performed Today (Indicate location and description of work performed and note any safety issues or deviations from the H&S plan):

BMP Inspection

BMP maintenance and inspection:	Yes	No
a) Inspection of engineering controls performed (ea. week and after rainfall)?	☑	☐
b) Attach weekly inspection forms (BMP and stormwater forms)?	☑	☐
c) Note any correction of defects below?	☑	☐
d) Weekly stormwater form?	☑	☐

Comments: Put extra barriers for upcoming Rain Event

Dust maintenance and monitoring: N/A

None used

(note if dust suppression is applied)

[signature] / [signature]
Name / Signature

7/10/16
Date

STORMWATER INSPECITON AND MAINTENANCE REPORT FORM

Site Name: Anniston PCB Site, OU-3 Remedial Action Cover Systems

Site Location: Anniston, Calhoun County, Alabama

NPDES Permit Number: Not Applicable

Weekly Rainfall Summary:

Day:	Sun	Mon	Tues	Wed	Thurs	Fri	Sat
Date:	7/10/16	7/11/16	7/12/16	7/13/16	7/14/16	7/15/16	7/16/16
Rainfall:	1.01	T	T	Ø	T	Ø	T

Sampling Information:

- **Sample Type:**
- **Location:** N/A
- **Analysis:**

Inspection Results:

- **Deficiencies or Required Maintenance:** BMPS WERE DAMAGED IN 3 AREAS, DUE TO STRONG RAINSTORM THAT DIDN'T LAST ALL DAY BUT HIGH VELOCITY WINDS ALONG WITH RAIN CAUSED BLOWOUTS AND DISCHARGE (clean)
- **Planned Corrective Action:** ORDERED NEW MATERIAL FOR DEFICIENT AREAS
- **Corrective Action Schedule:** BMPS WERE ALL FIXED BY 7/15/16 BUT STARTED ON 7/13/16.
- **Other Comments:** Built up BMPS, doubled up in some areas for reinforcement due to BMP being on a downhill road that would recieve the most force if major rain event.

Signature

7/18/16
Date

CBMPP INSPECTION FIELD REPORT LOG

Contractor Name: Taylor Corp
Site Name: OU-3 Remedial Action Specific Area:
Site Location (City, County, State): Anniston, Calhoun County, Alabama

Date: 7/10/16 **Weather Conditions:** Temp: Min 71° Max 92°
Description (Sunny, Cloudy, Overcast, etc)
Precipitation: 1.01 Inches

Work Performed Today (Indicate location and description of work performed and note any safety issues or deviations from the H&S plan):

	Yes	No
BMP maintenance and inspection:		
a) Inspection of engineering controls performed (ea. week and after rainfall)?	☐	☐
b) Attach weekly inspection forms (BMP and stormwater forms)?	☐	☐
c) Note any correction of defects below?	☐	☐
d) Weekly stormwater form?	☐	☐

Comments:

Dust maintenance and monitoring:

(note if dust suppression is applied)

Name / Signature

7/11/16
Date

CBMPP INSPECTION FIELD REPORT LOG

Contractor Name: TA/Hoz Corp
Site Name: OU-3 Remedial Action Specific Area: Borrow Area, Area E
Site Location (City, County, State): Anniston, Calhoun County, Alabama

Date: 7/11/16 **Weather Conditions:** Temp: Min 71° Max 91°
Description (Sunny, Cloudy, Overcast, etc) OVERCAST
Precipitation: T Inches

Work Performed Today (Indicate location and description of work performed and note any safety issues or deviations from the H&S plan):

Area E Wall being worked on for smooth Grade and brought up to specs.
Borrow Area - Continuation of Borrow Pit to be backfilled Until Completion

	Yes	No
BMP maintenance and inspection:		
a) Inspection of engineering controls performed (ea. week and after rainfall)?	☑	☐
b) Attach weekly inspection forms (BMP and stormwater forms)?	☑	☐
c) Note any correction of defects below?	☑	☐
d) Weekly stormwater form?	☑	☐

Comments: BMPs are currently holding posture, no discharge or heavy damage.

Dust maintenance and monitoring: None as Requested
Water source used as needed for dust control

(note if dust suppression is applied)

Nele Lalo / [signature]
Name / Signature

7/12/16
Date

CBMPP INSPECTION FIELD REPORT LOG

Contractor Name: Taylor Corp
Site Name: OU-3 Remedial Action Specific Area: Borrow Area, Area E
Site Location (City, County, State): Anniston, Calhoun County, Alabama

Date: 7/12/16 **Weather Conditions:** Temp: Min 69° Max 92°
Description (Sunny, Cloudy, Overcast, etc)
Precipitation: T Inches

Work Performed Today (Indicate location and description of work performed and note any safety issues or deviations from the H&S plan):

Area E wall continued to be worked on to bring to smooth grade and specs.
Borrow Area - Continued to backfill until desired depth is met.

	Yes	No
BMP maintenance and inspection:		
a) Inspection of engineering controls performed (ea. week and after rainfall)?	☑	☐
b) Attach weekly inspection forms (BMP and stormwater forms)?	☑	☐
c) Note any correction of defects below?	☑	☐
d) Weekly stormwater form?	☑	☐

Comments: BMPs have been noticeably damaged, there has been discharge but clean. Plan of action is to order more materials needed to mitigate any issues with structure of BMPs

Dust maintenance and monitoring:

Water source used as needed for dust control

(note if dust suppression is applied)

Mike Lilo, [signature]
Name / Signature

7/13/16
Date

CBMPP INSPECTION FIELD REPORT LOG

Contractor Name: Taylor Corp
Site Name: OU-3 Remedial Action Specific Area: Borrow Area, Area E
Site Location (City, County, State): Anniston, Calhoun County, Alabama

Date: 7/13/16

Weather Conditions: Temp: Min 68 Max 92°
Description (Sunny, Cloudy, Overcast, etc) Cloudy / Sunny
Precipitation: 0.00 Inches

Work Performed Today (Indicate location and description of work performed and note any safety issues or deviations from the H&S plan):

Borrow Area - Continuation of Backfill of the Pit to desired Depth for Completion.
Area E Wall continued to be worked on until finalization of Wall to specs or code.

BMP maintenance and inspection:	Yes	No
a) Inspection of engineering controls performed (ea. week and after rainfall)?	☑	☐
b) Attach weekly inspection forms (BMP and stormwater forms)?	☑	☐
c) Note any correction of defects below?	☑	☐
d) Weekly stormwater form?	☑	☐

Comments: BMPs have been damaged on Clydesdale Road, Road Alongside Area A, also over the Manhole drains East of Area A towards the Plant.

Materials were brought onsite and all areas have been fixed and upgraded for stronger resistance due to downhill drainage in some areas.

* During or after hours no TC personnell are working in Area A or on the Road West of Area A specifically by the Swing Gate. But BMPs have been moved due to open + closing of fence also on that Road have been possibly damaged due to driving over them. This is why heavy mitigated procedure was done to those areas to prevent anykind of future discharge that may not be clean.

Dust maintenance and monitoring: None

Water source used to control dust as needed.

(note if dust suppression is applied)

Mike Lilo / [signature]
Name / Signature

7/14/16
Date

CBMPP INSPECTION FIELD REPORT LOG

Contractor Name: Taylor Corp
Site Name: OU-3 Remedial Action Specific Area: Borrow Area / Area E
Site Location (City, County, State): Anniston, Calhoun County, Alabama

Date: 7/14/16 **Weather Conditions:** Temp: Min 68° Max 94°
Description (Sunny, Cloudy, Overcast, etc) Sunny / Clear
Precipitation: T Inches

Work Performed Today (Indicate location and description of work performed and note any safety issues or deviations from the H&S plan):

Borrow Area continues to be backfilled until desired depth is met.
Area E - Wall is still being worked on to smooth grade for the desired specs

	Yes	No
BMP maintenance and inspection:		
a) Inspection of engineering controls performed (ea. week and after rainfall)?	☑	☐
b) Attach weekly inspection forms (BMP and stormwater forms)?	☑	☐
c) Note any correction of defects below?	☑	☐
d) Weekly stormwater form?	☑	☐

Comments: BMPs were fixed as others were checked for structural damage that could possibly cause any discharge. More waddles were placed in areas that needed them for stronger support from heavy rains / thunderstorms with high velocity of wind as well.

Dust maintenance and monitoring:

Water source used as needed to maintain dust control.

(note if dust suppression is applied)

Mike Lilly
Name / Signature

7/15/16
Date

CBMPP INSPECTION FIELD REPORT LOG

Contractor Name: TAYLOR CORP
Site Name: OU-3 Remedial Action Specific Area: BORROW AREA, AREA E
Site Location (City, County, State): Anniston, Calhoun County, Alabama

Date: 7/15/16 **Weather Conditions:** Temp: Min 70 Max 90
Description (Sunny, Cloudy, Overcast, etc) SUNNY
Precipitation: 0.00 Inches

Work Performed Today (Indicate location and description of work performed and note any safety issues or deviations from the H&S plan):

BORROW AREA - CONTINUED TO HAUL SOIL AND BRING IT TO DESIRED DEPTH
AREA E - WALL STILL BEING WORKED ON FOR ANY IMPERFECTIONS AND BROUGHT UP TO CODE

	Yes	No
BMP maintenance and inspection:		
a) Inspection of engineering controls performed (ea. week and after rainfall)?	☑	☐
b) Attach weekly inspection forms (BMP and stormwater forms)?	☑	☐
c) Note any correction of defects below?	☑	☐
d) Weekly stormwater form?	☑	☐

Comments: BMPS ARE IN WORKING ORDER, NO STRUCTURAL DAMAGE OR DISCHARGE

Dust maintenance and monitoring: NONE.
WATER SOURCE USED AS NEEDED

(note if dust suppression is applied)

MIKE LILLO
Name / Signature

7/16/16
Date

CBMPP INSPECTION FIELD REPORT LOG

Contractor Name: Taylor Corp
Site Name: OU-3 Remedial Action Specific Area: BORROW AREA / AREA E
Site Location (City, County, State): Anniston, Calhoun County, Alabama

Date: 7/16/16

Weather Conditions: Temp: Min 72 Max 90
Description (Sunny, Cloudy, Overcast, etc) SUNNY
Precipitation: T Inches

Work Performed Today (Indicate location and description of work performed and note any safety issues or deviations from the H&S plan):

BORROW AREA CONTINUED to be backfilled until desired depth
AREA E WALL still being worked on to be brought up to specs

BMP maintenance and inspection:	Yes	No
a) Inspection of engineering controls performed (ea. week and after rainfall)?	☑	☐
b) Attach weekly inspection forms (BMP and stormwater forms)?	☑	☐
c) Note any correction of defects below?	☑	☐
d) Weekly stormwater form?	☑	☐

Comments: BMPs ARE IN WORKING ORDER AND HAVE HAD NO DISCHARGES

Dust maintenance and monitoring: NONE
WATER SOURCE USED AS NEEDED FOR DUST Control

(note if dust suppression is applied)

MIKE LILLO / [signature]
Name / Signature

7/17/16
Date

STORMWATER INSPECITON AND MAINTENANCE REPORT FORM

Site Name: Anniston PCB Site, OU-3 Remedial Action Cover Systems

Site Location: Anniston, Calhoun County, Alabama

NPDES Permit Number: Not Applicable

Weekly Rainfall Summary:

Day:	Sun	Mon	Tues	Wed	Thurs	Fri	Sat
Date:	7/17/16	7/18/16	7/19/16	7/20/16	7/21/16	7/22/16	7/23/16
Rainfall:	0.25	0	0.09	0	0.08	0	0.13

Sampling Information:

- **Sample Type:**
- **Location:**
- **Analysis:**

N/A

Inspection Results:

- **Deficiencies or Required Maintenance:** NEW GATE AREA BMPs WERE MOVED, DAMAGED, AND THERE WAS CLEAN DISCHARGE
- **Planned Corrective Action:** FIX BMPs
- **Corrective Action Schedule:** 7/20/16 – 7/23/16
- **Other Comments:** ALL BMPs FIXED AND IN WORKING ORDER.

Signature

7/25/16
Date

CBMPP INSPECTION FIELD REPORT LOG

Contractor Name: Taylor Corporation
Site Name: OU-3 Remedial Action Specific Area: No work performed
Site Location (City, County, State): Anniston, Calhoun County, Alabama

Date: 7/17/16

Weather Conditions: Temp: Min 73° Max 93°
Description (Sunny, Cloudy, Overcast, etc) Overcast
Precipitation: 0.25 Inches

Work Performed Today (Indicate location and description of work performed and note any safety issues or deviations from the H&S plan):

	Yes	No
BMP maintenance and inspection:		
a) Inspection of engineering controls performed (ea. week and after rainfall)?	☐	☐
b) Attach weekly inspection forms (BMP and stormwater forms)?	☐	☐
c) Note any correction of defects below?	☐	☐
d) Weekly stormwater form?	☐	☐

Comments:

Dust maintenance and monitoring:

(note if dust suppression is applied)

Nicole L. Lee
Name / Signature

7/17/16
Date

CBMPP INSPECTION FIELD REPORT LOG

Contractor Name: TAYLOR CORP
Site Name: OU-3 Remedial Action Specific Area: BORROW AREA, AREA E
Site Location (City, County, State): Anniston, Calhoun County, Alabama

Date: 7/18/16

Weather Conditions: Temp: Min 72° Max 93°
Description (Sunny, Cloudy, Overcast, etc) CLEAR/SUNNY/cloudy
Precipitation: 0.00 Inches

Work Performed Today (Indicate location and description of work performed and note any safety issues or deviations from the H&S plan):

AREA E WALL (Concrete) Still being worked on to complete ANY deficiency not to spec.
BORROW AREA - Continued to backfill area until desired depth is met.

	Yes	No
BMP maintenance and inspection:		
a) Inspection of engineering controls performed (ea. week and after rainfall)?	☑	☐
b) Attach weekly inspection forms (BMP and stormwater forms)?	☑	☐
c) Note any correction of defects below?	☑	☐
d) Weekly stormwater form?	☑	☐

Comments: BMP'S ARE INTACT AND IN FUNCTIONAL ORDER, CURRENTLY NO DISCHARGES.

Dust maintenance and monitoring: 1 MONITOR WAS USED JOSH HAS READINGS
WATER SOURCE USED TO MONITOR DUST CONTROL AS NEEDED

(note if dust suppression is applied)

MIKE LILLO / Mike Lillo
Name / Signature

7/19/16
Date

CBMPP INSPECTION FIELD REPORT LOG

Contractor Name: Taylor Corp
Site Name: OU-3 Remedial Action Specific Area: Borrow Area / Parking Lot curb
Site Location (City, County, State): Anniston, Calhoun County, Alabama

Date: 7/19/16 **Weather Conditions:** Temp: Min 73° Max 96°
Description (Sunny, Cloudy, Overcast, etc) Overcast
Precipitation: 0.09 Inches

Work Performed Today (Indicate location and description of work performed and note any safety issues or deviations from the H&S plan):

Borrow area almost completed, still backfilling haul soil that is being dug from top side of borrow area.
Parking Lot - work is being performed to dress up face of entire curb in parking lot area.

BMP maintenance and inspection:	Yes	No
a) Inspection of engineering controls performed (ea. week and after rainfall)?	☑	☐
b) Attach weekly inspection forms (BMP and stormwater forms)?	☑	☐
c) Note any correction of defects below?	☑	☐
d) Weekly stormwater form?	☑	☐

Comments: BMPs are still in working order, there have been no discharges, also no rain to test current BMPs put in place.

Dust maintenance and monitoring: 1. Monitor was used Josh has readings
Dust control performed by water source as needed.

(note if dust suppression is applied)

Mike Lee / Mike Lee
Name / Signature

7/20/16
Date

CBMPP INSPECTION FIELD REPORT LOG

Contractor Name: Taylor Corp
Site Name: OU-3 Remedial Action Specific Area: Parking Lot, Pit BEFORE Borrow Area
Site Location (City, County, State): Anniston, Calhoun County, Alabama

Date: 7/20/16

Weather Conditions: Temp: Min 72° Max 96
Description (Sunny, Cloudy, Overcast, etc) SUNNY
Precipitation: 0.00 Inches

Work Performed Today (Indicate location and description of work performed and note any safety issues or deviations from the H&S plan):

Parking Lot curb still being worked on to spec, Rubbing ds [redacted] slab to new.

AREA BEFORE BORROW IS BEING DRESSED UP FROM SOIL BEING DUG & BROUGHT TO BORROW AREA.

	Yes	No
BMP maintenance and inspection:		
a) Inspection of engineering controls performed (ea. week and after rainfall)?	☑	☐
b) Attach weekly inspection forms (BMP and stormwater forms)?	☑	☐
c) Note any correction of defects below?	☑	☐
d) Weekly stormwater form?	☑	☐

Comments: BMPs ARE IN WORKING ORDER, NOTED ALSO THERE WAS HAY CAUGHT IN BETWEEN SILT FENCE SOUTH OF AREA A. EAST

Dust maintenance and monitoring:

WATER SOURCE USED AS NECESSARY FOR ANY DUST CONTROL

(note if dust suppression is applied)

MIKE LILLO / Mike Lillo
Name / Signature

7/21/16
Date

CBMPP INSPECTION FIELD REPORT LOG

Contractor Name: TAYLOR CORP
Site Name: OU-3 Remedial Action Specific Area: BORROW AREA + PIT / PARKING LOT
Site Location (City, County, State): Anniston, Calhoun County, Alabama

Date: 7/21/16 **Weather Conditions:** Temp: Min 73° Max 97°
Description (Sunny, Cloudy, Overcast, etc) SUNNY
Precipitation: 0.08 Inches

Work Performed Today (Indicate location and description of work performed and note any safety issues or deviations from the H&S plan):

GRASSWORKS SPREAD HYDROSEED, HAY, WATER INTO BORROW AREA AND AREA PRIOR TO GOING INTO BORROW AREA, WORK WAS COMPLETED SAME DAY.
PARKING LOT - CONTINUING TO PUT CONCRETE TO BLEND IN THE OLD WITH THE NEW SLABS.

BMP maintenance and inspection:	Yes	No
a) Inspection of engineering controls performed (ea. week and after rainfall)?	☑	☐
b) Attach weekly inspection forms (BMP and stormwater forms)?	☑	☐
c) Note any correction of defects below?	☑	☐
d) Weekly stormwater form?	☑	☐

Comments: BMPS ARE IN WORKING ORDER, NO DISCHARGE OR HEAVY DAMAGE

* IT RAINED THAT NIGHT BUT NO SIGNIFICANT RAIN AMOUNT DEEMED AS A RECORDABLE

Dust maintenance and monitoring: N/A
WATER SOURCE USED AS NEEDED FOR DUST SUPPRESSION
(note if dust suppression is applied)

MIKE LILES / [signature]
Name / Signature

7/ /16
Date

CBMPP INSPECTION FIELD REPORT LOG

Contractor Name: Taylor Corp
Site Name: OU-3 Remedial Action Specific Area: Parking Lot
Site Location (City, County, State): Anniston, Calhoun County, Alabama

Date: 7/22/16

Weather Conditions: Temp: Min 72° Max 93°
Description (Sunny, Cloudy, Overcast, etc) OVERCAST
Precipitation: 0.00 Inches

Work Performed Today (Indicate location and description of work performed and note any safety issues or deviations from the H&S plan):

Parking Lot still being worked on to match existing concrete with new slab poured on top.

BMP maintenance and inspection:	Yes	No
a) Inspection of engineering controls performed (ea. week and after rainfall)?	☑	☐
b) Attach weekly inspection forms (BMP and stormwater forms)?	☑	☐
c) Note any correction of defects below?	☑	☐
d) Weekly stormwater form?	☑	☐

Comments: BMPs by the new gate weren't damaged just moved but no rain event occurred significant enough to move 60 lb hay bales also waddles and sandbags on right side of the new gate, all of those BMPs were put back in place and more sandbags in place.

Dust maintenance and monitoring:

Water source used as needed for dust suppression.

(note if dust suppression is applied)

Mike Lilo / [signature]
Name / Signature

7/23/16
Date

CBMPP INSPECTION FIELD REPORT LOG

Contractor Name: Taylor Corp
Site Name: OU-3 Remedial Action Specific Area: Parking Lot
Site Location (City, County, State): Anniston, Calhoun County, Alabama

Date: 7/23/16

Weather Conditions: Temp: Min 75 Max 92
Description (Sunny, Cloudy, Overcast, etc) OVERCAST
Precipitation: 0.13 Inches

Work Performed Today (Indicate location and description of work performed and note any safety issues or deviations from the H&S plan):

Parking lot area still being worked to complete face of curb to blend old with new slab

BMP maintenance and inspection:	Yes	No
a) Inspection of engineering controls performed (ea. week and after rainfall)?	☑	☐
b) Attach weekly inspection forms (BMP and stormwater forms)?	☑	☐
c) Note any correction of defects below?	☑	☐
d) Weekly stormwater form?	☑	☐

Comments: BMPS repaired in one area, rest are intact and no discharge or current heavy damage

Dust maintenance and monitoring: N/A

No water source used for dust suppression

(note if dust suppression is applied)

Mike Lilo / [signature]
Name / Signature

7/24/16
Date

STORMWATER INSPECITON AND MAINTENANCE REPORT FORM

Site Name: Anniston PCB Site, OU-3 Remedial Action Cover Systems

Site Location: Anniston, Calhoun County, Alabama

NPDES Permit Number: Not Applicable

Weekly Rainfall Summary:

Day:	Sun	Mon	Tues	Wed	Thurs	Fri	Sat
Date:	7/24/16	7/25/16	7/26/16	7/27/16	7/28/16	7/29/16	7/30/16
Rainfall:	0	.062	0	T	T	0.27	0.01

Sampling Information:

- **Sample Type:**
- **Location:**
- **Analysis:**

} NA

Inspection Results:

- **Deficiencies or Required Maintenance:** BMPs ARE IN WORKING ORDER.
- **Planned Corrective Action:** N/A
- **Corrective Action Schedule:** N/A
- **Other Comments:** GRASSWORKS CAME AND RE-SEEDED PCB CELLS + WATER, ALSO RESEEDED AREA A + WATER PLUS ALSO USED INSECTICIDE to ELIMINATE ANYTHING that WOULD CAUSE FUTURE PROBLEM WITH GRASS GROWTH.

Signature _____ Date 8/1/16

CBMPP INSPECTION FIELD REPORT LOG

Contractor Name: TAYLOR
Site Name: OU-3 Remedial Action Specific Area: Inspection
Site Location (City, County, State): Anniston, Calhoun County, Alabama

Date: 7/24/16 **Weather Conditions:** Temp: Min 74° Max 95°
Description (Sunny, Cloudy, Overcast, etc) Sunny
Precipitation: 0.00 Inches

Work Performed Today (Indicate location and description of work performed and note any safety issues or deviations from the H&S plan):

Safety checked BMP around plant and found no damage from rain events that occured (no recordable). Took 50min to inspect all due to no damages.

	Yes	No
BMP maintenance and inspection:		
a) Inspection of engineering controls performed (ea. week and after rainfall)?	☑	☐
b) Attach weekly inspection forms (BMP and stormwater forms)?	☑	☐
c) Note any correction of defects below?	☑	☐
d) Weekly stormwater form?	☑	☐

Comments: BMPs are still intact and no heavy discharge or damage noticeable.

Dust maintenance and monitoring: NONE

NONE

(note if dust suppression is applied)

Mike Lino
Name / Signature

7/25/16
Date

CBMPP INSPECTION FIELD REPORT LOG

Contractor Name: Taylor Corp
Site Name: OU-3 Remedial Action Specific Area: Parking Lot
Site Location (City, County, State): Anniston, Calhoun County, Alabama

Date: 7/25/16

Weather Conditions: Temp: Min 73° Max 96°
Description (Sunny, Cloudy, Overcast, etc) Cloudy / Sunny / Rain
Precipitation: 0.62 Inches

Work Performed Today (Indicate location and description of work performed and note any safety issues or deviations from the H&S plan):

Parking Lot still being worked on to blend ds slab w/ new.

BMP maintenance and inspection:	Yes	No
a) Inspection of engineering controls performed (ea. week and after rainfall)?	☑	☐
b) Attach weekly inspection forms (BMP and stormwater forms)?	☑	☐
c) Note any correction of defects below?	☑	☐
d) Weekly stormwater form?	☑	☐

Comments: BMPs held up after 0.62 inches of Rainfall. No Damages to Pre or Discharge that was not clean.

Dust maintenance and monitoring: N/A

No water source needed for those areas about being worked.

(note if dust suppression is applied)

Name / Signature

7/26/16
Date

CBMPP INSPECTION FIELD REPORT LOG

Contractor Name: Taylor Corp
Site Name: OU-3 Remedial Action
Specific Area: Parking Lot / PCB Cell
Site Location (City, County, State): Anniston, Calhoun County, Alabama

Date: 7/26/16

Weather Conditions: Temp: Min 74° Max 94°
Description (Sunny, Cloudy, Overcast, etc) Sunny
Precipitation: 0.00 Inches

Work Performed Today (Indicate location and description of work performed and note any safety issues or deviations from the H&S plan):

Parking Lot - Curb still being worked on to blend old slab w/new
PCB Cell - Grassworks Respraying area with seed + water

BMP maintenance and inspection:	Yes	No
a) Inspection of engineering controls performed (ea. week and after rainfall)?	☐	☐
b) Attach weekly inspection forms (BMP and stormwater forms)?	☐	☐
c) Note any correction of defects below?	☐	☐
d) Weekly stormwater form?	☐	☐

Comments: BMPs are still in working order, no damage or discharge.

Dust maintenance and monitoring: N/A
No water source used on this day for dust control

(note if dust suppression is applied)

Mike Lillo / [signature]
Name / Signature

7/27/16
Date

CBMPP INSPECTION FIELD REPORT LOG

Contractor Name: Taylor Corp
Site Name: OU-3 Remedial Action Specific Area: Parking Lot, Area A, PCB
Site Location (City, County, State): Anniston, Calhoun County, Alabama

Date: 7/27/16 **Weather Conditions:** Temp: Min 75° Max 90°
Description (Sunny, Cloudy, Overcast, etc) Sunny
Precipitation: 1 Inches

Work Performed Today (Indicate location and description of work performed and note any safety issues or deviations from the H&S plan):

Parking Lot - Curb still being worked to blend old slab with new
Area A - Grasworks re-disced the area before spraying any seed or insecticide

	Yes	No
BMP maintenance and inspection:		
a) Inspection of engineering controls performed (ea. week and after rainfall)?	☐	☐
b) Attach weekly inspection forms (BMP and stormwater forms)?	☐	☐
c) Note any correction of defects below?	☐	☐
d) Weekly stormwater form?	☐	☐

Comments: BMPs are still in working condition, no damage or discharge

Dust maintenance and monitoring: N/A
No dust control used, will use as needed

(note if dust suppression is applied)

Mike Lucas
Name / Signature

7/28/16
Date

CBMPP INSPECTION FIELD REPORT LOG

Contractor Name: Taylor Corp
Site Name: OU-3 Remedial Action Specific Area: Parking Lot, Area A
Site Location (City, County, State): Anniston, Calhoun County, Alabama

Date: 7/28/16 **Weather Conditions:** Temp: Min 72° Max 88°
Description (Sunny, Cloudy, Overcast, etc) Cloudy
Precipitation: T Inches

Work Performed Today (Indicate location and description of work performed and note any safety issues or deviations from the H&S plan):

Parking Lot still being worked on to blend old slab with new alongside curb Area.
Area A - sprinklers were set out to help with watering but Hydrant stopped 10 min after water was flowing. Need another plan of attack on that issue dealing with getting water as needed for grass growth.

	Yes	No
BMP maintenance and inspection:		
a) Inspection of engineering controls performed (ea. week and after rainfall)?	☑	☐
b) Attach weekly inspection forms (BMP and stormwater forms)?	☑	☐
c) Note any correction of defects below?	☑	☐
d) Weekly stormwater form?	☐	☐

Comments: BMPs are in place, no damage or discharge.

Dust maintenance and monitoring:

No water source used for dust control

(note if dust suppression is applied)

Mike Cline
Name / Signature

7/29/16
Date

CBMPP INSPECTION FIELD REPORT LOG

Contractor Name: Taylor Corp
Site Name: OU-3 Remedial Action Specific Area: Parking Lot, AREA A
Site Location (City, County, State): Anniston, Calhoun County, Alabama

Date: 7/29/16

Weather Conditions: Temp: Min 71° Max 91°
Description (Sunny, Cloudy, Overcast, etc) Cloudy / Rain
Precipitation: 0.27 Inches

Work Performed Today (Indicate location and description of work performed and note any safety issues or deviations from the H&S plan):

Parking Lot - still blending curbs old slab with the new one.
AREA A - Sprinklers being used as a source of water to cover dirt patches within area to promote growth.

	Yes	No
BMP maintenance and inspection:		
a) Inspection of engineering controls performed (ea. week and after rainfall)?	☑	☐
b) Attach weekly inspection forms (BMP and stormwater forms)?	☑	☐
c) Note any correction of defects below?	☑	☐
d) Weekly stormwater form?	☑	☐

Comments: BMPs Inspected, No apparent damage, Minimal Rain, So clean discharge.

Dust maintenance and monitoring: N/A
No water source needed for dust control

(note if dust suppression is applied)

Mele Lilo / Mele Lilo
Name / Signature

7/30/16
Date

CBMPP INSPECTION FIELD REPORT LOG

Contractor Name: Taylor Corp
Site Name: OU-3 Remedial Action Specific Area: North Side Road, Area A
Site Location (City, County, State): Anniston, Calhoun County, Alabama

Date: 7/30/16 **Weather Conditions:** Temp: Min 71° Max 88°
Description (Sunny, Cloudy, Overcast, etc) Cloudy
Precipitation: 0.01 Inches

Work Performed Today (Indicate location and description of work performed and note any safety issues or deviations from the H&S plan):

Parking LOT - Curb still being blended to cover o/o with the new slab.

	Yes	No
BMP maintenance and inspection:		
a) Inspection of engineering controls performed (ea. week and after rainfall)?	☑	☐
b) Attach weekly inspection forms (BMP and stormwater forms)?	☑	☐
c) Note any correction of defects below?	☑	☐
d) Weekly stormwater form?	☑	☐

Comments: BMPs have not been damaged and no discharge has been released.

* Note that by the new gate in Area A, there is starting to be a build up of mud/dirt against BMP, only solution I have is to shovel excess and spread back along side above Riprap.

Dust maintenance and monitoring: N/A

No dust control needed during this time

(note if dust suppression is applied)

Mike Lido / Mike Lido
Name / Signature

8/1/16
Date

STORMWATER INSPECITON AND MAINTENANCE REPORT FORM

Site Name: Anniston PCB Site, OU-3 Remedial Action Cover Systems

Site Location: Anniston, Calhoun County, Alabama

NPDES Permit Number: Not Applicable

Weekly Rainfall Summary:

Day:	Sun	Mon	Tues	Wed	Thurs	Fri	Sat
Date:	7/31/16	8/1/16	8/2/16	8/3/16	8/4/16	8/5/16	8/6/16
Rainfall:	0.00	Ø	0.94	Ø	T	T	0.01

Sampling Information:

- **Sample Type:** N/A
- **Location:**
- **Analysis:**

Inspection Results:

- **Deficiencies or Required Maintenance:** BMPs damaged by machine Gate.
- **Planned Corrective Action:** Re structure them back and strengthen them with new and more.
- **Corrective Action Schedule:** 8/3/16 – until complete
- **Other Comments:** 7/31/16 Daily is in with last week of the last Month

Signature

8/7/16
Date

CBMPP INSPECTION FIELD REPORT LOG

Contractor Name: Taylor Corp
Site Name: OU-3 Remedial Action
Specific Area: Northside Road of Area A / Area A
Site Location (City, County, State): Anniston, Calhoun County, Alabama

Date: 8/1/16

Weather Conditions: Temp: Min 72° Max 95°
Description (Sunny, Cloudy, Overcast, etc) Sunny/Cloudy
Precipitation: 0.00 Inches

Work Performed Today (Indicate location and description of work performed and note any safety issues or deviations from the H&S plan):

Curb on Northside Road is also being worked to blend old slab with the new.

Area A - Sprinklers being used to promote grass growth in some patchy areas.

	Yes	No
BMP maintenance and inspection:		
a) Inspection of engineering controls performed (ea. week and after rainfall)?	☑	☐
b) Attach weekly inspection forms (BMP and stormwater forms)?	☑	☐
c) Note any correction of defects below?	☑	☐
d) Weekly stormwater form?	☑	☐

Comments: BMPs were Maxed by Northside Gate by Area A. No real damage or Discharge.

Dust maintenance and monitoring: N/A

No dust control needed, No one working in those completed areas.

(note if dust suppression is applied)

Mike Lilly
Name / Signature

8/2/16
Date

CBMPP INSPECTION FIELD REPORT LOG

Contractor Name: Taylor Corp
Site Name: OU-3 Remedial Action Specific Area: Northside Road Curb, AREA A
Site Location (City, County, State): Anniston, Calhoun County, Alabama

Date: 8/2/16

Weather Conditions: Temp: Min 72° Max 92°
Description (Sunny, Cloudy, Overcast, etc) Cloudy
Precipitation: 0.94 Inches

Work Performed Today (Indicate location and description of work performed and note any safety issues or deviations from the H&S plan):

Curb on Northside continued today to blend in and smooth out curb.
AREA A - WAS being WATERED until it started to really Rain between 12:30-ON.

	Yes	No
BMP maintenance and inspection:		
a) Inspection of engineering controls performed (ea. week and after rainfall)?	☐	☐
b) Attach weekly inspection forms (BMP and stormwater forms)?	☐	☐
c) Note any correction of defects below?	☐	☐
d) Weekly stormwater form?	☐	☐

Comments: BMPS are in working Condition, no Damage as of yet or Discharge

Dust maintenance and monitoring: N/A
No Dust Control Needed for this Day.

(note if dust suppression is applied)

Marie Cloud
Name / Signature

8/3/16
Date

CBMPP INSPECTION FIELD REPORT LOG

Contractor Name: Taylor Corp
Site Name: OU-3 Remedial Action Specific Area: Northside Curb
Site Location (City, County, State): Anniston, Calhoun County, Alabama

Date: 8/3/16

Weather Conditions: Temp: Min 73° Max 90°
Description (Sunny, Cloudy, Overcast, etc) Cloudy
Precipitation: 0.00 Inches

Work Performed Today (Indicate location and description of work performed and note any safety issues or deviations from the H&S plan):

Northside curb still being blended for one solid facial front. Projected end time could be 8/6/16 if everything goes right.

BMP maintenance and inspection:	Yes	No
a) Inspection of engineering controls performed (ea. week and after rainfall)?	☑	☐
b) Attach weekly inspection forms (BMP and stormwater forms)?	☑	☐
c) Note any correction of defects below?	☑	☐
d) Weekly stormwater form?	☑	☐

Comments: BMPs are in same condition after the 0.94 in rainfall. No dirty discharge that is noticeable or damage to existing BMP.

Dust maintenance and monitoring: N/A

No water source needed for dust control on this date.

(note if dust suppression is applied)

Mike Lilio / [signature]
Name / Signature

8/4/16
Date

CBMPP INSPECTION FIELD REPORT LOG

Contractor Name: Taylor Corp
Site Name: OU-3 Remedial Action Specific Area: Northside Road
Site Location (City, County, State): Anniston, Calhoun County, Alabama

Date: 8/4/16

Weather Conditions: Temp: Min 74° Max 96°
Description (Sunny, Cloudy, Overcast, etc) OVERCAST
Precipitation: 4 Inches

Work Performed Today (Indicate location and description of work performed and note any safety issues or deviations from the H&S plan):

Northside Road being worked along the curb to blend ab w/new slab and the face to have a smooth finish

	Yes	No
BMP maintenance and inspection:		
a) Inspection of engineering controls performed (ea. week and after rainfall)?	☑	☐
b) Attach weekly inspection forms (BMP and stormwater forms)?	☑	☐
c) Note any correction of defects below?	☑	☐
d) Weekly stormwater form?	☑	☐

Comments: BMPs are ok for now, only concern is by the new gate on Northside Rd. Will backfill more and reinforce for upcoming rain events

Dust maintenance and monitoring: N/A

None used for dust control

(note if dust suppression is applied)

Name/ Signature

8/5/16
Date

CBMPP INSPECTION FIELD REPORT LOG

Contractor Name: Tetra Tech
Site Name: OU-3 Remedial Action Specific Area: Northside RA
Site Location (City, County, State): Anniston, Calhoun County, Alabama

Date: 8/5/16

Weather Conditions: Temp: Min _____ Max _____
Description (Sunny, Cloudy, Overcast, etc) _____
Precipitation: _____ Inches

Work Performed Today (Indicate location and description of work performed and note any safety issues or deviations from the H&S plan):

Northside Road curb continues to blend o/o slab w/new and have a finished look to the face of it.

BMP maintenance and inspection:	Yes	No
a) Inspection of engineering controls performed (ea. week and after rainfall)?	☑	☐
b) Attach weekly inspection forms (BMP and stormwater forms)?	☑	☐
c) Note any correction of defects below?	☑	☐
d) Weekly stormwater form?	☑	☐

Comments: BMPs by northside Gate are having mud build up on the inside of the Gate, Road BMPs are fine. New supplies will be ordered for upcoming Rain events, some could possibly be Recordable.

Dust maintenance and monitoring: N/A

No water source used for dust control, TC is not on any of those areas.

(note if dust suppression is applied)

Mike Lillo
Name / Signature

8/6/16
Date

CBMPP INSPECTION FIELD REPORT LOG

Contractor Name: Taylor Corp
Site Name: OU-3 Remedial Action Specific Area: BMP Inspection / N-side road
Site Location (City, County, State): Anniston, Calhoun County, Alabama

Date: 8/6/16 8/6/16 J.T

Weather Conditions: Temp: Min 73° Max 95°
Description (Sunny, Cloudy, Overcast, etc) overcast
Precipitation: 0.01 Inches

Work Performed Today (Indicate location and description of work performed and note any safety issues or deviations from the H&S plan):

BMP Inspection
Northside curb work has been completed as of 8/6/16

BMP maintenance and inspection:	Yes	No
a) Inspection of engineering controls performed (ea. week and after rainfall)?	☐	☐
b) Attach weekly inspection forms (BMP and stormwater forms)?	☐	☐
c) Note any correction of defects below?	☐	☐
d) Weekly stormwater form?	☐	☐

Comments: Some Damage to BMP, Replaced and Straightened with Extra Sandbags etc.

Dust maintenance and monitoring: NP

None Used

(note if dust suppression is applied)

Name / Signature

~~7/7/16~~ 8/6/16 J.T
Date

STORMWATER INSPECITON AND MAINTENANCE REPORT FORM

Site Name: Anniston PCB Site, OU-3 Remedial Action Cover Systems

Site Location: Anniston, Calhoun County, Alabama

NPDES Permit Number: Not Applicable

Weekly Rainfall Summary:

Day:	Sun	Mon	Tues	Wed	Thurs	Fri	Sat
Date:	8/7/16	8/8/16	8/9/16	8/10/16	8/11/16	8/12/16	8/13/16
Rainfall:	Ø	Ø	0.31	0.05	0.01	Ø	0.03

Sampling Information:

- **Sample Type:**
- **Location:**
- **Analysis:**

N/A

Inspection Results:

- **Deficiencies or Required Maintenance:** NONE
- **Planned Corrective Action:**
- **Corrective Action Schedule:**
- **Other Comments:** NEED RAIN!!!

Signature

8/15/16

Date

CBMPP INSPECTION FIELD REPORT LOG

Contractor Name: Taylor Corp
Site Name: OU-3 Remedial Action Specific Area: BMP Inspection
Site Location (City, County, State): Anniston, Calhoun County, Alabama

Date: 8/7/16

Weather Conditions: Temp: Min 73° Max 96°
Description (Sunny, Cloudy, Overcast, etc) Overcast
Precipitation: 0.00 Inches

Work Performed Today (Indicate location and description of work performed and note any safety issues or deviations from the H&S plan):

BMP Inspection

BMP maintenance and inspection:	Yes	No
a) Inspection of engineering controls performed (ea. week and after rainfall)?	☑	☐
b) Attach weekly inspection forms (BMP and stormwater forms)?	☑	☐
c) Note any correction of defects below?	☑	☐
d) Weekly stormwater form?	☑	☐

Comments: BMPs are in good shape, no discharge or damage.

Dust maintenance and monitoring: n/a

None used

(note if dust suppression is applied)

Name / Signature

8/8/16
Date

CBMPP INSPECTION FIELD REPORT LOG

Contractor Name: Taylor Corp
Site Name: OU-3 Remedial Action Specific Area: BMP Inspection
Site Location (City, County, State): Anniston, Calhoun County, Alabama

Date: 8/8/16

Weather Conditions: Temp: Min 76° Max 89°
Description (Sunny, Cloudy, Overcast, etc) Cloudy
Precipitation: 0.00 Inches

Work Performed Today (Indicate location and description of work performed and note any safety issues or deviations from the H&S plan):

BMP Inspection

BMP maintenance and inspection:	Yes	No
a) Inspection of engineering controls performed (ea. week and after rainfall)?	☑	☐
b) Attach weekly inspection forms (BMP and stormwater forms)?	☑	☐
c) Note any correction of defects below?	☑	☐
d) Weekly stormwater form?	☑	☐

Comments: BMPs by Northside Gate have two more sandbags put in place for upcoming Rain.

Dust maintenance and monitoring: N/A

NONE USED

(note if dust suppression is applied)

Name / Signature

8/9/16
Date

CBMPP INSPECTION FIELD REPORT LOG

Contractor Name: Taylor Corp
Site Name: OU-3 Remedial Action Specific Area: BMP Inspection
Site Location (City, County, State): Anniston, Calhoun County, Alabama

Date: 8/9/16

Weather Conditions: Temp: Min 76° Max 89°
Description (Sunny, Cloudy, Overcast, etc) Overcast
Precipitation: 0.81 Inches

Work Performed Today (Indicate location and description of work performed and note any safety issues or deviations from the H&S plan):

BMP Inspection

	Yes	No
BMP maintenance and inspection:		
a) Inspection of engineering controls performed (ea. week and after rainfall)?	☑	☐
b) Attach weekly inspection forms (BMP and stormwater forms)?	☑	☐
c) Note any correction of defects below?	☑	☐
d) Weekly stormwater form?	☑	☐

Comments: BMPs are in Good Shape, No Damage or Discharge.

Dust maintenance and monitoring: N/A

None used

(note if dust suppression is applied)

Mike Lobo / [signature]
Name / Signature

8/10/16
Date

CBMPP INSPECTION FIELD REPORT LOG

Contractor Name: Taylor Corp
Site Name: OU-3 Remedial Action Specific Area: BMP Inspection
Site Location (City, County, State): Anniston, Calhoun County, Alabama

Date: 8/10/16

Weather Conditions: Temp: Min 75° Max 86°
Description (Sunny, Cloudy, Overcast, etc) Cloudy
Precipitation: 0.05 Inches

Work Performed Today (Indicate location and description of work performed and note any safety issues or deviations from the H&S plan):

Inspect BMPs

BMP maintenance and inspection:	Yes	No
a) Inspection of engineering controls performed (ea. week and after rainfall)?	☑	☐
b) Attach weekly inspection forms (BMP and stormwater forms)?	☑	☐
c) Note any correction of defects below?	☑	☐
d) Weekly stormwater form?	☑	☐

Comments:

Dust maintenance and monitoring: N/A

None used

(note if dust suppression is applied)

Mike Lilo / [signature]
Name / Signature

8/11/16
Date

CBMPP INSPECTION FIELD REPORT LOG

Contractor Name: Taylor Corp
Site Name: OU-3 Remedial Action Specific Area: BMP Inspection, AREA A
Site Location (City, County, State): Anniston, Calhoun County, Alabama

Date: 8/11/16

Weather Conditions: Temp: Min 75° Max 89°
Description (Sunny, Cloudy, Overcast, etc) Cloudy
Precipitation: 0.01 Inches

Work Performed Today (Indicate location and description of work performed and note any safety issues or deviations from the H&S plan):

BMP inspection
Need cat around vault and along fence with rock where bushes can't reach (AREA A)

	Yes	No
BMP maintenance and inspection:		
a) Inspection of engineering controls performed (ea. week and after rainfall)?	☑	☐
b) Attach weekly inspection forms (BMP and stormwater forms)?	☑	☐
c) Note any correction of defects below?	☑	☐
d) Weekly stormwater form?	☑	☐

Comments: BMPs are ok, No Damage or Discharge

Dust maintenance and monitoring: N/A

None Needed

(note if dust suppression is applied)

Mike Lilo
Name / Signature

8/12/16
Date

CBMPP INSPECTION FIELD REPORT LOG

Contractor Name: Taylor Corp
Site Name: OU-3 Remedial Action Specific Area: BMP inspection, Area A, PCB
Site Location (City, County, State): Anniston, Calhoun County, Alabama

Date: 8/12/16

Weather Conditions: Temp: Min _____ Max _____
Description (Sunny, Cloudy, Overcast, etc) _____
Precipitation: _____ Inches

Work Performed Today (Indicate location and description of work performed and note any safety issues or deviations from the H&S plan):

Inspect BMP
Continue to weed eat around animal shield
Grassworks came and sprayed for many weeds in PCB cell site

	Yes	No
BMP maintenance and inspection:		
a) Inspection of engineering controls performed (ea. week and after rainfall)?	☑	☐
b) Attach weekly inspection forms (BMP and stormwater forms)?	☑	☐
c) Note any correction of defects below?	☑	☐
d) Weekly stormwater form?	☑	☐

Comments: No damage or discharge, also drove through Borrow, and PCB to check on grass growth and PCB silt fence is still in place.

Dust maintenance and monitoring: NA

None needed

(note if dust suppression is applied)

Name/Signature

8/13/16
Date

CBMPP INSPECTION FIELD REPORT LOG

Contractor Name: Taylor Corp
Site Name: OU-3 Remedial Action
Specific Area: AREA A, BMP Inspection
Site Location (City, County, State): Anniston, Calhoun County, Alabama

Date: 8/13/16

Weather Conditions: Temp: Min 71° Max 89°
Description (Sunny, Cloudy, Overcast, etc) Cloudy / Sunny
Precipitation: 0.03 Inches

Work Performed Today (Indicate location and description of work performed and note any safety issues or deviations from the H&S plan):

AREA A - Continued to knock down tall grass/weeds around armor shield.
Inspect BMP

BMP maintenance and inspection:	Yes	No
a) Inspection of engineering controls performed (ea. week and after rainfall)?	☐	☐
b) Attach weekly inspection forms (BMP and stormwater forms)?	☐	☐
c) Note any correction of defects below?	☐	☐
d) Weekly stormwater form?	☐	☐

Comments: BMPs are in good condition still, no damage or discharge due to no rain.

Dust maintenance and monitoring: N/A

None needed

(note if dust suppression is applied)

Mike Lillo / [signature]
Name / Signature

8/14/16
Date

STORMWATER INSPECITON AND MAINTENANCE REPORT FORM

Site Name: Anniston PCB Site, OU-3 Remedial Action Cover Systems

Site Location: Anniston, Calhoun County, Alabama

NPDES Permit Number: Not Applicable

Weekly Rainfall Summary:

Day:	Sun	Mon	Tues	Wed	Thurs	Fri	Sat
Date:	8/14/16	8/15/16	8/16/16	8/17/16	8/18/16	8/19/16	8/20/16
Rainfall:	Ø	Ø	0.01	0.01	0.04	0.10	0.05

Sampling Information:

- **Sample Type:**
- **Location:**
- **Analysis:**

NA

Inspection Results:

- **Deficiencies or Required Maintenance:** BMPs WERE destroyed on Northside Road + Gate Due to Heavy Equipment not coming through Front Guarded Gate, therefore BMPs overrun by Machinery, and Collapsed
- **Planned Corrective Action:** Order New Wattles, we have sandbags on site plus Hay Bales on site.
- **Corrective Action Schedule:** 8/19/16 Will have them back in place for weekend
- **Other Comments:**

Signature

8/22/16
Date

CBMPP INSPECTION FIELD REPORT LOG

Contractor Name: Taylor Corp
Site Name: OU-3 Remedial Action Specific Area: AREA A, BMP Inspection
Site Location (City, County, State): Anniston, Calhoun County, Alabama

Date: 8/14/16

Weather Conditions: Temp: Min 71° Max 92°
Description (Sunny, Cloudy, Overcast, etc) Cloudy/Sunny
Precipitation: 0.00 Inches

Work Performed Today (Indicate location and description of work performed and note any safety issues or deviations from the H&S plan):

AREA A - Continued Weed Eating
Inspected BMP

BMP maintenance and inspection:	Yes	No
a) Inspection of engineering controls performed (ea. week and after rainfall)?	☑	☐
b) Attach weekly inspection forms (BMP and stormwater forms)?	☑	☐
c) Note any correction of defects below?	☑	☐
d) Weekly stormwater form?	☑	☐

Comments: BMP Inspected, No Damage or Discharge.

Dust maintenance and monitoring: N/A
None Needed
(note if dust suppression is applied)

Name/Signature

8/15/16
Date

CBMPP INSPECTION FIELD REPORT LOG

Contractor Name: Taylor Corp
Site Name: OU-3 Remedial Action Specific Area: AREA A, BMP Inspection
Site Location (City, County, State): Anniston, Calhoun County, Alabama

Date: 8/15/16

Weather Conditions: Temp: Min 71° Max 92°
Description (Sunny, Cloudy, Overcast, etc.) Cloudy
Precipitation: 0.00 Inches

Work Performed Today (Indicate location and description of work performed and note any safety issues or deviations from the H&S plan):

AREA A - Continued WEED EATING, AND TURN SPRINKLERS ON + Will Continue to move them periodically through the day.

BMP Inspection

	Yes	No
BMP maintenance and inspection:		
a) Inspection of engineering controls performed (ea. week and after rainfall)?	☑	☐
b) Attach weekly inspection forms (BMP and stormwater forms)?	☑	☐
c) Note any correction of defects below?	☑	☐
d) Weekly stormwater form?	☑	☐

Comments: BMPs ARE IN GOOD SHAPE, NO DAMAGE OR DISCHARGE.

Dust maintenance and monitoring: n/a

NONE USED

(note if dust suppression is applied)

MILE LIVO / [signature]
Name / Signature

8/15/16
Date

CBMPP INSPECTION FIELD REPORT LOG

Contractor Name: Taylor Corp
Site Name: OU-3 Remedial Action
Specific Area: AREA A, BMP Inspection
Site Location (City, County, State): Anniston, Calhoun County, Alabama

Date: 8/16/16

Weather Conditions: Temp: Min 72° Max 95°
Description (Sunny, Cloudy, Overcast, etc) Cloudy/Sunny
Precipitation: 0.01 Inches

Work Performed Today (Indicate location and description of work performed and note any safety issues or deviations from the H&S plan):

AREA A - Continued to move sprinklers to hit dirt patches
BMP Inspection

BMP maintenance and inspection:	Yes	No
a) Inspection of engineering controls performed (ea. week and after rainfall)?	☑	☐
b) Attach weekly inspection forms (BMP and stormwater forms)?	☑	☐
c) Note any correction of defects below?	☑	☐
d) Weekly stormwater form?	☑	☐

Comments: BMPs are in working order, no damage or discharge.

Dust maintenance and monitoring: N/A
NONE NEEDED

(note if dust suppression is applied)

MILE LILLO / [signature]
Name / Signature

8/17/16
Date

CBMPP INSPECTION FIELD REPORT LOG

Contractor Name: Taylor Corp
Site Name: OU-3 Remedial Action
Specific Area: AREA A, BMP inspection, PCB.
Site Location (City, County, State): Anniston, Calhoun County, Alabama Borrow Pit

Date: 8/17/16

Weather Conditions: Temp: Min 72 Max 92°
Description (Sunny, Cloudy, Overcast, etc) SUNNY
Precipitation: 0.01 Inches

Work Performed Today (Indicate location and description of work performed and note any safety issues or deviations from the H&S plan):

AREA A - Will pull back soil to install slab, also weed eat armor shield.
GRASSWORKS CAME AND RESPRAYED AREA A, PCB, BORROW AREAS
BMP INSPECTION

BMP maintenance and inspection:	Yes	No
a) Inspection of engineering controls performed (ea. week and after rainfall)?	☑	☐
b) Attach weekly inspection forms (BMP and stormwater forms)?	☑	☐
c) Note any correction of defects below?	☑	☐
d) Weekly stormwater form?	☑	☐

Comments: BMP by northside Gate need repairs, I have new wadnes coming to replace torn ones, but different system needs to be put in place, no access up that road or through the Gate.

Dust maintenance and monitoring: Josh has data/or monitors to pull data from.
Water as needed

(note if dust suppression is applied)

Mike Lilo / [signature]
Name / Signature

8/18/16
Date

CBMPP INSPECTION FIELD REPORT LOG

Contractor Name: Taylor Corp
Site Name: OU-3 Remedial Action Specific Area: AREA A, BMP Inspection
Site Location (City, County, State): Anniston, Calhoun County, Alabama

Date: 8/18/16

Weather Conditions: Temp: Min 72 Max 94
Description (Sunny, Cloudy, Overcast, etc) Cloudy / Sunny
Precipitation: 0.01 Inches

Work Performed Today (Indicate location and description of work performed and note any safety issues or deviations from the H&S plan):

AREA A - Pull back soil for curb installment, pull back covers
HOT WORK PERMIT NEEDED
BMP Inspection

BMP maintenance and inspection:	Yes	No
a) Inspection of engineering controls performed (ea. week and after rainfall)?	☑	☐
b) Attach weekly inspection forms (BMP and stormwater forms)?	☑	☐
c) Note any correction of defects below?	☑	☐
d) Weekly stormwater form?	☑	☐

Comments: BMPs by NORTHSIDE GATE AND SIDE ROAD HAVE BEEN REPAIRED WITH TRIPLE WASHES AT GATE AND SINGLE ON ROADSIDE.

Dust maintenance and monitoring: JOSH DOWNLOADS DATA

NONE NEEDED

(note if dust suppression is applied)

Name / Signature

8/19/16
Date

CBMPP INSPECTION FIELD REPORT LOG

Contractor Name: Taylor Corp
Site Name: OU-3 Remedial Action Specific Area: Area A, BMP Inspection
Site Location (City, County, State): Anniston, Calhoun County, Alabama

Date: 8/19/16

Weather Conditions: Temp: Min 72° Max 90°
Description (Sunny, Cloudy, Overcast, etc) Cloudy
Precipitation: 0.10 Inches

Work Performed Today (Indicate location and description of work performed and note any safety issues or deviations from the H&S plan):

Area A - Hot work permit obtained to start cutting Asphalt and remove asphalt and 1 foot of sub dirt deemed hot, advised to utilize Booties for shoes and Gloves for personnel on ground. Machines also have been through DECON process.

	Yes	No
BMP maintenance and inspection:		
a) Inspection of engineering controls performed (ea. week and after rainfall)?	☐	☐
b) Attach weekly inspection forms (BMP and stormwater forms)?	☐	☐
c) Note any correction of defects below?	☐	☐
d) Weekly stormwater form?	☐	☐

Comments: BMPs in Good Condition Limited Rain, No Damage or Discharge.

Dust maintenance and monitoring: ✓ Josh has Data Downloaded

None needed

(note if dust suppression is applied)

Mike Lilly
Name / Signature

8/20/16
Date

CBMPP INSPECTION FIELD REPORT LOG

Contractor Name: TAYLOR Corp
Site Name: OU-3 Remedial Action
Specific Area: BMP Inspection, Area A
Site Location (City, County, State): Anniston, Calhoun County, Alabama

Date: 8/20/16

Weather Conditions: Temp: Min 73 Max 90
Description (Sunny, Cloudy, Overcast, etc) Cloudy
Precipitation: 0.05 Inches

Work Performed Today (Indicate location and description of work performed and note any safety issues or deviations from the H&S plan):

BMPs Inspected

BMP maintenance and inspection:	Yes	No
a) Inspection of engineering controls performed (ea. week and after rainfall)?	☑	☐
b) Attach weekly inspection forms (BMP and stormwater forms)?	☑	☐
c) Note any correction of defects below?	☑	☐
d) Weekly stormwater form?	☑	☐

Comments: BMPS IN GOOD CONDITION, but better solution if NEEDING ACCESS to NORTHSIDE GATE IN + OUT. NO DAMAGE

Dust maintenance and monitoring: Josh

NONE NEEDED

(note if dust suppression is applied)

[signature]
Name / Signature

8/21/16
Date

STORMWATER INSPECITON AND MAINTENANCE REPORT FORM

Site Name: Anniston PCB Site, OU-3 Remedial Action Cover Systems

Site Location: Anniston, Calhoun County, Alabama

NPDES Permit Number: Not Applicable

Weekly Rainfall Summary:

Day:	Sun	Mon	Tues	Wed	Thurs	Fri	Sat
Date:	8/21/16	8/22/16	8/23/16	8/24/16	8/25/16	8/26/16	8/27/16
Rainfall:	T	0	0	0	0	0	0

Sampling Information:

- **Sample Type:**
- **Location:**
- **Analysis:**

N/A

Inspection Results:

- **Deficiencies or Required Maintenance:** Wattles in some areas are worn down, some are damaged
- **Planned Corrective Action:** Replace Wattles and Reinforce with Sandbags
- **Corrective Action Schedule:** Replaced all week where there were deficiencies
- **Other Comments:**

Signature

8/29/16

Date

CBMPP INSPECTION FIELD REPORT LOG

Contractor Name: Taylor Corp
Site Name: OU-3 Remedial Action Specific Area: BMP Inspection
Site Location (City, County, State): Anniston, Calhoun County, Alabama

Date: 8/21/16 **Weather Conditions:** Temp: Min 72° Max 91°
Description (Sunny, Cloudy, Overcast, etc) Cloud
Precipitation: T Inches

Work Performed Today (Indicate location and description of work performed and note any safety issues or deviations from the H&S plan):

NO ONE ON SITE

	Yes	No
BMP maintenance and inspection:		
a) Inspection of engineering controls performed (ea. week and after rainfall)?	☐	☐
b) Attach weekly inspection forms (BMP and stormwater forms)?	☐	☐
c) Note any correction of defects below?	☐	☐
d) Weekly stormwater form?	☐	☐

Comments:

Dust maintenance and monitoring:

(note if dust suppression is applied)

Name / Signature

8/22/16
Date

CBMPP INSPECTION FIELD REPORT LOG

Contractor Name: Taylor Corp
Site Name: OU-3 Remedial Action
Specific Area: AREA A, BMP Inspection
Site Location (City, County, State): Anniston, Calhoun County, Alabama

Date: 8/22/16

Weather Conditions: Temp: Min 70° Max 88°
Description (Sunny, Cloudy, Overcast, etc) Cloudy
Precipitation: Ø Inches

Work Performed Today (Indicate location and description of work performed and note any safety issues or deviations from the H&S plan):

AREA A - Robbie Brown formed curb for concrete pour
Tyler crew continued to break up remainder of asphalt and
other miscellaneous punch list items

BMP maintenance and inspection:	Yes	No
a) Inspection of engineering controls performed (ea. week and after rainfall)?	☑	☐
b) Attach weekly inspection forms (BMP and stormwater forms)?	☑	☐
c) Note any correction of defects below?	☑	☐
d) Weekly stormwater form?	☑	☐

Comments: BMPS were damaged due to machines but needed to be replaced due to wear + tear, and mud build up around northside gate that will continue to happen until vegetation slows process down

Dust maintenance and monitoring: Jose Has

None needed

(note if dust suppression is applied)

Mike Lilo / [signature]
Name / Signature

8/23/16
Date

CBMPP INSPECTION FIELD REPORT LOG

Contractor Name: Taylor Corp
Site Name: OU-3 Remedial Action Specific Area: Area A, BMP Inspection
Site Location (City, County, State): Anniston, Calhoun County, Alabama

Date: 8/23/16

Weather Conditions: Temp: Min 70 Max 90
Description (Sunny, Cloudy, Overcast, etc) Cloudy
Precipitation: Ø Inches

Work Performed Today (Indicate location and description of work performed and note any safety issues or deviations from the H&S plan):

Area A - Continued to pull soil back and remove asphalt + soil underneath for Robbie Brown to prep and pour. Forms were being built. Filler + crew continued there work until finished. Sprinklers were used until concrete personnel needed to use water.

BMP maintenance and inspection:	Yes	No
a) Inspection of engineering controls performed (ea. week and after rainfall)?	☑	☐
b) Attach weekly inspection forms (BMP and stormwater forms)?	☑	☐
c) Note any correction of defects below?	☑	☐
d) Weekly stormwater form?	☑	☐

Comments: BMPs were put back in necessary areas to provide best clean discharge prevention practices, but need a solution if access needs to be through northside gate.

Dust maintenance and monitoring: Just downloads data

None needed

(note if dust suppression is applied)

Mike Lohn / [signature]
Name / Signature

8/24/16
Date

CBMPP INSPECTION FIELD REPORT LOG

Contractor Name: Taylor Corp
Site Name: OU-3 Remedial Action
Specific Area: AREA A, BMP Inspection, Across 202
Site Location (City, County, State): Anniston, Calhoun County, Alabama

Date: 8/24/16

Weather Conditions: Temp: Min 74° Max 94°
Description (Sunny, Cloudy, Overcast, etc) OVERCAST
Precipitation: Ø Inches

Work Performed Today (Indicate location and description of work performed and note any safety issues or deviations from the H&S plan):

AREA A - SAME AREA being worked to completion, still HAVE to build FORMS FOR North side CURB
I HAD QCI COURSE
Work WAS being DONE IN the Ditch ACROSS Plant on 202 Ditch AREA BY Robbie Brown

BMP maintenance and inspection:	Yes	No
a) Inspection of engineering controls performed (ea. week and after rainfall)?	☑	☐
b) Attach weekly inspection forms (BMP and stormwater forms)?	☑	☐
c) Note any correction of defects below?	☑	☐
d) Weekly stormwater form?	☑	☐

Comments: BMPS ARE IN place NO DISCHARGE because no Rain EVENT, Along Clydesdale Silt FENCE + WATTLES ARE probably going to NEED Replacement due to WEAR + TEAR on some, I HAVE WATTLES ONSITE

Dust maintenance and monitoring: Josh Has but I didn't put any out because I was IN Birmingham FOR COURSE

NONE NEEDED

(note if dust suppression is applied)

Mike Lee [signature]
Name / Signature

8/25/16
Date

CBMPP INSPECTION FIELD REPORT LOG

Contractor Name: Taylor Corp
Site Name: OU-3 Remedial Action Specific Area: Area A, BMP Inspection, Concrete pour
Site Location (City, County, State): Anniston, Calhoun County, Alabama

Date: 8/25/16

Weather Conditions: Temp: Min 75° Max 95
Description (Sunny, Cloudy, Overcast, etc) Sunny
Precipitation: 0.00 Inches

Work Performed Today (Indicate location and description of work performed and note any safety issues or deviations from the H&S plan):

Area A - Small Items being worked on by Taylor Corp, Brown Concrete working on Sidewalk

	Yes	No
BMP maintenance and inspection:		
a) Inspection of engineering controls performed (ea. week and after rainfall)?	☑	☐
b) Attach weekly inspection forms (BMP and stormwater forms)?	☑	☐
c) Note any correction of defects below?	☑	☐
d) Weekly stormwater form?	☑	☐

Comments: BMPs have new Wattles in place, some are in of Replacement due to Wear & Tear on them, Replacing as needed

Dust maintenance and monitoring: NONE

Water Source used as needed.

(note if dust suppression is applied)

Mike Lino / [signature]
Name / Signature

8/26/16
Date

CBMPP INSPECTION FIELD REPORT LOG

Contractor Name: Taylor Corp
Site Name: OU-3 Remedial Action
Specific Area: AREA A, BMP
Site Location (City, County, State): Anniston, Calhoun County, Alabama

Date: 8/26/16

Weather Conditions: Temp: Min 74 Max 95
Description (Sunny, Cloudy, Overcast, etc) Cloudy
Precipitation: 0.00 Inches

Work Performed Today (Indicate location and description of work performed and note any safety issues or deviations from the H&S plan):

AREA A - NEW SLAB WAS POURED, HOT WORK PERMIT FOR ASPHALT CUTTING.
PENHAN ALSO CUT NEW CONCRETE SLAB

BMP maintenance and inspection:	Yes	No
a) Inspection of engineering controls performed (ea. week and after rainfall)?	☑	☐
b) Attach weekly inspection forms (BMP and stormwater forms)?	☑	☐
c) Note any correction of defects below?	☑	☐
d) Weekly stormwater form?	☑	☐

Comments: BMPS, NO DAMAGE OR DISCHARGE.

Dust maintenance and monitoring: NONE
WATER SOURCE USED AS NEEDED

(note if dust suppression is applied)

[signature]
Name / Signature

8/27/16
Date

CBMPP INSPECTION FIELD REPORT LOG

Contractor Name: Taylor Corp
Site Name: OU-3 Remedial Action Specific Area: AREA A, BMP
Site Location (City, County, State): Anniston, Calhoun County, Alabama

Date: 8/27/16 **Weather Conditions:** Temp: Min 74° Max 95°
Description (Sunny, Cloudy, Overcast, etc) SUNNY
Precipitation: 0.00 Inches

Work Performed Today (Indicate location and description of work performed and note any safety issues or deviations from the H&S plan):

WATERED AREA A DUE PATCHES THAT HAVE BEEN RESEEDED ADDED NEW WATTLES to NORTH SIDE GATE AND ALONG CURB

	Yes	No
BMP maintenance and inspection:		
a) Inspection of engineering controls performed (ea. week and after rainfall)?	☑	☐
b) Attach weekly inspection forms (BMP and stormwater forms)?	☑	☐
c) Note any correction of defects below?	☑	☐
d) Weekly stormwater form?	☑	☐

Comments: REINSTALLED NEW WATTLES ALONG NORTH SIDE GATE AND BEHIND THE FENCE, PLACED MORE SANDBAGS to PROTECT INTEGRITY OF WATTLES. BMPs ARE WORN IN SOME AREAS, WILL REPLACE AS NEEDED

Dust maintenance and monitoring: NONE

NONE USED FOR DUST SUPPRESSION

(note if dust suppression is applied)

MIKE LILLO / M. Lillo
Name / Signature

8/29/16
Date

STORMWATER INSPECITON AND MAINTENANCE REPORT FORM

Site Name: Anniston PCB Site, OU-3 Remedial Action Cover Systems

Site Location: Anniston, Calhoun County, Alabama

NPDES Permit Number: Not Applicable

Weekly Rainfall Summary:

Day:	Sun	Mon	Tues	Wed	Thurs	Fri	Sat
Date:	8/28	8/29	8/30	8/31	9/1	9/2	9/3
Rainfall:	0.0	0.0	0.0	0.0	0.14	0.33	0.0

Sampling Information:

- **Sample Type:**
- **Location:**
- **Analysis:**

NA

Inspection Results:

- **Deficiencies or Required Maintenance:** NONE NEEDED
- **Planned Corrective Action:**
- **Corrective Action Schedule:**

N/A

- **Other Comments:**

[signature] 9/1/16

Signature **Date**

CBMPP INSPECTION FIELD REPORT LOG

Contractor Name: TAYLOR CORP
Site Name: OU-3 Remedial Action Specific Area: NO WORK
Site Location (City, County, State): Anniston, Calhoun County, Alabama

Date: 8/28/16

Weather Conditions: Temp: Min 72 Max 95
Description (Sunny, Cloudy, Overcast, etc) Sunny
Precipitation: 0.00 Inches

Work Performed Today (Indicate location and description of work performed and note any safety issues or deviations from the H&S plan):

NO WORK PERFORMED

BMP maintenance and inspection:	Yes	No
a) Inspection of engineering controls performed (ea. week and after rainfall)?	☑	☐
b) Attach weekly inspection forms (BMP and stormwater forms)?	☑	☐
c) Note any correction of defects below?	☑	☐
d) Weekly stormwater form?	☑	☐

Comme

Dust maintenance and monitoring: 1.) 2.) 3.) mg/m³

WATER TRUCK AS NEEDED FOR DUST CONTROL

(note if dust suppression is applied)

MIKE [illegible]
Name / Signature

8/29/16
Date

CBMPP INSPECTION FIELD REPORT LOG

Contractor Name: Taylor Corp
Site Name: OU-3 Remedial Action
Specific Area: AREA A, BMP inspection
Site Location (City, County, State): Anniston, Calhoun County, Alabama

Date: 8/29/16

Weather Conditions: Temp: Min 73° Max 94°
Description (Sunny, Cloudy, Overcast, etc) Cloudy
Precipitation: 0.00 Inches

Work Performed Today (Indicate location and description of work performed and note any safety issues or deviations from the H&S plan):

AREA A - Taylor crew poured asphalt back into cut places, cut liner where concrete sidewalk was poured and finished, Brown construction continued building forms getting ready for pour.

	Yes	No
BMP maintenance and inspection:		
a) Inspection of engineering controls performed (ea. week and after rainfall)?	☑	☐
b) Attach weekly inspection forms (BMP and stormwater forms)?	☑	☐
c) Note any correction of defects below?	☑	☐
d) Weekly stormwater form?	☑	☐

Comme BMPs on northside ok, PCB somewhat ok due to high vegetation. Repair as needed and when man power is available.

Dust maintenance and monitoring: 1.) 2.) 3.) mg/m³

WATER TRUCK AS NEEDED FOR DUST CONTROL

(note if dust suppression is applied)

Mike Lee / [signature]
Name / Signature

8/30/16
Date

CBMPP INSPECTION FIELD REPORT LOG

Contractor Name: TAYLOR CORP
Site Name: OU-3 Remedial Action
Specific Area: PIPE TRAY, BMP INSPECTION, AREA A
Site Location (City, County, State): Anniston, Calhoun County, Alabama

Date: 8/30/16

Weather Conditions: Temp: Min 72° Max 93
Description (Sunny, Cloudy, Overcast, etc) SUNNY
Precipitation: 0.00 Inches

Work Performed Today (Indicate location and description of work performed and note any safety issues or deviations from the H&S plan):
PIPE TRAY INSTALL NEW PIPE, did FAB work to make pieces fit. Got HOT AND PROCESS ENTRY PERMITS.

BMP maintenance and inspection:	Yes	No
a) Inspection of engineering controls performed (ea. week and after rainfall)?	☑	☐
b) Attach weekly inspection forms (BMP and stormwater forms)?	☑	☐
c) Note any correction of defects below?	☑	☐
d) Weekly stormwater form?	☑	☐

Comme BMP SO FAR without RAIN can't tell what DAMAGE HAS OR COULD OCCUR IN CERTAIN AREAS.

Dust maintenance and monitoring: 1.) 2.) 3.) mg/m³
WATER TRUCK AS NEEDED FOR DUST CONTROL
(note if dust suppression is applied)

MIKE Lilo / [signature]
Name / Signature

8/31/16
Date

CBMPP INSPECTION FIELD REPORT LOG

Contractor Name: Taylor Corp
Site Name: OU-3 Remedial Action
Specific Area: Pipe Trail, Area A, BMP
Site Location (City, County, State): Anniston, Calhoun County, Alabama

Date: 8/31/16

Weather Conditions: Temp: Min 71° Max 96°
Description (Sunny, Cloudy, Overcast, etc) Sunny
Precipitation: 0.00 Inches

Work Performed Today (Indicate location and description of work performed and note any safety issues or deviations from the H&S plan):
Process entry permit obtained for finishing installation of flange + gaskets. Made cuts in sidewalk also dressed up curb around sidewalk.

BMP maintenance and inspection:	Yes	No
a) Inspection of engineering controls performed (ea. week and after rainfall)?	☑	☐
b) Attach weekly inspection forms (BMP and stormwater forms)?	☑	☐
c) Note any correction of defects below?	☑	☐
d) Weekly stormwater form?	☑	☐

Comme BMPs around north side in area A continuously moved due to equipment or pipes being hauled in + out the day, replaced inserts at the end of the day. During

Dust maintenance and monitoring: 1.) 2.) 3) mg/m³

WATER TRUCK AS NEEDED FOR DUST CONTROL

(note if dust suppression is applied)

Mike Lolo / [signature]
Name / Signature

9/1/16
Date

STORMWATER INSPECITON AND MAINTENANCE REPORT FORM

Site Name: Anniston PCB Site, OU-3 Remedial Action Cover Systems

Site Location: Anniston, Calhoun County, Alabama

NPDES Permit Number: Not Applicable

Weekly Rainfall Summary:

Day:	Sun	Mon	Tues	Wed	Thurs	Fri	Sat
	9/25/16	9/26/16	9/27/16	9/28/16	9/29/16	9/30/16	~~9/31/16~~ 10/1/16
Rainfall:	Ø	Ø	Ø	Ø	Ø	Ø	Ø

Sampling Information: None

- **Sample Type:**
- **Location:**
- **Analysis:**

Inspection Results:

- **Deficiencies or Required Maintenanc**
- **Planned Corrective Action:** NONE
- **Corrective Action Sch**
- **Other Comments:** Silt Fence by PCB Cells will need to come down due to Tall grass already established

Signature

10/01/16
Date

CBMPP INSPECTION FIELD REPORT LOG

Contractor Name: Taylor Corp
Site Name: OU-3 Remedial Action Specific Area: NONE
Site Location (City, County, State): Anniston, Calhoun County, Alabama

Date: 10/01/16

Weather Conditions: Temp: Min 49° Max 81°
Description (Sunny, Cloudy, Overcast, etc) Cloudy
Precipitation: 0 Inches

Work Performed Today (Indicate location and description of work performed and note any safety issues or deviations from the H&S plan):

No Work performed At this Site

	Yes	No
BMP maintenance and inspection:		
a) Inspection of engineering controls performed (ea. week and after rainfall)?	☐	☐
b) Attach weekly inspection forms (BMP and stormwater forms)?	☐	☐
c) Note any correction of defects below?	☐	☐
d) Weekly stormwater form?	☐	☐

Comments: No comment

Dust maintenance and monitoring: N/A

N/A

(note if dust suppression is applied)

Mike Lilio / Mike Lilio
Name / Signature

10/02/16
Date

STORMWATER INSPECITON AND MAINTENANCE REPORT FORM

Site Name: Anniston PCB Site, OU-3 Remedial Action Cover Systems

Site Location: Anniston, Calhoun County, Alabama

NPDES Permit Number: Not Applicable

Weekly Rainfall Summary:

Day:	Sun	Mon	Tues	Wed	Thurs	Fri	Sat
Date:	10/2/16	10/3/16	10/4/16	10/5/16	10/6/16	10/7/16	10/8/16
Rainfall:	Ø	Ø	Ø	Ø	Ø	Ø	Ø

Sampling Information:

- **Sample Type:** N/A
- **Location:**
- **Analysis:**

Inspection Results:

- **Deficiencies or Required Maintenance:** NO Rain to cause any discharge or Damage to BMPs
- **Planned Corrective Action:**
- **Corrective Action Schedule:**
- **Other Comments:**

Signature _____ **Date** 10/9/16

CBMPP INSPECTION FIELD REPORT LOG

Contractor Name: Taylor Corp
Site Name: OU-3 Remedial Action Specific Area: AREA A
Site Location (City, County, State): Anniston, Calhoun County, Alabama

Date: 10/2/16 **Weather Conditions:** Temp: Min _____ Max _____
Description (Sunny, Cloudy, Overcast, etc) _____
Precipitation: _____ Inches

Work Performed Today (Indicate location and description of work performed and note any safety issues or deviations from the H&S plan):

No work

	Yes	No
BMP maintenance and inspection:		
a) Inspection of engineering controls performed (ea. week and after rainfall)?	☐	☐
b) Attach weekly inspection forms (BMP and stormwater forms)?	☐	☐
c) Note any correction of defects below?	☐	☐
d) Weekly stormwater form?	☐	☐

Comments:

Dust maintenance and monitoring:

(note if dust suppression is applied)

Mike Cola
Name / Signature

10/3/16
Date

CBMPP INSPECTION FIELD REPORT LOG

Contractor Name: Taylor Corp
Site Name: OU-3 Remedial Action Specific Area: AREA A
Site Location (City, County, State): Anniston, Calhoun County, Alabama

Date: 10/3/16

Weather Conditions: Temp: Min 55° Max 85°
Description (Sunny, Cloudy, Overcast, etc) SUNNY
Precipitation: 0.00 Inches

Work Performed Today (Indicate location and description of work performed and note any safety issues or deviations from the H&S plan):

AREA-A SOD IN PLACE, CONTINUED TO WATER, DROVE TO AHALLA TO PICK UP PLATE TEMP FROM UNITED RENTALS AND TOOK IT TO RANDY'S CREW AT ANNISTON ARMY DEPOT

BMP maintenance and inspection:	Yes	No
a) Inspection of engineering controls performed (ea. week and after rainfall)?	☑	☐
b) Attach weekly inspection forms (BMP and stormwater forms)?	☑	☐
c) Note any correction of defects below?	☑	☐
d) Weekly stormwater form?	☑	☐

Comments: BMPS - NO SUBSTANTIAL RAIN FOR DISCHARGE OR DAMAGE.

Dust maintenance and monitoring:

NONE USED

(note if dust suppression is applied)

MILE LOW / [signature]
Name / Signature

10/4/16
Date

CBMPP INSPECTION FIELD REPORT LOG

Contractor Name: Taylor Corp
Site Name: OU-3 Remedial Action Specific Area: Area A, Pipe Trail
Site Location (City, County, State): Anniston, Calhoun County, Alabama

Date: 10/4/16 **Weather Conditions:** Temp: Min 61° Max 88°
Description (Sunny, Cloudy, Overcast, etc) Sunny
Precipitation: 0 Inches

Work Performed Today (Indicate location and description of work performed and note any safety issues or deviations from the H&S plan):

Area A water Soo, also north of parking lot, check on crews.

	Yes	No
BMP maintenance and inspection:		
a) Inspection of engineering controls performed (ea. week and after rainfall)?	☑	☐
b) Attach weekly inspection forms (BMP and stormwater forms)?	☑	☐
c) Note any correction of defects below?	☑	☐
d) Weekly stormwater form?	☑	☐

Comments: NO Rain to Damage or Discharge of BMPs

Dust maintenance and monitoring:

NONE USED

(note if dust suppression is applied)

Mike Lilo
Name / Signature

10/5/16
Date

CBMPP INSPECTION FIELD REPORT LOG

Contractor Name: Taylor Corp
Site Name: OU-3 Remedial Action Specific Area: AREA A
Site Location (City, County, State): Anniston, Calhoun County, Alabama

Date: 10/5/16

Weather Conditions: Temp: Min 63° Max 87°
Description (Sunny, Cloudy, Overcast, etc) Sunny
Precipitation: Ø Inches

Work Performed Today (Indicate location and description of work performed and note any safety issues or deviations from the H&S plan):

USED TRIPOD SPRINKLERS to try and grow grass, went to shop to get materials and tailgate

BMP maintenance and inspection:	Yes	No
a) Inspection of engineering controls performed (ea. week and after rainfall)?	☑	☐
b) Attach weekly inspection forms (BMP and stormwater forms)?	☑	☐
c) Note any correction of defects below?	☑	☐
d) Weekly stormwater form?	☑	☐

Comments: NO DISCHARGE OR DAMAGE due to no rain on BMPS

Dust maintenance and monitoring:

NONE USED

(note if dust suppression is applied)

[signature]
Name / Signature

10/6/16
Date

CBMPP INSPECTION FIELD REPORT LOG

Contractor Name: Taylor Corp
Site Name: OU-3 Remedial Action Specific Area: Area A
Site Location (City, County, State): Anniston, Calhoun County, Alabama

Date: 10/7/16 **Weather Conditions:** Temp: Min 60 Max 90
Description (Sunny, Cloudy, Overcast, etc)
Precipitation: 0 Inches

Work Performed Today (Indicate location and description of work performed and note any safety issues or deviations from the H&S plan):

Area A Grasswork Re-Seeded Weed and Hay

	Yes	No
BMP maintenance and inspection:		
a) Inspection of engineering controls performed (ea. week and after rainfall)?	☑	☐
b) Attach weekly inspection forms (BMP and stormwater forms)?	☑	☐
c) Note any correction of defects below?	☑	☐
d) Weekly stormwater form?	☑	☐

Comments: BMPs No Damage or Discharge

Dust maintenance and monitoring:

N/A

(note if dust suppression is applied)

Meg Lilo / [signature]
Name / Signature

10/8/16
Date

CBMPP INSPECTION FIELD REPORT LOG

Contractor Name: Taylor Corp
Site Name: OU-3 Remedial Action Specific Area: Area A
Site Location (City, County, State): Anniston, Calhoun County, Alabama

Date: 10/8/16 **Weather Conditions:** Temp: Min 62° Max 85°
Description (Sunny, Cloudy, Overcast, etc)
Precipitation: 0 Inches

Work Performed Today (Indicate location and description of work performed and note any safety issues or deviations from the H&S plan):

Area A - Set up Roll out sprinkler, piece broke, watered again with Tripod sprinklers

	Yes	No
BMP maintenance and inspection:		
a) Inspection of engineering controls performed (ea. week and after rainfall)?	☑	☐
b) Attach weekly inspection forms (BMP and stormwater forms)?	☑	☐
c) Note any correction of defects below?	☑	☐
d) Weekly stormwater form?	☑	☐

Comments: BMP's in good condition, no Rain to cause discharge or Damage.

Dust maintenance and monitoring:

(note if dust suppression is applied)

Mike Lolley
Name / Signature

10/9/16
Date

STORMWATER INSPECITON AND MAINTENANCE REPORT FORM

Site Name: Anniston PCB Site, OU-3 Remedial Action Cover Systems

Site Location: Anniston, Calhoun County, Alabama

NPDES Permit Number: Not Applicable

Weekly Rainfall Summary:

Day:	Sun	Mon	Tues	Wed	Thurs	Fri	Sat
Date:	10/9/16	10/10/16	10/11/16	10/12/16	10/13/16	10/14/16	10/15/16
Rainfall:	Ø	Ø	Ø	Ø	Ø	Ø	Ø

Sampling Information:

- **Sample Type:** N/A
- **Location:**
- **Analysis:**

Inspection Results:

- **Deficiencies or Required Maintenance:** Drought in place, no discharge for 2wks or damage
- **Planned Corrective Action:**
- **Corrective Action Schedule:**
- **Other Comments:**

Signature

10/17/16
Date

CBMPP INSPECTION FIELD REPORT LOG

Contractor Name: Taylor Corp
Site Name: OU-3 Remedial Action Specific Area: AREA A
Site Location (City, County, State): Anniston, Calhoun County, Alabama

Date: 10/9/16

Weather Conditions: Temp: Min 51° Max 83°
Description (Sunny, Cloudy, Overcast, etc) Sunny
Precipitation: Ø Inches

Work Performed Today (Indicate location and description of work performed and note any safety issues or deviations from the H&S plan):

AREA A Main Focus - water
Sports Complex deliver parts

BMP maintenance and inspection:	Yes	No
a) Inspection of engineering controls performed (ea. week and after rainfall)?	☑	☐
b) Attach weekly inspection forms (BMP and stormwater forms)?	☑	☐
c) Note any correction of defects below?	☑	☐
d) Weekly stormwater form?	☑	☐

Comments: BMPS ARE GOOD, NO Rain FOR DISCHARGE

Dust maintenance and monitoring:

N/A

(note if dust suppression is applied)

MIKE Lilco / [signature]
Name / Signature

10/10/16
Date

CBMPP INSPECTION FIELD REPORT LOG

Contractor Name: Taylor Corp
Site Name: OU-3 Remedial Action Specific Area: AREA A / AREA A
Site Location (City, County, State): Anniston, Calhoun County, Alabama

Date: 10/10/16

Weather Conditions: Temp: Min 50° Max 82°
Description (Sunny, Cloudy, Overcast, etc) Sunny
Precipitation: 0 Inches

Work Performed Today (Indicate location and description of work performed and note any safety issues or deviations from the H&S plan):

AREA A - WATERED / RE SEEDED BALD AREAS
AREA E - ROBBIE BROWN CO. BUILDING TENSION WALL
DRIVE to VILLA RICCA to GET SPRINKLER FIXED

	Yes	No
BMP maintenance and inspection:		
a) Inspection of engineering controls performed (ea. week and after rainfall)?	☑	☐
b) Attach weekly inspection forms (BMP and stormwater forms)?	☑	☐
c) Note any correction of defects below?	☑	☐
d) Weekly stormwater form?	☑	☐

Comments: BMPs - NO RAIN to CAUSE DISCHARGE or DAMAGE

Dust maintenance and monitoring:

N/A

(note if dust suppression is applied)

Name / Signature

10/11/16
Date

CBMPP INSPECTION FIELD REPORT LOG

Contractor Name: Taylor Corp
Site Name: OU-3 Remedial Action
Specific Area: AREA A, AREA E
Site Location (City, County, State): Anniston, Calhoun County, Alabama

Date: 10/11/16

Weather Conditions: Temp: Min 50° Max 80°
Description (Sunny, Cloudy, Overcast, etc) OVERCAST
Precipitation: 0 Inches

Work Performed Today (Indicate location and description of work performed and note any safety issues or deviations from the H&S plan):

AREA A - WATERED BALD AREAS
AREA E - ROBBIE BROWN Co WORKING / PUT TRIPODS IN PLACE FOR SOD
DROVE BACK to VILLA RICCA to pick up ROLLOUT SPRINKLER that got FIXED.

BMP maintenance and inspection:

	Yes	No
a) Inspection of engineering controls performed (ea. week and after rainfall)?	☑	☐
b) Attach weekly inspection forms (BMP and stormwater forms)?	☑	☐
c) Note any correction of defects below?	☑	☐
d) Weekly stormwater form?	☑	☐

Comments: BMPs - NO RAIN to CAUSE DISCHARGE or damage

Dust maintenance and monitoring: N/A
N/A

(note if dust suppression is applied)

MIKE LILLO / [signature]
Name / Signature

10/12/16
Date

BMPP INSPECTION FIELD REPORT LOG

Contractor Name: Taylor Corp
Site Name: OU-3 Remedial Action Specific Area: AREA A, AREA E
Site Location (City, County, State): Anniston, Calhoun County, Alabama

Date: 10/12/16

Weather Conditions: Temp: Min 52° Max 81°
Description (Sunny, Cloudy, Overcast, etc.) Sunny
Precipitation: 0 Inches

Work Performed Today (Indicate location and description of work performed and note any safety issues or deviations from the H&S plan):

AREA A - Continues to water and move accordingly to BMP areas
AREA E - Brown Co continues with Tension wall to get ready to haul dirt to fill

BMP maintenance and inspection:	Yes	No
a) Inspection of engineering controls performed (ea. week and after rainfall)?	☑	☐
b) Attach weekly inspection forms (BMP and stormwater forms)?	☑	☐
c) Note any correction of defects below?	☑	☐
d) Weekly stormwater form?	☑	☐

Comments: BMPs - NO RAIN, NO DISCHARGE, NO DAMAGE

Dust maintenance and monitoring: n/a
N/A

(note if dust suppression is applied)

MIKE LIVAS
Name / Signature

10/13/16
Date

BMPP INSPECTION FIELD REPORT LOG

Contractor Name: Taylor Corp
Site Name: OU-3 Remedial Action Specific Area: Area A, Area E
Site Location (City, County, State): Anniston, Calhoun County, Alabama

Date: 10/13/16

Weather Conditions: Temp: Min 47° Max 86°
Description (Sunny, Cloudy, Overcast, etc) Sunny
Precipitation: 0 Inches

Work Performed Today (Indicate location and description of work performed and note any safety issues or deviations from the H&S plan):

Area A - Continues to water areas w/at grass growing
Area E - Brown Construction still working last area.

	Yes	No
BMP maintenance and inspection:		
a) Inspection of engineering controls performed (ea. week and after rainfall)?	☑	☐
b) Attach weekly inspection forms (BMP and stormwater forms)?	☑	☐
c) Note any correction of defects below?	☑	☐
d) Weekly stormwater form?	☑	☐

Comments: BMPS - Good Condition due to no Rain and NO Discharge or Damage.

Dust maintenance and monitoring: N/A
N/A

(note if dust suppression is applied)

Mike Lowe
Name / Signature

10/14/16
Date

BMPP INSPECTION FIELD REPORT LOG

Contractor Name: Taylor Corp
Site Name: OU-3 Remedial Action Specific Area: Area A, Area E
Site Location (City, County, State): Anniston, Calhoun County, Alabama

Date: 10/14/16

Weather Conditions: Temp: Min 53° Max 87°
Description (Sunny, Cloudy, Overcast, etc) Sunny
Precipitation: 0 Inches

Work Performed Today (Indicate location and description of work performed and note any safety issues or deviations from the H&S plan):

Area A - Mow Focus due to drought in Rain
Area E - Drain Construction

	Yes	No
BMP maintenance and inspection:		
a) Inspection of engineering controls performed (ea. week and after rainfall)?	☑	☐
b) Attach weekly inspection forms (BMP and stormwater forms)?	☑	☐
c) Note any correction of defects below?	☑	☐
d) Weekly stormwater form?	☑	☐

Comments: BMPs, No Rain, No Discharge, No Damage.

Dust maintenance and monitoring: N/A
N/A

(note if dust suppression is applied)

Mike Lilio
Name / Signature

10/15/16
Date

CBMPP INSPECTION FIELD REPORT LOG

Contractor Name: Taylor Corp
Site Name: OU-3 Remedial Action Specific Area: AREA A, AREA E
Site Location (City, County, State): Anniston, Calhoun County, Alabama

Date: 10/15/16

Weather Conditions: Temp: Min 62° Max 84°
Description (Sunny, Cloudy, Overcast, etc) Sunny
Precipitation: 0 Inches

Work Performed Today (Indicate location and description of work performed and note any safety issues or deviations from the H&S plan):

AREA A B&D AREAS Main Focus
AREA E - BROWN Construction Continuing Work

BMP maintenance and inspection:	Yes	No
a) Inspection of engineering controls performed (ea. week and after rainfall)?	☑	☐
b) Attach weekly inspection forms (BMP and stormwater forms)?	☑	☐
c) Note any correction of defects below?	☑	☐
d) Weekly stormwater form?	☑	☐

Comments: NO DAMAGE OR DISCHARGE due to lack of Rain.

Dust maintenance and monitoring: N/A

N/A

(note if dust suppression is applied)

MILE LIVIN
Name / Signature

10/16/16
Date

STORMWATER INSPECITON AND MAINTENANCE REPORT FORM

Site Name: Anniston PCB Site, OU-3 Remedial Action Cover Systems

Site Location: Anniston, Calhoun County, Alabama

NPDES Permit Number: Not Applicable

Weekly Rainfall Summary:

Day:	Sun	Mon	Tues	Wed	Thurs	Fri	Sat
Date:	10/16/16	10/17/16	10/18/16	10/19/16	10/20/16	10/21/16	10/22/16
Rainfall:	Ø	Ø	Ø	Ø	Ø	Ø	Ø

Sampling Information:

- **Sample Type:** N/A
- **Location:**
- **Analysis:**

Inspection Results:

- **Deficiencies or Required Maintenance:** NO RAIN, SEVERE DROUGHT, NO DISCHARGE OR DAMAGE
- **Planned Corrective Action:**
- **Corrective Action Schedule:** NONE
- **Other Comments:** CHECK DAMS REMAIN FROM AREA 5, GRASS ALREADY GROWING WHERE IT WAS BARE.

Signature 10/23/16 **Date**

BMPP INSPECTION FIELD REPORT LOG

Contractor Name: Taylor Corp
Site Name: OU-3 Remedial Action Specific Area: Area A, Area E
Site Location (City, County, State): Anniston, Calhoun County, Alabama

Date: 10/16/16

Weather Conditions: Temp: Min 64 Max 82
Description (Sunny, Cloudy, Overcast, etc) Sunny
Precipitation: 0.00 Inches

Work Performed Today (Indicate location and description of work performed and note any safety issues or deviations from the H&S plan):

No work

	Yes	No
BMP maintenance and inspection:		
a) Inspection of engineering controls performed (ea. week and after rainfall)?	☐	☐
b) Attach weekly inspection forms (BMP and stormwater forms)?	☐	☐
c) Note any correction of defects below?	☐	☐
d) Weekly stormwater form?	☐	☐

Comments:

Dust maintenance and monitoring:

NONE USED

(note if dust suppression is applied)

Name / Signature

10/17/16
Date

BMPP INSPECTION FIELD REPORT LOG

Contractor Name: Taylor Corp
Site Name: OU-3 Remedial Action Specific Area: AREA A, AREA E
Site Location (City, County, State): Anniston, Calhoun County, Alabama

Date: 10/17/16

Weather Conditions: Temp: Min 58° Max 87°
Description (Sunny, Cloudy, Overcast, etc) Sunny
Precipitation: Ø Inches

Work Performed Today (Indicate location and description of work performed and note any safety issues or deviations from the H&S plan):

Continued to establish area A
AREA E - Brown Co. working to build and haul in dirt for tension wall

	Yes	No
BMP maintenance and inspection:		
a) Inspection of engineering controls performed (ea. week and after rainfall)?	✓	
b) Attach weekly inspection forms (BMP and stormwater forms)?	✓	
c) Note any correction of defects below?	✓	
d) Weekly stormwater form?	✓	

Comments: No Rain to produce discharge, no Damage

Dust maintenance and monitoring: N/A

None used

(note if dust suppression is applied)

Mike Lolo / [signature]
Name / Signature

10/18/16
Date

CBMPP INSPECTION FIELD REPORT LOG

Contractor Name: Taylor Corp
Site Name: OU-3 Remedial Action Specific Area: AREA A, AREA E
Site Location (City, County, State): Anniston, Calhoun County, Alabama

Date: 10/18/16

Weather Conditions: Temp: Min 58° Max 89°
Description (Sunny, Cloudy, Overcast, etc) Sunny
Precipitation: 0 Inches

Work Performed Today (Indicate location and description of work performed and note any safety issues or deviations from the H&S plan):

AREA A - Continues to establish growth of grass
AREA E - Robbie Brown Co. still working area

	Yes	No
BMP maintenance and inspection:		
a) Inspection of engineering controls performed (ea. week and after rainfall)?	☑	☐
b) Attach weekly inspection forms (BMP and stormwater forms)?	☑	☐
c) Note any correction of defects below?	☐	☑
d) Weekly stormwater form?	☑	☐

Comments: No discharge, no damage to BMPs
Drought in place

Dust maintenance and monitoring: N/A

None used

(note if dust suppression is applied)

Mark Lillo / [signature]
Name / Signature

10/18/16
Date

CBMPP INSPECTION FIELD REPORT LO

Contractor Name: Taylor Corp
Site Name: OU-3 Remedial Action Specific Area: AREA A, AREA E
Site Location (City, County, State): Anniston, Calhoun County, Alabama

Date: 10/19/16

Weather Conditions: Temp: Min 64° Max 90°
Description (Sunny, Cloudy, Overcast, etc) Sunny
Precipitation: 0 Inches

Work Performed Today (Indicate location and description of work performed and note any safety issues or deviations from the H&S plan):

CHECK DAM REMOVED IN AREA A, SEEDED BARE AREAS AND WATERED.
AREA E - BROWN CO.

	Yes	No
BMP maintenance and inspection:		
a) Inspection of engineering controls performed (ea. week and after rainfall)?	☑	☐
b) Attach weekly inspection forms (BMP and stormwater forms)?	☑	☐
c) Note any correction of defects below?	☑	☐
d) Weekly stormwater form?	☑	☐

Comments: NO RAIN to cause any discharge or damage.

Dust maintenance and monitoring: N/A

NONE USED

(note if dust suppression is applied)

MIKE LILLY / Mike Lilly
Name / Signature

10/20/16
Date

CBMPP INSPECTION FIELD REPORT LO

Contractor Name: Taylor Corp
Site Name: OU-3 Remedial Action Specific Area: AREA A, AREA E
Site Location (City, County, State): Anniston, Calhoun County, Alabama

Date: 10/20/16

Weather Conditions: Temp: Min 61° Max 90°
Description (Sunny, Cloudy, Overcast, etc) Sunny
Precipitation: 0 Inches

Work Performed Today (Indicate location and description of work performed and note any safety issues or deviations from the H&S plan):

PCB Cell - Reseeded Certain Areas
Area A - Continued to Water
Area E - Brown Co. Still Working Area

BMP maintenance and inspection:	Yes	No
a) Inspection of engineering controls performed (ea. week and after rainfall)?	✓	
b) Attach weekly inspection forms (BMP and stormwater forms)?	✓	
c) Note any correction of defects below?	✓	
d) Weekly stormwater form?	✓	

Comments: No discharge or damage, Severe drought in place.

Dust maintenance and monitoring: N/A

None used

(note if dust suppression is applied)

Mike L. Lo[illegible] / [signature]
Name / Signature

10/21/16
Date

CBMPP INSPECTION FIELD REPORT LO

Contractor Name: Taylor Corp
Site Name: OU-3 Remedial Action Specific Area: AREA A, AREA E
Site Location (City, County, State): Anniston, Calhoun County, Alabama

Date: 10/21/16

Weather Conditions: Temp: Min 49° Max 70°
Description (Sunny, Cloudy, Overcast, etc) Cloudy
Precipitation: 0 Inches

Work Performed Today (Indicate location and description of work performed and note any safety issues or deviations from the H&S plan):

AREA A - MOWING, DEBRIS.
CLEANED MOWING TRAILER
AREA E - BROWN CO. STILL WORKING AREA.

	Yes	No
BMP maintenance and inspection:		
a) Inspection of engineering controls performed (ea. week and after rainfall)?	☑	☐
b) Attach weekly inspection forms (BMP and stormwater forms)?	☑	☐
c) Note any correction of defects below?	☑	☐
d) Weekly stormwater form?	☑	☐

Comments: SEVERE DROUGHT, NO DISCHARGE OR DAMAGE TO BMPS.

Dust maintenance and monitoring: N/A.

NONE USED

(note if dust suppression is applied)

MIKE [illegible]
Name / Signature

10/22/16
Date

CBMPP INSPECTION FIELD REPORT LOG

Contractor Name: Taylor Corp
Site Name: OU-3 Remedial Action Specific Area: Area 6
Site Location (City, County, State): Anniston, Calhoun County, Alabama

Date: 10/22/16 **Weather Conditions:** Temp: Min 40° Max 70°
Description (Sunny, Cloudy, Overcast, etc)
Precipitation: _____ Inches

Work Performed Today (Indicate location and description of work performed and note any safety issues or deviations from the H&S plan):

OFF

	Yes	No
BMP maintenance and inspection:		
a) Inspection of engineering controls performed (ea. week and after rainfall)?	☐	☐
b) Attach weekly inspection forms (BMP and stormwater forms)?	☐	☐
c) Note any correction of defects below?	☐	☐
d) Weekly stormwater form?	☐	☐

Comments:

Dust maintenance and monitoring:

(note if dust suppression is applied)

Name / Signature

10/23/16
Date

STORMWATER INSPECITON AND MAINTENANCE REPORT FORM

Site Name: Anniston PCB Site, OU-3 Remedial Action Cover Systems

Site Location: Anniston, Calhoun County, Alabama

NPDES Permit Number: Not Applicable

Weekly Rainfall Summary:

Day:	Sun	Mon	Tues	Wed	Thurs	Fri	Sat
Date:	10/23/16	10/24/16	10/25/16	10/26/16	10/27/16	10/28/16	10/29/16
Rainfall:	Ø	Ø	Ø	Ø	Ø	Ø	Ø

Sampling Information:

- **Sample Type:**
- **Location:**
- **Analysis:**

N/A

Inspection Results:

- **Deficiencies or Required Maintenance:** NONE
- **Planned Corrective Action:**
- **Corrective Action Schedule:**
- **Other Comments:** SEVERE drought in place, Taking longer than expected to establish AREA A.

[signature] 10/30/16

Signature **Date**

CBMPP INSPECTION FIELD REPORT LOG

Contractor Name: Taylor Corp
Site Name: OU-3 Remedial Action Specific Area: Area A
Site Location (City, County, State): Anniston, Calhoun County, Alabama

Date: 10/23/16

Weather Conditions: Temp: Min 38° Max 78°
Description (Sunny, Cloudy, Overcast, etc) Cloudy
Precipitation: 0.00 inches

Work Performed Today (Indicate location and description of work performed and note any safety issues or deviations from the H&S plan):

OFF - NO work Performed

	Yes	No
BMP maintenance and inspection:		
a) Inspection of engineering controls performed (ea. week and after rainfall)?	☐	☐
b) Attach weekly inspection forms (BMP and stormwater forms)?	☐	☐
c) Note any correction of defects below?	☐	☐
d) Weekly stormwater form?	☐	☐

Comments:

Dust maintenance and monitoring: N/A

NONE NEEDED

(note if dust suppression is applied)

Mike Lilly
Name / Signature

10/24/16
Date

CBMPP INSPECTION FIELD REPORT LOG

Contractor Name: Taylor Corp
Site Name: OU-3 Remedial Action Specific Area: AREA A
Site Location (City, County, State): Anniston, Calhoun County, Alabama

Date: 10/24/16

Weather Conditions: Temp: Min 42° Max 84°
Description (Sunny, Cloudy, Overcast, etc) Sunny
Precipitation: 0.00 Inches

Work Performed Today (Indicate location and description of work performed and note any safety issues or deviations from the H&S plan):

Continued to establish growth in AREA A, SEEDED DROUGHT IN PLACE, CLEANED AREA AROUND TRAILER, MADE DELIVERIES AT SPOTS COMPLETED

	Yes	No
BMP maintenance and inspection:		
a) Inspection of engineering controls performed (ea. week and after rainfall)?	☑	☐
b) Attach weekly inspection forms (BMP and stormwater forms)?	☑	☐
c) Note any correction of defects below?	☑	☐
d) Weekly stormwater form?	☑	☐

Comments: NO RAIN TO CAUSE DISCHARGE, NO DAMAGE THAT IVE NOTICED TO BMPs

Dust maintenance and monitoring: N/A

NONE NEEDED

(note if dust suppression is applied)

MIKE LOLLO
Name / Signature

10/25/16
Date

CBMPP INSPECTION FIELD REPORT LOG

Contractor Name: Taylor Corp
Site Name: OU-3 Remedial Action Specific Area: AREA A, Miracle Field
Site Location (City, County, State): Anniston, Calhoun County, Alabama

Date: 10/25/16

Weather Conditions: Temp: Min 44° Max 85°
Description (Sunny, Cloudy, Overcast, etc) SUNNY
Precipitation: Ø Inches

Work Performed Today (Indicate location and description of work performed and note any safety issues or deviations from the H&S plan):

AREA A - Continued to establish growth/RE SEEDED AGAIN IN BARE AREAS
WENT to MIRACLE FIELD to IDENTIFY MATERIALS NEEDED FOR WORK.

BMP maintenance and inspection:	Yes	No
a) Inspection of engineering controls performed (ea. week and after rainfall)?	✓	
b) Attach weekly inspection forms (BMP and stormwater forms)?	✓	
c) Note any correction of defects below?	✓	
d) Weekly stormwater form?	✓	

Comments: NO RAIN, NO discharge, HAVENT CHECKED BMPS DUE to BEING AWAY on this DAY.

Dust maintenance and monitoring: N/A
NONE NEEDED

(note if dust suppression is applied)

MIKE LILLY / [signature]
Name / Signature

10/26/16
Date

CBMPP INSPECTION FIELD REPORT LOG

Contractor Name: Taylor Corp
Site Name: OU-3 Remedial Action Specific Area: AREA A, Miracle Field
Site Location (City, County, State): Anniston, Calhoun County, Alabama

Date: 10/26/16

Weather Conditions: Temp: Min 55° Max 80°
Description (Sunny, Cloudy, Overcast, etc) Sunny
Precipitation: 0 Inches

Work Performed Today (Indicate location and description of work performed and note any safety issues or deviations from the H&S plan):

AREA A - SAME AS OTHER DAYS.
WENT TO MIRACLE FIELD IN OXFORD TO STAKE WATTLES AROUND EXISTING FENCE

	Yes	No
BMP maintenance and inspection:		
a) Inspection of engineering controls performed (ea. week and after rainfall)?	☑	☐
b) Attach weekly inspection forms (BMP and stormwater forms)?	☑	☐
c) Note any correction of defects below?	☑	☐
d) Weekly stormwater form?	☑	☐

Comments: NO RAIN TO CAUSE DISCHARGE, NO DAMAGE TO REMAINDER OF BMPs

Dust maintenance and monitoring: N/A

NONE NEEDED

(note if dust suppression is applied)

NICK LILLO
Name / Signature

10/27/16
Date

CBMPP INSPECTION FIELD REPORT LOG

Contractor Name: Taylor Corp
Site Name: OU-3 Remedial Action Specific Area: Area A
Site Location (City, County, State): Anniston, Calhoun County, Alabama

Date: 10/27/16

Weather Conditions: Temp: Min 68° Max 89°
Description (Sunny, Cloudy, Overcast, etc) Sunny
Precipitation: 0 Inches

Work Performed Today (Indicate location and description of work performed and note any safety issues or deviations from the H&S plan):

Area A - Continuing to Establish growth during this severe drought of 29 days.

	Yes	No
BMP maintenance and inspection:		
a) Inspection of engineering controls performed (ea. week and after rainfall)?	☑	☐
b) Attach weekly inspection forms (BMP and stormwater forms)?	☑	☐
c) Note any correction of defects below?	☑	☐
d) Weekly stormwater form?	☑	☐

Comments: No Rain to cause discharge, No Damage as of yet to BMP's that Remain

Dust maintenance and monitoring: N/A

None Needed

(note if dust suppression is applied)

Mike Lowe
Name / Signature

10/28/16
Date

CBMPP INSPECTION FIELD REPORT LO

Contractor Name: Taylor Corp
Site Name: OU-3 Remedial Action Specific Area: Areas A, Delivery
Site Location (City, County, State): Anniston, Calhoun County, Alabama

Date: 10/28/16

Weather Conditions: Temp: Min 53° Max 87°
Description (Sunny, Cloudy, Overcast, etc) Sunny
Precipitation: 0 Inches

Work Performed Today (Indicate location and description of work performed and note any safety issues or deviations from the H&S plan):

Area A - Established area, still severe drought for this area.
Drive to Moody, AL to Pick up Landscaping Plants for Sports Complex.

	Yes	No
BMP maintenance and inspection:		
a) Inspection of engineering controls performed (ea. week and after rainfall)?	☑	☐
b) Attach weekly inspection forms (BMP and stormwater forms)?	☑	☐
c) Note any correction of defects below?	☑	☐
d) Weekly stormwater form?	☑	☐

Comments: No Rain, no Discharge, no Damage to Remedy BMPs

Dust maintenance and monitoring: N/A

None Used

(note if dust suppression is applied)

Mike Ellis / [signature]
Name / Signature

10/29/16
Date

CBMPP INSPECTION FIELD REPORT LOG

Contractor Name: Taylor Corp
Site Name: OU-3 Remedial Action Specific Area:
Site Location (City, County, State): Anniston, Calhoun County, Alabama

Date: 10/29/16

Weather Conditions: Temp: Min 53 Max 88°
Description (Sunny, Cloudy, Overcast, etc) Sunny
Precipitation: 0 Inches

Work Performed Today (Indicate location and description of work performed and note any safety issues or deviations from the H&S plan):

Did not work, came in Sunday 10/30/16 for half a day due to them Redoing the Parking Lot.

	Yes	No
BMP maintenance and inspection:		
a) Inspection of engineering controls performed (ea. week and after rainfall)?	☐	☐
b) Attach weekly inspection forms (BMP and stormwater forms)?	☐	☐
c) Note any correction of defects below?	☐	☐
d) Weekly stormwater form?	☐	☐

Comments:

Dust maintenance and monitoring:

(note if dust suppression is applied)

Mike Lowe
Name / Signature

10/30/16
Date

STORMWATER INSPECITON AND MAINTENANCE REPORT FORM

Site Name: Anniston PCB Site, OU-3 Remedial Action Cover Systems

Site Location: Anniston, Calhoun County, Alabama

NPDES Permit Number: Not Applicable

Weekly Rainfall Summary:

Day:	Sun	Mon	Tues	Wed	Thurs	Fri	Sat
	10/30/16	10/31/16	11/01/16	11/02/16	11/03/16	11/04/16	11/05/16
Rainfall:	Ø	Ø	Ø	Ø	Ø	Ø	Ø

Sampling Information: None

- **Sample Type:**
- **Location:**
- **Analysis:**

N/A

Inspection Results:

- **Deficiencies or Required Maintenanc**
- **Planned Corrective Action:** SEVERE Drought For the State
- **Corrective Action Sch**
- **Other Comments:**

Signature

11/7/16

Date

CBMPP INSPECTION FIELD REPORT LOG

Contractor Name: Taylor Corp
Site Name: OU-3 Remedial Action Specific Area: _____
Site Location (City, County, State): Anniston, Calhoun County, Alabama

Date: 10/30/16 **Weather Conditions:** Temp: Min 52° Max 87°
Description (Sunny, Cloudy, Overcast, etc) _____
Precipitation: _____ Inches

Work Performed Today (Indicate location and description of work performed and note any safety issues or deviations from the H&S plan):

NO WORKED PERFORMED

	Yes	No
BMP maintenance and inspection:		
a) Inspection of engineering controls performed (ea. week and after rainfall)?	☐	☐
b) Attach weekly inspection forms (BMP and stormwater forms)?	☐	☐
c) Note any correction of defects below?	☐	☐
d) Weekly stormwater form?	☐	☐

Comments:

Dust maintenance and monitoring:

(note if dust suppression is applied)

MIKE LILLO
Name / Signature

10/31/16
Date

CBMPP INSPECTION FIELD REPORT LOG

Contractor Name: Taylor Corp
Site Name: OU-3 Remedial Action Specific Area: AREA A
Site Location (City, County, State): Anniston, Calhoun County, Alabama

Date: 10/30/16 **Weather Conditions:** Temp: Min 52° Max 88°
Description (Sunny, Cloudy, Overcast, etc) Sunny
Precipitation: 0 Inches

Work Performed Today (Indicate location and description of work performed and note any safety issues or deviations from the H&S plan):

AREA A - ALMOST ESTABLISHED, A FEW BARE SPOTS TO WORK WITH FOR COMPLETION

	Yes	No
BMP maintenance and inspection:		
a) Inspection of engineering controls performed (ea. week and after rainfall)?	☑	☐
b) Attach weekly inspection forms (BMP and stormwater forms)?	☑	☐
c) Note any correction of defects below?	☑	☐
d) Weekly stormwater form?	☑	☐

Comments: NO RAIN TO CAUSE DISCHARGE OR DAMAGE.

Dust maintenance and monitoring: N/A

NONE USED

(note if dust suppression is applied)

MIKE LILLY
Name / Signature

11/1/16
Date

STORMWATER INSPECITON AND MAINTENANCE REPORT FORM

Site Name: Anniston PCB Site, OU-3 Remedial Action Cover Systems

Site Location: Anniston, Calhoun County, Alabama

NPDES Permit Number: Not Applicable

Weekly Rainfall Summary:

Day:	Sun	Mon	Tues	Wed	Thurs	Fri	Sat
	10/30/16	10/31/16	11/01/16	11/02/16	11/03/16	11/04/16	11/05/16
Rainfall:	Ø	Ø	Ø	Ø	Ø	Ø	Ø

Sampling Information: None

- **Sample Type:**
- **Location:** N/A
- **Analysis:**

Inspection Results:

- **Deficiencies or Required Maintenanc**
- **Planned Corrective Action:** SEVERE Drought For the State
- **Corrective Action Sch**
- **Other Comments:**

Signature

11/7/16
Date

CBMPP INSPECTION FIELD REPORT LOG

Contractor Name: Taylor Corp
Site Name: OU-3 Remedial Action Specific Area: AREA A
Site Location (City, County, State): Anniston, Calhoun County, Alabama

Date: 11/1/16

Weather Conditions: Temp: Min 56° Max 88°
Description (Sunny, Cloudy, Overcast, etc) Sunny
Precipitation: 0 Inches

Work Performed Today (Indicate location and description of work performed and note any safety issues or deviations from the H&S plan):

AREA A - SAME AS USUAL, ESTABLISH GROWTH FOR COMPLETION OF THAT AREA.

	Yes	No
BMP maintenance and inspection:		
a) Inspection of engineering controls performed (ea. week and after rainfall)?	☑	☐
b) Attach weekly inspection forms (BMP and stormwater forms)?	☑	☐
c) Note any correction of defects below?	☑	☐
d) Weekly stormwater form?	☑	☐

Comments: NO RAIN, SEVERE DROUGHT, NO DAMAGE OR DISCHARGE OF REMAINING BMPS

Dust maintenance and monitoring: N/A

NONE USED

(note if dust suppression is applied)

MIKE WILLIS
Name / Signature

11/2/16
Date

CBMPP INSPECTION FIELD REPORT LOG

Contractor Name: Taylor Corp
Site Name: OU-3 Remedial Action Specific Area: AREA A
Site Location (City, County, State): Anniston, Calhoun County, Alabama

Date: 11/2/16 **Weather Conditions:** Temp: Min 60° Max 80°
Description (Sunny, Cloudy, Overcast, etc) overcast
Precipitation: 0 Inches

Work Performed Today (Indicate location and description of work performed and note any safety issues or deviations from the H&S plan):

AREA A - RE SEEDED BARE AREAS AGAIN to promote FASTER GROWTH, MAKES BARE AREAS to ESTABLISH quicker

	Yes	No
BMP maintenance and inspection:		
a) Inspection of engineering controls performed (ea. week and after rainfall)?	☑	☐
b) Attach weekly inspection forms (BMP and stormwater forms)?	☑	☐
c) Note any correction of defects below?	☑	☐
d) Weekly stormwater form?	☑	☐

Comments: NO Rain, NO discharge or damage.

Dust maintenance and monitoring: N/A

NONE USED

(note if dust suppression is applied)

MIKE WILLIS
Name / Signature

11/3/16
Date

CBMPP INSPECTION FIELD REPORT LOG

Contractor Name: Taylor Corp
Site Name: OU-3 Remedial Action Specific Area: Area A
Site Location (City, County, State): Anniston, Calhoun County, Alabama

Date: 11/3/16

Weather Conditions: Temp: Min 58° Max 85°
Description (Sunny, Cloudy, Overcast, etc) Sunny/cloudy
Precipitation: 0 Inches

Work Performed Today (Indicate location and description of work performed and note any safety issues or deviations from the H&S plan):

Area A - Same as usual, Maneuver sprinkler system to maximize areas getting sprayed that need it.

	Yes	No
BMP maintenance and inspection:		
a) Inspection of engineering controls performed (ea. week and after rainfall)?	☑	☐
b) Attach weekly inspection forms (BMP and stormwater forms)?	☑	☐
c) Note any correction of defects below?	☑	☐
d) Weekly stormwater form?	☑	☐

Comments: No Rain, No discharge or damage

Dust maintenance and monitoring: N/A

Nine used

(note if dust suppression is applied)

Mike Lolo
Name / Signature

11/4/16
Date

CBMPP INSPECTION FIELD REPORT LOG

Contractor Name: Taylor Corp
Site Name: OU-3 Remedial Action Specific Area: AREA A,
Site Location (City, County, State): Anniston, Calhoun County, Alabama

Date: 11/4/16

Weather Conditions: Temp: Min 47 Max 80
Description (Sunny, Cloudy, Overcast, etc) OVERCAST
Precipitation: 0 Inches

Work Performed Today (Indicate location and description of work performed and note any safety issues or deviations from the H&S plan):

AREA A - Establish BARE AREAS, RESEEDED by HAND IN BARE SPOTS IN HOPES that it will grow

	Yes	No
BMP maintenance and inspection:		
a) Inspection of engineering controls performed (ea. week and after rainfall)?	☑	☐
b) Attach weekly inspection forms (BMP and stormwater forms)?	☑	☐
c) Note any correction of defects below?	☑	☐
d) Weekly stormwater form?	☑	☐

Comments: NO Rain, discharge or damage (+40 days of drought FOR this AREA

Dust maintenance and monitoring: N/A

NONE USED

(note if dust suppression is applied)

MIKE LILLY
Name / Signature

11/5/16
Date

CBMPP INSPECTION FIELD REPORT LOG

Contractor Name: Taylor Corp
Site Name: OU-3 Remedial Action Specific Area:
Site Location (City, County, State): Anniston, Calhoun County, Alabama

Date: 11/5/16

Weather Conditions: Temp: Min 45° Max 77°
Description (Sunny, Cloudy, Overcast, etc) Cloudy
Precipitation: 0 Inches

Work Performed Today (Indicate location and description of work performed and note any safety issues or deviations from the H&S plan):

no work performed (Army Day 11)

	Yes	No
BMP maintenance and inspection:		
a) Inspection of engineering controls performed (ea. week and after rainfall)?	☐	☐
b) Attach weekly inspection forms (BMP and stormwater forms)?	☐	☐
c) Note any correction of defects below?	☐	☐
d) Weekly stormwater form?	☐	☐

Comments:

Dust maintenance and monitoring:

(note if dust suppression is applied)

Mike [illegible]
Name / Signature

11/6/16
Date

STORMWATER INSPECITON AND MAINTENANCE REPORT FORM

Site Name: Anniston PCB Site, OU-3 Remedial Action Cover Systems

Site Location: Anniston, Calhoun County, Alabama

NPDES Permit Number: Not Applicable

Weekly Rainfall Summary:

Day:	Sun	Mon	Tues	Wed	Thurs	Fri	Sat
Date:	11/6/16	11/7/16	11/8/16	11/9/16	11/10/16	11/11/16	11/12/16
Rainfall:	Ø	Ø	Ø	Ø	Ø	Ø	Ø

Sampling Information:

- **Sample Type:**
- **Location:**
- **Analysis:**

NA

Inspection Results:

- **Deficiencies or Required Maintenance:**
- **Planned Corrective Action:**
- **Corrective Action Schedule:**
- **Other Comments:**

[signature] 11/14/16

Signature **Date**

CBMPP INSPECTION FIELD REPORT LOG

Contractor Name: Taylor Coop
Site Name: OU-3 Remedial Action Specific Area:
Site Location (City, County, State): Anniston, Calhoun County, Alabama

Date: 11/6/16

Weather Conditions: Temp: Min 44 Max 76
Description (Sunny, Cloudy, Overcast, etc) Clear
Precipitation: 0 Inches

Work Performed Today (Indicate location and description of work performed and note any safety issues or deviations from the H&S plan):

HAD ARMY DRILL, WAS NOT HERE.

	Yes	No
BMP maintenance and inspection:		
a) Inspection of engineering controls performed (ea. week and after rainfall)?	☐	☐
b) Attach weekly inspection forms (BMP and stormwater forms)?	☐	☐
c) Note any correction of defects below?	☐	☐
d) Weekly stormwater form?	☐	☐

Comments: NONE

Dust maintenance and monitoring: n/a

n/a

(note if dust suppression is applied)

Mike Lillo
Name / Signature

11/7/16
Date

CBMPP INSPECTION FIELD REPORT LOG

Contractor Name: Taylor Corp
Site Name: OU-3 Remedial Action Specific Area: AREA A
Site Location (City, County, State): Anniston, Calhoun County, Alabama

Date: 11/7/16

Weather Conditions: Temp: Min 48 Max 77
Description (Sunny, Cloudy, Overcast, etc) Clear
Precipitation: 0 Inches

Work Performed Today (Indicate location and description of work performed and note any safety issues or deviations from the H&S plan):

Spread seed in bare areas, continued to water Area A to establish growth

	Yes	No
BMP maintenance and inspection:		
a) Inspection of engineering controls performed (ea. week and after rainfall)?	☑	☐
b) Attach weekly inspection forms (BMP and stormwater forms)?	☐	☐
c) Note any correction of defects below?	☐	☐
d) Weekly stormwater form?	☐	☐

Comments: BMPs are fine, in a drought so discharge is unlikely

Dust maintenance and monitoring: n/a

n/a

(note if dust suppression is applied)

Mike Lilly
Name / Signature

11/8/16
Date

CBMPP INSPECTION FIELD REPORT LOG

Contractor Name: Taylor Corp
Site Name: OU-3 Remedial Action Specific Area: AREA A, COURSES GREEN, AREA E
Site Location (City, County, State): Anniston, Calhoun County, Alabama

Date: 11/8/16

Weather Conditions: Temp: Min 48 Max 71
Description (Sunny, Cloudy, Overcast, etc) Cloudy
Precipitation: 0 Inches

Work Performed Today (Indicate location and description of work performed and note any safety issues or deviations from the H&S plan):

SAME FOR AREA A.
DAVE SONNY 4 hr competent ladder structure course
AREA E - Robbie Brown

	Yes	No
BMP maintenance and inspection:		
a) Inspection of engineering controls performed (ea. week and after rainfall)?	☐	☐
b) Attach weekly inspection forms (BMP and stormwater forms)?	☐	☐
c) Note any correction of defects below?	☐	☐
d) Weekly stormwater form?	☐	☐

Comments: BMPs are fine, no discharge likely due to severe drought

Dust maintenance and monitoring:

(note if dust suppression is applied)

Mike Cline
Name / Signature

11/9/16
Date

CBMPP INSPECTION FIELD REPORT LOG

Contractor Name: Taylor Corp
Site Name: OU-3 Remedial Action Specific Area: AREA D, AREA E
Site Location (City, County, State): Anniston, Calhoun County, Alabama

Date: 11/9/16 **Weather Conditions:** Temp: Min 67 Max 72
Description (Sunny, Cloudy, Overcast, etc) Cloudy
Precipitation: 0 Inches

Work Performed Today (Indicate location and description of work performed and note any safety issues or deviations from the H&S plan):

SAME WORK PERFORMED IN AREA A
AREA E - Robbie Brown Co.

	Yes	No
BMP maintenance and inspection:		
a) Inspection of engineering controls performed (ea. week and after rainfall)?	☑	☐
b) Attach weekly inspection forms (BMP and stormwater forms)?	☑	☐
c) Note any correction of defects below?	☑	☐
d) Weekly stormwater form?	☐	☐

Comments: NO damage or discharge

Dust maintenance and monitoring: N/A

N/A

(note if dust suppression is applied)

MICHELLE [illegible]
Name / Signature

11/10/16
Date

CBMPP INSPECTION FIELD REPORT LOG

Contractor Name: Taylor Corp
Site Name: OU-3 Remedial Action Specific Area: AREA A, AREA E
Site Location (City, County, State): Anniston, Calhoun County, Alabama

Date: 11/11/16

Weather Conditions: Temp: Min 31° Max 71°
Description (Sunny, Cloudy, Overcast, etc) OVERCAST
Precipitation: 0 Inches

Work Performed Today (Indicate location and description of work performed and note any safety issues or deviations from the H&S plan):

AREA A - SAME WORK PERFORMED, ALMOST ESTABLISHED WHITE AREA, FEW BARE AREAS THAT NEED ATTENTION.
AREA E - ROBBIE BROWN CO.

	Yes	No
BMP maintenance and inspection:		
a) Inspection of engineering controls performed (ea. week and after rainfall)?	☑	☐
b) Attach weekly inspection forms (BMP and stormwater forms)?	☑	☐
c) Note any correction of defects below?	☑	☐
d) Weekly stormwater form?	☑	☐

Comments: NO RAIN FOR ANY DISCHARGE NOR DAMAGE.

Dust maintenance and monitoring: N/A

NONE USED

(note if dust suppression is applied)

MIKE LOW
Name / Signature

11/12/16
Date

CBMPP INSPECTION FIELD REPORT LOG

Contractor Name: Taylor Corp
Site Name: OU-3 Remedial Action Specific Area:
Site Location (City, County, State): Anniston, Calhoun County, Alabama

Date: 11/12/14

Weather Conditions: Temp: Min 45 Max 68
Description (Sunny, Cloudy, Overcast, etc) Cloudy
Precipitation: 0 Inches

Work Performed Today (Indicate location and description of work performed and note any safety issues or deviations from the H&S plan):

DID NOT WORK THIS SITE ON THIS DAY.

	Yes	No
BMP maintenance and inspection:		
a) Inspection of engineering controls performed (ea. week and after rainfall)?	☐	☐
b) Attach weekly inspection forms (BMP and stormwater forms)?	☐	☐
c) Note any correction of defects below?	☐	☐
d) Weekly stormwater form?	☐	☐

Comments: NONE

Dust maintenance and monitoring: N/A

N/A

(note if dust suppression is applied)

MICHELLE MILLER
Name / Signature

11/13/14
Date

STORMWATER INSPECITON AND MAINTENANCE REPORT FORM

Site Name: Anniston PCB Site, OU-3 Remedial Action Cover Systems

Site Location: Anniston, Calhoun County, Alabama

NPDES Permit Number: Not Applicable

Weekly Rainfall Summary:

Day:	Sun	Mon	Tues	Wed	Thurs	Fri	Sat
Date:	11/13/16	11/14/16	11/15/16	11/16/16	11/17/	11/18/16	11/19/16
Rainfall:	Ø	Ø	Ø	Ø	Ø	Ø	Ø

Sampling Information: N/A

- **Sample Type:**
- **Location:**
- **Analysis:**

Inspection Results:

- **Deficiencies or Required Maintenance:** NONE
- **Planned Corrective Action:**
- **Corrective Action Schedule:**
- **Other Comments:**

Signature **Date** 11/21/16

CBMPP INSPECTION FIELD REPORT LOG

Contractor Name: Taylor Corp
Site Name: OU-3 Remedial Action Specific Area:
Site Location (City, County, State): Anniston, Calhoun County, Alabama

Date: 11/13/16

Weather Conditions: Temp: Min 45° Max 69°
Description (Sunny, Cloudy, Overcast, etc) Clear
Precipitation: 0 Inches

Work Performed Today (Indicate location and description of work performed and note any safety issues or deviations from the H&S plan):

No Work

	Yes	No
BMP maintenance and inspection:		
a) Inspection of engineering controls performed (ea. week and after rainfall)?	☐	☐
b) Attach weekly inspection forms (BMP and stormwater forms)?	☐	☐
c) Note any correction of defects below?	☐	☐
d) Weekly stormwater form?	☐	☐

Comments:

Dust maintenance and monitoring:

(note if dust suppression is applied)

Mike Lilly
Name / Signature

11/14/16
Date

CBMPP INSPECTION FIELD REPORT LOG

Contractor Name: Taylor Corp
Site Name: OU-3 Remedial Action Specific Area: AREA D, AREA E
Site Location (City, County, State): Anniston, Calhoun County, Alabama

Date: 11/14/16 **Weather Conditions:** Temp: Min 38° Max 69°
Description (Sunny, Cloudy, Overcast, etc) Clear
Precipitation: 0 Inches

Work Performed Today (Indicate location and description of work performed and note any safety issues or deviations from the H&S plan):

AREA A - SEED & WATER CONTINUOUSLY
AREA E - ROBBIE BROWN
I FINISHED OUT DAY AT THE SHOP AFTER - DRIVING TO BIRMINGHAM

	Yes	No
BMP maintenance and inspection:		
a) Inspection of engineering controls performed (ea. week and after rainfall)?	☑	☐
b) Attach weekly inspection forms (BMP and stormwater forms)?	☑	☐
c) Note any correction of defects below?	☑	☐
d) Weekly stormwater form?	☑	☐

Comments: NO RAIN TO CAUSE DISCHARGE OR DAMAGE

Dust maintenance and monitoring: NO
NONE USED
(note if dust suppression is applied)

MIKE LICO / [signature]
Name / Signature

11/15/16
Date

CBMPP INSPECTION FIELD REPORT LOG

Contractor Name: Taylor Corp
Site Name: OU-3 Remedial Action Specific Area: AREA A
Site Location (City, County, State): Anniston, Calhoun County, Alabama

Date: 11/15/16

Weather Conditions: Temp: Min 35° Max 70°
Description (Sunny, Cloudy, Overcast, etc) Cloudy
Precipitation: 0 Inches

Work Performed Today (Indicate location and description of work performed and note any safety issues or deviations from the H&S plan):

AREA A - Continuously Establishing AREA BASE Spots
Drove to Vellano Bro. to pick up MATERIALS

BMP maintenance and inspection:	Yes	No
a) Inspection of engineering controls performed (ea. week and after rainfall)?	☑	☐
b) Attach weekly inspection forms (BMP and stormwater forms)?	☑	☐
c) Note any correction of defects below?	☑	☐
d) Weekly stormwater form?	☑	☐

Comments: No damage or discharge

Dust maintenance and monitoring: N/A
NONE USED
(note if dust suppression is applied)

Mike Lilly
Name / Signature

11/16/16
Date

CBMPP INSPECTION FIELD REPORT LOG

Contractor Name: Taylor Corp
Site Name: OU-3 Remedial Action Specific Area: Area A
Site Location (City, County, State): Anniston, Calhoun County, Alabama

Date: 11/16/16

Weather Conditions: Temp: Min 40° Max 87°
Description (Sunny, Cloudy, Overcast, etc) Clear
Precipitation: 0 Inches

Work Performed Today (Indicate location and description of work performed and note any safety issues or deviations from the H&S plan):

Establish Area A, drive to Pell City then Talladega to pick up supplies.

	Yes	No
BMP maintenance and inspection:		
a) Inspection of engineering controls performed (ea. week and after rainfall)?	☑	☐
b) Attach weekly inspection forms (BMP and stormwater forms)?	☑	☐
c) Note any correction of defects below?	☑	☐
d) Weekly stormwater form?	☑	☐

Comments: No damage or discharge

Dust maintenance and monitoring: N/A

N/A

(note if dust suppression is applied)

Mike Lilio
Name / Signature

11/17/16
Date

CBMPP INSPECTION FIELD REPORT LOG

Contractor Name: Taylor Corp
Site Name: OU-3 Remedial Action Specific Area: AREA A
Site Location (City, County, State): Anniston, Calhoun County, Alabama

Date: 11/18/16

Weather Conditions: Temp: Min _____ Max _____
Description (Sunny, Cloudy, Overcast, etc) _____
Precipitation: _____ Inches

Work Performed Today (Indicate location and description of work performed and note any safety issues or deviations from the H&S plan):

AREA A WAS being WATERED until I LEFT to get Equipment FROM BIRMINGHAM AND LOAD TRUCK TRAILER FOR ARKANSAS

	Yes	No
BMP maintenance and inspection:		
a) Inspection of engineering controls performed (ea. week and after rainfall)?	☑	☐
b) Attach weekly inspection forms (BMP and stormwater forms)?	☑	☐
c) Note any correction of defects below?	☑	☐
d) Weekly stormwater form?	☑	☐

Comments: NO RAIN FOR MONTH of NOVEMBER up until this point, SO NO discharge OR damage

Dust maintenance and monitoring: N/A

NONE

(note if dust suppression is applied)

MILÉ LILIO / [signature]
Name / Signature

11/19/16
Date

CBMPP INSPECTION FIELD REPORT LOG

Contractor Name: Taylor Corp
Site Name: OU-3 Remedial Action Specific Area: BMP Inspection
Site Location (City, County, State): Anniston, Calhoun County, Alabama

Date: 11/19/16 **Weather Conditions:** Temp: Min _____ Max _____
Description (Sunny, Cloudy, Overcast, etc) _____
Precipitation: _____ Inches

Work Performed Today (Indicate location and description of work performed and note any safety issues or deviations from the H&S plan):

No work performed other than look over BMP's

	Yes	No
BMP maintenance and inspection:		
a) Inspection of engineering controls performed (ea. week and after rainfall)?	☑	☐
b) Attach weekly inspection forms (BMP and stormwater forms)?	☑	☐
c) Note any correction of defects below?	☑	☐
d) Weekly stormwater form?	☑	☐

Comments: No damage or discharge

Dust maintenance and monitoring: N/A

None

(note if dust suppression is applied)

Mike Lilo
Name / Signature

11/20/16
Date

STORMWATER INSPECITON AND MAINTENANCE REPORT FORM

Site Name: Anniston PCB Site, OU-3 Remedial Action Cover Systems

Site Location: Anniston, Calhoun County, Alabama

NPDES Permit Number: Not Applicable

Weekly Rainfall Summary:

Day:	Sun	Mon	Tues	Wed	Thurs	Fri	Sat
Date:	11/20/16	11/21/16	11/22/16	11/23/16	11/24/16	11/25/16	11/26/16
Rainfall:	Ø	Ø	Ø	Ø	Ø	Ø	Ø

Sampling Information:

- **Sample Type:**
- **Location:**
- **Analysis:**

N/A

Inspection Results:

- **Deficiencies or Required Maintenance:** NO RAIN AT ALL FOR ANY POSSIBLE DISCHARGE, DROUGHT WAS STILL IN EFFECT FOR STATE OF ALABAMA GOING ON 50 OR MORE DAYS.
- **Planned Corrective Action:**
- **Corrective Action Schedule:**
- **Other Comments:** WAS OUT OF STATE, NOT SURE WHO CHECKED BMP'S FOR DAMAGE OR DISCHARGE.

[signature] 12/05/16

Signature **Date**

CBMPP INSPECTION FIELD REPORT LOG

Contractor Name: Taylor Corp
Site Name: OU-3 Remedial Action Specific Area:
Site Location (City, County, State): Anniston, Calhoun County, Alabama

Date: 11/20/16 **Weather Conditions:** Temp: Min 29° Max 57°
Description (Sunny, Cloudy, Overcast, etc) Clear
Precipitation: 0 Inches

Work Performed Today (Indicate location and description of work performed and note any safety issues or deviations from the H&S plan):

WAS IN ARKANSAS WORKING ON SHUTDOWN, NOT SURE WHO WAS HERE TO CHECK BMPS

	Yes	No
BMP maintenance and inspection:		
a) Inspection of engineering controls performed (ea. week and after rainfall)?	☐	☐
b) Attach weekly inspection forms (BMP and stormwater forms)?	☐	☐
c) Note any correction of defects below?	☐	☐
d) Weekly stormwater form?	☑	☐

Comments: NONE

Dust maintenance and monitoring: N/A

N/A

(note if dust suppression is applied)

Name / Signature

12/05/16
Date

CBMPP INSPECTION FIELD REPORT LOG

Contractor Name: Taylor Corp
Site Name: OU-3 Remedial Action Specific Area:
Site Location (City, County, State): Anniston, Calhoun County, Alabama

Date: 11/21/16

Weather Conditions: Temp: Min 23° Max 61°
Description (Sunny, Cloudy, Overcast, etc) CLEAR
Precipitation: 0 Inches

Work Performed Today (Indicate location and description of work performed and note any safety issues or deviations from the H&S plan):

WAS IN ARKANSAS WORKING ON SHUTDOWN, NOT SURE WHO CHECKED BMPS

	Yes	No
BMP maintenance and inspection:		
a) Inspection of engineering controls performed (ea. week and after rainfall)?	☐	☒
b) Attach weekly inspection forms (BMP and stormwater forms)?	☐	☒
c) Note any correction of defects below?	☐	☒
d) Weekly stormwater form?	☐	☒

Comments: NONE

Dust maintenance and monitoring: N/A

N/A

(note if dust suppression is applied)

MILE LILLO
Name / Signature

12/05/16
Date

CBMPP INSPECTION FIELD REPORT LOG

Contractor Name: Taylor Corp
Site Name: OU-3 Remedial Action Specific Area:
Site Location (City, County, State): Anniston, Calhoun County, Alabama

Date: 11/22/16 **Weather Conditions:** Temp: Min 29° Max 69°
Description (Sunny, Cloudy, Overcast, etc) Clear
Precipitation: 0 Inches

Work Performed Today (Indicate location and description of work performed and note any safety issues or deviations from the H&S plan):

WAS IN ARKANSAS WORKING (SHUTDOWN, NOT SURE WHY) WAS HERE TO CHECK BMPS

	Yes	No
BMP maintenance and inspection:		
a) Inspection of engineering controls performed (ea. week and after rainfall)?	☐	☐
b) Attach weekly inspection forms (BMP and stormwater forms)?	☐	☐
c) Note any correction of defects below?	☐	☐
d) Weekly stormwater form?	☐	☐

Comments: NONE

Dust maintenance and monitoring: N/A

N/A

(note if dust suppression is applied)

MIKE LUIO
Name / Signature

12/05/16
Date

CBMPP INSPECTION FIELD REPORT LOG

Contractor Name: Taylor Corp
Site Name: OU-3 Remedial Action Specific Area: _____
Site Location (City, County, State): Anniston, Calhoun County, Alabama

Date: 11/23/16

Weather Conditions: Temp: Min 38° Max 72°
Description (Sunny, Cloudy, Overcast, etc) OVERCAST
Precipitation: 0 Inches

Work Performed Today (Indicate location and description of work performed and note any safety issues or deviations from the H&S plan):

IN ARKANSAS, NOT SURE WHO WAS HERE TO CHECK BMPs

	Yes	No
BMP maintenance and inspection:		
a) Inspection of engineering controls performed (ea. week and after rainfall)?	☐	☑
b) Attach weekly inspection forms (BMP and stormwater forms)?	☐	☑
c) Note any correction of defects below?	☐	☑
d) Weekly stormwater form?	☑	☐

Comments: NONE

Dust maintenance and monitoring: N/A

N/A

(note if dust suppression is applied)

MILE LILLO
Name / Signature

12/05/16
Date

CBMPP INSPECTION FIELD REPORT LOG

Contractor Name: Taylor Corp
Site Name: OU-3 Remedial Action Specific Area: _____
Site Location (City, County, State): Anniston, Calhoun County, Alabama

Date: 11/24/16

Weather Conditions: Temp: Min 47 Max 77
Description (Sunny, Cloudy, Overcast, etc) Cloudy
Precipitation: 0 Inches

Work Performed Today (Indicate location and description of work performed and note any safety issues or deviations from the H&S plan):

IN ARKANSAS, NOT SURE WHO CHECKED BMPs WHILE I WAS GONE

	Yes	No
BMP maintenance and inspection:		
a) Inspection of engineering controls performed (ea. week and after rainfall)?	☐	☐
b) Attach weekly inspection forms (BMP and stormwater forms)?	☐	☐
c) Note any correction of defects below?	☐	☐
d) Weekly stormwater form?	☑	☐

Comments: NONE

Dust maintenance and monitoring: N/A

N/A

(note if dust suppression is applied)

MIKE LILLO
Name / Signature

12/05/16
Date

CBMPP INSPECTION FIELD REPORT LOG

Contractor Name: Taylor Corp
Site Name: OU-3 Remedial Action Specific Area:
Site Location (City, County, State): Anniston, Calhoun County, Alabama

Date: 11/26/16

Weather Conditions: Temp: Min 30 Max 60
Description (Sunny, Cloudy, Overcast, etc) Clear
Precipitation: 0 Inches

Work Performed Today (Indicate location and description of work performed and note any safety issues or deviations from the H&S plan):

IN ARKANSAS, not sure who replacement was to check BMPs

	Yes	No
BMP maintenance and inspection:		
a) Inspection of engineering controls performed (ea. week and after rainfall)?	☐	☐
b) Attach weekly inspection forms (BMP and stormwater forms)?	☐	☐
c) Note any correction of defects below?	☐	☐
d) Weekly stormwater form?	☑	☐

Comments: NONE

Dust maintenance and monitoring: N/A

N/A

(note if dust suppression is applied)

Mike Lowe
Name / Signature

12/05/16
Date

STORMWATER INSPECITON AND MAINTENANCE REPORT FORM

Site Name: Anniston PCB Site, OU-3 Remedial Action Cover Systems

Site Location: Anniston, Calhoun County, Alabama

NPDES Permit Number: Not Applicable

Weekly Rainfall Summary:

Day:	Sun	Mon	Tues	Wed	Thurs	Fri	Sat
Date:	11/27/16	11/28/16	11/29/16	11/30/16	12/01/16	12/02/16	12/03/16
Rainfall:	Ø	1.68	0.49	0.85	Ø	Ø	0.12

Sampling Information:

- **Sample Type:**
- **Location:**
- **Analysis:**

N/A

Inspection Results:

- **Deficiencies or Required Maintenance:** ACCORDING TO MEN ON SITE THERE WAS A BLOWOUT OF WATTLES BY NORTHSIDE GATE. OTHERS BMPs ALONG 7th ST. WAS told to be TAKEN OUT WEEKS PRIOR
- **Planned Corrective Action:** INSTALL NEW BMPs.
- **Corrective Action Schedule:** BEFORE I CAME BACK FROM ARKANSAS PROBLEM HAD BEEN CORRECTED
- **Other Comments:**

Signature

12/05/16
Date

CBMPP INSPECTION FIELD REPORT LOG

Contractor Name: Taylor Corp
Site Name: OU-3 Remedial Action Specific Area: _____
Site Location (City, County, State): Anniston, Calhoun County, Alabama

Date: 11/27/16

Weather Conditions: Temp: Min 28° Max 65°
Description (Sunny, Cloudy, Overcast, etc) Sunny
Precipitation: 0 inches

Work Performed Today (Indicate location and description of work performed and note any safety issues or deviations from the H&S plan):

WAS IN ARKANSAS FROM 11/20/16 - 11/29/16

	Yes	No
BMP maintenance and inspection:		
a) Inspection of engineering controls performed (ea. week and after rainfall)?	☐	☐
b) Attach weekly inspection forms (BMP and stormwater forms)?	☐	☐
c) Note any correction of defects below?	☐	☐
d) Weekly stormwater form?	☑	☒

Comments: NONE

Dust maintenance and monitoring: N/A

N/A

(note if dust suppression is applied)

MIKE LILLY
Name / Signature

12/05/16
Date

CBMPP INSPECTION FIELD REPORT LOG

Contractor Name: Taylor Corp
Site Name: OU-3 Remedial Action Specific Area: BMPs
Site Location (City, County, State): Anniston, Calhoun County, Alabama

Date: 11/28/16

Weather Conditions: Temp: Min 50° Max 72°
Description (Sunny, Cloudy, Overcast, etc) RAIN
Precipitation: 1.68 Inches

Work Performed Today (Indicate location and description of work performed and note any safety issues or deviations from the H&S plan):

WAS IN ARKANSAS FROM 11/20/16 - 11/29/16

	Yes	No
BMP maintenance and inspection:		
a) Inspection of engineering controls performed (ea. week and after rainfall)?	☐	☐
b) Attach weekly inspection forms (BMP and stormwater forms)?	☐	☐
c) Note any correction of defects below?	☐	☐
d) Weekly stormwater form?	☑	☐

Comments: CAME IN DEC 3 2016 AND LOOKED AT REMAINING BMPS, PART OF SILT FENCE DOWN IN BORROW SOURCE, LOOKED LIKE SOMEONE PUT NEW WATTLES AND MORE SANDBAGS BY NORTH SIDE GATE. FEW WEEKS PRIOR I WAS TOLD TO REMOVE BMPS OFF 7th ST. THAT COULD HAVE HELPED WITH ANY BLOWOUT OR DISCHARGE FROM NORTH SIDE GATE. BMPs AT PCB CELLS ALONG SIDE TREELINE CAN BE REMOVED DUE TO THE TALL GRASS AND BRUSH THAT HAS GROWN OR LEFT IN PLACE.

Dust maintenance and monitoring: N/A

N/A

(note if dust suppression is applied)

MIKE LILLO
Name / Signature

12/5/16
Date

CBMPP INSPECTION FIELD REPORT LOG

Contractor Name: Taylor Corp
Site Name: OU-3 Remedial Action Specific Area: BMP
Site Location (City, County, State): Anniston, Calhoun County, Alabama

Date: 11/29/16

Weather Conditions: Temp: Min 54° Max 75°
Description (Sunny, Cloudy, Overcast, etc) RAIN
Precipitation: 0.49 Inches

Work Performed Today (Indicate location and description of work performed and note any safety issues or deviations from the H&S plan):

WAS DRIVING FROM SHUT DOWN JOB IN ARKANSAS, DID NOT PERFORM WORK.

	Yes	No
BMP maintenance and inspection:		
a) Inspection of engineering controls performed (ea. week and after rainfall)?	☐	☐
b) Attach weekly inspection forms (BMP and stormwater forms)?	☐	☐
c) Note any correction of defects below?	☐	☐
d) Weekly stormwater form?	☑	☐

Comments: SAME COMMENTS AS 11/28/16

Dust maintenance and monitoring: N/A

N/A

(note if dust suppression is applied)

MIKE LILLO
Name / Signature

12/05/16
Date

CBMPP INSPECTION FIELD REPORT LOG

Contractor Name: Taylor Corp
Site Name: OU-3 Remedial Action Specific Area:
Site Location (City, County, State): Anniston, Calhoun County, Alabama

Date: 11/30/16

Weather Conditions: Temp: Min 42° Max 73°
Description (Sunny, Cloudy, Overcast, etc) T Storm
Precipitation: 0.85 Inches

Work Performed Today (Indicate location and description of work performed and note any safety issues or deviations from the H&S plan):

NONE

	Yes	No
BMP maintenance and inspection:		
a) Inspection of engineering controls performed (ea. week and after rainfall)?	☐	☐
b) Attach weekly inspection forms (BMP and stormwater forms)?	☐	☐
c) Note any correction of defects below?	☐	☐
d) Weekly stormwater form?	☑	☐

Comments: SAME COMMENTS AS 11/28/16

Dust maintenance and monitoring: N/A

N/A

(note if dust suppression is applied)

MILE GLEN
Name / Signature

12/05/16
Date

APPENDIX X

AIR MONITORING DATA REPORTS

DUST MONITORING SUMMARY

July 2015

This table is a summary of all the time weighted average values exceeding the given threshold for the month of July 2015, for all three dust monitors.

Threshold: 0.15 (mg/m^3)

Monitor	Date	Time	TWA (mg/m^3)
1	15-Jul-2015	10:58:22	0.870
1	15-Jul-2015	11:02:22	0.916
1	15-Jul-2015	11:06:22	0.915
2	22-Jul-2015	11:44:32	0.224
2	22-Jul-2015	11:48:32	0.235
2	22-Jul-2015	12:56:32	0.595
2	22-Jul-2015	13:00:32	1.202
2	22-Jul-2015	13:04:32	1.804
2	22-Jul-2015	13:08:32	1.805
2	22-Jul-2015	13:12:32	1.754
2	22-Jul-2015	13:16:32	1.319
2	22-Jul-2015	13:20:32	0.729
2	22-Jul-2015	13:24:32	0.169
2	27-Jul-2015	15:31:38	0.181
2	27-Jul-2015	15:35:38	0.225
2	27-Jul-2015	15:39:38	0.223

DUST MONITORING SUMMARY

August 2015

This table is a summary of all the time weighted average values exceeding the given threshold for the month of August 2015, for all three dust monitors.

Threshold: 0.15 (mg/m^3)

Monitor	Date	Time	TWA (mg/m^3)
1	28-Aug-2015	08:58:28	0.233
1	28-Aug-2015	09:02:28	0.233
3	28-Aug-2015	09:29:44	0.151
3	28-Aug-2015	09:33:44	0.206
3	28-Aug-2015	09:37:44	0.205
2	31-Aug-2015	14:45:32	0.176
2	31-Aug-2015	14:49:32	0.161
2	31-Aug-2015	14:53:32	0.159

DUST MONITORING SUMMARY

September 2015

This table is a summary of all the time weighted average values exceeding the given threshold for the month of September 2015, for all three dust monitors.

Threshold: 0.15 (mg/m^3)

Monitor	Date	Time	TWA (mg/m^3)
2	2-Sep-2015	10:17:55	0.156
2	2-Sep-2015	10:21:55	0.257
2	2-Sep-2015	10:25:55	0.275
2	2-Sep-2015	10:29:55	0.217
2	4-Sep-2015	10:15:20	0.238
2	4-Sep-2015	10:19:20	0.245
2	4-Sep-2015	10:23:20	0.461
2	4-Sep-2015	10:27:20	0.398
2	4-Sep-2015	10:31:20	0.460
2	4-Sep-2015	10:35:20	0.293
2	4-Sep-2015	10:39:20	0.268
2	4-Sep-2015	10:43:20	0.182
2	4-Sep-2015	10:47:20	0.152
2	4-Sep-2015	10:51:20	0.153
2	4-Sep-2015	10:55:20	0.165
2	4-Sep-2015	10:59:20	0.176
2	4-Sep-2015	11:03:20	0.181
2	4-Sep-2015	11:07:20	0.184
2	4-Sep-2015	11:11:20	0.184
2	4-Sep-2015	11:15:20	0.184
2	4-Sep-2015	11:19:20	0.187
2	4-Sep-2015	11:23:20	0.189
2	4-Sep-2015	11:27:20	0.191
2	4-Sep-2015	11:31:20	0.194
2	4-Sep-2015	11:35:20	0.198
2	4-Sep-2015	11:39:20	0.202
2	4-Sep-2015	11:43:20	0.206
2	4-Sep-2015	11:47:20	0.211
2	4-Sep-2015	11:51:20	0.216
2	4-Sep-2015	11:55:20	0.220
2	4-Sep-2015	11:59:20	0.222
2	4-Sep-2015	12:03:20	0.225
2	4-Sep-2015	12:07:20	0.228
2	4-Sep-2015	12:11:20	0.231
2	4-Sep-2015	12:15:20	0.235
2	4-Sep-2015	12:19:20	0.238

DUST MONITORING SUMMARY

September 2015

Threshold: **0.15 (mg/m^3)**

Monitor	Date	Time	TWA (mg/m^3)
2	4-Sep-2015	12:23:20	0.242
2	4-Sep-2015	12:27:20	0.247
2	4-Sep-2015	12:31:20	0.252
2	4-Sep-2015	12:35:20	0.256
2	4-Sep-2015	12:39:20	0.260
2	4-Sep-2015	12:43:20	0.263
2	4-Sep-2015	12:47:20	0.265
2	4-Sep-2015	12:51:20	0.269
2	4-Sep-2015	12:55:20	0.269
2	4-Sep-2015	12:59:20	0.269
2	4-Sep-2015	13:03:20	0.269
2	4-Sep-2015	13:07:20	0.269
2	4-Sep-2015	13:11:20	0.268
2	4-Sep-2015	13:15:20	0.267
2	4-Sep-2015	13:19:20	0.267
2	4-Sep-2015	13:23:20	0.267
2	4-Sep-2015	13:27:20	0.266
2	4-Sep-2015	13:31:20	0.265
2	4-Sep-2015	13:35:20	0.279
2	4-Sep-2015	13:39:20	0.280
2	4-Sep-2015	13:43:20	0.281
2	4-Sep-2015	13:47:20	0.268
2	4-Sep-2015	13:51:20	0.269
2	4-Sep-2015	13:55:20	0.267
2	4-Sep-2015	13:59:20	0.266
2	4-Sep-2015	14:03:20	0.265
2	4-Sep-2015	14:07:20	0.266
2	4-Sep-2015	14:11:20	0.266
2	4-Sep-2015	14:15:20	0.265
2	4-Sep-2015	14:19:20	0.264
2	4-Sep-2015	14:23:20	0.263
2	4-Sep-2015	14:27:20	0.264
2	4-Sep-2015	14:31:20	0.265
2	4-Sep-2015	14:35:20	0.267
3	9-Sep-2015	08:22:38	3.311
3	9-Sep-2015	08:26:38	30.738
3	9-Sep-2015	08:30:38	166.133
3	9-Sep-2015	08:34:38	250.900
3	9-Sep-2015	08:38:38	283.433
3	9-Sep-2015	08:42:38	165.000
3	9-Sep-2015	08:46:38	76.934
3	9-Sep-2015	08:50:38	16.967
3	9-Sep-2015	09:06:38	0.792

DUST MONITORING

September 2015

Threshold: **0.15 (mg/m^3)**

Monitor	Date	Time	Value (mg/m^3)
3	9-Sep-2015	9:10:38	0.793
3	9-Sep-2015	9:14:38	0.801
3	9-Sep-2015	9:22:38	0.177
3	9-Sep-2015	9:26:38	34.768
3	9-Sep-2015	9:30:38	34.720
3	9-Sep-2015	9:34:38	34.601
3	9-Sep-2015	11:06:38	0.258
3	9-Sep-2015	11:10:38	0.638
3	9-Sep-2015	11:14:38	0.985
3	9-Sep-2015	11:18:38	0.741
3	9-Sep-2015	11:22:38	0.365
1	11-Sep-2015	7:42:05	0.513
1	11-Sep-2015	7:46:05	0.453
1	11-Sep-2015	7:50:05	0.356
1	11-Sep-2015	7:54:05	0.246
1	11-Sep-2015	7:58:05	0.154
3	11-Sep-2015	7:37:31	0.699
3	11-Sep-2015	7:41:31	0.755
3	11-Sep-2015	7:45:31	0.796
3	11-Sep-2015	7:49:31	0.758
3	11-Sep-2015	7:53:31	0.567
3	11-Sep-2015	7:57:31	0.360
3	11-Sep-2015	8:01:31	0.183
1	15-Sep-2015	9:40:51	0.184
1	15-Sep-2015	9:44:51	0.183
1	15-Sep-2015	9:48:51	0.180
2	15-Sep-2015	12:07:42	0.200
2	15-Sep-2015	12:11:42	0.177
2	15-Sep-2015	12:15:42	0.173
1	15-Sep-2015	13:40:51	0.173
1	15-Sep-2015	13:44:51	0.177
1	15-Sep-2015	13:48:51	0.324
1	15-Sep-2015	13:52:51	0.153
1	15-Sep-2015	13:56:51	0.151
2	15-Sep-2015	12:51:42	0.295
2	15-Sep-2015	12:55:42	0.296
2	15-Sep-2015	12:59:42	0.296

DUST MONITORING SUMMARY

October 2015

This table is a summary of all the time weighted average values exceeding the given threshold for the month of October 2015, for all three dust monitors.

Threshold: 0.15 (mg/m^3)

Monitor	Date	Time	TWA (mg/m^3)
1	20-Oct-2015	13:21:29	0.315
1	20-Oct-2015	13:25:29	0.315
1	20-Oct-2015	13:29:29	0.343
1	21-Oct-2015	11:50:06	0.219
1	21-Oct-2015	11:54:06	0.226
1	21-Oct-2015	11:58:06	0.226
1	23-Oct-2015	07:56:56	0.280
1	23-Oct-2015	08:00:56	0.303
1	23-Oct-2015	08:04:56	0.303
3	7-Oct-2015	09:59:42	3.091
3	7-Oct-2015	10:03:42	12.287
3	7-Oct-2015	10:07:42	12.279
3	7-Oct-2015	10:11:42	9.199
3	23-Oct-2015	13:47:16	0.321
3	23-Oct-2015	13:51:16	0.350
3	23-Oct-2015	13:55:16	0.354

DUST MONITORING SUMMARY

November 2015

This table is a summary of all the time weighted average values exceeding the given threshold for the month of November 2015, for all three dust monitors.

Threshold: 0.15 (mg/m^3)

Monitor	Date	Time	TWA (mg/m^3)
No exceedances were recorded for this month.			

DUST MONITORING SUMMARY

December 2015

This table is a summary of all the time weighted average values exceeding the given threshold for the month of December 2015, for all three dust monitors.

Threshold: 0.15 (mg/m^3)

Monitor	Date	Time	TWA (mg/m^3)
No exceedances were recorded for this month.			

DUST MONITORING SUMMARY

January 2016

This table is a summary of all the time weighted average values exceeding the given threshold for the month of January 2016, for all three dust monitors.

Threshold: 0.15 (mg/m^3)

Monitor	Date	Time	TWA (mg/m^3)
No exceedances were recorded for this month.			

DUST MONITORING SUMMARY

February 2016

This table is a summary of all the time weighted average values exceeding the given threshold for the month of February 2016, for all three dust monitors.

Threshold: 0.15 (mg/m^3)

Monitor	Date	Time	Value (mg/m^3)
2	11-Feb-2016	10:52:40	0.514
2	11-Feb-2016	10:56:40	0.523
2	11-Feb-2016	11:00:40	0.499
3	12-Feb-2016	10:05:59	0.341
3	12-Feb-2016	10:09:59	0.654
3	12-Feb-2016	10:13:59	0.610
3	12-Feb-2016	10:17:59	0.493
3	12-Feb-2016	10:21:59	0.182
3	12-Feb-2016	10:25:59	0.204
3	16-Feb-2016	8:39:33	0.250
3	16-Feb-2016	8:43:33	0.293
3	16-Feb-2016	8:47:33	0.254
3	16-Feb-2016	8:51:33	0.177
3	16-Feb-2016	8:55:33	0.165
3	16-Feb-2016	8:59:33	0.168
3	16-Feb-2016	9:03:33	0.176
1	29-Feb-2016	13:20:30	0.938
1	29-Feb-2016	13:24:30	0.938
1	29-Feb-2016	13:28:30	0.938

DUST MONITORING SUMMARY

March 2016

This table is a summary of all the time weighted average values exceeding the given threshold for the month of March 2016, for all three dust monitors.

Threshold: 0.15 (mg/m^3)

Monitor	Date	Time	TWA (mg/m^3)
1	7-Mar-2016	11:37:43	0.156
1	7-Mar-2016	13:21:43	0.200
1	7-Mar-2016	13:25:43	0.328
1	7-Mar-2016	13:29:43	0.435
1	7-Mar-2016	13:33:43	1.080
1	7-Mar-2016	13:37:43	0.902
1	7-Mar-2016	13:41:43	0.817
1	7-Mar-2016	14:05:43	0.272
1	7-Mar-2016	14:09:43	0.291
1	7-Mar-2016	14:13:43	0.277
1	7-Mar-2016	14:25:43	0.193
1	7-Mar-2016	14:29:43	0.230
1	7-Mar-2016	14:33:43	0.182
1	7-Mar-2016	14:45:43	0.169
1	7-Mar-2016	14:49:43	0.178
1	7-Mar-2016	14:53:43	0.185
1	7-Mar-2016	15:17:43	0.268
1	7-Mar-2016	15:21:43	0.217
1	7-Mar-2016	15:25:43	0.190
1	7-Mar-2016	15:45:43	0.155
1	7-Mar-2016	15:49:43	0.176
1	7-Mar-2016	15:53:43	0.203
1	7-Mar-2016	16:01:43	0.157
1	7-Mar-2016	16:05:43	0.162
2	8-Mar-2016	08:53:49	0.159
2	8-Mar-2016	08:57:49	0.158
2	8-Mar-2016	09:09:49	0.156
2	8-Mar-2016	09:13:49	0.153
3	9-Mar-2016	10:38:01	0.151

DUST MONITORING SUMMARY

April 2016

This table is a summary of all the time weighted average values exceeding the given threshold for the month of April 2016, for all three dust monitors.

Threshold: 0.15 (mg/m^3)

Monitor	Date	Time	TWA (mg/m^3)
1	8-Apr-2016	09:12:56	0.181
1	8-Apr-2016	09:16:56	0.189
2	8-Apr-2016	09:12:56	0.181
2	8-Apr-2016	09:16:56	0.189
3	11-Apr-2016	13:27:50	0.157

DUST MONITORING SUMMARY

May 2016

This table is a summary of all the time weighted average values exceeding the given threshold for the month of May 2016, for all three dust monitors.

Threshold: 0.15 (mg/m^3)

Monitor	Date	Time	TWA (mg/m^3)
No exceedances were recorded for this month.			

DUST MONITORING SUMMARY

June 2016

This table is a summary of all the time weighted average values exceeding the given threshold for the month of June 2016, for all three dust monitors.

Threshold: 0.15 (mg/m^3)

Monitor	Date	Time	TWA (mg/m^3)
1	23-Jun-2016	20:33:48	0.160
1	23-Jun-2016	20:37:48	0.238
1	23-Jun-2016	20:41:48	0.239
1	23-Jun-2016	21:37:48	1.427
1	23-Jun-2016	21:41:48	1.427
1	23-Jun-2016	21:45:48	1.423

DUST MONITORING SUMMARY

July 2016

This table is a summary of all the time weighted average values exceeding the given threshold for the month of July 2016, for all three dust monitors.

Threshold: 0.15 (mg/m^3)

Monitor	Date	Time	TWA (mg/m^3)
1	19-Jul-2016	10:45:51	0.269
1	19-Jul-2016	10:49:51	0.286
1	19-Jul-2016	10:53:51	0.403
1	19-Jul-2016	10:57:51	0.255
1	19-Jul-2016	11:01:51	0.277
1	19-Jul-2016	11:05:51	0.154
1	19-Jul-2016	12:01:51	0.193
1	19-Jul-2016	12:05:51	0.181
1	19-Jul-2016	12:09:51	0.171
1	19-Jul-2016	13:17:51	0.214
1	19-Jul-2016	13:21:51	0.211
1	19-Jul-2016	13:25:51	0.208
1	19-Jul-2016	14:41:51	0.416
1	19-Jul-2016	14:45:51	0.410
1	19-Jul-2016	14:49:51	0.776
1	19-Jul-2016	14:53:51	0.664

DUST MONITORING

July 2015

shading indicates values over the threshold

Monitor: 1

Threshold: 0.15 (mg/m^3)

Date	Time	Value (mg/m^3)	TWA (mg/m^3)
7-Jul-2015	17:09:59	0.001	0.001
8-Jul-2015	11:26:51	0.012	0.012
13-Jul-2015	14:46:28	0.000	0.000
14-Jul-2015	08:11:18	0.005	0.005
14-Jul-2015	08:15:18	0.005	0.005
14-Jul-2015	08:19:18	0.004	0.004
14-Jul-2015	08:23:18	0.003	0.004
14-Jul-2015	08:27:18	0.005	0.004
14-Jul-2015	08:31:18	0.003	0.004
14-Jul-2015	08:35:18	0.004	0.004
14-Jul-2015	08:39:18	0.004	0.004
14-Jul-2015	08:43:18	0.004	0.004
14-Jul-2015	08:47:18	0.005	0.005
14-Jul-2015	08:51:18	0.005	0.005
14-Jul-2015	08:55:18	0.005	0.005
14-Jul-2015	08:59:18	0.005	0.005
14-Jul-2015	09:03:18	0.006	0.006
14-Jul-2015	09:07:18	0.008	0.006
14-Jul-2015	09:11:18	0.005	0.006
14-Jul-2015	09:15:18	0.005	0.005
14-Jul-2015	09:19:18	0.005	0.005
14-Jul-2015	09:23:18	0.005	0.005
14-Jul-2015	09:27:18	0.005	0.005
14-Jul-2015	09:31:18	0.005	0.005
14-Jul-2015	09:35:18	0.006	0.005
14-Jul-2015	09:39:18	0.005	0.005
14-Jul-2015	09:43:18	0.005	0.005
14-Jul-2015	09:47:18	0.004	0.005
14-Jul-2015	09:51:18	0.005	0.005
14-Jul-2015	09:55:18	0.005	0.005
14-Jul-2015	09:59:18	0.004	0.004
14-Jul-2015	10:03:18	0.004	0.004
14-Jul-2015	10:07:18	0.004	0.004
14-Jul-2015	10:11:18	0.005	0.004
14-Jul-2015	10:15:18	0.004	0.004
14-Jul-2015	10:19:18	0.004	0.004
14-Jul-2015	10:23:18	0.004	0.004
14-Jul-2015	10:27:18	0.003	0.003
14-Jul-2015	10:31:18	0.002	0.003
14-Jul-2015	10:35:18	0.003	0.002
14-Jul-2015	10:39:18	0.002	0.002

DUST MONITORING

July 2015

shading indicates values over the threshold

Monitor: 1

Threshold: 0.15 (mg/m^3)

Date	Time	Value (mg/m^3)	TWA (mg/m^3)
14-Jul-2015	10:43:18	0.002	0.002
14-Jul-2015	10:47:18	0.002	0.002
14-Jul-2015	10:51:18	0.002	0.002
14-Jul-2015	10:55:18	0.002	0.002
14-Jul-2015	10:59:18	0.002	0.002
14-Jul-2015	11:03:18	0.002	0.003
14-Jul-2015	11:07:18	0.005	0.003
14-Jul-2015	11:11:18	0.003	0.003
14-Jul-2015	11:15:18	0.002	0.002
14-Jul-2015	11:19:18	0.001	0.001
14-Jul-2015	11:23:18	0.001	0.001
14-Jul-2015	11:27:18	0.001	0.001
14-Jul-2015	11:31:18	0.001	0.001
14-Jul-2015	11:35:18	0.001	0.001
14-Jul-2015	11:39:18	0.001	0.001
14-Jul-2015	11:43:18	0.001	0.001
14-Jul-2015	11:47:18	0.001	0.001
14-Jul-2015	11:51:18	0.000	0.000
14-Jul-2015	11:55:18	0.000	0.000
15-Jul-2015	08:50:22	0.000	0.000
15-Jul-2015	08:54:22	0.000	0.000
15-Jul-2015	08:58:22	0.000	0.000
15-Jul-2015	09:02:22	0.000	0.000
15-Jul-2015	09:06:22	0.000	0.000
15-Jul-2015	09:10:22	0.000	0.000
15-Jul-2015	09:14:22	0.000	0.000
15-Jul-2015	09:18:22	0.000	0.000
15-Jul-2015	09:22:22	0.000	0.000
15-Jul-2015	09:26:22	0.000	0.000
15-Jul-2015	09:30:22	0.000	0.000
15-Jul-2015	09:34:22	0.000	0.000
15-Jul-2015	09:38:22	0.000	0.000
15-Jul-2015	09:42:22	0.000	0.000
15-Jul-2015	09:46:22	0.000	0.000
15-Jul-2015	09:50:22	0.000	0.000
15-Jul-2015	09:54:22	0.000	0.000
15-Jul-2015	09:58:22	0.000	0.000
15-Jul-2015	10:02:22	0.000	0.000
15-Jul-2015	10:06:22	0.000	0.000
15-Jul-2015	10:10:22	0.000	0.000
15-Jul-2015	10:14:22	0.000	0.000

DUST MONITORING

July 2015

shading indicates values over the threshold

Monitor: 1

Threshold: 0.15 (mg/m^3)

Date	Time	Value (mg/m^3)	TWA (mg/m^3)
15-Jul-2015	10:18:22	0.000	0.000
15-Jul-2015	10:22:22	0.000	0.000
15-Jul-2015	10:26:22	0.000	0.000
15-Jul-2015	10:30:22	0.000	0.000
15-Jul-2015	10:34:22	0.000	0.000
15-Jul-2015	10:38:22	0.000	0.000
15-Jul-2015	10:42:22	0.000	0.000
15-Jul-2015	10:46:22	0.000	0.000
15-Jul-2015	10:50:22	0.000	0.000
15-Jul-2015	10:54:22	0.000	0.001
15-Jul-2015	10:58:22	0.004	0.870
15-Jul-2015	11:02:22	2.606	0.916
15-Jul-2015	11:06:22	0.137	0.915
15-Jul-2015	11:10:22	0.002	0.052
15-Jul-2015	11:14:22	0.017	0.012
15-Jul-2015	11:18:22	0.017	0.018
15-Jul-2015	11:22:22	0.020	0.021
15-Jul-2015	11:26:22	0.026	0.021
15-Jul-2015	11:30:22	0.016	0.021
15-Jul-2015	11:34:22	0.022	0.020
15-Jul-2015	11:38:22	0.023	0.023
15-Jul-2015	11:42:22	0.025	0.028
15-Jul-2015	11:46:22	0.035	0.029
15-Jul-2015	11:50:22	0.027	0.029
15-Jul-2015	11:54:22	0.026	0.026
15-Jul-2015	11:58:22	0.026	0.026
15-Jul-2015	12:02:22	0.025	0.026
15-Jul-2015	12:06:22	0.026	0.025
15-Jul-2015	12:10:22	0.025	0.026
15-Jul-2015	12:14:22	0.026	0.025
15-Jul-2015	12:18:22	0.024	0.026
15-Jul-2015	12:22:22	0.027	0.026
15-Jul-2015	12:26:22	0.027	0.026
15-Jul-2015	12:30:22	0.025	0.024
15-Jul-2015	12:34:22	0.020	0.021
15-Jul-2015	12:38:22	0.017	0.018
15-Jul-2015	12:42:22	0.016	0.018
15-Jul-2015	12:46:22	0.020	0.019
15-Jul-2015	12:50:22	0.022	0.020
15-Jul-2015	12:54:22	0.018	0.018
15-Jul-2015	12:58:22	0.015	0.016

DUST MONITORING

July 2015

shading indicates values over the threshold

Monitor: 1

Threshold: 0.15 (mg/m^3)

Date	Time	Value (mg/m^3)	TWA (mg/m^3)
15-Jul-2015	13:02:22	0.016	0.015
15-Jul-2015	13:06:22	0.014	0.015
15-Jul-2015	13:10:22	0.016	0.015
15-Jul-2015	13:14:22	0.015	0.015
15-Jul-2015	13:18:22	0.015	0.015
15-Jul-2015	13:22:22	0.016	0.017
15-Jul-2015	13:26:22	0.019	0.017
15-Jul-2015	13:30:22	0.017	0.017
15-Jul-2015	13:34:22	0.014	0.016
15-Jul-2015	13:38:22	0.017	0.014
15-Jul-2015	13:42:22	0.010	0.015
15-Jul-2015	13:46:22	0.019	0.016
15-Jul-2015	13:50:22	0.018	0.020
15-Jul-2015	13:54:22	0.022	0.020
15-Jul-2015	13:58:22	0.020	0.020
15-Jul-2015	14:02:22	0.018	0.018
15-Jul-2015	14:06:22	0.017	0.018
15-Jul-2015	14:10:22	0.018	0.018
15-Jul-2015	14:14:22	0.018	0.018
15-Jul-2015	14:18:22	0.019	0.019
15-Jul-2015	14:22:22	0.019	0.019
15-Jul-2015	14:26:22	0.019	0.018
15-Jul-2015	14:30:22	0.017	0.018
15-Jul-2015	14:34:22	0.017	0.017
15-Jul-2015	14:38:22	0.017	0.017
16-Jul-2015	10:33:41	0.006	0.005
16-Jul-2015	10:37:41	0.003	0.005
16-Jul-2015	10:41:41	0.006	0.004
16-Jul-2015	10:45:41	0.002	0.003
16-Jul-2015	10:49:41	0.000	0.001
16-Jul-2015	10:53:41	0.001	0.001
16-Jul-2015	10:57:41	0.001	0.001
16-Jul-2015	11:01:41	0.002	0.003
16-Jul-2015	11:05:41	0.006	0.006
16-Jul-2015	11:09:41	0.009	0.009
16-Jul-2015	11:13:41	0.013	0.013
16-Jul-2015	11:17:41	0.018	0.016
16-Jul-2015	11:21:41	0.016	0.018
16-Jul-2015	11:25:41	0.020	0.019
16-Jul-2015	11:29:41	0.022	0.022
16-Jul-2015	11:33:41	0.024	0.024

DUST MONITORING

July 2015

shading indicates values over the threshold

Monitor: 1

Threshold: 0.15 (mg/m^3)

Date	Time	Value (mg/m^3)	TWA (mg/m^3)
16-Jul-2015	11:37:41	0.026	0.025
16-Jul-2015	11:41:41	0.024	0.028
16-Jul-2015	11:45:41	0.033	0.029
16-Jul-2015	11:49:41	0.031	0.032
16-Jul-2015	11:53:41	0.033	0.032
16-Jul-2015	11:57:41	0.032	0.034
16-Jul-2015	12:01:41	0.036	0.034
16-Jul-2015	12:05:41	0.033	0.032
16-Jul-2015	12:09:41	0.028	0.029
16-Jul-2015	12:13:41	0.027	0.027
16-Jul-2015	12:17:41	0.027	0.027
16-Jul-2015	12:21:41	0.026	0.027
16-Jul-2015	12:25:41	0.027	0.027
16-Jul-2015	12:29:41	0.027	0.028
16-Jul-2015	12:33:41	0.029	0.028
16-Jul-2015	12:37:41	0.029	0.030
16-Jul-2015	12:41:41	0.031	0.030
16-Jul-2015	12:45:41	0.030	0.030
16-Jul-2015	12:49:41	0.030	0.030
16-Jul-2015	12:53:41	0.031	0.031
16-Jul-2015	12:57:41	0.033	0.032
16-Jul-2015	13:01:41	0.032	0.032
16-Jul-2015	13:05:41	0.031	0.031
16-Jul-2015	13:09:41	0.031	0.031
16-Jul-2015	13:13:41	0.031	0.031
16-Jul-2015	13:17:41	0.031	0.032
16-Jul-2015	13:21:41	0.034	0.034
16-Jul-2015	13:25:41	0.036	0.035
16-Jul-2015	13:29:41	0.035	0.035
16-Jul-2015	13:33:41	0.035	0.034
16-Jul-2015	13:37:41	0.033	0.034
16-Jul-2015	13:41:41	0.033	0.046
16-Jul-2015	13:45:41	0.073	0.046
16-Jul-2015	13:49:41	0.031	0.048
16-Jul-2015	13:53:41	0.039	0.034
16-Jul-2015	13:57:41	0.032	0.034
16-Jul-2015	14:01:41	0.030	0.031
16-Jul-2015	14:05:41	0.030	0.031
16-Jul-2015	14:09:41	0.033	0.032
16-Jul-2015	14:13:41	0.032	0.032
16-Jul-2015	14:17:41	0.032	0.032

DUST MONITORING

July 2015

shading indicates values over the threshold

Monitor: 1

Threshold: 0.15 (mg/m^3)

Date	Time	Value (mg/m^3)	TWA (mg/m^3)
16-Jul-2015	14:21:41	0.032	0.032
16-Jul-2015	14:25:41	0.032	0.032
16-Jul-2015	14:29:41	0.031	0.031
16-Jul-2015	14:33:41	0.031	0.031
16-Jul-2015	14:37:41	0.030	0.030
16-Jul-2015	14:41:41	0.030	0.030
16-Jul-2015	14:45:41	0.030	0.030
16-Jul-2015	14:49:41	0.030	0.031
16-Jul-2015	14:53:41	0.033	0.034
16-Jul-2015	14:57:41	0.040	0.039
16-Jul-2015	15:01:41	0.044	0.042
17-Jul-2015	08:11:04	0.001	0.001
17-Jul-2015	08:15:04	0.000	0.000
17-Jul-2015	08:19:04	0.000	0.000
17-Jul-2015	08:23:04	0.000	0.001
17-Jul-2015	08:27:04	0.003	0.002
17-Jul-2015	08:31:04	0.002	0.002
17-Jul-2015	08:35:04	0.000	0.001
17-Jul-2015	08:39:04	0.001	0.003
17-Jul-2015	08:43:04	0.007	0.004
17-Jul-2015	08:47:04	0.003	0.004
17-Jul-2015	08:51:04	0.002	0.002
17-Jul-2015	08:55:04	0.002	0.002
17-Jul-2015	08:59:04	0.003	0.003
17-Jul-2015	09:03:04	0.003	0.003
17-Jul-2015	09:07:04	0.002	0.002
17-Jul-2015	09:11:04	0.001	0.002
17-Jul-2015	09:15:04	0.002	0.001
17-Jul-2015	09:19:04	0.000	0.001
17-Jul-2015	09:23:04	0.000	0.000
17-Jul-2015	09:27:04	0.001	0.001
17-Jul-2015	09:31:04	0.003	0.003
17-Jul-2015	09:35:04	0.005	0.003
17-Jul-2015	09:39:04	0.002	0.003
17-Jul-2015	09:43:04	0.001	0.002
17-Jul-2015	09:47:04	0.002	0.002
17-Jul-2015	09:51:04	0.004	0.005
17-Jul-2015	09:55:04	0.009	0.007
17-Jul-2015	09:59:04	0.009	0.010
17-Jul-2015	10:03:04	0.012	0.016
17-Jul-2015	10:07:04	0.027	0.019

DUST MONITORING

July 2015

shading indicates values over the threshold

Monitor: 1

Threshold: 0.15 (mg/m^3)

Date	Time	Value (mg/m^3)	TWA (mg/m^3)
17-Jul-2015	10:11:04	0.018	0.020
17-Jul-2015	10:15:04	0.016	0.016
17-Jul-2015	10:19:04	0.014	0.015
17-Jul-2015	10:23:04	0.015	0.014
17-Jul-2015	10:27:04	0.014	0.014
17-Jul-2015	10:31:04	0.012	0.013
17-Jul-2015	10:35:04	0.012	0.012
17-Jul-2015	10:39:04	0.012	0.012
17-Jul-2015	10:43:04	0.011	0.011
17-Jul-2015	10:47:04	0.010	0.010
17-Jul-2015	10:51:04	0.009	0.009
17-Jul-2015	10:55:04	0.009	0.008
17-Jul-2015	10:59:04	0.007	0.008
17-Jul-2015	11:03:04	0.007	0.007
17-Jul-2015	11:07:04	0.007	0.007
17-Jul-2015	11:11:04	0.006	0.006
17-Jul-2015	11:15:04	0.004	0.005
17-Jul-2015	11:19:04	0.004	0.004
17-Jul-2015	11:23:04	0.004	0.004
17-Jul-2015	11:27:04	0.003	0.004
17-Jul-2015	11:31:04	0.004	0.004
17-Jul-2015	11:35:04	0.004	0.005
17-Jul-2015	11:39:04	0.007	0.008
17-Jul-2015	11:43:04	0.013	0.014
17-Jul-2015	11:47:04	0.023	0.019
17-Jul-2015	11:51:04	0.022	0.021
17-Jul-2015	11:55:04	0.019	0.015
17-Jul-2015	11:59:04	0.003	0.008
17-Jul-2015	12:03:04	0.002	0.002
17-Jul-2015	12:07:04	0.002	0.002
17-Jul-2015	12:11:04	0.002	0.003
17-Jul-2015	12:15:04	0.006	0.005
17-Jul-2015	12:19:04	0.007	0.006
17-Jul-2015	12:23:04	0.006	0.006
17-Jul-2015	12:27:04	0.006	0.006
17-Jul-2015	12:31:04	0.006	0.007
17-Jul-2015	12:35:04	0.009	0.008
17-Jul-2015	12:39:04	0.009	0.009
17-Jul-2015	12:43:04	0.010	0.008
17-Jul-2015	12:47:04	0.004	0.006
17-Jul-2015	12:51:04	0.003	0.003

DUST MONITORING

July 2015

shading indicates values over the threshold

Monitor: 1

Threshold: 0.15 (mg/m^3)

Date	Time	Value (mg/m^3)	TWA (mg/m^3)
17-Jul-2015	12:55:04	0.002	0.003
17-Jul-2015	12:59:04	0.004	0.004
17-Jul-2015	13:03:04	0.006	0.005
17-Jul-2015	13:07:04	0.006	0.006
17-Jul-2015	13:11:04	0.006	0.006
17-Jul-2015	13:15:04	0.005	0.005
17-Jul-2015	13:19:04	0.004	0.004
17-Jul-2015	13:23:04	0.004	0.005
17-Jul-2015	13:27:04	0.008	0.007
17-Jul-2015	13:31:04	0.009	0.008
17-Jul-2015	13:35:04	0.006	0.006
17-Jul-2015	13:39:04	0.004	0.005
17-Jul-2015	13:43:04	0.004	0.004
17-Jul-2015	13:47:04	0.004	0.004
17-Jul-2015	13:51:04	0.003	0.004
17-Jul-2015	13:55:04	0.004	0.004
17-Jul-2015	13:59:04	0.004	0.004
17-Jul-2015	14:03:04	0.005	0.004
17-Jul-2015	14:07:04	0.004	0.004
17-Jul-2015	14:11:04	0.004	0.005
17-Jul-2015	14:15:04	0.006	0.005
17-Jul-2015	14:19:04	0.006	0.005
17-Jul-2015	14:23:04	0.004	0.005
17-Jul-2015	14:27:04	0.004	0.004
17-Jul-2015	14:31:04	0.003	0.003
17-Jul-2015	14:35:04	0.003	0.003
17-Jul-2015	14:39:04	0.003	0.003
17-Jul-2015	14:43:04	0.003	0.004
17-Jul-2015	14:47:04	0.007	0.004
17-Jul-2015	14:51:04	0.003	0.004
17-Jul-2015	14:55:04	0.003	0.003
17-Jul-2015	14:59:04	0.003	0.003
17-Jul-2015	15:03:04	0.004	0.004
17-Jul-2015	15:07:04	0.004	0.004
17-Jul-2015	15:11:04	0.003	0.004
20-Jul-2015	08:06:59	0.000	0.001
20-Jul-2015	08:10:59	0.001	0.001
20-Jul-2015	08:14:59	0.002	0.002
20-Jul-2015	08:18:59	0.002	0.001
20-Jul-2015	08:22:59	0.000	0.001
20-Jul-2015	08:26:59	0.000	0.000

DUST MONITORING

July 2015

shading indicates values over the threshold

Monitor: 1

Threshold: 0.15 (mg/m^3)

Date	Time	Value (mg/m^3)	TWA (mg/m^3)
20-Jul-2015	08:30:59	0.000	0.001
20-Jul-2015	08:34:59	0.002	0.001
20-Jul-2015	08:38:59	0.001	0.001
20-Jul-2015	08:42:59	0.000	0.001
20-Jul-2015	08:46:59	0.001	0.001
20-Jul-2015	08:50:59	0.002	0.001
20-Jul-2015	08:54:59	0.000	0.012
20-Jul-2015	08:58:59	0.033	0.011
20-Jul-2015	09:02:59	0.000	0.012
20-Jul-2015	09:06:59	0.003	0.001
20-Jul-2015	09:10:59	0.001	0.004
20-Jul-2015	09:14:59	0.007	0.006
20-Jul-2015	09:18:59	0.011	0.009
20-Jul-2015	09:22:59	0.008	0.009
20-Jul-2015	09:26:59	0.008	0.005
20-Jul-2015	09:30:59	0.000	0.003
20-Jul-2015	09:34:59	0.000	0.000
20-Jul-2015	09:38:59	0.000	0.004
20-Jul-2015	09:42:59	0.012	0.004
20-Jul-2015	09:46:59	0.000	0.006
20-Jul-2015	09:50:59	0.006	0.002
20-Jul-2015	09:54:59	0.001	0.003
20-Jul-2015	09:58:59	0.002	0.001
20-Jul-2015	10:02:59	0.000	0.001
20-Jul-2015	10:06:59	0.000	0.000
20-Jul-2015	10:10:59	0.000	0.001
20-Jul-2015	10:14:59	0.003	0.001
20-Jul-2015	10:18:59	0.000	0.001
20-Jul-2015	10:22:59	0.001	0.001
20-Jul-2015	10:26:59	0.002	0.001
20-Jul-2015	10:30:59	0.001	0.001
20-Jul-2015	10:34:59	0.000	0.005
20-Jul-2015	10:38:59	0.014	0.005
20-Jul-2015	10:42:59	0.001	0.005
20-Jul-2015	10:46:59	0.000	0.000
20-Jul-2015	10:50:59	0.000	0.001
20-Jul-2015	10:54:59	0.002	0.003
20-Jul-2015	10:58:59	0.007	0.003
20-Jul-2015	11:02:59	0.001	0.003
20-Jul-2015	11:06:59	0.002	0.001
20-Jul-2015	11:10:59	0.000	0.002

DUST MONITORING

July 2015

shading indicates values over the threshold

Monitor: 1

Threshold: 0.15 (mg/m^3)

Date	Time	Value (mg/m^3)	TWA (mg/m^3)
20-Jul-2015	11:14:59	0.004	0.001
20-Jul-2015	11:18:59	0.000	0.001
20-Jul-2015	11:22:59	0.000	0.000
20-Jul-2015	11:26:59	0.000	0.000
20-Jul-2015	11:30:59	0.000	0.000
20-Jul-2015	11:34:59	0.000	0.000
20-Jul-2015	11:38:59	0.000	0.000
20-Jul-2015	11:42:59	0.000	0.000
20-Jul-2015	11:46:59	0.000	0.000
20-Jul-2015	11:50:59	0.000	0.000
20-Jul-2015	11:54:59	0.000	0.000
20-Jul-2015	11:58:59	0.001	0.000
20-Jul-2015	12:02:59	0.000	0.000
20-Jul-2015	12:06:59	0.000	0.000
21-Jul-2015	07:01:43	0.011	0.012
21-Jul-2015	07:05:43	0.012	0.009
21-Jul-2015	07:09:43	0.004	0.010
21-Jul-2015	07:13:43	0.015	0.008
21-Jul-2015	07:17:43	0.006	0.010
21-Jul-2015	07:21:43	0.010	0.007
21-Jul-2015	07:25:43	0.005	0.007
21-Jul-2015	07:29:43	0.007	0.008
21-Jul-2015	07:33:43	0.011	0.011
21-Jul-2015	07:37:43	0.014	0.013
21-Jul-2015	07:41:43	0.014	0.011
21-Jul-2015	07:45:43	0.006	0.007
21-Jul-2015	07:49:43	0.001	0.009
21-Jul-2015	07:53:43	0.020	0.009
21-Jul-2015	07:57:43	0.005	0.009
21-Jul-2015	08:01:43	0.002	0.003
21-Jul-2015	08:05:43	0.003	0.003
21-Jul-2015	08:09:43	0.003	0.002
21-Jul-2015	08:13:43	0.001	0.003
21-Jul-2015	08:17:43	0.005	0.003
21-Jul-2015	08:21:43	0.002	0.016
21-Jul-2015	08:25:43	0.041	0.014
21-Jul-2015	08:29:43	0.000	0.014
21-Jul-2015	08:33:43	0.001	0.001
21-Jul-2015	08:37:43	0.001	0.001
21-Jul-2015	08:41:43	0.001	0.001
21-Jul-2015	08:45:43	0.000	0.004

DUST MONITORING

July 2015

shading indicates values over the threshold

Monitor: 1

Threshold: 0.15 (mg/m^3)

Date	Time	Value (mg/m^3)	TWA (mg/m^3)
21-Jul-2015	08:49:43	0.012	0.004
21-Jul-2015	08:53:43	0.000	0.004
21-Jul-2015	08:57:43	0.000	0.001
21-Jul-2015	09:01:43	0.002	0.001
21-Jul-2015	09:05:43	0.000	0.002
21-Jul-2015	09:09:43	0.003	0.001
21-Jul-2015	09:13:43	0.000	0.004
21-Jul-2015	09:17:43	0.008	0.004
21-Jul-2015	09:21:43	0.004	0.004
21-Jul-2015	09:25:43	0.000	0.005
21-Jul-2015	09:29:43	0.012	0.004
21-Jul-2015	09:33:43	0.000	0.005
21-Jul-2015	09:37:43	0.003	0.001
21-Jul-2015	09:41:43	0.000	0.004
21-Jul-2015	09:45:43	0.008	0.004
21-Jul-2015	09:49:43	0.003	0.004
21-Jul-2015	09:53:43	0.000	0.004
21-Jul-2015	09:57:43	0.010	0.004
21-Jul-2015	10:01:43	0.003	0.005
21-Jul-2015	10:05:43	0.003	0.003
21-Jul-2015	10:09:43	0.004	0.007
21-Jul-2015	10:13:43	0.013	0.006
21-Jul-2015	10:17:43	0.001	0.005
21-Jul-2015	10:21:43	0.001	0.001
21-Jul-2015	10:25:43	0.002	0.002
21-Jul-2015	10:29:43	0.004	0.002
21-Jul-2015	10:33:43	0.001	0.002
21-Jul-2015	10:37:43	0.001	0.004
21-Jul-2015	10:41:43	0.010	0.008
21-Jul-2015	10:45:43	0.012	0.009
21-Jul-2015	10:49:43	0.005	0.006
21-Jul-2015	10:53:43	0.000	0.002
21-Jul-2015	10:57:43	0.000	0.001
21-Jul-2015	11:01:43	0.002	0.003
21-Jul-2015	11:05:43	0.006	0.004
21-Jul-2015	11:09:43	0.004	0.003
21-Jul-2015	11:13:43	0.000	0.001
21-Jul-2015	11:17:43	0.000	0.000
21-Jul-2015	11:21:43	0.000	0.000
21-Jul-2015	11:25:43	0.000	0.000
21-Jul-2015	11:29:43	0.000	0.000

DUST MONITORING

July 2015

shading indicates values over the threshold

Monitor: 1

Threshold: 0.15 (mg/m^3)

Date	Time	Value (mg/m^3)	TWA (mg/m^3)
21-Jul-2015	11:33:43	0.000	0.002
21-Jul-2015	11:37:43	0.007	0.003
21-Jul-2015	11:41:43	0.002	0.003
21-Jul-2015	11:45:43	0.001	0.002
21-Jul-2015	11:49:43	0.004	0.002
21-Jul-2015	11:53:43	0.000	0.001
21-Jul-2015	11:57:43	0.000	0.000
21-Jul-2015	12:01:43	0.000	0.003
21-Jul-2015	12:05:43	0.010	0.003
21-Jul-2015	12:09:43	0.000	0.003
21-Jul-2015	12:13:43	0.000	0.000
21-Jul-2015	12:17:43	0.001	0.000
21-Jul-2015	12:21:43	0.000	0.000
21-Jul-2015	12:25:43	0.000	0.001
21-Jul-2015	12:29:43	0.003	0.002
21-Jul-2015	12:33:43	0.003	0.002
21-Jul-2015	12:37:43	0.000	0.001
21-Jul-2015	12:41:43	0.000	0.002
21-Jul-2015	12:45:43	0.005	0.002
21-Jul-2015	12:49:43	0.000	0.002
21-Jul-2015	12:53:43	0.000	0.002
21-Jul-2015	12:57:43	0.005	0.002
21-Jul-2015	13:01:43	0.000	0.002
21-Jul-2015	13:05:43	0.000	0.001
21-Jul-2015	13:09:43	0.002	0.001
21-Jul-2015	13:13:43	0.000	0.001
21-Jul-2015	13:17:43	0.000	0.000
21-Jul-2015	13:21:43	0.000	0.000
21-Jul-2015	13:25:43	0.000	0.001
21-Jul-2015	13:29:43	0.002	0.001
21-Jul-2015	13:33:43	0.000	0.001
21-Jul-2015	13:37:43	0.000	0.000
21-Jul-2015	13:41:43	0.000	0.000
21-Jul-2015	13:45:43	0.001	0.002
21-Jul-2015	13:49:43	0.006	0.002
21-Jul-2015	13:53:43	0.000	0.002
21-Jul-2015	13:57:43	0.000	0.000
21-Jul-2015	14:01:43	0.000	0.000
21-Jul-2015	14:05:43	0.000	0.000
21-Jul-2015	14:09:43	0.000	0.000
21-Jul-2015	14:13:43	0.000	0.001

DUST MONITORING

July 2015

shading indicates values over the threshold

Monitor: 1

Threshold: 0.15 (mg/m^3)

Date	Time	Value (mg/m^3)	TWA (mg/m^3)
21-Jul-2015	14:17:43	0.002	0.005
21-Jul-2015	14:21:43	0.014	0.012
21-Jul-2015	14:25:43	0.019	0.011
21-Jul-2015	14:29:43	0.000	0.006
21-Jul-2015	14:33:43	0.000	0.000

DUST MONITORING

July 2015

shading indicates values over the threshold

Monitor: 2

Threshold: 0.15 (mg/m^3)

Date	Time	Value (mg/m^3)	TWA (mg/m^3)
8-Jul-2015	11:27:12	0.092	0.092
13-Jul-2015	14:48:59	0.054	0.054
14-Jul-2015	08:13:06	0.022	0.017
14-Jul-2015	08:17:06	0.012	0.015
14-Jul-2015	08:21:06	0.012	0.012
14-Jul-2015	08:25:06	0.013	0.013
14-Jul-2015	08:29:06	0.013	0.013
14-Jul-2015	08:33:06	0.013	0.014
14-Jul-2015	08:37:06	0.015	0.014
14-Jul-2015	08:41:06	0.015	0.015
14-Jul-2015	08:45:06	0.016	0.016
14-Jul-2015	08:49:06	0.017	0.017
14-Jul-2015	08:53:06	0.019	0.019
14-Jul-2015	08:57:06	0.020	0.020
14-Jul-2015	09:01:06	0.020	0.020
14-Jul-2015	09:05:06	0.021	0.021
14-Jul-2015	09:09:06	0.022	0.021
14-Jul-2015	09:13:06	0.021	0.022
14-Jul-2015	09:17:06	0.022	0.022
14-Jul-2015	09:21:06	0.024	0.023
14-Jul-2015	09:25:06	0.023	0.023
14-Jul-2015	09:29:06	0.023	0.022
14-Jul-2015	09:33:06	0.020	0.021
14-Jul-2015	09:37:06	0.020	0.020
14-Jul-2015	09:41:06	0.021	0.021
14-Jul-2015	09:45:06	0.021	0.021
14-Jul-2015	09:49:06	0.020	0.022
14-Jul-2015	09:53:06	0.024	0.023
14-Jul-2015	09:57:06	0.025	0.024
14-Jul-2015	10:01:06	0.023	0.024
14-Jul-2015	10:05:06	0.024	0.023
14-Jul-2015	10:09:06	0.022	0.023
14-Jul-2015	10:13:06	0.024	0.023
14-Jul-2015	10:17:06	0.022	0.023
14-Jul-2015	10:21:06	0.022	0.022
14-Jul-2015	10:25:06	0.022	0.022
14-Jul-2015	10:29:06	0.021	0.021
14-Jul-2015	10:33:06	0.021	0.021
14-Jul-2015	10:37:06	0.021	0.021
14-Jul-2015	10:41:06	0.020	0.021
14-Jul-2015	10:45:06	0.021	0.021

DUST MONITORING

July 2015

shading indicates values over the threshold

Monitor: **2**

Threshold: **0.15 (mg/m^3)**

Date	Time	Value (mg/m^3)	TWA (mg/m^3)
14-Jul-2015	10:49:06	0.021	0.021
14-Jul-2015	10:53:06	0.021	0.020
14-Jul-2015	10:57:06	0.019	0.020
14-Jul-2015	11:01:06	0.020	0.020
14-Jul-2015	11:05:06	0.021	0.020
14-Jul-2015	11:09:06	0.019	0.021
14-Jul-2015	11:13:06	0.022	0.020
14-Jul-2015	11:17:06	0.019	0.020
14-Jul-2015	11:21:06	0.020	0.019
14-Jul-2015	11:25:06	0.019	0.019
14-Jul-2015	11:29:06	0.019	0.019
14-Jul-2015	11:33:06	0.019	0.019
14-Jul-2015	11:37:06	0.019	0.018
14-Jul-2015	11:41:06	0.017	0.018
14-Jul-2015	11:45:06	0.017	0.017
14-Jul-2015	11:49:06	0.017	0.017
14-Jul-2015	11:53:06	0.016	0.016
14-Jul-2015	11:57:06	0.016	0.016
14-Jul-2015	12:01:06	0.016	0.016
14-Jul-2015	12:05:06	0.016	0.016
14-Jul-2015	12:09:06	0.016	0.016
14-Jul-2015	12:13:06	0.016	0.016
14-Jul-2015	12:17:06	0.016	0.016
14-Jul-2015	12:21:06	0.016	0.015
14-Jul-2015	12:25:06	0.013	0.015
14-Jul-2015	12:29:06	0.015	0.014
14-Jul-2015	12:33:06	0.015	0.015
14-Jul-2015	12:37:06	0.015	0.015
14-Jul-2015	12:41:06	0.016	0.016
14-Jul-2015	12:45:06	0.016	0.016
14-Jul-2015	12:49:06	0.016	0.016
14-Jul-2015	12:53:06	0.016	0.015
14-Jul-2015	12:57:06	0.014	0.015
14-Jul-2015	13:01:06	0.015	0.016
14-Jul-2015	13:05:06	0.018	0.017
14-Jul-2015	13:09:06	0.018	0.017
14-Jul-2015	13:13:06	0.016	0.017
14-Jul-2015	13:17:06	0.017	0.017
14-Jul-2015	13:21:06	0.018	0.017
14-Jul-2015	13:25:06	0.017	0.030
14-Jul-2015	13:29:06	0.054	0.029

DUST MONITORING

July 2015

shading indicates values over the threshold

Monitor: 2

Threshold: 0.15 (mg/m^3)

Date	Time	Value (mg/m^3)	TWA (mg/m^3)
14-Jul-2015	13:33:06	0.017	0.030
14-Jul-2015	13:37:06	0.018	0.022
14-Jul-2015	13:41:06	0.032	0.023
14-Jul-2015	13:45:06	0.020	0.026
14-Jul-2015	13:49:06	0.026	0.025
14-Jul-2015	13:53:06	0.030	0.025
14-Jul-2015	13:57:06	0.020	0.028
14-Jul-2015	14:01:06	0.033	0.025
14-Jul-2015	14:05:06	0.022	0.026
14-Jul-2015	14:09:06	0.022	0.022
14-Jul-2015	14:13:06	0.023	0.022
14-Jul-2015	14:17:06	0.021	0.026
14-Jul-2015	14:21:06	0.035	0.028
14-Jul-2015	14:25:06	0.027	0.031
15-Jul-2015	08:53:36	0.002	0.002
15-Jul-2015	08:57:36	0.002	0.002
15-Jul-2015	09:01:36	0.002	0.002
15-Jul-2015	09:05:36	0.002	0.002
15-Jul-2015	09:09:36	0.002	0.002
15-Jul-2015	09:13:36	0.002	0.002
15-Jul-2015	09:17:36	0.002	0.002
15-Jul-2015	09:21:36	0.003	0.003
15-Jul-2015	09:25:36	0.003	0.003
15-Jul-2015	09:29:36	0.003	0.003
15-Jul-2015	09:33:36	0.003	0.003
15-Jul-2015	09:37:36	0.003	0.003
15-Jul-2015	09:41:36	0.004	0.004
15-Jul-2015	09:45:36	0.004	0.004
15-Jul-2015	09:49:36	0.004	0.004
15-Jul-2015	09:53:36	0.005	0.004
15-Jul-2015	09:57:36	0.004	0.005
15-Jul-2015	10:01:36	0.005	0.005
15-Jul-2015	10:05:36	0.005	0.005
15-Jul-2015	10:09:36	0.006	0.006
15-Jul-2015	10:13:36	0.006	0.006
15-Jul-2015	10:17:36	0.007	0.007
15-Jul-2015	10:21:36	0.007	0.007
15-Jul-2015	10:25:36	0.007	0.007
15-Jul-2015	10:29:36	0.007	0.007
15-Jul-2015	10:33:36	0.007	0.007
15-Jul-2015	10:37:36	0.007	0.007

DUST MONITORING

July 2015

shading indicates values over the threshold

Monitor: 2

Threshold: 0.15 (mg/m^3)

Date	Time	Value (mg/m^3)	TWA (mg/m^3)
15-Jul-2015	10:41:36	0.008	0.008
15-Jul-2015	10:45:36	0.009	0.009
15-Jul-2015	10:49:36	0.010	0.010
15-Jul-2015	10:53:36	0.010	0.011
15-Jul-2015	10:57:36	0.013	0.012
15-Jul-2015	11:01:36	0.012	0.013
15-Jul-2015	11:05:36	0.014	0.013
15-Jul-2015	11:09:36	0.014	0.014
15-Jul-2015	11:13:36	0.014	0.014
15-Jul-2015	11:17:36	0.015	0.015
15-Jul-2015	11:21:36	0.016	0.015
15-Jul-2015	11:25:36	0.015	0.016
16-Jul-2015	10:32:45	0.009	0.005
16-Jul-2015	10:36:45	0.000	0.003
16-Jul-2015	10:40:45	0.000	0.000
16-Jul-2015	10:44:45	0.000	0.000
16-Jul-2015	10:48:45	0.000	0.000
16-Jul-2015	10:52:45	0.000	0.000
16-Jul-2015	10:56:45	0.000	0.000
16-Jul-2015	11:00:45	0.000	0.000
16-Jul-2015	11:04:45	0.000	0.000
16-Jul-2015	11:08:45	0.000	0.000
16-Jul-2015	11:12:45	0.000	0.000
16-Jul-2015	11:16:45	0.000	0.000
16-Jul-2015	11:20:45	0.000	0.000
16-Jul-2015	11:24:45	0.000	0.001
16-Jul-2015	11:28:45	0.002	0.001
16-Jul-2015	11:32:45	0.000	0.001
16-Jul-2015	11:36:45	0.000	0.000
16-Jul-2015	11:40:45	0.000	0.000
16-Jul-2015	11:44:45	0.000	0.000
16-Jul-2015	11:48:45	0.000	0.000
16-Jul-2015	11:52:45	0.000	0.000
16-Jul-2015	11:56:45	0.000	0.000
16-Jul-2015	12:00:45	0.000	0.000
16-Jul-2015	12:04:45	0.000	0.000
16-Jul-2015	12:08:45	0.000	0.000
16-Jul-2015	12:12:45	0.000	0.000
16-Jul-2015	12:16:45	0.000	0.000
16-Jul-2015	12:20:45	0.000	0.000
16-Jul-2015	12:24:45	0.000	0.000

DUST MONITORING

July 2015

shading indicates values over the threshold

Monitor: 2

Threshold: 0.15 (mg/m^3)

Date	Time	Value (mg/m^3)	TWA (mg/m^3)
16-Jul-2015	12:28:45	0.000	0.000
16-Jul-2015	12:32:45	0.000	0.000
16-Jul-2015	12:36:45	0.000	0.000
16-Jul-2015	12:40:45	0.000	0.000
16-Jul-2015	12:44:45	0.000	0.000
16-Jul-2015	12:48:45	0.000	0.000
16-Jul-2015	12:52:45	0.000	0.000
16-Jul-2015	12:56:45	0.000	0.000
16-Jul-2015	13:00:45	0.000	0.001
16-Jul-2015	13:04:45	0.002	0.001
16-Jul-2015	13:08:45	0.000	0.001
16-Jul-2015	13:12:45	0.000	0.000
16-Jul-2015	13:16:45	0.000	0.000
16-Jul-2015	13:20:45	0.000	0.000
16-Jul-2015	13:24:45	0.000	0.000
16-Jul-2015	13:28:45	0.000	0.002
16-Jul-2015	13:32:45	0.005	0.002
16-Jul-2015	13:36:45	0.000	0.002
16-Jul-2015	13:40:45	0.000	0.000
16-Jul-2015	13:44:45	0.000	0.000
16-Jul-2015	13:48:45	0.000	0.000
16-Jul-2015	13:52:45	0.000	0.000
16-Jul-2015	13:56:45	0.000	0.000
16-Jul-2015	14:00:45	0.000	0.000
16-Jul-2015	14:04:45	0.001	0.000
16-Jul-2015	14:08:45	0.000	0.000
16-Jul-2015	14:12:45	0.000	0.000
16-Jul-2015	14:16:45	0.000	0.000
16-Jul-2015	14:20:45	0.000	0.000
16-Jul-2015	14:24:45	0.000	0.000
16-Jul-2015	14:28:45	0.000	0.000
16-Jul-2015	14:32:45	0.000	0.000
16-Jul-2015	14:36:45	0.000	0.000
16-Jul-2015	14:40:45	0.000	0.000
16-Jul-2015	14:44:45	0.000	0.000
16-Jul-2015	14:48:45	0.001	0.000
16-Jul-2015	14:52:45	0.000	0.000
16-Jul-2015	14:56:45	0.000	0.000
16-Jul-2015	15:00:45	0.000	0.000
17-Jul-2015	08:12:10	0.000	0.001
17-Jul-2015	08:16:10	0.001	0.001

DUST MONITORING

July 2015

shading indicates values over the threshold

Monitor: 2

Threshold: 0.15 (mg/m^3)

Date	Time	Value (mg/m^3)	TWA (mg/m^3)
17-Jul-2015	08:20:10	0.002	0.001
17-Jul-2015	08:24:10	0.000	0.001
17-Jul-2015	08:28:10	0.000	0.000
17-Jul-2015	08:32:10	0.000	0.000
17-Jul-2015	08:36:10	0.000	0.000
17-Jul-2015	08:40:10	0.000	0.000
17-Jul-2015	08:44:10	0.000	0.000
17-Jul-2015	08:48:10	0.000	0.000
17-Jul-2015	08:52:10	0.000	0.000
17-Jul-2015	08:56:10	0.000	0.000
17-Jul-2015	09:00:10	0.000	0.000
17-Jul-2015	09:04:10	0.000	0.000
17-Jul-2015	09:08:10	0.000	0.000
17-Jul-2015	09:12:10	0.000	0.000
17-Jul-2015	09:16:10	0.000	0.000
17-Jul-2015	09:20:10	0.001	0.000
17-Jul-2015	09:24:10	0.000	0.000
17-Jul-2015	09:28:10	0.000	0.000
17-Jul-2015	09:32:10	0.000	0.000
17-Jul-2015	09:36:10	0.000	0.000
17-Jul-2015	09:40:10	0.000	0.000
17-Jul-2015	09:44:10	0.000	0.000
17-Jul-2015	09:48:10	0.000	0.000
17-Jul-2015	09:52:10	0.000	0.000
17-Jul-2015	09:56:10	0.000	0.000
17-Jul-2015	10:00:10	0.000	0.000
17-Jul-2015	10:04:10	0.000	0.001
17-Jul-2015	10:08:10	0.002	0.001
17-Jul-2015	10:12:10	0.000	0.001
17-Jul-2015	10:16:10	0.000	0.000
17-Jul-2015	10:20:10	0.000	0.000
17-Jul-2015	10:24:10	0.000	0.000
17-Jul-2015	10:28:10	0.000	0.000
17-Jul-2015	10:32:10	0.000	0.000
17-Jul-2015	10:36:10	0.000	0.000
17-Jul-2015	10:40:10	0.000	0.000
17-Jul-2015	10:44:10	0.000	0.000
17-Jul-2015	10:48:10	0.000	0.000
17-Jul-2015	10:52:10	0.000	0.000
17-Jul-2015	10:56:10	0.000	0.000
17-Jul-2015	11:00:10	0.000	0.000

DUST MONITORING

July 2015

shading indicates values over the threshold

Monitor: 2

Threshold: 0.15 (mg/m^3)

Date	Time	Value (mg/m^3)	TWA (mg/m^3)
17-Jul-2015	11:04:10	0.000	0.000
17-Jul-2015	11:08:10	0.000	0.000
17-Jul-2015	11:12:10	0.000	0.000
17-Jul-2015	11:16:10	0.000	0.000
17-Jul-2015	11:20:10	0.000	0.000
17-Jul-2015	11:24:10	0.000	0.000
17-Jul-2015	11:28:10	0.000	0.000
17-Jul-2015	11:32:10	0.000	0.000
17-Jul-2015	11:36:10	0.000	0.000
17-Jul-2015	11:40:10	0.000	0.000
17-Jul-2015	11:44:10	0.000	0.000
17-Jul-2015	11:48:10	0.000	0.000
17-Jul-2015	11:52:10	0.000	0.000
17-Jul-2015	11:56:10	0.000	0.000
17-Jul-2015	12:00:10	0.000	0.000
17-Jul-2015	12:04:10	0.000	0.000
17-Jul-2015	12:08:10	0.000	0.000
17-Jul-2015	12:12:10	0.000	0.000
17-Jul-2015	12:16:10	0.000	0.000
17-Jul-2015	12:20:10	0.000	0.000
17-Jul-2015	12:24:10	0.000	0.000
17-Jul-2015	12:28:10	0.000	0.000
17-Jul-2015	12:32:10	0.000	0.000
17-Jul-2015	12:36:10	0.000	0.000
17-Jul-2015	12:40:10	0.000	0.000
17-Jul-2015	12:44:10	0.000	0.000
17-Jul-2015	12:48:10	0.000	0.000
17-Jul-2015	12:52:10	0.000	0.000
17-Jul-2015	12:56:10	0.000	0.000
17-Jul-2015	13:00:10	0.000	0.000
17-Jul-2015	13:04:10	0.000	0.000
17-Jul-2015	13:08:10	0.000	0.000
17-Jul-2015	13:12:10	0.000	0.000
17-Jul-2015	13:16:10	0.000	0.000
17-Jul-2015	13:20:10	0.000	0.000
17-Jul-2015	13:24:10	0.000	0.000
17-Jul-2015	13:28:10	0.000	0.000
17-Jul-2015	13:32:10	0.000	0.000
17-Jul-2015	13:36:10	0.000	0.000
17-Jul-2015	13:40:10	0.000	0.000
17-Jul-2015	13:44:10	0.000	0.000

DUST MONITORING

July 2015

shading indicates values over the threshold

Monitor: 2

Threshold: 0.15 (mg/m^3)

Date	Time	Value (mg/m^3)	TWA (mg/m^3)
17-Jul-2015	13:48:10	0.000	0.000
17-Jul-2015	13:52:10	0.000	0.000
17-Jul-2015	13:56:10	0.000	0.000
17-Jul-2015	14:00:10	0.000	0.000
17-Jul-2015	14:04:10	0.000	0.000
17-Jul-2015	14:08:10	0.000	0.000
17-Jul-2015	14:12:10	0.000	0.000
17-Jul-2015	14:16:10	0.000	0.000
17-Jul-2015	14:20:10	0.000	0.000
17-Jul-2015	14:24:10	0.000	0.000
17-Jul-2015	14:28:10	0.000	0.000
17-Jul-2015	14:32:10	0.000	0.000
17-Jul-2015	14:36:10	0.000	0.000
17-Jul-2015	14:40:10	0.000	0.000
17-Jul-2015	14:44:10	0.000	0.000
17-Jul-2015	14:48:10	0.000	0.000
17-Jul-2015	14:52:10	0.001	0.001
17-Jul-2015	14:56:10	0.001	0.002
17-Jul-2015	15:00:10	0.003	0.002
17-Jul-2015	15:04:10	0.001	0.002
17-Jul-2015	15:08:10	0.001	0.001
17-Jul-2015	15:12:10	0.002	0.002
20-Jul-2015	10:02:30	0.001	0.001
20-Jul-2015	10:06:30	0.000	0.000
20-Jul-2015	10:10:30	0.000	0.000
20-Jul-2015	10:14:30	0.000	0.001
20-Jul-2015	10:18:30	0.004	0.003
20-Jul-2015	10:22:30	0.004	0.004
20-Jul-2015	10:26:30	0.003	0.002
20-Jul-2015	10:30:30	0.000	0.002
20-Jul-2015	10:34:30	0.004	0.002
20-Jul-2015	10:38:30	0.001	0.002
20-Jul-2015	10:42:30	0.000	0.001
20-Jul-2015	10:46:30	0.002	0.002
20-Jul-2015	10:50:30	0.003	0.003
20-Jul-2015	10:54:30	0.003	0.003
20-Jul-2015	10:58:30	0.002	0.002
20-Jul-2015	11:02:30	0.001	0.001
20-Jul-2015	11:06:30	0.001	0.004
20-Jul-2015	11:10:30	0.010	0.004
20-Jul-2015	11:14:30	0.001	0.005

DUST MONITORING

July 2015

shading indicates values over the threshold

Monitor: 2

Threshold: 0.15 (mg/m^3)

Date	Time	Value (mg/m^3)	TWA (mg/m^3)
20-Jul-2015	11:18:30	0.004	0.003
21-Jul-2015	07:03:37	0.000	0.000
21-Jul-2015	07:07:37	0.000	0.001
21-Jul-2015	07:11:37	0.002	0.001
21-Jul-2015	07:15:37	0.000	0.001
21-Jul-2015	07:19:37	0.000	0.000
21-Jul-2015	07:23:37	0.000	0.000
21-Jul-2015	07:27:37	0.000	0.001
21-Jul-2015	07:31:37	0.004	0.001
21-Jul-2015	07:35:37	0.000	0.001
21-Jul-2015	07:39:37	0.000	0.000
21-Jul-2015	07:43:37	0.000	0.000
21-Jul-2015	07:47:37	0.000	0.004
21-Jul-2015	07:51:37	0.012	0.004
21-Jul-2015	07:55:37	0.000	0.004
21-Jul-2015	07:59:37	0.000	0.000
21-Jul-2015	08:03:37	0.000	0.004
21-Jul-2015	08:07:37	0.012	0.004
21-Jul-2015	08:11:37	0.000	0.004
21-Jul-2015	08:15:37	0.000	0.000
21-Jul-2015	08:19:37	0.000	0.000
21-Jul-2015	08:23:37	0.000	0.000
21-Jul-2015	08:27:37	0.000	0.000
21-Jul-2015	08:31:37	0.000	0.000
21-Jul-2015	08:35:37	0.000	0.000
21-Jul-2015	08:39:37	0.000	0.000
21-Jul-2015	08:43:37	0.000	0.000
21-Jul-2015	08:47:37	0.000	0.000
21-Jul-2015	08:51:37	0.000	0.000
21-Jul-2015	08:55:37	0.000	0.000
21-Jul-2015	08:59:37	0.000	0.000
21-Jul-2015	09:03:37	0.000	0.000
21-Jul-2015	09:07:37	0.000	0.000
21-Jul-2015	09:11:37	0.000	0.000
21-Jul-2015	09:15:37	0.000	0.002
21-Jul-2015	09:19:37	0.007	0.003
21-Jul-2015	09:23:37	0.001	0.003
21-Jul-2015	09:27:37	0.000	0.001
21-Jul-2015	09:31:37	0.002	0.001
21-Jul-2015	09:35:37	0.001	0.001
21-Jul-2015	09:39:37	0.000	0.001

DUST MONITORING

July 2015

shading indicates values over the threshold

Monitor: 2

Threshold: 0.15 (mg/m^3)

Date	Time	Value (mg/m^3)	TWA (mg/m^3)
21-Jul-2015	09:43:37	0.001	0.003
21-Jul-2015	09:47:37	0.008	0.003
21-Jul-2015	09:51:37	0.001	0.003
21-Jul-2015	09:55:37	0.000	0.001
21-Jul-2015	09:59:37	0.002	0.001
21-Jul-2015	10:03:37	0.000	0.001
21-Jul-2015	10:07:37	0.000	0.001
21-Jul-2015	10:11:37	0.002	0.002
21-Jul-2015	10:15:37	0.003	0.003
21-Jul-2015	10:19:37	0.003	0.003
21-Jul-2015	10:23:37	0.002	0.002
21-Jul-2015	10:27:37	0.001	0.001
21-Jul-2015	10:31:37	0.000	0.003
21-Jul-2015	10:35:37	0.007	0.013
21-Jul-2015	10:39:37	0.032	0.014
21-Jul-2015	10:43:37	0.004	0.013
21-Jul-2015	10:47:37	0.003	0.002
21-Jul-2015	10:51:37	0.000	0.001
21-Jul-2015	10:55:37	0.001	0.000
21-Jul-2015	10:59:37	0.000	0.010
21-Jul-2015	11:03:37	0.029	0.010
21-Jul-2015	11:07:37	0.000	0.010
21-Jul-2015	11:11:37	0.000	0.000
21-Jul-2015	11:15:37	0.000	0.000
21-Jul-2015	11:19:37	0.000	0.000
21-Jul-2015	11:23:37	0.001	0.000
21-Jul-2015	11:27:37	0.000	0.002
21-Jul-2015	11:31:37	0.005	0.003
21-Jul-2015	11:35:37	0.005	0.003
21-Jul-2015	11:39:37	0.000	0.002
21-Jul-2015	11:43:37	0.000	0.001
21-Jul-2015	11:47:37	0.002	0.006
21-Jul-2015	11:51:37	0.016	0.006
21-Jul-2015	11:55:37	0.001	0.006
21-Jul-2015	11:59:37	0.002	0.003
21-Jul-2015	12:03:37	0.006	0.006
21-Jul-2015	12:07:37	0.011	0.006
21-Jul-2015	12:11:37	0.000	0.005
21-Jul-2015	12:15:37	0.004	0.001
21-Jul-2015	12:19:37	0.000	0.001
21-Jul-2015	12:23:37	0.000	0.000

DUST MONITORING

July 2015

shading indicates values over the threshold

Monitor: 2

Threshold: 0.15 (mg/m^3)

Date	Time	Value (mg/m^3)	TWA (mg/m^3)
21-Jul-2015	12:27:37	0.000	0.000
21-Jul-2015	12:31:37	0.000	0.002
21-Jul-2015	12:35:37	0.006	0.002
21-Jul-2015	12:39:37	0.000	0.002
21-Jul-2015	12:43:37	0.001	0.000
21-Jul-2015	12:47:37	0.000	0.003
21-Jul-2015	12:51:37	0.007	0.016
21-Jul-2015	12:55:37	0.041	0.016
21-Jul-2015	12:59:37	0.000	0.014
21-Jul-2015	13:03:37	0.000	0.000
21-Jul-2015	13:07:37	0.000	0.000
21-Jul-2015	13:11:37	0.000	0.002
21-Jul-2015	13:15:37	0.006	0.002
21-Jul-2015	13:19:37	0.000	0.003
21-Jul-2015	13:23:37	0.003	0.001
21-Jul-2015	13:27:37	0.001	0.001
21-Jul-2015	13:31:37	0.000	0.000
21-Jul-2015	13:35:37	0.000	0.000
21-Jul-2015	13:39:37	0.000	0.000
21-Jul-2015	13:43:37	0.001	0.023
21-Jul-2015	13:47:37	0.069	0.025
21-Jul-2015	13:51:37	0.004	0.024
21-Jul-2015	13:55:37	0.000	0.023
21-Jul-2015	13:59:37	0.065	0.023
21-Jul-2015	14:03:37	0.005	0.027
21-Jul-2015	14:07:37	0.011	0.078
21-Jul-2015	14:11:37	0.217	0.077
21-Jul-2015	14:15:37	0.002	0.084
21-Jul-2015	14:19:37	0.032	0.020
21-Jul-2015	14:23:37	0.026	0.020
21-Jul-2015	14:27:37	0.002	0.010
21-Jul-2015	14:31:37	0.003	0.003
22-Jul-2015	07:24:32	0.000	0.000
22-Jul-2015	07:28:32	0.000	0.006
22-Jul-2015	07:32:32	0.019	0.007
22-Jul-2015	07:36:32	0.001	0.008
22-Jul-2015	07:40:32	0.005	0.011
22-Jul-2015	07:44:32	0.026	0.010
22-Jul-2015	07:48:32	0.000	0.009
22-Jul-2015	07:52:32	0.000	0.000
22-Jul-2015	07:56:32	0.000	0.000

DUST MONITORING

July 2015

shading indicates values over the threshold

Monitor: 2

Threshold: 0.15 (mg/m^3)

Date	Time	Value (mg/m^3)	TWA (mg/m^3)
22-Jul-2015	08:00:32	0.001	0.004
22-Jul-2015	08:04:32	0.010	0.004
22-Jul-2015	08:08:32	0.000	0.003
22-Jul-2015	08:12:32	0.000	0.000
22-Jul-2015	08:16:32	0.000	0.000
22-Jul-2015	08:20:32	0.000	0.000
22-Jul-2015	08:24:32	0.000	0.000
22-Jul-2015	08:28:32	0.000	0.000
22-Jul-2015	08:32:32	0.000	0.000
22-Jul-2015	08:36:32	0.000	0.000
22-Jul-2015	08:40:32	0.000	0.000
22-Jul-2015	08:44:32	0.000	0.009
22-Jul-2015	08:48:32	0.028	0.009
22-Jul-2015	08:52:32	0.000	0.009
22-Jul-2015	08:56:32	0.000	0.000
22-Jul-2015	09:00:32	0.000	0.000
22-Jul-2015	09:04:32	0.000	0.000
22-Jul-2015	09:08:32	0.000	0.000
22-Jul-2015	09:12:32	0.001	0.000
22-Jul-2015	09:16:32	0.000	0.000
22-Jul-2015	09:20:32	0.000	0.006
22-Jul-2015	09:24:32	0.017	0.006
22-Jul-2015	09:28:32	0.000	0.006
22-Jul-2015	09:32:32	0.000	0.002
22-Jul-2015	09:36:32	0.007	0.003
22-Jul-2015	09:40:32	0.003	0.004
22-Jul-2015	09:44:32	0.001	0.005
22-Jul-2015	09:48:32	0.010	0.004
22-Jul-2015	09:52:32	0.000	0.003
22-Jul-2015	09:56:32	0.000	0.001
22-Jul-2015	10:00:32	0.002	0.001
22-Jul-2015	10:04:32	0.000	0.001
22-Jul-2015	10:08:32	0.001	0.001
22-Jul-2015	10:12:32	0.002	0.002
22-Jul-2015	10:16:32	0.003	0.002
22-Jul-2015	10:20:32	0.001	0.001
22-Jul-2015	10:24:32	0.000	0.000
22-Jul-2015	10:28:32	0.000	0.000
22-Jul-2015	10:32:32	0.000	0.000
22-Jul-2015	10:36:32	0.000	0.000
22-Jul-2015	10:40:32	0.000	0.000

DUST MONITORING

July 2015

shading indicates values over the threshold

Monitor: 2

Threshold: 0.15 (mg/m^3)

Date	Time	Value (mg/m^3)	TWA (mg/m^3)
22-Jul-2015	10:44:32	0.000	0.000
22-Jul-2015	10:48:32	0.000	0.000
22-Jul-2015	10:52:32	0.000	0.000
22-Jul-2015	10:56:32	0.000	0.000
22-Jul-2015	11:00:32	0.000	0.037
22-Jul-2015	11:04:32	0.112	0.042
22-Jul-2015	11:08:32	0.015	0.042
22-Jul-2015	11:12:32	0.000	0.018
22-Jul-2015	11:16:32	0.038	0.013
22-Jul-2015	11:20:32	0.001	0.025
22-Jul-2015	11:24:32	0.036	0.012
22-Jul-2015	11:28:32	0.000	0.012
22-Jul-2015	11:32:32	0.000	0.009
22-Jul-2015	11:36:32	0.028	0.009
22-Jul-2015	11:40:32	0.000	0.144
22-Jul-2015	11:44:32	0.405	0.224
22-Jul-2015	11:48:32	0.267	0.235
22-Jul-2015	11:52:32	0.032	0.103
22-Jul-2015	11:56:32	0.009	0.014
22-Jul-2015	12:00:32	0.002	0.005
22-Jul-2015	12:04:32	0.004	0.003
22-Jul-2015	12:08:32	0.003	0.006
22-Jul-2015	12:12:32	0.011	0.005
22-Jul-2015	12:16:32	0.000	0.008
22-Jul-2015	12:20:32	0.013	0.004
22-Jul-2015	12:24:32	0.000	0.004
22-Jul-2015	12:28:32	0.000	0.000
22-Jul-2015	12:32:32	0.000	0.001
22-Jul-2015	12:36:32	0.004	0.002
22-Jul-2015	12:40:32	0.003	0.004
22-Jul-2015	12:44:32	0.004	0.005
22-Jul-2015	12:48:32	0.007	0.007
22-Jul-2015	12:52:32	0.011	0.008
22-Jul-2015	12:56:32	0.005	0.595
22-Jul-2015	13:00:32	1.768	1.202
22-Jul-2015	13:04:32	1.833	1.804
22-Jul-2015	13:08:32	1.811	1.805
22-Jul-2015	13:12:32	1.770	1.754
22-Jul-2015	13:16:32	1.680	1.319
22-Jul-2015	13:20:32	0.507	0.729
22-Jul-2015	13:24:32	0.000	0.169

DUST MONITORING

July 2015

shading indicates values over the threshold

Monitor: **2**

Threshold: **0.15 (mg/m^3)**

Date	Time	Value (mg/m^3)	TWA (mg/m^3)
22-Jul-2015	13:28:32	0.000	0.001
22-Jul-2015	13:32:32	0.003	0.001
22-Jul-2015	13:36:32	0.001	0.012
22-Jul-2015	13:40:32	0.032	0.011
22-Jul-2015	13:44:32	0.000	0.011
22-Jul-2015	13:48:32	0.000	0.000
22-Jul-2015	13:52:32	0.000	0.039
22-Jul-2015	13:56:32	0.118	0.046
22-Jul-2015	14:00:32	0.019	0.058
22-Jul-2015	14:04:32	0.037	0.028
23-Jul-2015	07:34:52	0.049	0.028
23-Jul-2015	07:38:52	0.007	0.020
23-Jul-2015	07:42:52	0.004	0.005
23-Jul-2015	07:46:52	0.004	0.003
23-Jul-2015	07:50:52	0.000	0.002
23-Jul-2015	07:54:52	0.002	0.001
23-Jul-2015	07:58:52	0.002	0.002
23-Jul-2015	08:02:52	0.001	0.002
23-Jul-2015	08:06:52	0.002	0.001
23-Jul-2015	08:10:52	0.001	0.005
23-Jul-2015	08:14:52	0.011	0.006
23-Jul-2015	08:18:52	0.006	0.006
23-Jul-2015	08:22:52	0.001	0.004
23-Jul-2015	08:26:52	0.004	0.004
23-Jul-2015	08:30:52	0.006	0.006
23-Jul-2015	08:34:52	0.007	0.005
23-Jul-2015	08:38:52	0.001	0.003
23-Jul-2015	08:42:52	0.000	0.003
23-Jul-2015	08:46:52	0.007	0.003
23-Jul-2015	08:50:52	0.003	0.006
23-Jul-2015	08:54:52	0.009	0.008
23-Jul-2015	08:58:52	0.012	0.007
23-Jul-2015	09:02:52	0.000	0.006
23-Jul-2015	09:06:52	0.005	0.011
23-Jul-2015	09:10:52	0.027	0.012
23-Jul-2015	09:14:52	0.004	0.011
23-Jul-2015	09:18:52	0.002	0.004
23-Jul-2015	09:22:52	0.006	0.003
23-Jul-2015	09:26:52	0.002	0.005
23-Jul-2015	09:30:52	0.008	0.003
23-Jul-2015	09:34:52	0.000	0.003

DUST MONITORING

July 2015

shading indicates values over the threshold

Monitor: 2

Threshold: 0.15 (mg/m^3)

Date	Time	Value (mg/m^3)	TWA (mg/m^3)
23-Jul-2015	09:38:52	0.000	0.000
23-Jul-2015	09:42:52	0.000	0.000
23-Jul-2015	09:46:52	0.001	0.000
23-Jul-2015	09:50:52	0.000	0.000
23-Jul-2015	09:54:52	0.000	0.008
23-Jul-2015	09:58:52	0.024	0.008
23-Jul-2015	10:02:52	0.001	0.008
23-Jul-2015	10:06:52	0.000	0.004
23-Jul-2015	10:10:52	0.011	0.004
23-Jul-2015	10:14:52	0.002	0.005
23-Jul-2015	10:18:52	0.001	0.006
23-Jul-2015	10:22:52	0.014	0.006
23-Jul-2015	10:26:52	0.002	0.006
23-Jul-2015	10:30:52	0.001	0.010
23-Jul-2015	10:34:52	0.027	0.012
23-Jul-2015	10:38:52	0.008	0.018
23-Jul-2015	10:42:52	0.019	0.009
23-Jul-2015	10:46:52	0.001	0.007
23-Jul-2015	10:50:52	0.001	0.002
23-Jul-2015	10:54:52	0.005	0.003
23-Jul-2015	10:58:52	0.002	0.004
23-Jul-2015	11:02:52	0.004	0.005
23-Jul-2015	11:06:52	0.008	0.005
23-Jul-2015	11:10:52	0.002	0.004
23-Jul-2015	11:14:52	0.002	0.002
23-Jul-2015	11:18:52	0.003	0.003
23-Jul-2015	11:22:52	0.004	0.004
23-Jul-2015	11:26:52	0.004	0.004
23-Jul-2015	11:30:52	0.003	0.003
23-Jul-2015	11:34:52	0.003	0.004
23-Jul-2015	11:38:52	0.005	0.004
27-Jul-2015	13:03:38	0.008	0.004
27-Jul-2015	13:07:38	0.000	0.003
27-Jul-2015	13:11:38	0.001	0.003
27-Jul-2015	13:15:38	0.009	0.003
27-Jul-2015	13:19:38	0.000	0.003
27-Jul-2015	13:23:38	0.000	0.000
27-Jul-2015	13:27:38	0.001	0.000
27-Jul-2015	13:31:38	0.000	0.000
27-Jul-2015	13:35:38	0.000	0.007
27-Jul-2015	13:39:38	0.020	0.007

DUST MONITORING

July 2015

shading indicates values over the threshold

Monitor: 2

Threshold: 0.15 (mg/m^3)

Date	Time	Value (mg/m^3)	TWA (mg/m^3)
27-Jul-2015	13:43:38	0.000	0.007
27-Jul-2015	13:47:38	0.000	0.000
27-Jul-2015	13:51:38	0.000	0.000
27-Jul-2015	13:55:38	0.000	0.000
27-Jul-2015	13:59:38	0.000	0.000
27-Jul-2015	14:03:38	0.000	0.000
27-Jul-2015	14:07:38	0.000	0.000
27-Jul-2015	14:11:38	0.000	0.000
27-Jul-2015	14:15:38	0.000	0.000
27-Jul-2015	14:19:38	0.000	0.000
27-Jul-2015	14:23:38	0.000	0.000
27-Jul-2015	14:27:38	0.000	0.001
27-Jul-2015	14:31:38	0.002	0.001
27-Jul-2015	14:35:38	0.002	0.001
27-Jul-2015	14:39:38	0.000	0.001
27-Jul-2015	14:43:38	0.000	0.000
27-Jul-2015	14:47:38	0.000	0.000
27-Jul-2015	14:51:38	0.000	0.000
27-Jul-2015	14:55:38	0.000	0.045
27-Jul-2015	14:59:38	0.136	0.081
27-Jul-2015	15:03:38	0.106	0.081
27-Jul-2015	15:07:38	0.000	0.035
27-Jul-2015	15:11:38	0.000	0.000
27-Jul-2015	15:15:38	0.000	0.000
27-Jul-2015	15:19:38	0.001	0.002
27-Jul-2015	15:23:38	0.006	0.003
27-Jul-2015	15:27:38	0.002	0.004
27-Jul-2015	15:31:38	0.005	0.181
27-Jul-2015	15:35:38	0.536	0.225
27-Jul-2015	15:39:38	0.133	0.223
27-Jul-2015	15:43:38	0.000	0.044
27-Jul-2015	15:47:38	0.000	0.000
27-Jul-2015	15:51:38	0.000	0.000
27-Jul-2015	15:55:38	0.000	0.056
27-Jul-2015	15:59:38	0.168	0.084
28-Jul-2015	08:06:54	0.043	0.039
28-Jul-2015	08:10:54	0.035	0.033
28-Jul-2015	08:14:54	0.022	0.027
28-Jul-2015	08:18:54	0.023	0.023
28-Jul-2015	08:22:54	0.023	0.023
28-Jul-2015	08:26:54	0.023	0.023

DUST MONITORING

July 2015

shading indicates values over the threshold

Monitor: 2

Threshold: 0.15 (mg/m^3)

Date	Time	Value (mg/m^3)	TWA (mg/m^3)
28-Jul-2015	08:30:54	0.022	0.025
28-Jul-2015	08:34:54	0.029	0.027
28-Jul-2015	08:38:54	0.029	0.030
28-Jul-2015	08:42:54	0.032	0.031
28-Jul-2015	08:46:54	0.031	0.032
28-Jul-2015	08:50:54	0.034	0.034
28-Jul-2015	08:54:54	0.037	0.035
28-Jul-2015	08:58:54	0.035	0.038
28-Jul-2015	09:02:54	0.043	0.041
28-Jul-2015	09:06:54	0.046	0.045
28-Jul-2015	09:10:54	0.046	0.046
28-Jul-2015	09:14:54	0.045	0.045
28-Jul-2015	09:18:54	0.043	0.042
28-Jul-2015	09:22:54	0.038	0.038
28-Jul-2015	09:26:54	0.034	0.036
28-Jul-2015	09:30:54	0.035	0.034
28-Jul-2015	09:34:54	0.034	0.035
28-Jul-2015	09:38:54	0.037	0.036
28-Jul-2015	09:42:54	0.036	0.036
28-Jul-2015	09:46:54	0.035	0.035
28-Jul-2015	09:50:54	0.034	0.034
28-Jul-2015	09:54:54	0.032	0.033
28-Jul-2015	09:58:54	0.034	0.033
28-Jul-2015	10:02:54	0.032	0.031
28-Jul-2015	10:06:54	0.027	0.028
28-Jul-2015	10:10:54	0.026	0.027
28-Jul-2015	10:14:54	0.027	0.026
28-Jul-2015	10:18:54	0.026	0.026
28-Jul-2015	10:22:54	0.026	0.026
28-Jul-2015	10:26:54	0.026	0.026
28-Jul-2015	10:30:54	0.026	0.026
28-Jul-2015	10:34:54	0.026	0.026
28-Jul-2015	10:38:54	0.025	0.025
28-Jul-2015	10:42:54	0.024	0.024
28-Jul-2015	10:46:54	0.022	0.023
28-Jul-2015	10:50:54	0.022	0.022
28-Jul-2015	10:54:54	0.022	0.022
28-Jul-2015	10:58:54	0.022	0.023
28-Jul-2015	11:02:54	0.024	0.022
28-Jul-2015	11:06:54	0.021	0.023
28-Jul-2015	11:10:54	0.024	0.022

DUST MONITORING

July 2015

shading indicates values over the threshold

Monitor: 2

Threshold: 0.15 (mg/m^3)

Date	Time	Value (mg/m^3)	TWA (mg/m^3)
28-Jul-2015	11:14:54	0.021	0.023
28-Jul-2015	11:18:54	0.023	0.024
28-Jul-2015	11:22:54	0.028	0.027
28-Jul-2015	11:26:54	0.030	0.026
28-Jul-2015	11:30:54	0.021	0.024
28-Jul-2015	11:34:54	0.021	0.021
28-Jul-2015	11:38:54	0.020	0.020
28-Jul-2015	11:42:54	0.019	0.019
28-Jul-2015	11:46:54	0.019	0.020
28-Jul-2015	11:50:54	0.021	0.020
28-Jul-2015	11:54:54	0.021	0.021
28-Jul-2015	11:58:54	0.021	0.020
28-Jul-2015	12:02:54	0.019	0.019
28-Jul-2015	12:06:54	0.018	0.019
28-Jul-2015	12:10:54	0.019	0.019
28-Jul-2015	12:14:54	0.020	0.020
28-Jul-2015	12:18:54	0.022	0.021
28-Jul-2015	12:22:54	0.022	0.022
28-Jul-2015	12:26:54	0.023	0.021
28-Jul-2015	12:30:54	0.019	0.022
28-Jul-2015	12:34:54	0.025	0.025
28-Jul-2015	12:38:54	0.030	0.026
28-Jul-2015	12:42:54	0.023	0.025
28-Jul-2015	12:46:54	0.021	0.021
28-Jul-2015	12:50:54	0.019	0.020
28-Jul-2015	12:54:54	0.019	0.018
28-Jul-2015	12:58:54	0.017	0.018
28-Jul-2015	13:02:54	0.017	0.017
28-Jul-2015	13:06:54	0.018	0.018
28-Jul-2015	13:10:54	0.018	0.018
28-Jul-2015	13:14:54	0.018	0.018
28-Jul-2015	13:18:54	0.018	0.019
28-Jul-2015	13:22:54	0.022	0.021
28-Jul-2015	13:26:54	0.022	0.021
28-Jul-2015	13:30:54	0.018	0.019
28-Jul-2015	13:34:54	0.018	0.018
28-Jul-2015	13:38:54	0.018	0.018
28-Jul-2015	13:42:54	0.017	0.017
28-Jul-2015	13:46:54	0.015	0.016
28-Jul-2015	13:50:54	0.016	0.016
28-Jul-2015	13:54:54	0.016	0.016

DUST MONITORING

July 2015

shading indicates values over the threshold

Monitor: 2

Threshold: 0.15 (mg/m^3)

Date	Time	Value (mg/m^3)	TWA (mg/m^3)
28-Jul-2015	13:58:54	0.017	0.016
28-Jul-2015	14:02:54	0.016	0.015
28-Jul-2015	14:06:54	0.013	0.014
28-Jul-2015	14:10:54	0.012	0.012
28-Jul-2015	14:14:54	0.012	0.012
28-Jul-2015	14:18:54	0.012	0.013
28-Jul-2015	14:22:54	0.015	0.018
28-Jul-2015	14:26:54	0.027	0.044
28-Jul-2015	14:30:54	0.089	0.045
28-Jul-2015	14:34:54	0.020	0.047
28-Jul-2015	14:38:54	0.031	0.024
28-Jul-2015	14:42:54	0.022	0.035
28-Jul-2015	14:46:54	0.052	0.052
28-Jul-2015	14:50:54	0.083	0.045
28-Jul-2015	14:54:54	0.001	0.042
29-Jul-2015	08:10:35	0.031	0.027
29-Jul-2015	08:14:35	0.023	0.026
29-Jul-2015	08:18:35	0.023	0.023
29-Jul-2015	08:22:35	0.022	0.019
29-Jul-2015	08:26:35	0.013	0.016
29-Jul-2015	08:30:35	0.013	0.016
29-Jul-2015	08:34:35	0.021	0.016
29-Jul-2015	08:38:35	0.014	0.015
29-Jul-2015	08:42:35	0.010	0.010
29-Jul-2015	08:46:35	0.006	0.008
29-Jul-2015	08:50:35	0.007	0.006
29-Jul-2015	08:54:35	0.004	0.005
29-Jul-2015	08:58:35	0.005	0.004
29-Jul-2015	09:02:35	0.002	0.003
29-Jul-2015	09:06:35	0.001	0.001
29-Jul-2015	09:10:35	0.001	0.001
29-Jul-2015	09:14:35	0.001	0.001
29-Jul-2015	09:18:35	0.001	0.001
29-Jul-2015	09:22:35	0.002	0.001
29-Jul-2015	09:26:35	0.000	0.001
29-Jul-2015	09:30:35	0.000	0.000
29-Jul-2015	09:34:35	0.000	0.000
29-Jul-2015	09:38:35	0.001	0.000
29-Jul-2015	09:42:35	0.000	0.000
29-Jul-2015	09:46:35	0.000	0.000
29-Jul-2015	09:50:35	0.001	0.001

DUST MONITORING

July 2015

shading indicates values over the threshold

Monitor: 2

Threshold: 0.15 (mg/m^3)

Date	Time	Value (mg/m^3)	TWA (mg/m^3)
29-Jul-2015	09:54:35	0.001	0.002
29-Jul-2015	09:58:35	0.003	0.002
29-Jul-2015	10:02:35	0.001	0.002
29-Jul-2015	10:06:35	0.003	0.003
29-Jul-2015	10:10:35	0.005	0.004
29-Jul-2015	10:14:35	0.004	0.004
29-Jul-2015	10:18:35	0.002	0.003
29-Jul-2015	10:22:35	0.002	0.003
29-Jul-2015	10:26:35	0.004	0.003
29-Jul-2015	10:30:35	0.004	0.004
29-Jul-2015	10:34:35	0.005	0.005
29-Jul-2015	10:38:35	0.005	0.006
29-Jul-2015	10:42:35	0.007	0.017
29-Jul-2015	10:46:35	0.040	0.021
29-Jul-2015	10:50:35	0.017	0.023
29-Jul-2015	10:54:35	0.012	0.015
30-Jul-2015	07:54:20	0.051	0.046
30-Jul-2015	07:58:20	0.041	0.041
30-Jul-2015	08:02:20	0.030	0.034
30-Jul-2015	08:06:20	0.032	0.028
30-Jul-2015	08:10:20	0.021	0.025
30-Jul-2015	08:14:20	0.023	0.021
30-Jul-2015	08:18:20	0.020	0.021
30-Jul-2015	08:22:20	0.020	0.020
30-Jul-2015	08:26:20	0.021	0.021
30-Jul-2015	08:30:20	0.022	0.021
30-Jul-2015	08:34:20	0.021	0.022
30-Jul-2015	08:38:20	0.022	0.022
30-Jul-2015	08:42:20	0.023	0.022
30-Jul-2015	08:46:20	0.022	0.021
30-Jul-2015	08:50:20	0.019	0.020
30-Jul-2015	08:54:20	0.020	0.020
30-Jul-2015	08:58:20	0.020	0.020
30-Jul-2015	09:02:20	0.021	0.021
30-Jul-2015	09:06:20	0.021	0.021
30-Jul-2015	09:10:20	0.021	0.022
30-Jul-2015	09:14:20	0.023	0.021
30-Jul-2015	09:18:20	0.020	0.021
30-Jul-2015	09:22:20	0.021	0.021
30-Jul-2015	09:26:20	0.023	0.024
30-Jul-2015	09:30:20	0.028	0.026

DUST MONITORING

July 2015

shading indicates values over the threshold

Monitor: 2

Threshold: 0.15 (mg/m^3)

Date	Time	Value (mg/m^3)	TWA (mg/m^3)
30-Jul-2015	09:34:20	0.027	0.028
30-Jul-2015	09:38:20	0.029	0.028
30-Jul-2015	09:42:20	0.027	0.029
30-Jul-2015	09:46:20	0.031	0.031
30-Jul-2015	09:50:20	0.034	0.037
30-Jul-2015	09:54:20	0.045	0.041
30-Jul-2015	09:58:20	0.044	0.043
30-Jul-2015	10:02:20	0.039	0.041
30-Jul-2015	10:06:20	0.039	0.039
30-Jul-2015	10:10:20	0.038	0.040
30-Jul-2015	10:14:20	0.043	0.040
30-Jul-2015	10:18:20	0.039	0.041
30-Jul-2015	10:22:20	0.040	0.038
30-Jul-2015	10:26:20	0.036	0.037
30-Jul-2015	10:30:20	0.036	0.038
30-Jul-2015	10:34:20	0.043	0.040
30-Jul-2015	10:38:20	0.042	0.042
30-Jul-2015	10:42:20	0.042	0.042
30-Jul-2015	10:46:20	0.042	0.041
30-Jul-2015	10:50:20	0.040	0.042
30-Jul-2015	10:54:20	0.043	0.041
30-Jul-2015	10:58:20	0.041	0.041
30-Jul-2015	11:02:20	0.040	0.041
30-Jul-2015	11:06:20	0.042	0.041
30-Jul-2015	11:10:20	0.041	0.041
30-Jul-2015	11:14:20	0.039	0.040
30-Jul-2015	11:18:20	0.040	0.040
30-Jul-2015	11:22:20	0.040	0.040
30-Jul-2015	11:26:20	0.039	0.039
30-Jul-2015	11:30:20	0.039	0.039
30-Jul-2015	11:34:20	0.039	0.039
30-Jul-2015	11:38:20	0.039	0.041
30-Jul-2015	11:42:20	0.045	0.042
30-Jul-2015	11:46:20	0.043	0.044
30-Jul-2015	11:50:20	0.045	0.043
30-Jul-2015	11:54:20	0.040	0.042
30-Jul-2015	11:58:20	0.040	0.041
30-Jul-2015	12:02:20	0.042	0.042
30-Jul-2015	12:06:20	0.044	0.046
30-Jul-2015	12:10:20	0.051	0.044
30-Jul-2015	12:14:20	0.038	0.042

DUST MONITORING

July 2015

shading indicates values over the threshold

Monitor: 2

Threshold: 0.15 (mg/m^3)

Date	Time	Value (mg/m^3)	TWA (mg/m^3)
30-Jul-2015	12:18:20	0.037	0.038
30-Jul-2015	12:22:20	0.039	0.038
30-Jul-2015	12:26:20	0.038	0.043
30-Jul-2015	12:30:20	0.052	0.043
30-Jul-2015	12:34:20	0.038	0.043
30-Jul-2015	12:38:20	0.039	0.040
30-Jul-2015	12:42:20	0.042	0.039
30-Jul-2015	12:46:20	0.037	0.041
30-Jul-2015	12:50:20	0.045	0.041
30-Jul-2015	12:54:20	0.042	0.043
30-Jul-2015	12:58:20	0.043	0.047
30-Jul-2015	13:02:20	0.057	0.049
30-Jul-2015	13:06:20	0.046	0.047
30-Jul-2015	13:10:20	0.039	0.041
30-Jul-2015	13:14:20	0.039	0.039
30-Jul-2015	13:18:20	0.040	0.039
30-Jul-2015	13:22:20	0.038	0.038
30-Jul-2015	13:26:20	0.037	0.038
30-Jul-2015	13:30:20	0.039	0.038
30-Jul-2015	13:34:20	0.038	0.038
30-Jul-2015	13:38:20	0.037	0.038
30-Jul-2015	13:42:20	0.038	0.048
30-Jul-2015	13:46:20	0.069	0.051
30-Jul-2015	13:50:20	0.045	0.057
31-Jul-2015	07:08:20	0.019	0.022
31-Jul-2015	07:12:20	0.025	0.029
31-Jul-2015	07:16:20	0.042	0.030
31-Jul-2015	07:20:20	0.022	0.030
31-Jul-2015	07:24:20	0.025	0.024
31-Jul-2015	07:28:20	0.024	0.025
31-Jul-2015	07:32:20	0.026	0.024
31-Jul-2015	07:36:20	0.022	0.025
31-Jul-2015	07:40:20	0.027	0.026
31-Jul-2015	07:44:20	0.028	0.029
31-Jul-2015	07:48:20	0.032	0.027
31-Jul-2015	07:52:20	0.021	0.024
31-Jul-2015	07:56:20	0.020	0.020
31-Jul-2015	08:00:20	0.020	0.022
31-Jul-2015	08:04:20	0.026	0.022
31-Jul-2015	08:08:20	0.019	0.021
31-Jul-2015	08:12:20	0.019	0.019

DUST MONITORING

July 2015

shading indicates values over the threshold

Monitor: 2

Threshold: 0.15 (mg/m^3)

Date	Time	Value (mg/m^3)	TWA (mg/m^3)
31-Jul-2015	08:16:20	0.019	0.019
31-Jul-2015	08:20:20	0.020	0.019
31-Jul-2015	08:24:20	0.019	0.019
31-Jul-2015	08:28:20	0.019	0.020
31-Jul-2015	08:32:20	0.021	0.020
31-Jul-2015	08:36:20	0.021	0.022
31-Jul-2015	08:40:20	0.023	0.022
31-Jul-2015	08:44:20	0.022	0.023
31-Jul-2015	08:48:20	0.024	0.023
31-Jul-2015	08:52:20	0.024	0.024
31-Jul-2015	08:56:20	0.023	0.023
31-Jul-2015	09:00:20	0.022	0.022
31-Jul-2015	09:04:20	0.020	0.020
31-Jul-2015	09:08:20	0.018	0.019
31-Jul-2015	09:12:20	0.019	0.018
31-Jul-2015	09:16:20	0.018	0.018
31-Jul-2015	09:20:20	0.018	0.018
31-Jul-2015	09:24:20	0.018	0.019
31-Jul-2015	09:28:20	0.020	0.020
31-Jul-2015	09:32:20	0.021	0.021
31-Jul-2015	09:36:20	0.021	0.021
31-Jul-2015	09:40:20	0.020	0.020
31-Jul-2015	09:44:20	0.019	0.019
31-Jul-2015	09:48:20	0.018	0.019
31-Jul-2015	09:52:20	0.019	0.019
31-Jul-2015	09:56:20	0.019	0.019
31-Jul-2015	10:00:20	0.019	0.019
31-Jul-2015	10:04:20	0.020	0.021
31-Jul-2015	10:08:20	0.023	0.023
31-Jul-2015	10:12:20	0.025	0.024
31-Jul-2015	10:16:20	0.025	0.025
31-Jul-2015	10:20:20	0.026	0.027
31-Jul-2015	10:24:20	0.030	0.029
31-Jul-2015	10:28:20	0.031	0.031
31-Jul-2015	10:32:20	0.031	0.031
31-Jul-2015	10:36:20	0.031	0.031
31-Jul-2015	10:40:20	0.032	0.030
31-Jul-2015	10:44:20	0.028	0.030
31-Jul-2015	10:48:20	0.029	0.031
31-Jul-2015	10:52:20	0.037	0.032
31-Jul-2015	10:56:20	0.030	0.033

DUST MONITORING

July 2015

shading indicates values over the threshold

Monitor: 2

Threshold: 0.15 (mg/m^3)

Date	Time	Value (mg/m^3)	TWA (mg/m^3)
31-Jul-2015	11:00:20	0.033	0.034
31-Jul-2015	11:04:20	0.040	0.035
31-Jul-2015	11:08:20	0.032	0.034
31-Jul-2015	11:12:20	0.030	0.031
31-Jul-2015	11:16:20	0.030	0.030
31-Jul-2015	11:20:20	0.030	0.030
31-Jul-2015	11:24:20	0.031	0.030
31-Jul-2015	11:28:20	0.030	0.031
31-Jul-2015	11:32:20	0.033	0.033
31-Jul-2015	11:36:20	0.036	0.036
31-Jul-2015	11:40:20	0.040	0.037
31-Jul-2015	11:44:20	0.036	0.037
31-Jul-2015	11:48:20	0.034	0.033
31-Jul-2015	11:52:20	0.030	0.032
31-Jul-2015	11:56:20	0.032	0.036
31-Jul-2015	12:00:20	0.047	0.037
31-Jul-2015	12:04:20	0.032	0.037
31-Jul-2015	12:08:20	0.031	0.032
31-Jul-2015	12:12:20	0.033	0.033
31-Jul-2015	12:16:20	0.034	0.034
31-Jul-2015	12:20:20	0.035	0.036
31-Jul-2015	12:24:20	0.038	0.035
31-Jul-2015	12:28:20	0.033	0.034
31-Jul-2015	12:32:20	0.032	0.034
31-Jul-2015	12:36:20	0.038	0.034
31-Jul-2015	12:40:20	0.032	0.034
31-Jul-2015	12:44:20	0.033	0.033
31-Jul-2015	12:48:20	0.035	0.033
31-Jul-2015	12:52:20	0.030	0.032
31-Jul-2015	12:56:20	0.030	0.030
31-Jul-2015	13:00:20	0.029	0.030
31-Jul-2015	13:04:20	0.031	0.030
31-Jul-2015	13:08:20	0.031	0.031
31-Jul-2015	13:12:20	0.030	0.030
31-Jul-2015	13:16:20	0.030	0.031
31-Jul-2015	13:20:20	0.033	0.031
31-Jul-2015	13:24:20	0.031	0.032
31-Jul-2015	13:28:20	0.032	0.032

DUST MONITORING

July 2015

shading indicates values over the threshold

Monitor: 3

Threshold: 0.15 (mg/m^3)

Date	Time	Value (mg/m^3)	TWA (mg/m^3)
8-Jul-2015	11:27:35	0.039	0.039
13-Jul-2015	14:50:53	0.026	0.026
14-Jul-2015	08:14:44	0.013	0.011
14-Jul-2015	08:18:44	0.009	0.011
14-Jul-2015	08:22:44	0.010	0.010
14-Jul-2015	08:26:44	0.010	0.010
14-Jul-2015	08:30:44	0.009	0.009
14-Jul-2015	08:34:44	0.009	0.009
14-Jul-2015	08:38:44	0.010	0.010
14-Jul-2015	08:42:44	0.010	0.010
14-Jul-2015	08:46:44	0.011	0.010
14-Jul-2015	08:50:44	0.010	0.010
14-Jul-2015	08:54:44	0.010	0.011
14-Jul-2015	08:58:44	0.013	0.012
14-Jul-2015	09:02:44	0.012	0.013
14-Jul-2015	09:06:44	0.014	0.013
14-Jul-2015	09:10:44	0.012	0.013
14-Jul-2015	09:14:44	0.012	0.012
14-Jul-2015	09:18:44	0.011	0.011
14-Jul-2015	09:22:44	0.011	0.011
14-Jul-2015	09:26:44	0.011	0.011
14-Jul-2015	09:30:44	0.012	0.011
14-Jul-2015	09:34:44	0.011	0.011
14-Jul-2015	09:38:44	0.011	0.011
14-Jul-2015	09:42:44	0.010	0.010
14-Jul-2015	09:46:44	0.010	0.010
14-Jul-2015	09:50:44	0.010	0.011
14-Jul-2015	09:54:44	0.012	0.010
14-Jul-2015	09:58:44	0.008	0.009
14-Jul-2015	10:02:44	0.008	0.008
14-Jul-2015	10:06:44	0.009	0.008
14-Jul-2015	10:10:44	0.008	0.008
14-Jul-2015	10:14:44	0.008	0.008
14-Jul-2015	10:18:44	0.008	0.008
14-Jul-2015	10:22:44	0.008	0.008
14-Jul-2015	10:26:44	0.009	0.008
14-Jul-2015	10:30:44	0.007	0.008
14-Jul-2015	10:34:44	0.007	0.007
14-Jul-2015	10:38:44	0.006	0.006
14-Jul-2015	10:42:44	0.006	0.006
14-Jul-2015	10:46:44	0.006	0.006

DUST MONITORING

July 2015

shading indicates values over the threshold

Monitor: 3

Threshold: 0.15 (mg/m^3)

Date	Time	Value (mg/m^3)	TWA (mg/m^3)
14-Jul-2015	10:50:44	0.006	0.007
14-Jul-2015	10:54:44	0.008	0.007
14-Jul-2015	10:58:44	0.007	0.007
14-Jul-2015	11:02:44	0.006	0.007
14-Jul-2015	11:06:44	0.009	0.008
14-Jul-2015	11:10:44	0.008	0.008
14-Jul-2015	11:14:44	0.006	0.006
14-Jul-2015	11:18:44	0.004	0.005
14-Jul-2015	11:22:44	0.004	0.004
14-Jul-2015	11:26:44	0.005	0.004
14-Jul-2015	11:30:44	0.003	0.004
14-Jul-2015	11:34:44	0.004	0.004
14-Jul-2015	11:38:44	0.005	0.004
14-Jul-2015	11:42:44	0.004	0.004
14-Jul-2015	11:46:44	0.003	0.003
14-Jul-2015	11:50:44	0.003	0.003
14-Jul-2015	11:54:44	0.003	0.003
14-Jul-2015	11:58:44	0.003	0.003
14-Jul-2015	12:02:44	0.003	0.002
14-Jul-2015	12:06:44	0.001	0.002
14-Jul-2015	12:10:44	0.003	0.002
14-Jul-2015	12:14:44	0.003	0.003
14-Jul-2015	12:18:44	0.002	0.002
14-Jul-2015	12:22:44	0.002	0.002
14-Jul-2015	12:26:44	0.002	0.002
14-Jul-2015	12:30:44	0.002	0.002
14-Jul-2015	12:34:44	0.002	0.002
14-Jul-2015	12:38:44	0.003	0.003
14-Jul-2015	12:42:44	0.003	0.003
14-Jul-2015	12:46:44	0.003	0.003
14-Jul-2015	12:50:44	0.003	0.003
14-Jul-2015	12:54:44	0.004	0.004
14-Jul-2015	12:58:44	0.006	0.007
14-Jul-2015	13:02:44	0.010	0.010
14-Jul-2015	13:06:44	0.014	0.013
14-Jul-2015	13:10:44	0.014	0.014
14-Jul-2015	13:14:44	0.013	0.014
14-Jul-2015	13:18:44	0.015	0.014
14-Jul-2015	13:22:44	0.015	0.015
14-Jul-2015	13:26:44	0.015	0.016
14-Jul-2015	13:30:44	0.018	0.016

DUST MONITORING

July 2015

shading indicates values over the threshold

Monitor: 3

Threshold: 0.15 (mg/m^3)

Date	Time	Value (mg/m^3)	TWA (mg/m^3)
14-Jul-2015	13:34:44	0.014	0.016
14-Jul-2015	13:38:44	0.016	0.016
14-Jul-2015	13:42:44	0.018	0.015
14-Jul-2015	13:46:44	0.012	0.015
14-Jul-2015	13:50:44	0.015	0.013
14-Jul-2015	13:54:44	0.013	0.014
14-Jul-2015	13:58:44	0.013	0.014
14-Jul-2015	14:02:44	0.015	0.014
14-Jul-2015	14:06:44	0.014	0.015
14-Jul-2015	14:10:44	0.015	0.016
14-Jul-2015	14:14:44	0.019	0.017
14-Jul-2015	14:18:44	0.016	0.017
14-Jul-2015	14:22:44	0.016	0.015
14-Jul-2015	14:26:44	0.014	0.015
15-Jul-2015	08:56:02	0.000	0.000
15-Jul-2015	09:00:02	0.000	0.000
15-Jul-2015	09:04:02	0.001	0.001
15-Jul-2015	09:08:02	0.001	0.001
15-Jul-2015	09:12:02	0.001	0.001
15-Jul-2015	09:16:02	0.001	0.001
15-Jul-2015	09:20:02	0.000	0.001
15-Jul-2015	09:24:02	0.001	0.001
15-Jul-2015	09:28:02	0.001	0.001
15-Jul-2015	09:32:02	0.001	0.001
15-Jul-2015	09:36:02	0.001	0.001
15-Jul-2015	09:40:02	0.001	0.001
15-Jul-2015	09:44:02	0.000	0.000
15-Jul-2015	09:48:02	0.000	0.000
15-Jul-2015	09:52:02	0.001	0.001
15-Jul-2015	09:56:02	0.001	0.001
15-Jul-2015	10:00:02	0.001	0.001
15-Jul-2015	10:04:02	0.001	0.001
15-Jul-2015	10:08:02	0.001	0.001
15-Jul-2015	10:12:02	0.001	0.002
15-Jul-2015	10:16:02	0.003	0.002
15-Jul-2015	10:20:02	0.001	0.002
15-Jul-2015	10:24:02	0.002	0.001
15-Jul-2015	10:28:02	0.001	0.002
15-Jul-2015	10:32:02	0.003	0.002
15-Jul-2015	10:36:02	0.002	0.002
15-Jul-2015	10:40:02	0.002	0.002

DUST MONITORING

July 2015

shading indicates values over the threshold

Monitor: 3

Threshold: 0.15 (mg/m^3)

Date	Time	Value (mg/m^3)	TWA (mg/m^3)
15-Jul-2015	10:44:02	0.002	0.002
15-Jul-2015	10:48:02	0.003	0.003
15-Jul-2015	10:52:02	0.005	0.004
15-Jul-2015	10:56:02	0.004	0.005
15-Jul-2015	11:00:02	0.005	0.005
15-Jul-2015	11:04:02	0.006	0.006
15-Jul-2015	11:08:02	0.006	0.006
15-Jul-2015	11:12:02	0.006	0.006
15-Jul-2015	11:16:02	0.007	0.007
15-Jul-2015	11:20:02	0.008	0.008
15-Jul-2015	11:24:02	0.008	0.008
15-Jul-2015	11:28:02	0.007	0.008
15-Jul-2015	11:32:02	0.008	0.008
15-Jul-2015	11:36:02	0.008	0.008
15-Jul-2015	11:40:02	0.008	0.008
15-Jul-2015	11:44:02	0.008	0.008
15-Jul-2015	11:48:02	0.008	0.008
15-Jul-2015	11:52:02	0.008	0.008
15-Jul-2015	11:56:02	0.008	0.008
15-Jul-2015	12:00:02	0.008	0.008
15-Jul-2015	12:04:02	0.009	0.009
15-Jul-2015	12:08:02	0.009	0.009
16-Jul-2015	10:35:04	0.000	0.000
16-Jul-2015	10:39:04	0.000	0.000
16-Jul-2015	10:43:04	0.000	0.000
16-Jul-2015	10:47:04	0.000	0.000
16-Jul-2015	10:51:04	0.000	0.000
16-Jul-2015	10:55:04	0.000	0.000
16-Jul-2015	10:59:04	0.000	0.000
16-Jul-2015	11:03:04	0.000	0.000
16-Jul-2015	11:07:04	0.000	0.000
16-Jul-2015	11:11:04	0.000	0.000
16-Jul-2015	11:15:04	0.001	0.000
16-Jul-2015	11:19:04	0.000	0.000
16-Jul-2015	11:23:04	0.000	0.000
16-Jul-2015	11:27:04	0.000	0.000
16-Jul-2015	11:31:04	0.000	0.000
16-Jul-2015	11:35:04	0.000	0.000
16-Jul-2015	11:39:04	0.000	0.000
16-Jul-2015	11:43:04	0.000	0.000
16-Jul-2015	11:47:04	0.000	0.000

DUST MONITORING

July 2015

shading indicates values over the threshold

Monitor: 3

Threshold: 0.15 (mg/m^3)

Date	Time	Value (mg/m^3)	TWA (mg/m^3)
16-Jul-2015	11:51:04	0.000	0.000
16-Jul-2015	11:55:04	0.000	0.000
16-Jul-2015	11:59:04	0.000	0.000
16-Jul-2015	12:03:04	0.000	0.000
16-Jul-2015	12:07:04	0.000	0.000
16-Jul-2015	12:11:04	0.000	0.000
16-Jul-2015	12:15:04	0.000	0.000
16-Jul-2015	12:19:04	0.000	0.000
16-Jul-2015	12:23:04	0.000	0.000
16-Jul-2015	12:27:04	0.000	0.000
16-Jul-2015	12:31:04	0.000	0.000
16-Jul-2015	12:35:04	0.000	0.000
16-Jul-2015	12:39:04	0.000	0.000
16-Jul-2015	12:43:04	0.000	0.000
16-Jul-2015	12:47:04	0.000	0.000
16-Jul-2015	12:51:04	0.000	0.000
16-Jul-2015	12:55:04	0.000	0.000
16-Jul-2015	12:59:04	0.000	0.000
16-Jul-2015	13:03:04	0.000	0.000
16-Jul-2015	13:07:04	0.000	0.000
16-Jul-2015	13:11:04	0.000	0.000
16-Jul-2015	13:15:04	0.000	0.000
16-Jul-2015	13:19:04	0.000	0.000
16-Jul-2015	13:23:04	0.000	0.000
16-Jul-2015	13:27:04	0.000	0.000
16-Jul-2015	13:31:04	0.000	0.000
16-Jul-2015	13:35:04	0.000	0.000
16-Jul-2015	13:39:04	0.000	0.000
16-Jul-2015	13:43:04	0.000	0.000
16-Jul-2015	13:47:04	0.000	0.000
16-Jul-2015	13:51:04	0.000	0.000
16-Jul-2015	13:55:04	0.000	0.000
16-Jul-2015	13:59:04	0.000	0.000
16-Jul-2015	14:03:04	0.000	0.000
16-Jul-2015	14:07:04	0.000	0.000
16-Jul-2015	14:11:04	0.000	0.000
16-Jul-2015	14:15:04	0.000	0.000
16-Jul-2015	14:19:04	0.000	0.000
16-Jul-2015	14:23:04	0.000	0.001
16-Jul-2015	14:27:04	0.004	0.001
16-Jul-2015	14:31:04	0.000	0.001

DUST MONITORING

July 2015

shading indicates values over the threshold

Monitor: 3

Threshold: 0.15 (mg/m^3)

Date	Time	Value (mg/m^3)	TWA (mg/m^3)
16-Jul-2015	14:35:04	0.000	0.000
16-Jul-2015	14:39:04	0.000	0.000
16-Jul-2015	14:43:04	0.000	0.000
16-Jul-2015	14:47:04	0.000	0.000
16-Jul-2015	14:51:04	0.000	0.000
16-Jul-2015	14:55:04	0.000	0.000
16-Jul-2015	14:59:04	0.000	0.000
16-Jul-2015	15:03:04	0.000	0.000
17-Jul-2015	08:13:48	0.000	0.000
17-Jul-2015	08:17:48	0.000	0.000
17-Jul-2015	08:21:48	0.000	0.000
17-Jul-2015	08:25:48	0.000	0.000
17-Jul-2015	08:29:48	0.000	0.000
17-Jul-2015	08:33:48	0.000	0.000
17-Jul-2015	08:37:48	0.000	0.000
17-Jul-2015	08:41:48	0.000	0.000
17-Jul-2015	08:45:48	0.000	0.000
17-Jul-2015	08:49:48	0.000	0.000
17-Jul-2015	08:53:48	0.000	0.000
17-Jul-2015	08:57:48	0.000	0.000
17-Jul-2015	09:01:48	0.000	0.000
17-Jul-2015	09:05:48	0.000	0.000
17-Jul-2015	09:09:48	0.000	0.000
17-Jul-2015	09:13:48	0.001	0.000
17-Jul-2015	09:17:48	0.000	0.000
17-Jul-2015	09:21:48	0.000	0.000
17-Jul-2015	09:25:48	0.000	0.000
17-Jul-2015	09:29:48	0.000	0.000
17-Jul-2015	09:33:48	0.000	0.000
17-Jul-2015	09:37:48	0.000	0.000
17-Jul-2015	09:41:48	0.000	0.000
17-Jul-2015	09:45:48	0.000	0.000
17-Jul-2015	09:49:48	0.000	0.000
17-Jul-2015	09:53:48	0.000	0.000
17-Jul-2015	09:57:48	0.000	0.000
17-Jul-2015	10:01:48	0.000	0.000
17-Jul-2015	10:05:48	0.000	0.000
17-Jul-2015	10:09:48	0.000	0.000
17-Jul-2015	10:13:48	0.000	0.000
17-Jul-2015	10:17:48	0.000	0.000
17-Jul-2015	10:21:48	0.000	0.000

DUST MONITORING

July 2015

shading indicates values over the threshold

Monitor: 3

Threshold: 0.15 (mg/m^3)

Date	Time	Value (mg/m^3)	TWA (mg/m^3)
17-Jul-2015	10:25:48	0.000	0.000
17-Jul-2015	10:29:48	0.000	0.000
17-Jul-2015	10:33:48	0.000	0.000
17-Jul-2015	10:37:48	0.000	0.000
17-Jul-2015	10:41:48	0.000	0.000
17-Jul-2015	10:45:48	0.000	0.000
17-Jul-2015	10:49:48	0.000	0.000
17-Jul-2015	10:53:48	0.000	0.000
17-Jul-2015	10:57:48	0.000	0.000
17-Jul-2015	11:01:48	0.000	0.000
17-Jul-2015	11:05:48	0.000	0.000
17-Jul-2015	11:09:48	0.000	0.000
17-Jul-2015	11:13:48	0.000	0.000
17-Jul-2015	11:17:48	0.000	0.000
17-Jul-2015	11:21:48	0.000	0.000
17-Jul-2015	11:25:48	0.000	0.000
17-Jul-2015	11:29:48	0.000	0.000
17-Jul-2015	11:33:48	0.000	0.000
17-Jul-2015	11:37:48	0.000	0.000
17-Jul-2015	11:41:48	0.000	0.000
17-Jul-2015	11:45:48	0.000	0.000
17-Jul-2015	11:49:48	0.000	0.000
17-Jul-2015	11:53:48	0.000	0.000
17-Jul-2015	11:57:48	0.000	0.000
17-Jul-2015	12:01:48	0.000	0.000
17-Jul-2015	12:05:48	0.000	0.000
17-Jul-2015	12:09:48	0.000	0.000
17-Jul-2015	12:13:48	0.000	0.000
17-Jul-2015	12:17:48	0.000	0.000
17-Jul-2015	12:21:48	0.000	0.000
17-Jul-2015	12:25:48	0.000	0.000
17-Jul-2015	12:29:48	0.000	0.000
17-Jul-2015	12:33:48	0.000	0.000
17-Jul-2015	12:37:48	0.000	0.000
17-Jul-2015	12:41:48	0.000	0.000
17-Jul-2015	12:45:48	0.000	0.000
17-Jul-2015	12:49:48	0.000	0.000
17-Jul-2015	12:53:48	0.000	0.000
17-Jul-2015	12:57:48	0.000	0.000
17-Jul-2015	13:01:48	0.000	0.000
17-Jul-2015	13:05:48	0.000	0.000

DUST MONITORING

July 2015

shading indicates values over the threshold

Monitor: 3

Threshold: 0.15 (mg/m^3)

Date	Time	Value (mg/m^3)	TWA (mg/m^3)
17-Jul-2015	13:09:48	0.000	0.000
17-Jul-2015	13:13:48	0.000	0.000
17-Jul-2015	13:17:48	0.000	0.000
17-Jul-2015	13:21:48	0.000	0.000
17-Jul-2015	13:25:48	0.000	0.000
17-Jul-2015	13:29:48	0.000	0.000
17-Jul-2015	13:33:48	0.000	0.000
17-Jul-2015	13:37:48	0.000	0.000
17-Jul-2015	13:41:48	0.000	0.000
17-Jul-2015	13:45:48	0.000	0.000
17-Jul-2015	13:49:48	0.000	0.000
17-Jul-2015	13:53:48	0.000	0.000
17-Jul-2015	13:57:48	0.000	0.000
17-Jul-2015	14:01:48	0.000	0.000
17-Jul-2015	14:05:48	0.000	0.000
17-Jul-2015	14:09:48	0.000	0.000
17-Jul-2015	14:13:48	0.000	0.000
17-Jul-2015	14:17:48	0.000	0.000
17-Jul-2015	14:21:48	0.000	0.000
17-Jul-2015	14:25:48	0.000	0.000
17-Jul-2015	14:29:48	0.000	0.000
17-Jul-2015	14:33:48	0.000	0.000
17-Jul-2015	14:37:48	0.000	0.000
17-Jul-2015	14:41:48	0.000	0.000
17-Jul-2015	14:45:48	0.000	0.000
17-Jul-2015	14:49:48	0.000	0.000
17-Jul-2015	14:53:48	0.000	0.000
17-Jul-2015	14:57:48	0.000	0.000
17-Jul-2015	15:01:48	0.000	0.000
17-Jul-2015	15:05:48	0.000	0.000
17-Jul-2015	15:09:48	0.000	0.000
17-Jul-2015	15:13:48	0.000	0.000
21-Jul-2015	07:08:16	0.000	0.000
21-Jul-2015	07:12:16	0.000	0.000
21-Jul-2015	07:16:16	0.000	0.000
21-Jul-2015	07:20:16	0.000	0.000
21-Jul-2015	07:24:16	0.000	0.000
21-Jul-2015	07:28:16	0.000	0.000
21-Jul-2015	07:32:16	0.000	0.000
21-Jul-2015	07:36:16	0.000	0.000
21-Jul-2015	07:40:16	0.000	0.000

DUST MONITORING

July 2015

shading indicates values over the threshold

Monitor: 3

Threshold: 0.15 (mg/m^3)

Date	Time	Value (mg/m^3)	TWA (mg/m^3)
21-Jul-2015	07:44:16	0.000	0.000
21-Jul-2015	07:48:16	0.000	0.000
21-Jul-2015	07:52:16	0.000	0.000
21-Jul-2015	07:56:16	0.000	0.000
21-Jul-2015	08:00:16	0.000	0.000
21-Jul-2015	08:04:16	0.000	0.000
21-Jul-2015	08:08:16	0.000	0.000
21-Jul-2015	08:12:16	0.000	0.000
21-Jul-2015	08:16:16	0.000	0.000
21-Jul-2015	08:20:16	0.000	0.000
21-Jul-2015	08:24:16	0.000	0.000
21-Jul-2015	08:28:16	0.000	0.000
21-Jul-2015	08:32:16	0.000	0.000
21-Jul-2015	08:36:16	0.000	0.000
21-Jul-2015	08:40:16	0.000	0.000
21-Jul-2015	08:44:16	0.000	0.000
21-Jul-2015	08:48:16	0.000	0.000
21-Jul-2015	08:52:16	0.000	0.000
21-Jul-2015	08:56:16	0.000	0.000
21-Jul-2015	09:00:16	0.000	0.000
21-Jul-2015	09:04:16	0.000	0.000
21-Jul-2015	09:08:16	0.000	0.000
21-Jul-2015	09:12:16	0.000	0.000
21-Jul-2015	09:16:16	0.000	0.000
21-Jul-2015	09:20:16	0.000	0.000
21-Jul-2015	09:24:16	0.000	0.000
21-Jul-2015	09:28:16	0.000	0.000
21-Jul-2015	09:32:16	0.000	0.000
21-Jul-2015	09:36:16	0.000	0.000
21-Jul-2015	09:40:16	0.000	0.000
21-Jul-2015	09:44:16	0.000	0.000
21-Jul-2015	09:48:16	0.000	0.000
21-Jul-2015	09:52:16	0.000	0.000
21-Jul-2015	09:56:16	0.000	0.000
21-Jul-2015	10:00:16	0.000	0.000
21-Jul-2015	10:04:16	0.000	0.000
21-Jul-2015	10:08:16	0.000	0.000
21-Jul-2015	10:12:16	0.000	0.000
21-Jul-2015	10:16:16	0.000	0.000
21-Jul-2015	10:20:16	0.000	0.000
21-Jul-2015	10:24:16	0.000	0.000

DUST MONITORING

July 2015

shading indicates values over the threshold

Monitor: 3

Threshold: 0.15 (mg/m^3)

Date	Time	Value (mg/m^3)	TWA (mg/m^3)
21-Jul-2015	10:28:16	0.000	0.000
21-Jul-2015	10:32:16	0.000	0.000
21-Jul-2015	10:36:16	0.000	0.000
21-Jul-2015	10:40:16	0.000	0.000
21-Jul-2015	10:44:16	0.000	0.000
21-Jul-2015	10:48:16	0.001	0.000
21-Jul-2015	10:52:16	0.000	0.001
21-Jul-2015	10:56:16	0.001	0.001
21-Jul-2015	11:00:16	0.001	0.001
21-Jul-2015	11:04:16	0.002	0.001
21-Jul-2015	11:08:16	0.000	0.001
21-Jul-2015	11:12:16	0.000	0.000
21-Jul-2015	11:16:16	0.000	0.000
21-Jul-2015	11:20:16	0.000	0.001
21-Jul-2015	11:24:16	0.002	0.001
21-Jul-2015	11:28:16	0.000	0.001
21-Jul-2015	11:32:16	0.000	0.000
21-Jul-2015	11:36:16	0.001	0.000
21-Jul-2015	11:40:16	0.000	0.001
21-Jul-2015	11:44:16	0.001	0.000
21-Jul-2015	11:48:16	0.000	0.000
21-Jul-2015	11:52:16	0.000	0.000
21-Jul-2015	11:56:16	0.000	0.000
21-Jul-2015	12:00:16	0.000	0.000
21-Jul-2015	12:04:16	0.000	0.000
21-Jul-2015	12:08:16	0.000	0.000
21-Jul-2015	12:12:16	0.000	0.000
21-Jul-2015	12:16:16	0.000	0.000
21-Jul-2015	12:20:16	0.000	0.000
21-Jul-2015	12:24:16	0.000	0.000
21-Jul-2015	12:28:16	0.000	0.000
21-Jul-2015	12:32:16	0.000	0.000
21-Jul-2015	12:36:16	0.000	0.000
21-Jul-2015	12:40:16	0.000	0.000
21-Jul-2015	12:44:16	0.000	0.000
21-Jul-2015	12:48:16	0.000	0.000
21-Jul-2015	12:52:16	0.000	0.000
21-Jul-2015	12:56:16	0.000	0.000
21-Jul-2015	13:00:16	0.000	0.000
21-Jul-2015	13:04:16	0.000	0.000
21-Jul-2015	13:08:16	0.000	0.000

DUST MONITORING

July 2015

shading indicates values over the threshold

Monitor: 3

Threshold: 0.15 (mg/m^3)

Date	Time	Value (mg/m^3)	TWA (mg/m^3)
21-Jul-2015	13:12:16	0.000	0.000
21-Jul-2015	13:16:16	0.000	0.000
21-Jul-2015	13:20:16	0.000	0.000
21-Jul-2015	13:24:16	0.000	0.000
21-Jul-2015	13:28:16	0.000	0.000
21-Jul-2015	13:32:16	0.000	0.000
21-Jul-2015	13:36:16	0.000	0.000
21-Jul-2015	13:40:16	0.000	0.000
21-Jul-2015	13:44:16	0.000	0.000
21-Jul-2015	13:48:16	0.000	0.000
21-Jul-2015	13:52:16	0.000	0.000
21-Jul-2015	13:56:16	0.000	0.000
21-Jul-2015	14:00:16	0.000	0.000
21-Jul-2015	14:04:16	0.000	0.000
21-Jul-2015	14:08:16	0.000	0.003
21-Jul-2015	14:12:16	0.009	0.009
21-Jul-2015	14:16:16	0.017	0.009
21-Jul-2015	14:20:16	0.001	0.008
21-Jul-2015	14:24:16	0.005	0.003
22-Jul-2015	08:09:12	0.000	0.000
22-Jul-2015	08:13:12	0.000	0.000
22-Jul-2015	08:17:12	0.000	0.000
22-Jul-2015	08:21:12	0.000	0.001
22-Jul-2015	08:25:12	0.003	0.001
22-Jul-2015	08:29:12	0.000	0.001
22-Jul-2015	08:33:12	0.000	0.000
22-Jul-2015	08:37:12	0.000	0.000
22-Jul-2015	08:41:12	0.000	0.000
22-Jul-2015	08:45:12	0.000	0.000
22-Jul-2015	08:49:12	0.000	0.000
22-Jul-2015	08:53:12	0.000	0.000
22-Jul-2015	08:57:12	0.000	0.000
22-Jul-2015	09:01:12	0.000	0.000
22-Jul-2015	09:05:12	0.000	0.000
22-Jul-2015	09:09:12	0.000	0.000
22-Jul-2015	09:13:12	0.000	0.000
22-Jul-2015	09:17:12	0.000	0.000
22-Jul-2015	09:21:12	0.000	0.000
22-Jul-2015	09:25:12	0.000	0.000
22-Jul-2015	09:29:12	0.000	0.000
22-Jul-2015	09:33:12	0.000	0.000

DUST MONITORING

July 2015

shading indicates values over the threshold

Monitor: 3

Threshold: 0.15 (mg/m^3)

Date	Time	Value (mg/m^3)	TWA (mg/m^3)
22-Jul-2015	09:37:12	0.000	0.000
22-Jul-2015	09:41:12	0.000	0.000
22-Jul-2015	09:45:12	0.000	0.000
22-Jul-2015	09:49:12	0.000	0.000
22-Jul-2015	09:53:12	0.000	0.000
22-Jul-2015	09:57:12	0.000	0.000
22-Jul-2015	10:01:12	0.001	0.001
22-Jul-2015	10:05:12	0.001	0.001
22-Jul-2015	10:09:12	0.000	0.000
22-Jul-2015	10:13:12	0.000	0.000
22-Jul-2015	10:17:12	0.000	0.000
22-Jul-2015	10:21:12	0.000	0.000
22-Jul-2015	10:25:12	0.000	0.000
22-Jul-2015	10:29:12	0.000	0.000
22-Jul-2015	10:33:12	0.000	0.000
22-Jul-2015	10:37:12	0.000	0.000
22-Jul-2015	10:41:12	0.001	0.000
22-Jul-2015	10:45:12	0.000	0.000
22-Jul-2015	10:49:12	0.000	0.000
22-Jul-2015	10:53:12	0.000	0.000
22-Jul-2015	10:57:12	0.000	0.000
22-Jul-2015	11:01:12	0.000	0.000
22-Jul-2015	11:05:12	0.001	0.000
22-Jul-2015	11:09:12	0.000	0.001
22-Jul-2015	11:13:12	0.002	0.001
22-Jul-2015	11:17:12	0.000	0.001
22-Jul-2015	11:21:12	0.000	0.000
22-Jul-2015	11:25:12	0.000	0.000
22-Jul-2015	11:29:12	0.000	0.000
22-Jul-2015	11:33:12	0.000	0.000
22-Jul-2015	11:37:12	0.000	0.000
22-Jul-2015	11:41:12	0.000	0.000
22-Jul-2015	11:45:12	0.000	0.000
22-Jul-2015	11:49:12	0.001	0.001
22-Jul-2015	11:53:12	0.001	0.001
22-Jul-2015	11:57:12	0.000	0.000
22-Jul-2015	12:01:12	0.000	0.000
22-Jul-2015	12:05:12	0.000	0.000
22-Jul-2015	12:09:12	0.000	0.000
22-Jul-2015	12:13:12	0.000	0.002
22-Jul-2015	12:17:12	0.006	0.002

DUST MONITORING

July 2015

shading indicates values over the threshold

Monitor: 3

Threshold: 0.15 (mg/m^3)

Date	Time	Value (mg/m^3)	TWA (mg/m^3)
22-Jul-2015	12:21:12	0.000	0.002
22-Jul-2015	12:25:12	0.001	0.000
22-Jul-2015	12:29:12	0.000	0.000
22-Jul-2015	12:33:12	0.000	0.000
22-Jul-2015	12:37:12	0.000	0.000
22-Jul-2015	12:41:12	0.000	0.001
22-Jul-2015	12:45:12	0.004	0.001
22-Jul-2015	12:49:12	0.000	0.003
22-Jul-2015	12:53:12	0.004	0.001
22-Jul-2015	12:57:12	0.000	0.001
22-Jul-2015	13:01:12	0.000	0.000
22-Jul-2015	13:05:12	0.000	0.000
22-Jul-2015	13:09:12	0.000	0.000
22-Jul-2015	13:13:12	0.000	0.000
22-Jul-2015	13:17:12	0.000	0.001
22-Jul-2015	13:21:12	0.004	0.002
22-Jul-2015	13:25:12	0.001	0.002
22-Jul-2015	13:29:12	0.000	0.000
22-Jul-2015	13:33:12	0.000	0.000
22-Jul-2015	13:37:12	0.000	0.000
22-Jul-2015	13:41:12	0.000	0.000
22-Jul-2015	13:45:12	0.000	0.000
22-Jul-2015	13:49:12	0.000	0.000
22-Jul-2015	13:53:12	0.000	0.000
22-Jul-2015	13:57:12	0.001	0.001
22-Jul-2015	14:01:12	0.003	0.001
22-Jul-2015	14:05:12	0.000	0.002
22-Jul-2015	14:09:12	0.002	0.001
22-Jul-2015	14:13:12	0.001	0.001
22-Jul-2015	14:17:12	0.000	0.000
22-Jul-2015	14:21:12	0.000	0.000
22-Jul-2015	14:25:12	0.000	0.000
22-Jul-2015	14:29:12	0.000	0.000
22-Jul-2015	14:33:12	0.000	0.001
22-Jul-2015	14:37:12	0.003	0.001
22-Jul-2015	14:41:12	0.000	0.001
22-Jul-2015	14:45:12	0.000	0.000
22-Jul-2015	14:49:12	0.000	0.000
23-Jul-2015	07:44:35	0.000	0.000
23-Jul-2015	07:48:35	0.000	0.000
23-Jul-2015	07:52:35	0.000	0.000

DUST MONITORING

July 2015

shading indicates values over the threshold

Monitor: 3

Threshold: 0.15 (mg/m^3)

Date	Time	Value (mg/m^3)	TWA (mg/m^3)
28-Jul-2015	08:10:44	0.000	0.000
28-Jul-2015	08:14:44	0.000	0.000
28-Jul-2015	08:18:44	0.000	0.000
28-Jul-2015	08:22:44	0.000	0.000
28-Jul-2015	08:26:44	0.000	0.000
28-Jul-2015	08:30:44	0.000	0.000
28-Jul-2015	08:34:44	0.000	0.000
28-Jul-2015	08:38:44	0.000	0.000
28-Jul-2015	08:42:44	0.000	0.000
28-Jul-2015	08:46:44	0.001	0.001
28-Jul-2015	08:50:44	0.001	0.001
28-Jul-2015	08:54:44	0.002	0.002
28-Jul-2015	08:58:44	0.002	0.001
28-Jul-2015	09:02:44	0.000	0.010
28-Jul-2015	09:06:44	0.028	0.009
28-Jul-2015	09:10:44	0.000	0.009
28-Jul-2015	09:14:44	0.000	0.000
28-Jul-2015	09:18:44	0.000	0.000
28-Jul-2015	09:22:44	0.000	0.000
28-Jul-2015	09:26:44	0.000	0.000
28-Jul-2015	09:30:44	0.000	0.000
28-Jul-2015	09:34:44	0.000	0.000
28-Jul-2015	09:38:44	0.000	0.000
28-Jul-2015	09:42:44	0.000	0.000
28-Jul-2015	09:46:44	0.000	0.000
28-Jul-2015	09:50:44	0.000	0.000
28-Jul-2015	09:54:44	0.000	0.000
28-Jul-2015	09:58:44	0.000	0.000
28-Jul-2015	10:02:44	0.000	0.000
28-Jul-2015	10:06:44	0.000	0.003
28-Jul-2015	10:10:44	0.008	0.003
28-Jul-2015	10:14:44	0.000	0.003
28-Jul-2015	10:18:44	0.000	0.000
28-Jul-2015	10:22:44	0.000	0.000
28-Jul-2015	10:26:44	0.000	0.000
28-Jul-2015	10:30:44	0.000	0.000
28-Jul-2015	10:34:44	0.000	0.000
28-Jul-2015	10:38:44	0.000	0.000
28-Jul-2015	10:42:44	0.000	0.000
28-Jul-2015	10:46:44	0.000	0.000
28-Jul-2015	10:50:44	0.000	0.000

DUST MONITORING

July 2015

shading indicates values over the threshold

Monitor: 3

Threshold: 0.15 (mg/m^3)

Date	Time	Value (mg/m^3)	TWA (mg/m^3)
28-Jul-2015	10:54:44	0.000	0.000
28-Jul-2015	10:58:44	0.000	0.000
28-Jul-2015	11:02:44	0.000	0.000
28-Jul-2015	11:06:44	0.000	0.000
28-Jul-2015	11:10:44	0.000	0.000
28-Jul-2015	11:14:44	0.000	0.000
28-Jul-2015	11:18:44	0.000	0.000
28-Jul-2015	11:22:44	0.000	0.000
28-Jul-2015	11:26:44	0.000	0.000
28-Jul-2015	11:30:44	0.000	0.000
28-Jul-2015	11:34:44	0.001	0.000
28-Jul-2015	11:38:44	0.000	0.000
28-Jul-2015	11:42:44	0.000	0.000
28-Jul-2015	11:46:44	0.000	0.000
28-Jul-2015	11:50:44	0.000	0.000
28-Jul-2015	11:54:44	0.000	0.000
28-Jul-2015	11:58:44	0.000	0.000
28-Jul-2015	12:02:44	0.000	0.000
28-Jul-2015	12:06:44	0.000	0.000
28-Jul-2015	12:10:44	0.000	0.000
28-Jul-2015	12:14:44	0.000	0.000
28-Jul-2015	12:18:44	0.000	0.000
28-Jul-2015	12:22:44	0.000	0.000
28-Jul-2015	12:26:44	0.000	0.000
28-Jul-2015	12:30:44	0.000	0.000
28-Jul-2015	12:34:44	0.000	0.000
28-Jul-2015	12:38:44	0.000	0.000
28-Jul-2015	12:42:44	0.000	0.000
28-Jul-2015	12:46:44	0.000	0.000
28-Jul-2015	12:50:44	0.000	0.000
28-Jul-2015	12:54:44	0.000	0.000
28-Jul-2015	12:58:44	0.000	0.000
28-Jul-2015	13:02:44	0.000	0.000
28-Jul-2015	13:06:44	0.000	0.000
28-Jul-2015	13:10:44	0.000	0.000
28-Jul-2015	13:14:44	0.000	0.000
28-Jul-2015	13:18:44	0.000	0.000
28-Jul-2015	13:22:44	0.000	0.000
28-Jul-2015	13:26:44	0.000	0.000
28-Jul-2015	13:30:44	0.000	0.000
28-Jul-2015	13:34:44	0.000	0.000

DUST MONITORING

July 2015

shading indicates values over the threshold

Monitor: 3

Threshold: 0.15 (mg/m^3)

Date	Time	Value (mg/m^3)	TWA (mg/m^3)
28-Jul-2015	13:38:44	0.000	0.000
28-Jul-2015	13:42:44	0.000	0.000
28-Jul-2015	13:46:44	0.000	0.000
28-Jul-2015	13:50:44	0.000	0.000
28-Jul-2015	13:54:44	0.000	0.000
28-Jul-2015	13:58:44	0.001	0.001
28-Jul-2015	14:02:44	0.002	0.006
28-Jul-2015	14:06:44	0.014	0.005
28-Jul-2015	14:10:44	0.000	0.005
28-Jul-2015	14:14:44	0.000	0.000
28-Jul-2015	14:18:44	0.000	0.021
28-Jul-2015	14:22:44	0.062	0.021
28-Jul-2015	14:26:44	0.000	0.021
28-Jul-2015	14:30:44	0.000	0.000
28-Jul-2015	14:34:44	0.000	0.000
28-Jul-2015	14:38:44	0.000	0.000
28-Jul-2015	14:42:44	0.000	0.000
28-Jul-2015	14:46:44	0.000	0.001
28-Jul-2015	14:50:44	0.002	0.001
29-Jul-2015	07:50:10	0.000	0.001
29-Jul-2015	07:54:10	0.001	0.003
29-Jul-2015	07:58:10	0.009	0.024
29-Jul-2015	08:02:10	0.063	0.029
29-Jul-2015	08:06:10	0.015	0.034
29-Jul-2015	08:10:10	0.025	0.038
29-Jul-2015	08:14:10	0.075	0.056
29-Jul-2015	08:18:10	0.068	0.069
29-Jul-2015	08:22:10	0.063	0.055
29-Jul-2015	08:26:10	0.034	0.032
29-Jul-2015	08:30:10	0.000	0.011
29-Jul-2015	08:34:10	0.000	0.003
29-Jul-2015	08:38:10	0.009	0.003
29-Jul-2015	08:42:10	0.000	0.003
29-Jul-2015	08:46:10	0.001	0.000
29-Jul-2015	08:50:10	0.000	0.003
29-Jul-2015	08:54:10	0.007	0.014
29-Jul-2015	08:58:10	0.035	0.015
29-Jul-2015	09:02:10	0.004	0.028
29-Jul-2015	09:06:10	0.044	0.038
29-Jul-2015	09:10:10	0.065	0.041
29-Jul-2015	09:14:10	0.014	0.030

DUST MONITORING

July 2015

shading indicates values over the threshold

Monitor: 3

Threshold: 0.15 (mg/m^3)

Date	Time	Value (mg/m^3)	TWA (mg/m^3)
29-Jul-2015	09:18:10	0.010	0.027
29-Jul-2015	09:22:10	0.056	0.022
29-Jul-2015	09:26:10	0.000	0.019
29-Jul-2015	09:30:10	0.000	0.000
29-Jul-2015	09:34:10	0.000	0.000
29-Jul-2015	09:38:10	0.001	0.004
29-Jul-2015	09:42:10	0.010	0.005
29-Jul-2015	09:46:10	0.004	0.031
29-Jul-2015	09:50:10	0.079	0.029
29-Jul-2015	09:54:10	0.005	0.036
29-Jul-2015	09:58:10	0.024	0.010
29-Jul-2015	10:02:10	0.000	0.008
29-Jul-2015	10:06:10	0.000	0.000
29-Jul-2015	10:10:10	0.000	0.001
29-Jul-2015	10:14:10	0.004	0.001
29-Jul-2015	10:18:10	0.000	0.001
29-Jul-2015	10:22:10	0.000	0.000
29-Jul-2015	10:26:10	0.000	0.000
29-Jul-2015	10:30:10	0.000	0.000
29-Jul-2015	10:34:10	0.000	0.000
29-Jul-2015	10:38:10	0.000	0.000
29-Jul-2015	10:42:10	0.000	0.000
29-Jul-2015	10:46:10	0.000	0.000
29-Jul-2015	10:50:10	0.000	0.000
29-Jul-2015	10:54:10	0.000	0.000
29-Jul-2015	10:58:10	0.000	0.000
29-Jul-2015	11:02:10	0.000	0.000
29-Jul-2015	11:06:10	0.000	0.000
29-Jul-2015	11:10:10	0.000	0.000
29-Jul-2015	11:14:10	0.000	0.000
29-Jul-2015	11:18:10	0.000	0.000
29-Jul-2015	11:22:10	0.000	0.000
29-Jul-2015	11:26:10	0.000	0.000
29-Jul-2015	11:30:10	0.000	0.000
29-Jul-2015	11:34:10	0.000	0.000
29-Jul-2015	11:38:10	0.000	0.000
29-Jul-2015	11:42:10	0.000	0.000
29-Jul-2015	11:46:10	0.000	0.000
29-Jul-2015	11:50:10	0.000	0.000
29-Jul-2015	11:54:10	0.000	0.000
29-Jul-2015	11:58:10	0.000	0.000

DUST MONITORING

July 2015

shading indicates values over the threshold

Monitor: 3

Threshold: 0.15 (mg/m^3)

Date	Time	Value (mg/m^3)	TWA (mg/m^3)
29-Jul-2015	12:02:10	0.000	0.000
29-Jul-2015	12:06:10	0.000	0.000
29-Jul-2015	12:10:10	0.000	0.000
29-Jul-2015	12:14:10	0.000	0.000
29-Jul-2015	12:18:10	0.000	0.000
29-Jul-2015	12:22:10	0.000	0.000
29-Jul-2015	12:26:10	0.000	0.000
29-Jul-2015	12:30:10	0.000	0.000
29-Jul-2015	12:34:10	0.000	0.000
29-Jul-2015	12:38:10	0.000	0.000
29-Jul-2015	12:42:10	0.000	0.000
29-Jul-2015	12:46:10	0.000	0.000
29-Jul-2015	12:50:10	0.000	0.000
29-Jul-2015	12:54:10	0.000	0.000
29-Jul-2015	12:58:10	0.000	0.000
29-Jul-2015	13:02:10	0.000	0.000
29-Jul-2015	13:06:10	0.000	0.000
29-Jul-2015	13:10:10	0.000	0.000
29-Jul-2015	13:14:10	0.000	0.000
29-Jul-2015	13:18:10	0.000	0.000
29-Jul-2015	13:22:10	0.000	0.000
29-Jul-2015	13:26:10	0.000	0.000
29-Jul-2015	13:30:10	0.000	0.000
29-Jul-2015	13:34:10	0.000	0.000
29-Jul-2015	13:38:10	0.000	0.000
29-Jul-2015	13:42:10	0.000	0.000
29-Jul-2015	13:46:10	0.000	0.000
29-Jul-2015	13:50:10	0.000	0.000
29-Jul-2015	13:54:10	0.000	0.000
29-Jul-2015	13:58:10	0.000	0.000
29-Jul-2015	14:02:10	0.000	0.001
29-Jul-2015	14:06:10	0.003	0.005
29-Jul-2015	14:10:10	0.011	0.005
29-Jul-2015	14:14:10	0.000	0.004
29-Jul-2015	14:18:10	0.000	0.001
29-Jul-2015	14:22:10	0.003	0.006
29-Jul-2015	14:26:10	0.016	0.010
29-Jul-2015	14:30:10	0.011	0.019
29-Jul-2015	14:34:10	0.030	0.021
30-Jul-2015	08:01:24	0.000	0.000
30-Jul-2015	08:05:24	0.000	0.000

DUST MONITORING

July 2015

shading indicates values over the threshold

Monitor: 3

Threshold: 0.15 (mg/m^3)

Date	Time	Value (mg/m^3)	TWA (mg/m^3)
30-Jul-2015	08:09:24	0.000	0.000
30-Jul-2015	08:13:24	0.001	0.000
30-Jul-2015	08:17:24	0.000	0.000
30-Jul-2015	08:21:24	0.000	0.000
30-Jul-2015	08:25:24	0.000	0.000
30-Jul-2015	08:29:24	0.000	0.000
30-Jul-2015	08:33:24	0.000	0.000
30-Jul-2015	08:37:24	0.000	0.000
30-Jul-2015	08:41:24	0.000	0.000
30-Jul-2015	08:45:24	0.000	0.000
30-Jul-2015	08:49:24	0.000	0.000
30-Jul-2015	08:53:24	0.000	0.000
30-Jul-2015	08:57:24	0.000	0.000
30-Jul-2015	09:01:24	0.000	0.000
30-Jul-2015	09:05:24	0.000	0.000
30-Jul-2015	09:09:24	0.000	0.000
30-Jul-2015	09:13:24	0.000	0.000
30-Jul-2015	09:17:24	0.000	0.000
30-Jul-2015	09:21:24	0.000	0.000
30-Jul-2015	09:25:24	0.000	0.000
30-Jul-2015	09:29:24	0.000	0.000
30-Jul-2015	09:33:24	0.000	0.000
30-Jul-2015	09:37:24	0.000	0.000
30-Jul-2015	09:41:24	0.000	0.000
30-Jul-2015	09:45:24	0.000	0.000
30-Jul-2015	09:49:24	0.000	0.000
30-Jul-2015	09:53:24	0.000	0.000
30-Jul-2015	09:57:24	0.000	0.000
30-Jul-2015	10:01:24	0.000	0.000
30-Jul-2015	10:05:24	0.000	0.000
30-Jul-2015	10:09:24	0.000	0.000
30-Jul-2015	10:13:24	0.000	0.000
30-Jul-2015	10:17:24	0.000	0.000
30-Jul-2015	10:21:24	0.000	0.000
30-Jul-2015	10:25:24	0.000	0.000
30-Jul-2015	10:29:24	0.000	0.000
30-Jul-2015	10:33:24	0.000	0.000
30-Jul-2015	10:37:24	0.000	0.000
30-Jul-2015	10:41:24	0.000	0.000
30-Jul-2015	10:45:24	0.000	0.000
30-Jul-2015	10:49:24	0.000	0.000

DUST MONITORING

July 2015

shading indicates values over the threshold

Monitor: 3

Threshold: 0.15 (mg/m^3)

Date	Time	Value (mg/m^3)	TWA (mg/m^3)
30-Jul-2015	10:53:24	0.000	0.000
30-Jul-2015	10:57:24	0.000	0.000
30-Jul-2015	11:01:24	0.001	0.000
30-Jul-2015	11:05:24	0.000	0.000
30-Jul-2015	11:09:24	0.000	0.000
30-Jul-2015	11:13:24	0.000	0.000
30-Jul-2015	11:17:24	0.000	0.000
30-Jul-2015	11:21:24	0.000	0.000
30-Jul-2015	11:25:24	0.000	0.000
30-Jul-2015	11:29:24	0.000	0.000
30-Jul-2015	11:33:24	0.000	0.000
30-Jul-2015	11:37:24	0.000	0.000
30-Jul-2015	11:41:24	0.000	0.000
30-Jul-2015	11:45:24	0.000	0.000
30-Jul-2015	11:49:24	0.000	0.000
30-Jul-2015	11:53:24	0.000	0.000
30-Jul-2015	11:57:24	0.000	0.000
30-Jul-2015	12:01:24	0.000	0.000
30-Jul-2015	12:05:24	0.000	0.000
30-Jul-2015	12:09:24	0.000	0.000
30-Jul-2015	12:13:24	0.000	0.000
30-Jul-2015	12:17:24	0.000	0.000
30-Jul-2015	12:21:24	0.000	0.000
30-Jul-2015	12:25:24	0.000	0.000
30-Jul-2015	12:29:24	0.000	0.000
30-Jul-2015	12:33:24	0.000	0.000
30-Jul-2015	12:37:24	0.000	0.000
30-Jul-2015	12:41:24	0.000	0.000
30-Jul-2015	12:45:24	0.000	0.000
30-Jul-2015	12:49:24	0.000	0.000
30-Jul-2015	12:53:24	0.000	0.000
30-Jul-2015	12:57:24	0.000	0.000
30-Jul-2015	13:01:24	0.000	0.000
30-Jul-2015	13:05:24	0.000	0.000
30-Jul-2015	13:09:24	0.000	0.000
30-Jul-2015	13:13:24	0.000	0.000
30-Jul-2015	13:17:24	0.000	0.000
30-Jul-2015	13:21:24	0.000	0.000
30-Jul-2015	13:25:24	0.000	0.000
30-Jul-2015	13:29:24	0.000	0.000
30-Jul-2015	13:33:24	0.000	0.000

DUST MONITORING

July 2015

shading indicates values over the threshold

Monitor: 3

Threshold: 0.15 (mg/m^3)

Date	Time	Value (mg/m^3)	TWA (mg/m^3)
30-Jul-2015	13:37:24	0.000	0.000
30-Jul-2015	13:41:24	0.000	0.000
30-Jul-2015	13:45:24	0.000	0.000
30-Jul-2015	13:49:24	0.000	0.000
30-Jul-2015	13:53:24	0.000	0.000
30-Jul-2015	13:57:24	0.000	0.000
30-Jul-2015	14:01:24	0.000	0.000
31-Jul-2015	07:11:41	0.000	0.000
31-Jul-2015	07:15:41	0.000	0.000
31-Jul-2015	07:19:41	0.000	0.000
31-Jul-2015	07:23:41	0.000	0.000
31-Jul-2015	07:27:41	0.000	0.000
31-Jul-2015	07:31:41	0.000	0.000
31-Jul-2015	07:35:41	0.000	0.000
31-Jul-2015	07:39:41	0.000	0.000
31-Jul-2015	07:43:41	0.000	0.000
31-Jul-2015	07:47:41	0.000	0.000
31-Jul-2015	07:51:41	0.000	0.000
31-Jul-2015	07:55:41	0.000	0.000
31-Jul-2015	07:59:41	0.000	0.000
31-Jul-2015	08:03:41	0.000	0.000
31-Jul-2015	08:07:41	0.000	0.000
31-Jul-2015	08:11:41	0.000	0.000
31-Jul-2015	08:15:41	0.000	0.000
31-Jul-2015	08:19:41	0.000	0.000
31-Jul-2015	08:23:41	0.000	0.000
31-Jul-2015	08:27:41	0.000	0.000
31-Jul-2015	08:31:41	0.000	0.000
31-Jul-2015	08:35:41	0.000	0.000
31-Jul-2015	08:39:41	0.000	0.000
31-Jul-2015	08:43:41	0.000	0.000
31-Jul-2015	08:47:41	0.000	0.000
31-Jul-2015	08:51:41	0.000	0.000
31-Jul-2015	08:55:41	0.000	0.000
31-Jul-2015	08:59:41	0.000	0.000
31-Jul-2015	09:03:41	0.000	0.000
31-Jul-2015	09:07:41	0.000	0.000
31-Jul-2015	09:11:41	0.000	0.000
31-Jul-2015	09:15:41	0.000	0.000
31-Jul-2015	09:19:41	0.000	0.000
31-Jul-2015	09:23:41	0.000	0.000

DUST MONITORING

July 2015

shading indicates values over the threshold

Monitor: 3

Threshold: 0.15 (mg/m^3)

Date	Time	Value (mg/m^3)	TWA (mg/m^3)
31-Jul-2015	09:27:41	0.000	0.000
31-Jul-2015	09:31:41	0.000	0.000
31-Jul-2015	09:35:41	0.000	0.000
31-Jul-2015	09:39:41	0.000	0.000
31-Jul-2015	09:43:41	0.000	0.000
31-Jul-2015	09:47:41	0.000	0.000
31-Jul-2015	09:51:41	0.000	0.000
31-Jul-2015	09:55:41	0.000	0.000
31-Jul-2015	09:59:41	0.000	0.000
31-Jul-2015	10:03:41	0.000	0.000
31-Jul-2015	10:07:41	0.000	0.000
31-Jul-2015	10:11:41	0.000	0.000
31-Jul-2015	10:15:41	0.000	0.000
31-Jul-2015	10:19:41	0.000	0.000
31-Jul-2015	10:23:41	0.000	0.000
31-Jul-2015	10:27:41	0.000	0.000
31-Jul-2015	10:31:41	0.000	0.000
31-Jul-2015	10:35:41	0.000	0.000
31-Jul-2015	10:39:41	0.000	0.000
31-Jul-2015	10:43:41	0.000	0.000
31-Jul-2015	10:47:41	0.000	0.000
31-Jul-2015	10:51:41	0.000	0.000
31-Jul-2015	10:55:41	0.000	0.000
31-Jul-2015	10:59:41	0.000	0.000
31-Jul-2015	11:03:41	0.000	0.000
31-Jul-2015	11:07:41	0.000	0.000
31-Jul-2015	11:11:41	0.000	0.000
31-Jul-2015	11:15:41	0.000	0.000
31-Jul-2015	11:19:41	0.000	0.000
31-Jul-2015	11:23:41	0.000	0.000
31-Jul-2015	11:27:41	0.000	0.000
31-Jul-2015	11:31:41	0.000	0.000
31-Jul-2015	11:35:41	0.000	0.000
31-Jul-2015	11:39:41	0.000	0.000
31-Jul-2015	11:43:41	0.000	0.000
31-Jul-2015	11:47:41	0.000	0.000
31-Jul-2015	11:51:41	0.000	0.000
31-Jul-2015	11:55:41	0.000	0.000
31-Jul-2015	11:59:41	0.000	0.000
31-Jul-2015	12:03:41	0.000	0.000
31-Jul-2015	12:07:41	0.000	0.000

DUST MONITORING

July 2015

shading indicates values over the threshold

Monitor: 3

Threshold: 0.15 (mg/m^3)

Date	Time	Value (mg/m^3)	TWA (mg/m^3)
31-Jul-2015	12:11:41	0.000	0.000
31-Jul-2015	12:15:41	0.000	0.000
31-Jul-2015	12:19:41	0.000	0.000
31-Jul-2015	12:23:41	0.000	0.000
31-Jul-2015	12:27:41	0.000	0.000
31-Jul-2015	12:31:41	0.000	0.000
31-Jul-2015	12:35:41	0.000	0.000
31-Jul-2015	12:39:41	0.000	0.000
31-Jul-2015	12:43:41	0.000	0.000
31-Jul-2015	12:47:41	0.000	0.000
31-Jul-2015	12:51:41	0.000	0.000
31-Jul-2015	12:55:41	0.000	0.000
31-Jul-2015	12:59:41	0.000	0.000
31-Jul-2015	13:03:41	0.000	0.000
31-Jul-2015	13:07:41	0.000	0.000
31-Jul-2015	13:11:41	0.000	0.000
31-Jul-2015	13:15:41	0.000	0.000
31-Jul-2015	13:19:41	0.000	0.000
31-Jul-2015	13:23:41	0.000	0.000
31-Jul-2015	13:27:41	0.000	0.000
31-Jul-2015	13:31:41	0.000	0.001
31-Jul-2015	13:35:41	0.002	0.031
31-Jul-2015	13:39:41	0.090	0.046
31-Jul-2015	13:43:41	0.045	0.045
31-Jul-2015	13:47:41	0.000	0.015
31-Jul-2015	13:51:41	0.000	0.000
31-Jul-2015	13:55:41	0.000	0.000
31-Jul-2015	13:59:41	0.000	0.000
31-Jul-2015	14:03:41	0.000	0.000
31-Jul-2015	14:07:41	0.000	0.000

DUST MONITORING

August 2015

shading indicates values over the threshold

Monitor: 1

Threshold: 0.15 (mg/m^3)

Date	Time	Value (mg/m^3)	TWA (mg/m^3)
20-Aug-2015	11:44:52	0.003	0.003
21-Aug-2015	13:45:33	0.001	0.001
22-Aug-2015	11:25:58	0.002	0.002
22-Aug-2015	11:25:58	0.002	0.002
24-Aug-2015	11:05:08	0.019	0.019
25-Aug-2015	11:26:51	0.040	0.023
25-Aug-2015	15:26:51	0.006	0.023
26-Aug-2015	13:37:56	0.019	0.019
28-Aug-2015	07:18:28	0.013	0.014
28-Aug-2015	07:22:28	0.014	0.015
28-Aug-2015	07:26:28	0.017	0.014
28-Aug-2015	07:30:28	0.012	0.013
28-Aug-2015	07:34:28	0.010	0.011
28-Aug-2015	07:38:28	0.012	0.012
28-Aug-2015	07:42:28	0.014	0.013
28-Aug-2015	07:46:28	0.012	0.015
28-Aug-2015	07:50:28	0.018	0.014
28-Aug-2015	07:54:28	0.011	0.012
28-Aug-2015	07:58:28	0.008	0.014
28-Aug-2015	08:02:28	0.022	0.015
28-Aug-2015	08:06:28	0.014	0.015
28-Aug-2015	08:10:28	0.010	0.011
28-Aug-2015	08:14:28	0.009	0.014
28-Aug-2015	08:18:28	0.022	0.019
28-Aug-2015	08:22:28	0.025	0.019
28-Aug-2015	08:26:28	0.009	0.014
28-Aug-2015	08:30:28	0.008	0.010
28-Aug-2015	08:34:28	0.012	0.010
28-Aug-2015	08:38:28	0.011	0.012
28-Aug-2015	08:42:28	0.013	0.014
28-Aug-2015	08:46:28	0.017	0.015
28-Aug-2015	08:50:28	0.014	0.015
28-Aug-2015	08:54:28	0.014	0.111
28-Aug-2015	08:58:28	0.304	0.233
28-Aug-2015	09:02:28	0.382	0.233
28-Aug-2015	09:06:28	0.014	0.135
28-Aug-2015	09:10:28	0.010	0.013
28-Aug-2015	09:14:28	0.014	0.012
28-Aug-2015	09:18:28	0.011	0.011
28-Aug-2015	09:22:28	0.007	0.008
28-Aug-2015	09:26:28	0.006	0.041

DUST MONITORING

August 2015

shading indicates values over the threshold

Monitor: 1

Threshold: 0.15 (mg/m^3)

Date	Time	Value (mg/m^3)	TWA (mg/m^3)
28-Aug-2015	09:30:28	0.109	0.046
28-Aug-2015	09:34:28	0.023	0.050
28-Aug-2015	09:38:28	0.018	0.019
28-Aug-2015	09:42:28	0.015	0.072
28-Aug-2015	09:46:28	0.182	0.073
28-Aug-2015	09:50:28	0.022	0.072
28-Aug-2015	09:54:28	0.011	0.020
28-Aug-2015	09:58:28	0.026	0.073
28-Aug-2015	10:02:28	0.183	0.074
28-Aug-2015	10:06:28	0.014	0.071
28-Aug-2015	10:10:28	0.017	0.032
28-Aug-2015	10:14:28	0.064	0.052
28-Aug-2015	10:18:28	0.074	0.050
28-Aug-2015	10:22:28	0.013	0.035
28-Aug-2015	10:26:28	0.019	0.018
28-Aug-2015	10:30:28	0.022	0.022
28-Aug-2015	10:34:28	0.026	0.023
28-Aug-2015	10:38:28	0.021	0.023
28-Aug-2015	10:42:28	0.022	0.017
28-Aug-2015	10:46:28	0.007	0.011
28-Aug-2015	10:50:28	0.003	0.005
28-Aug-2015	10:54:28	0.005	0.004
28-Aug-2015	10:58:28	0.003	0.005
28-Aug-2015	11:02:28	0.006	0.005
28-Aug-2015	11:06:28	0.005	0.005
28-Aug-2015	11:10:28	0.004	0.004
28-Aug-2015	11:14:28	0.004	0.004
28-Aug-2015	11:18:28	0.003	0.003
28-Aug-2015	11:22:28	0.003	0.003
28-Aug-2015	11:26:28	0.004	0.004
28-Aug-2015	11:30:28	0.004	0.004
28-Aug-2015	11:34:28	0.005	0.035
28-Aug-2015	11:38:28	0.095	0.036
28-Aug-2015	11:42:28	0.007	0.036
28-Aug-2015	11:46:28	0.005	0.009
28-Aug-2015	11:50:28	0.015	0.012
28-Aug-2015	11:54:28	0.015	0.013
28-Aug-2015	11:58:28	0.008	0.012
28-Aug-2015	12:02:28	0.013	0.010
28-Aug-2015	12:06:28	0.010	0.011
28-Aug-2015	12:10:28	0.009	0.008

DUST MONITORING

August 2015

shading indicates values over the threshold

Monitor: 1

Threshold: 0.15 (mg/m^3)

Date	Time	Value (mg/m^3)	TWA (mg/m^3)
28-Aug-2015	12:14:28	0.006	0.009
28-Aug-2015	12:18:28	0.011	0.009
28-Aug-2015	12:22:28	0.011	0.009
28-Aug-2015	12:26:28	0.004	0.007
28-Aug-2015	12:30:28	0.005	0.004
28-Aug-2015	12:34:28	0.003	0.005
28-Aug-2015	12:38:28	0.008	0.005
28-Aug-2015	12:42:28	0.003	0.005
28-Aug-2015	12:46:28	0.005	0.005
28-Aug-2015	12:50:28	0.006	0.005
28-Aug-2015	12:54:28	0.004	0.007
28-Aug-2015	12:58:28	0.011	0.008
28-Aug-2015	13:02:28	0.008	0.009
28-Aug-2015	13:06:28	0.007	0.006
28-Aug-2015	13:10:28	0.004	0.005
28-Aug-2015	13:14:28	0.005	0.007
28-Aug-2015	13:18:28	0.012	0.009
28-Aug-2015	13:22:28	0.011	0.009
28-Aug-2015	13:26:28	0.005	0.007
28-Aug-2015	13:30:28	0.004	0.005
31-Aug-2015	08:37:18	0.000	0.000
31-Aug-2015	08:41:18	0.000	0.000
31-Aug-2015	08:45:18	0.000	0.000
31-Aug-2015	08:49:18	0.000	0.000
31-Aug-2015	08:53:18	0.000	0.000
31-Aug-2015	08:57:18	0.000	0.003
31-Aug-2015	09:01:18	0.009	0.003
31-Aug-2015	09:05:18	0.000	0.003
31-Aug-2015	09:09:18	0.001	0.001
31-Aug-2015	09:13:18	0.001	0.001
31-Aug-2015	09:17:18	0.000	0.000
31-Aug-2015	09:21:18	0.000	0.000
31-Aug-2015	09:25:18	0.000	0.000
31-Aug-2015	09:29:18	0.000	0.000
31-Aug-2015	09:33:18	0.000	0.000
31-Aug-2015	09:37:18	0.000	0.000
31-Aug-2015	09:41:18	0.000	0.000
31-Aug-2015	09:45:18	0.000	0.000
31-Aug-2015	09:49:18	0.000	0.000
31-Aug-2015	09:53:18	0.000	0.000
31-Aug-2015	09:57:18	0.001	0.001

DUST MONITORING

August 2015

shading indicates values over the threshold

Monitor: 1

Threshold: 0.15 (mg/m^3)

Date	Time	Value (mg/m^3)	TWA (mg/m^3)
31-Aug-2015	10:01:18	0.001	0.001
31-Aug-2015	10:05:18	0.000	0.000
31-Aug-2015	10:09:18	0.000	0.000
31-Aug-2015	10:13:18	0.000	0.000
31-Aug-2015	10:17:18	0.000	0.000
31-Aug-2015	10:21:18	0.000	0.000
31-Aug-2015	10:25:18	0.000	0.000
31-Aug-2015	10:29:18	0.000	0.000
31-Aug-2015	10:33:18	0.000	0.000
31-Aug-2015	10:37:18	0.000	0.000
31-Aug-2015	10:41:18	0.000	0.000
31-Aug-2015	10:45:18	0.000	0.000
31-Aug-2015	10:49:18	0.000	0.000
31-Aug-2015	10:53:18	0.000	0.000
31-Aug-2015	10:57:18	0.000	0.000
31-Aug-2015	11:01:18	0.000	0.000
31-Aug-2015	11:05:18	0.000	0.000
31-Aug-2015	11:09:18	0.000	0.000
31-Aug-2015	11:13:18	0.000	0.000
31-Aug-2015	11:17:18	0.000	0.007
31-Aug-2015	11:21:18	0.021	0.007
31-Aug-2015	11:25:18	0.000	0.007
31-Aug-2015	11:29:18	0.000	0.000
31-Aug-2015	11:33:18	0.000	0.000
31-Aug-2015	11:37:18	0.000	0.000
31-Aug-2015	11:41:18	0.000	0.000
31-Aug-2015	11:45:18	0.000	0.000
31-Aug-2015	11:49:18	0.000	0.001
31-Aug-2015	11:53:18	0.003	0.001
31-Aug-2015	11:57:18	0.000	0.001
31-Aug-2015	12:01:18	0.001	0.000
31-Aug-2015	12:05:18	0.000	0.000
31-Aug-2015	12:09:18	0.000	0.000
31-Aug-2015	12:13:18	0.000	0.001
31-Aug-2015	12:17:18	0.003	0.004
31-Aug-2015	12:21:18	0.009	0.004
31-Aug-2015	12:25:18	0.000	0.003
31-Aug-2015	12:29:18	0.001	0.000
31-Aug-2015	12:33:18	0.000	0.000
31-Aug-2015	12:37:18	0.000	0.000
31-Aug-2015	12:41:18	0.000	0.000

DUST MONITORING

August 2015

shading indicates values over the threshold

Monitor: 1

Threshold: 0.15 (mg/m^3)

Date	Time	Value (mg/m^3)	TWA (mg/m^3)
31-Aug-2015	12:45:18	0.000	0.000
31-Aug-2015	12:49:18	0.000	0.000
31-Aug-2015	12:53:18	0.001	0.001
31-Aug-2015	12:57:18	0.001	0.001
31-Aug-2015	13:01:18	0.000	0.000
31-Aug-2015	13:05:18	0.000	0.000
31-Aug-2015	13:09:18	0.000	0.000
31-Aug-2015	13:13:18	0.000	0.000
31-Aug-2015	13:17:18	0.000	0.000
31-Aug-2015	13:21:18	0.000	0.000
31-Aug-2015	13:25:18	0.000	0.000
31-Aug-2015	13:29:18	0.000	0.000
31-Aug-2015	13:33:18	0.000	0.000
31-Aug-2015	13:37:18	0.000	0.000
31-Aug-2015	13:41:18	0.000	0.000
31-Aug-2015	13:45:18	0.000	0.000
31-Aug-2015	13:49:18	0.000	0.000
31-Aug-2015	13:53:18	0.000	0.000
31-Aug-2015	13:57:18	0.000	0.000
31-Aug-2015	14:01:18	0.000	0.000
31-Aug-2015	14:05:18	0.000	0.000
31-Aug-2015	14:09:18	0.000	0.000
31-Aug-2015	14:13:18	0.000	0.000
31-Aug-2015	14:17:18	0.000	0.000
31-Aug-2015	14:21:18	0.000	0.000
31-Aug-2015	14:25:18	0.000	0.000
31-Aug-2015	14:29:18	0.000	0.000

DUST MONITORING

August 2015

shading indicates values over the threshold

Monitor: 2

Threshold: 0.15 (mg/m^3)

Date	Time	Value (mg/m^3)	TWA (mg/m^3)
3-Aug-2015	11:14:36	0.018	0.018
3-Aug-2015	11:18:36	0.017	0.017
3-Aug-2015	11:22:36	0.016	0.018
3-Aug-2015	11:26:36	0.020	0.019
3-Aug-2015	11:30:36	0.022	0.018
3-Aug-2015	11:34:36	0.013	0.017
3-Aug-2015	11:38:36	0.015	0.014
3-Aug-2015	11:42:36	0.015	0.014
3-Aug-2015	11:46:36	0.011	0.012
3-Aug-2015	11:50:36	0.011	0.011
3-Aug-2015	11:54:36	0.012	0.012
3-Aug-2015	11:58:36	0.013	0.013
3-Aug-2015	12:02:36	0.014	0.013
3-Aug-2015	12:06:36	0.013	0.013
3-Aug-2015	12:10:36	0.011	0.012
3-Aug-2015	12:14:36	0.013	0.012
3-Aug-2015	12:18:36	0.011	0.014
3-Aug-2015	12:22:36	0.019	0.015
3-Aug-2015	12:26:36	0.016	0.016
3-Aug-2015	12:30:36	0.014	0.020
3-Aug-2015	12:34:36	0.030	0.020
3-Aug-2015	12:38:36	0.015	0.020
3-Aug-2015	12:42:36	0.014	0.014
3-Aug-2015	12:46:36	0.012	0.013
3-Aug-2015	12:50:36	0.013	0.015
3-Aug-2015	12:54:36	0.020	0.015
3-Aug-2015	12:58:36	0.013	0.016
3-Aug-2015	13:02:36	0.014	0.013
3-Aug-2015	13:06:36	0.012	0.016
3-Aug-2015	13:10:36	0.022	0.017
3-Aug-2015	13:14:36	0.016	0.019
3-Aug-2015	13:18:36	0.018	0.019
3-Aug-2015	13:22:36	0.022	0.019
3-Aug-2015	13:26:36	0.017	0.021
3-Aug-2015	13:30:36	0.024	0.021
3-Aug-2015	13:34:36	0.023	0.022
3-Aug-2015	13:38:36	0.019	0.022
3-Aug-2015	13:42:36	0.025	0.023
3-Aug-2015	13:46:36	0.024	0.023
3-Aug-2015	13:50:36	0.019	0.020
3-Aug-2015	13:54:36	0.018	0.019

DUST MONITORING

August 2015

shading indicates values over the threshold

Monitor: 2

Threshold: 0.15 (mg/m^3)

Date	Time	Value (mg/m^3)	TWA (mg/m^3)
3-Aug-2015	13:58:36	0.021	0.019
3-Aug-2015	14:02:36	0.018	0.020
3-Aug-2015	14:06:36	0.020	0.018
3-Aug-2015	14:10:36	0.016	0.017
3-Aug-2015	14:14:36	0.016	0.037
3-Aug-2015	14:18:36	0.080	0.039
3-Aug-2015	14:22:36	0.020	0.039
3-Aug-2015	14:26:36	0.018	0.021
3-Aug-2015	14:30:36	0.025	0.023
3-Aug-2015	14:34:36	0.027	0.024
3-Aug-2015	14:38:36	0.021	0.023
3-Aug-2015	14:42:36	0.020	0.021
3-Aug-2015	14:46:36	0.022	0.022
3-Aug-2015	14:50:36	0.024	0.023
3-Aug-2015	14:54:36	0.024	0.023
3-Aug-2015	14:58:36	0.022	0.022
3-Aug-2015	15:02:36	0.021	0.022
3-Aug-2015	15:06:36	0.023	0.022
3-Aug-2015	15:10:36	0.022	0.022
3-Aug-2015	15:14:36	0.022	0.022
4-Aug-2015	07:51:30	0.099	0.086
4-Aug-2015	07:55:30	0.073	0.085
4-Aug-2015	07:59:30	0.083	0.075
4-Aug-2015	08:03:30	0.069	0.075
4-Aug-2015	08:07:30	0.073	0.072
4-Aug-2015	08:11:30	0.075	0.071
4-Aug-2015	08:15:30	0.066	0.067
4-Aug-2015	08:19:30	0.060	0.059
4-Aug-2015	08:23:30	0.051	0.053
4-Aug-2015	08:27:30	0.048	0.048
4-Aug-2015	08:31:30	0.046	0.046
4-Aug-2015	08:35:30	0.043	0.046
4-Aug-2015	08:39:30	0.050	0.047
4-Aug-2015	08:43:30	0.047	0.045
4-Aug-2015	08:47:30	0.038	0.041
4-Aug-2015	08:51:30	0.038	0.037
4-Aug-2015	08:55:30	0.035	0.036
4-Aug-2015	08:59:30	0.036	0.036
4-Aug-2015	09:03:30	0.037	0.037
4-Aug-2015	09:07:30	0.039	0.038
4-Aug-2015	09:11:30	0.039	0.040

DUST MONITORING

August 2015

shading indicates values over the threshold

Monitor: 2

Threshold: 0.15 (mg/m^3)

Date	Time	Value (mg/m^3)	TWA (mg/m^3)
4-Aug-2015	09:15:30	0.041	0.043
4-Aug-2015	09:19:30	0.048	0.045
4-Aug-2015	09:23:30	0.045	0.045
4-Aug-2015	09:27:30	0.041	0.043
4-Aug-2015	09:31:30	0.043	0.044
4-Aug-2015	09:35:30	0.047	0.047
4-Aug-2015	09:39:30	0.050	0.047
4-Aug-2015	09:43:30	0.045	0.047
4-Aug-2015	09:47:30	0.047	0.046
4-Aug-2015	09:51:30	0.047	0.046
4-Aug-2015	09:55:30	0.045	0.045
4-Aug-2015	09:59:30	0.044	0.045
4-Aug-2015	10:03:30	0.045	0.046
4-Aug-2015	10:07:30	0.050	0.048
4-Aug-2015	10:11:30	0.048	0.048
4-Aug-2015	10:15:30	0.045	0.045
4-Aug-2015	10:19:30	0.042	0.044
4-Aug-2015	10:23:30	0.044	0.046
4-Aug-2015	10:27:30	0.053	0.049
4-Aug-2015	10:31:30	0.050	0.050
4-Aug-2015	10:35:30	0.047	0.047
4-Aug-2015	10:39:30	0.045	0.045
4-Aug-2015	10:43:30	0.044	0.045
4-Aug-2015	10:47:30	0.045	0.043
4-Aug-2015	10:51:30	0.040	0.039
4-Aug-2015	10:55:30	0.031	0.040
4-Aug-2015	10:59:30	0.048	0.047
4-Aug-2015	11:03:30	0.063	0.055
4-Aug-2015	11:07:30	0.053	0.057
4-Aug-2015	11:11:30	0.054	0.053
4-Aug-2015	11:15:30	0.053	0.053
4-Aug-2015	11:19:30	0.053	0.053
4-Aug-2015	11:23:30	0.053	0.053
4-Aug-2015	11:27:30	0.053	0.054
4-Aug-2015	11:31:30	0.055	0.037
4-Aug-2015	11:35:30	0.004	0.048
4-Aug-2015	11:39:30	0.084	0.044
4-Aug-2015	11:43:30	0.045	0.064
4-Aug-2015	11:47:30	0.063	0.050
4-Aug-2015	11:51:30	0.042	0.048
4-Aug-2015	11:55:30	0.039	0.041

DUST MONITORING

August 2015

shading indicates values over the threshold

Monitor: 2

Threshold: 0.15 (mg/m^3)

Date	Time	Value (mg/m^3)	TWA (mg/m^3)
4-Aug-2015	11:59:30	0.043	0.044
4-Aug-2015	12:03:30	0.051	0.048
4-Aug-2015	12:07:30	0.049	0.048
4-Aug-2015	12:11:30	0.044	0.044
4-Aug-2015	12:15:30	0.039	0.041
4-Aug-2015	12:19:30	0.040	0.040
4-Aug-2015	12:23:30	0.041	0.041
4-Aug-2015	12:27:30	0.043	0.043
4-Aug-2015	12:31:30	0.045	0.042
4-Aug-2015	12:35:30	0.039	0.049
4-Aug-2015	12:39:30	0.064	0.039
4-Aug-2015	12:43:30	0.013	0.040
4-Aug-2015	12:47:30	0.042	0.033
4-Aug-2015	12:51:30	0.044	0.043
4-Aug-2015	12:55:30	0.042	0.042
4-Aug-2015	12:59:30	0.039	0.040
4-Aug-2015	13:03:30	0.039	0.040
4-Aug-2015	13:07:30	0.041	0.039
4-Aug-2015	13:11:30	0.038	0.039
4-Aug-2015	13:15:30	0.038	0.040
4-Aug-2015	13:19:30	0.043	0.040
4-Aug-2015	13:23:30	0.039	0.040
4-Aug-2015	13:27:30	0.038	0.039
4-Aug-2015	13:31:30	0.039	0.039
4-Aug-2015	13:35:30	0.039	0.038
4-Aug-2015	13:39:30	0.036	0.038
4-Aug-2015	13:43:30	0.038	0.037
4-Aug-2015	13:47:30	0.037	0.037
4-Aug-2015	13:51:30	0.035	0.036
4-Aug-2015	13:55:30	0.035	0.035
4-Aug-2015	13:59:30	0.034	0.037
4-Aug-2015	14:03:30	0.043	0.038
4-Aug-2015	14:07:30	0.038	0.040
4-Aug-2015	14:11:30	0.038	0.036
4-Aug-2015	14:15:30	0.031	0.034
4-Aug-2015	14:19:30	0.034	0.033
4-Aug-2015	14:23:30	0.034	0.034
4-Aug-2015	14:27:30	0.035	0.035
4-Aug-2015	14:31:30	0.037	0.036
4-Aug-2015	14:35:30	0.035	0.035
4-Aug-2015	14:39:30	0.033	0.038

DUST MONITORING

August 2015

shading indicates values over the threshold

Monitor: 2

Threshold: 0.15 (mg/m^3)

Date	Time	Value (mg/m^3)	TWA (mg/m^3)
4-Aug-2015	14:43:30	0.046	0.028
4-Aug-2015	14:47:30	0.006	0.028
4-Aug-2015	14:51:30	0.032	0.024
4-Aug-2015	14:55:30	0.034	0.033
4-Aug-2015	14:59:30	0.033	0.034
4-Aug-2015	15:03:30	0.036	0.042
4-Aug-2015	15:07:30	0.058	0.042
4-Aug-2015	15:11:30	0.033	0.045
4-Aug-2015	15:15:30	0.043	0.037
4-Aug-2015	15:19:30	0.034	0.038
4-Aug-2015	15:23:30	0.038	0.035
4-Aug-2015	15:27:30	0.033	0.041
4-Aug-2015	15:31:30	0.052	0.039
4-Aug-2015	15:35:30	0.032	0.039
4-Aug-2015	15:39:30	0.033	0.033
4-Aug-2015	15:43:30	0.035	0.034
4-Aug-2015	15:47:30	0.033	0.033
4-Aug-2015	15:51:30	0.032	0.032
4-Aug-2015	15:55:30	0.032	0.032
5-Aug-2015	07:14:48	0.056	0.056
5-Aug-2015	07:18:48	0.056	0.057
5-Aug-2015	07:22:48	0.058	0.066
5-Aug-2015	07:26:48	0.083	0.071
5-Aug-2015	07:30:48	0.071	0.073
5-Aug-2015	07:34:48	0.064	0.068
5-Aug-2015	07:38:48	0.069	0.063
5-Aug-2015	07:42:48	0.055	0.061
5-Aug-2015	07:46:48	0.059	0.057
5-Aug-2015	07:50:48	0.058	0.058
5-Aug-2015	07:54:48	0.058	0.057
5-Aug-2015	07:58:48	0.055	0.056
5-Aug-2015	08:02:48	0.056	0.055
5-Aug-2015	08:06:48	0.055	0.055
5-Aug-2015	08:10:48	0.055	0.054
5-Aug-2015	08:14:48	0.052	0.053
5-Aug-2015	08:18:48	0.051	0.052
5-Aug-2015	08:22:48	0.054	0.053
5-Aug-2015	08:26:48	0.053	0.053
5-Aug-2015	08:30:48	0.053	0.051
5-Aug-2015	08:34:48	0.048	0.049
5-Aug-2015	08:38:48	0.047	0.047

DUST MONITORING

August 2015

shading indicates values over the threshold

Monitor: 2

Threshold: 0.15 (mg/m^3)

Date	Time	Value (mg/m^3)	TWA (mg/m^3)
5-Aug-2015	08:42:48	0.047	0.047
5-Aug-2015	08:46:48	0.046	0.047
5-Aug-2015	08:50:48	0.048	0.048
5-Aug-2015	08:54:48	0.050	0.049
5-Aug-2015	08:58:48	0.050	0.050
6-Aug-2015	09:34:52	0.105	0.088
6-Aug-2015	09:38:52	0.071	0.084
6-Aug-2015	09:42:52	0.075	0.074
6-Aug-2015	09:46:52	0.075	0.090
6-Aug-2015	09:50:52	0.119	0.091
6-Aug-2015	09:54:52	0.080	0.094
6-Aug-2015	09:58:52	0.084	0.080
6-Aug-2015	10:02:52	0.076	0.077
6-Aug-2015	10:06:52	0.070	0.073
6-Aug-2015	10:10:52	0.072	0.069
6-Aug-2015	10:14:52	0.065	0.067
6-Aug-2015	10:18:52	0.064	0.064
6-Aug-2015	10:22:52	0.064	0.064
6-Aug-2015	10:26:52	0.064	0.063
6-Aug-2015	10:30:52	0.061	0.062
6-Aug-2015	10:34:52	0.060	0.061
6-Aug-2015	10:38:52	0.062	0.061
6-Aug-2015	10:42:52	0.062	0.063
6-Aug-2015	10:46:52	0.066	0.069
6-Aug-2015	10:50:52	0.078	0.075
6-Aug-2015	10:54:52	0.080	0.074
6-Aug-2015	10:58:52	0.063	0.069
6-Aug-2015	11:02:52	0.065	0.064
6-Aug-2015	11:06:52	0.063	0.064
10-Aug-2015	07:51:45	0.046	0.053
10-Aug-2015	07:55:45	0.059	0.058
10-Aug-2015	07:59:45	0.069	0.061
10-Aug-2015	08:03:45	0.055	0.059
10-Aug-2015	08:07:45	0.054	0.052
10-Aug-2015	08:11:45	0.047	0.047
10-Aug-2015	08:15:45	0.041	0.047
10-Aug-2015	08:19:45	0.053	0.043
10-Aug-2015	08:23:45	0.035	0.041
10-Aug-2015	08:27:45	0.035	0.038
10-Aug-2015	08:31:45	0.045	0.043
10-Aug-2015	08:35:45	0.049	0.044

DUST MONITORING

August 2015

shading indicates values over the threshold

Monitor: 2

Threshold: 0.15 (mg/m^3)

Date	Time	Value (mg/m^3)	TWA (mg/m^3)
10-Aug-2015	08:39:45	0.038	0.041
10-Aug-2015	08:43:45	0.035	0.038
10-Aug-2015	08:47:45	0.042	0.038
10-Aug-2015	08:51:45	0.038	0.040
10-Aug-2015	08:55:45	0.040	0.053
10-Aug-2015	08:59:45	0.080	0.052
10-Aug-2015	09:03:45	0.037	0.052
10-Aug-2015	09:07:45	0.038	0.038
10-Aug-2015	09:11:45	0.038	0.044
10-Aug-2015	09:15:45	0.055	0.044
10-Aug-2015	09:19:45	0.039	0.043
10-Aug-2015	09:23:45	0.036	0.041
10-Aug-2015	09:27:45	0.048	0.040
10-Aug-2015	09:31:45	0.036	0.041
10-Aug-2015	09:35:45	0.040	0.043
10-Aug-2015	09:39:45	0.054	0.047
10-Aug-2015	09:43:45	0.047	0.049
10-Aug-2015	09:47:45	0.045	0.050
10-Aug-2015	09:51:45	0.057	0.067
10-Aug-2015	09:55:45	0.099	0.077
10-Aug-2015	09:59:45	0.076	0.079
10-Aug-2015	10:03:45	0.062	0.076
10-Aug-2015	10:07:45	0.090	0.069
10-Aug-2015	10:11:45	0.054	0.070
10-Aug-2015	10:15:45	0.066	0.056
10-Aug-2015	10:19:45	0.047	0.067
10-Aug-2015	10:23:45	0.089	0.064
10-Aug-2015	10:27:45	0.056	0.063
10-Aug-2015	10:31:45	0.045	0.053
10-Aug-2015	10:35:45	0.058	0.055
10-Aug-2015	10:39:45	0.063	0.059
10-Aug-2015	10:43:45	0.056	0.060
10-Aug-2015	10:47:45	0.061	0.057
10-Aug-2015	10:51:45	0.053	0.055
10-Aug-2015	10:55:45	0.050	0.050
10-Aug-2015	10:59:45	0.048	0.053
10-Aug-2015	11:03:45	0.062	0.055
10-Aug-2015	11:07:45	0.055	0.058
10-Aug-2015	11:11:45	0.056	0.054
10-Aug-2015	11:15:45	0.050	0.051
10-Aug-2015	11:19:45	0.048	0.053

DUST MONITORING

August 2015

shading indicates values over the threshold

Monitor: 2

Threshold: 0.15 (mg/m^3)

Date	Time	Value (mg/m^3)	TWA (mg/m^3)
10-Aug-2015	11:23:45	0.061	0.056
10-Aug-2015	11:27:45	0.058	0.059
10-Aug-2015	11:31:45	0.057	0.059
10-Aug-2015	11:35:45	0.061	0.058
10-Aug-2015	11:39:45	0.057	0.058
10-Aug-2015	11:43:45	0.055	0.056
10-Aug-2015	11:47:45	0.056	0.056
10-Aug-2015	11:51:45	0.056	0.056
10-Aug-2015	11:55:45	0.055	0.056
10-Aug-2015	11:59:45	0.058	0.055
10-Aug-2015	12:03:45	0.053	0.058
10-Aug-2015	12:07:45	0.062	0.058
10-Aug-2015	12:11:45	0.059	0.062
10-Aug-2015	12:15:45	0.064	0.060
10-Aug-2015	12:19:45	0.058	0.062
10-Aug-2015	12:23:45	0.063	0.060
10-Aug-2015	12:27:45	0.058	0.059
10-Aug-2015	12:31:45	0.057	0.058
10-Aug-2015	12:35:45	0.058	0.058
10-Aug-2015	12:39:45	0.058	0.060
10-Aug-2015	12:43:45	0.063	0.059
10-Aug-2015	12:47:45	0.057	0.060
10-Aug-2015	12:51:45	0.059	0.061
10-Aug-2015	12:55:45	0.068	0.060
10-Aug-2015	12:59:45	0.053	0.058
10-Aug-2015	13:03:45	0.052	0.052
10-Aug-2015	13:07:45	0.051	0.052
10-Aug-2015	13:11:45	0.053	0.053
10-Aug-2015	13:15:45	0.055	0.054
10-Aug-2015	13:19:45	0.055	0.056
10-Aug-2015	13:23:45	0.057	0.056
10-Aug-2015	13:27:45	0.057	0.057
10-Aug-2015	13:31:45	0.056	0.056
10-Aug-2015	13:35:45	0.055	0.055
10-Aug-2015	13:39:45	0.055	0.057
10-Aug-2015	13:43:45	0.061	0.057
10-Aug-2015	13:47:45	0.054	0.057
10-Aug-2015	13:51:45	0.057	0.055
10-Aug-2015	13:55:45	0.054	0.055
10-Aug-2015	13:59:45	0.053	0.055
10-Aug-2015	14:03:45	0.059	0.055

DUST MONITORING

August 2015

shading indicates values over the threshold

Monitor: 2

Threshold: 0.15 (mg/m^3)

Date	Time	Value (mg/m^3)	TWA (mg/m^3)
10-Aug-2015	14:07:45	0.054	0.065
10-Aug-2015	14:11:45	0.083	0.064
10-Aug-2015	14:15:45	0.054	0.064
10-Aug-2015	14:19:45	0.056	0.060
10-Aug-2015	14:23:45	0.070	0.062
10-Aug-2015	14:27:45	0.059	0.062
10-Aug-2015	14:31:45	0.058	0.056
10-Aug-2015	14:35:45	0.052	0.062
10-Aug-2015	14:39:45	0.076	0.062
10-Aug-2015	14:43:45	0.058	0.065
10-Aug-2015	14:47:45	0.062	0.059
10-Aug-2015	14:51:45	0.058	0.060
10-Aug-2015	14:55:45	0.059	0.058
10-Aug-2015	14:59:45	0.058	0.059
10-Aug-2015	15:03:45	0.059	0.058
10-Aug-2015	15:07:45	0.058	0.059
11-Aug-2015	07:57:03	0.026	0.027
11-Aug-2015	08:01:03	0.027	0.027
11-Aug-2015	08:05:03	0.029	0.029
11-Aug-2015	08:09:03	0.030	0.029
11-Aug-2015	08:13:03	0.029	0.030
11-Aug-2015	08:17:03	0.030	0.030
11-Aug-2015	08:21:03	0.031	0.031
11-Aug-2015	08:25:03	0.031	0.031
11-Aug-2015	08:29:03	0.032	0.032
11-Aug-2015	08:33:03	0.034	0.032
11-Aug-2015	08:37:03	0.031	0.032
11-Aug-2015	08:41:03	0.031	0.031
11-Aug-2015	08:45:03	0.031	0.030
11-Aug-2015	08:49:03	0.029	0.029
11-Aug-2015	08:53:03	0.028	0.029
11-Aug-2015	08:57:03	0.030	0.030
11-Aug-2015	09:01:03	0.031	0.031
11-Aug-2015	09:05:03	0.031	0.030
11-Aug-2015	09:09:03	0.029	0.029
11-Aug-2015	09:13:03	0.027	0.028
11-Aug-2015	09:17:03	0.029	0.028
11-Aug-2015	09:21:03	0.029	0.030
11-Aug-2015	09:25:03	0.031	0.031
11-Aug-2015	09:29:03	0.032	0.031
11-Aug-2015	09:33:03	0.031	0.032

DUST MONITORING

August 2015

shading indicates values over the threshold

Monitor: 2

Threshold: 0.15 (mg/m^3)

Date	Time	Value (mg/m^3)	TWA (mg/m^3)
11-Aug-2015	09:37:03	0.032	0.031
11-Aug-2015	09:41:03	0.031	0.032
11-Aug-2015	09:45:03	0.032	0.031
11-Aug-2015	09:49:03	0.031	0.031
11-Aug-2015	09:53:03	0.031	0.031
11-Aug-2015	09:57:03	0.032	0.032
11-Aug-2015	10:01:03	0.033	0.033
11-Aug-2015	10:05:03	0.033	0.033
11-Aug-2015	10:09:03	0.032	0.032
11-Aug-2015	10:13:03	0.032	0.032
11-Aug-2015	10:17:03	0.032	0.032
11-Aug-2015	10:21:03	0.033	0.033
11-Aug-2015	10:25:03	0.034	0.033
11-Aug-2015	10:29:03	0.033	0.034
11-Aug-2015	10:33:03	0.034	0.034
11-Aug-2015	10:37:03	0.034	0.035
11-Aug-2015	10:41:03	0.036	0.035
11-Aug-2015	10:45:03	0.035	0.035
11-Aug-2015	10:49:03	0.034	0.035
11-Aug-2015	10:53:03	0.037	0.036
11-Aug-2015	10:57:03	0.036	0.037
11-Aug-2015	11:01:03	0.039	0.038
11-Aug-2015	11:05:03	0.038	0.038
11-Aug-2015	11:09:03	0.037	0.037
11-Aug-2015	11:13:03	0.036	0.037
11-Aug-2015	11:17:03	0.037	0.036
11-Aug-2015	11:21:03	0.036	0.037
11-Aug-2015	11:25:03	0.039	0.038
11-Aug-2015	11:29:03	0.038	0.037
11-Aug-2015	11:33:03	0.035	0.035
11-Aug-2015	11:37:03	0.033	0.034
11-Aug-2015	11:41:03	0.034	0.033
11-Aug-2015	11:45:03	0.033	0.034
11-Aug-2015	11:49:03	0.035	0.037
11-Aug-2015	11:53:03	0.043	0.039
11-Aug-2015	11:57:03	0.039	0.039
11-Aug-2015	12:01:03	0.035	0.037
11-Aug-2015	12:05:03	0.037	0.037
11-Aug-2015	12:09:03	0.039	0.038
12-Aug-2015	10:00:04	0.023	0.024
12-Aug-2015	10:04:04	0.025	0.025

DUST MONITORING

August 2015

shading indicates values over the threshold

Monitor: 2

Threshold: 0.15 (mg/m^3)

Date	Time	Value (mg/m^3)	TWA (mg/m^3)
12-Aug-2015	10:08:04	0.028	0.028
12-Aug-2015	10:12:04	0.032	0.031
12-Aug-2015	10:16:04	0.032	0.031
12-Aug-2015	10:20:04	0.029	0.031
12-Aug-2015	10:24:04	0.031	0.030
12-Aug-2015	10:28:04	0.031	0.031
12-Aug-2015	10:32:04	0.030	0.029
12-Aug-2015	10:36:04	0.027	0.029
12-Aug-2015	10:40:04	0.030	0.030
12-Aug-2015	10:44:04	0.034	0.032
12-Aug-2015	10:48:04	0.031	0.033
12-Aug-2015	10:52:04	0.034	0.032
12-Aug-2015	10:56:04	0.032	0.033
12-Aug-2015	11:00:04	0.033	0.033
12-Aug-2015	11:04:04	0.034	0.035
12-Aug-2015	11:08:04	0.038	0.037
12-Aug-2015	11:12:04	0.038	0.038
12-Aug-2015	11:16:04	0.039	0.038
12-Aug-2015	11:20:04	0.036	0.035
12-Aug-2015	11:24:04	0.031	0.034
12-Aug-2015	11:28:04	0.035	0.035
12-Aug-2015	11:32:04	0.038	0.038
12-Aug-2015	11:36:04	0.041	0.040
12-Aug-2015	11:40:04	0.040	0.039
12-Aug-2015	11:44:04	0.037	0.039
12-Aug-2015	11:48:04	0.040	0.043
12-Aug-2015	11:52:04	0.051	0.044
12-Aug-2015	11:56:04	0.041	0.044
12-Aug-2015	12:00:04	0.039	0.039
12-Aug-2015	12:04:04	0.037	0.038
12-Aug-2015	12:08:04	0.037	0.037
12-Aug-2015	12:12:04	0.037	0.038
12-Aug-2015	12:16:04	0.039	0.038
12-Aug-2015	12:20:04	0.039	0.038
12-Aug-2015	12:24:04	0.035	0.036
12-Aug-2015	12:28:04	0.033	0.036
12-Aug-2015	12:32:04	0.040	0.036
12-Aug-2015	12:36:04	0.035	0.037
12-Aug-2015	12:40:04	0.036	0.036
12-Aug-2015	12:44:04	0.037	0.036
12-Aug-2015	12:48:04	0.036	0.035

DUST MONITORING

August 2015

shading indicates values over the threshold

Monitor: 2

Threshold: 0.15 (mg/m^3)

Date	Time	Value (mg/m^3)	TWA (mg/m^3)
12-Aug-2015	12:52:04	0.033	0.035
12-Aug-2015	12:56:04	0.036	0.034
12-Aug-2015	13:00:04	0.032	0.034
12-Aug-2015	13:04:04	0.035	0.033
12-Aug-2015	13:08:04	0.031	0.033
12-Aug-2015	13:12:04	0.034	0.034
12-Aug-2015	13:16:04	0.037	0.037
12-Aug-2015	13:20:04	0.041	0.039
12-Aug-2015	13:24:04	0.038	0.038
12-Aug-2015	13:28:04	0.035	0.037
12-Aug-2015	13:32:04	0.039	0.037
12-Aug-2015	13:36:04	0.037	0.040
12-Aug-2015	13:40:04	0.045	0.040
12-Aug-2015	13:44:04	0.038	0.040
12-Aug-2015	13:48:04	0.037	0.037
12-Aug-2015	13:52:04	0.037	0.036
12-Aug-2015	13:56:04	0.035	0.036
12-Aug-2015	14:00:04	0.036	0.035
12-Aug-2015	14:04:04	0.035	0.035
12-Aug-2015	14:08:04	0.033	0.032
12-Aug-2015	14:12:04	0.029	0.031
12-Aug-2015	14:16:04	0.030	0.031
12-Aug-2015	14:20:04	0.033	0.031
12-Aug-2015	14:24:04	0.029	0.029
12-Aug-2015	14:28:04	0.026	0.028
12-Aug-2015	14:32:04	0.029	0.026
12-Aug-2015	14:36:04	0.024	0.029
12-Aug-2015	14:40:04	0.033	0.030
12-Aug-2015	14:44:04	0.032	0.033
12-Aug-2015	14:48:04	0.033	0.032
12-Aug-2015	14:52:04	0.032	0.033
13-Aug-2015	07:58:22	0.028	0.030
13-Aug-2015	08:02:22	0.031	0.030
13-Aug-2015	08:06:22	0.031	0.032
13-Aug-2015	08:10:22	0.035	0.033
13-Aug-2015	08:14:22	0.032	0.032
13-Aug-2015	08:18:22	0.030	0.030
13-Aug-2015	08:22:22	0.029	0.029
13-Aug-2015	08:26:22	0.029	0.030
13-Aug-2015	08:30:22	0.032	0.031
13-Aug-2015	08:34:22	0.031	0.032

DUST MONITORING

August 2015

shading indicates values over the threshold

Monitor: 2

Threshold: 0.15 (mg/m^3)

Date	Time	Value (mg/m^3)	TWA (mg/m^3)
13-Aug-2015	08:38:22	0.034	0.033
13-Aug-2015	08:42:22	0.034	0.033
13-Aug-2015	08:46:22	0.032	0.033
13-Aug-2015	08:50:22	0.033	0.032
13-Aug-2015	08:54:22	0.030	0.031
13-Aug-2015	08:58:22	0.030	0.030
13-Aug-2015	09:02:22	0.030	0.031
13-Aug-2015	09:06:22	0.032	0.030
13-Aug-2015	09:10:22	0.029	0.030
13-Aug-2015	09:14:22	0.029	0.028
13-Aug-2015	09:18:22	0.027	0.028
13-Aug-2015	09:22:22	0.029	0.029
13-Aug-2015	09:26:22	0.032	0.030
13-Aug-2015	09:30:22	0.030	0.030
13-Aug-2015	09:34:22	0.029	0.029
13-Aug-2015	09:38:22	0.029	0.030
13-Aug-2015	09:42:22	0.031	0.030
13-Aug-2015	09:46:22	0.030	0.030
13-Aug-2015	09:50:22	0.030	0.030
13-Aug-2015	09:54:22	0.030	0.030
13-Aug-2015	09:58:22	0.030	0.031
13-Aug-2015	10:02:22	0.033	0.030
13-Aug-2015	10:06:22	0.028	0.030
13-Aug-2015	10:10:22	0.028	0.028
13-Aug-2015	10:14:22	0.028	0.028
13-Aug-2015	10:18:22	0.027	0.027
13-Aug-2015	10:22:22	0.027	0.027
13-Aug-2015	10:26:22	0.028	0.028
13-Aug-2015	10:30:22	0.028	0.028
13-Aug-2015	10:34:22	0.027	0.031
13-Aug-2015	10:38:22	0.037	0.033
13-Aug-2015	10:42:22	0.036	0.034
13-Aug-2015	10:46:22	0.028	0.031
13-Aug-2015	10:50:22	0.028	0.029
13-Aug-2015	10:54:22	0.032	0.030
13-Aug-2015	10:58:22	0.030	0.030
13-Aug-2015	11:02:22	0.028	0.029
13-Aug-2015	11:06:22	0.029	0.028
13-Aug-2015	11:10:22	0.028	0.028
13-Aug-2015	11:14:22	0.028	0.028
13-Aug-2015	11:18:22	0.027	0.028

DUST MONITORING

August 2015

shading indicates values over the threshold

Monitor: 2

Threshold: 0.15 (mg/m^3)

Date	Time	Value (mg/m^3)	TWA (mg/m^3)
13-Aug-2015	11:22:22	0.028	0.028
13-Aug-2015	11:26:22	0.029	0.029
13-Aug-2015	11:30:22	0.029	0.029
13-Aug-2015	11:34:22	0.030	0.029
13-Aug-2015	11:38:22	0.029	0.030
13-Aug-2015	11:42:22	0.031	0.030
13-Aug-2015	11:46:22	0.031	0.032
13-Aug-2015	11:50:22	0.033	0.033
13-Aug-2015	11:54:22	0.035	0.034
13-Aug-2015	11:58:22	0.033	0.034
13-Aug-2015	12:02:22	0.034	0.034
13-Aug-2015	12:06:22	0.034	0.034
13-Aug-2015	12:10:22	0.034	0.034
13-Aug-2015	12:14:22	0.034	0.034
13-Aug-2015	12:18:22	0.035	0.035
13-Aug-2015	12:22:22	0.035	0.034
13-Aug-2015	12:26:22	0.032	0.034
13-Aug-2015	12:30:22	0.035	0.035
13-Aug-2015	12:34:22	0.038	0.037
13-Aug-2015	12:38:22	0.037	0.037
13-Aug-2015	12:42:22	0.035	0.035
13-Aug-2015	12:46:22	0.034	0.035
13-Aug-2015	12:50:22	0.037	0.037
13-Aug-2015	12:54:22	0.040	0.037
13-Aug-2015	12:58:22	0.035	0.036
13-Aug-2015	13:02:22	0.034	0.034
13-Aug-2015	13:06:22	0.034	0.034
13-Aug-2015	13:10:22	0.035	0.035
13-Aug-2015	13:14:22	0.036	0.036
13-Aug-2015	13:18:22	0.036	0.036
13-Aug-2015	13:22:22	0.037	0.041
13-Aug-2015	13:26:22	0.050	0.041
13-Aug-2015	13:30:22	0.037	0.042
13-Aug-2015	13:34:22	0.039	0.038
13-Aug-2015	13:38:22	0.038	0.039
13-Aug-2015	13:42:22	0.039	0.038
13-Aug-2015	13:46:22	0.037	0.037
13-Aug-2015	13:50:22	0.035	0.036
13-Aug-2015	13:54:22	0.036	0.036
13-Aug-2015	13:58:22	0.038	0.037
13-Aug-2015	14:02:22	0.038	0.040

DUST MONITORING

August 2015

shading indicates values over the threshold

Monitor: 2

Threshold: 0.15 (mg/m^3)

Date	Time	Value (mg/m^3)	TWA (mg/m^3)
13-Aug-2015	14:06:22	0.044	0.040
13-Aug-2015	14:10:22	0.037	0.039
13-Aug-2015	14:14:22	0.037	0.037
13-Aug-2015	14:18:22	0.037	0.037
13-Aug-2015	14:22:22	0.038	0.038
13-Aug-2015	14:26:22	0.039	0.038
13-Aug-2015	14:30:22	0.037	0.038
13-Aug-2015	14:34:22	0.037	0.038
13-Aug-2015	14:38:22	0.039	0.039
13-Aug-2015	14:42:22	0.040	0.039
13-Aug-2015	14:46:22	0.039	0.040
13-Aug-2015	14:50:22	0.040	0.040
13-Aug-2015	14:54:22	0.040	0.040
13-Aug-2015	14:58:22	0.040	0.041
13-Aug-2015	15:02:22	0.042	0.041
13-Aug-2015	15:06:22	0.041	0.041
13-Aug-2015	15:10:22	0.041	0.041
13-Aug-2015	15:14:22	0.041	0.041
13-Aug-2015	15:18:22	0.042	0.043
13-Aug-2015	15:22:22	0.046	0.044
13-Aug-2015	15:26:22	0.044	0.044
13-Aug-2015	15:30:22	0.042	0.045
13-Aug-2015	15:34:22	0.049	0.046
14-Aug-2015	07:13:27	0.064	0.065
14-Aug-2015	07:17:27	0.065	0.064
14-Aug-2015	07:21:27	0.064	0.063
14-Aug-2015	07:25:27	0.059	0.058
14-Aug-2015	07:29:27	0.050	0.053
14-Aug-2015	07:33:27	0.050	0.050
14-Aug-2015	07:37:27	0.049	0.049
14-Aug-2015	07:41:27	0.048	0.049
17-Aug-2015	07:33:36	0.029	0.029
17-Aug-2015	07:37:36	0.028	0.028
17-Aug-2015	07:41:36	0.027	0.027
17-Aug-2015	07:45:36	0.025	0.026
17-Aug-2015	07:49:36	0.025	0.025
17-Aug-2015	07:53:36	0.026	0.026
17-Aug-2015	07:57:36	0.028	0.027
17-Aug-2015	08:01:36	0.028	0.029
17-Aug-2015	08:05:36	0.030	0.030
17-Aug-2015	08:09:36	0.031	0.030

DUST MONITORING

August 2015

shading indicates values over the threshold

Monitor: 2

Threshold: 0.15 (mg/m^3)

Date	Time	Value (mg/m^3)	TWA (mg/m^3)
17-Aug-2015	08:13:36	0.030	0.030
17-Aug-2015	08:17:36	0.030	0.030
17-Aug-2015	08:21:36	0.029	0.030
17-Aug-2015	08:25:36	0.031	0.030
17-Aug-2015	08:29:36	0.030	0.031
17-Aug-2015	08:33:36	0.031	0.031
17-Aug-2015	08:37:36	0.031	0.031
17-Aug-2015	08:41:36	0.031	0.031
17-Aug-2015	08:45:36	0.031	0.031
17-Aug-2015	08:49:36	0.031	0.031
17-Aug-2015	08:53:36	0.030	0.031
17-Aug-2015	08:57:36	0.032	0.031
17-Aug-2015	09:01:36	0.031	0.031
17-Aug-2015	09:05:36	0.029	0.030
17-Aug-2015	09:09:36	0.029	0.031
17-Aug-2015	09:13:36	0.034	0.030
17-Aug-2015	09:17:36	0.027	0.030
17-Aug-2015	09:21:36	0.028	0.030
17-Aug-2015	09:25:36	0.034	0.030
17-Aug-2015	09:29:36	0.027	0.033
17-Aug-2015	09:33:36	0.039	0.031
17-Aug-2015	09:37:36	0.026	0.030
17-Aug-2015	09:41:36	0.025	0.026
17-Aug-2015	09:45:36	0.026	0.025
17-Aug-2015	09:49:36	0.025	0.026
17-Aug-2015	09:53:36	0.026	0.026
17-Aug-2015	09:57:36	0.027	0.027
17-Aug-2015	10:01:36	0.027	0.027
17-Aug-2015	10:05:36	0.026	0.026
17-Aug-2015	10:09:36	0.024	0.025
17-Aug-2015	10:13:36	0.026	0.026
17-Aug-2015	10:17:36	0.027	0.026
17-Aug-2015	10:21:36	0.026	0.027
17-Aug-2015	10:25:36	0.028	0.029
17-Aug-2015	10:29:36	0.034	0.030
17-Aug-2015	10:33:36	0.028	0.029
17-Aug-2015	10:37:36	0.026	0.028
17-Aug-2015	10:41:36	0.030	0.028
17-Aug-2015	10:45:36	0.028	0.035
17-Aug-2015	10:49:36	0.046	0.034
17-Aug-2015	10:53:36	0.028	0.033

DUST MONITORING

August 2015

shading indicates values over the threshold

Monitor: 2

Threshold: 0.15 (mg/m^3)

Date	Time	Value (mg/m^3)	TWA (mg/m^3)
17-Aug-2015	10:57:36	0.026	0.027
17-Aug-2015	11:01:36	0.027	0.029
17-Aug-2015	11:05:36	0.033	0.029
17-Aug-2015	11:09:36	0.026	0.029
17-Aug-2015	11:13:36	0.027	0.026
17-Aug-2015	11:17:36	0.025	0.030
17-Aug-2015	11:21:36	0.039	0.029
17-Aug-2015	11:25:36	0.023	0.029
17-Aug-2015	11:29:36	0.024	0.024
17-Aug-2015	11:33:36	0.024	0.024
17-Aug-2015	11:37:36	0.024	0.024
17-Aug-2015	11:41:36	0.025	0.024
17-Aug-2015	11:45:36	0.023	0.023
17-Aug-2015	11:49:36	0.022	0.023
17-Aug-2015	11:53:36	0.023	0.023
17-Aug-2015	11:57:36	0.023	0.023
17-Aug-2015	12:01:36	0.024	0.024
17-Aug-2015	12:05:36	0.024	0.023
17-Aug-2015	12:09:36	0.022	0.023
17-Aug-2015	12:13:36	0.022	0.023
17-Aug-2015	12:17:36	0.024	0.025
17-Aug-2015	12:21:36	0.028	0.030
17-Aug-2015	12:25:36	0.037	0.031
17-Aug-2015	12:29:36	0.027	0.040
17-Aug-2015	12:33:36	0.057	0.036
17-Aug-2015	12:37:36	0.025	0.036
17-Aug-2015	12:41:36	0.027	0.026
17-Aug-2015	12:45:36	0.025	0.026
17-Aug-2015	12:49:36	0.025	0.120
17-Aug-2015	12:53:36	0.310	0.147
17-Aug-2015	12:57:36	0.107	0.147
17-Aug-2015	13:01:36	0.024	0.053
17-Aug-2015	13:05:36	0.029	0.030
17-Aug-2015	13:09:36	0.037	0.032
17-Aug-2015	13:13:36	0.031	0.031
17-Aug-2015	13:17:36	0.026	0.029
17-Aug-2015	13:21:36	0.029	0.027
17-Aug-2015	13:25:36	0.025	0.026
17-Aug-2015	13:29:36	0.024	0.026
17-Aug-2015	13:33:36	0.028	0.025
17-Aug-2015	13:37:36	0.024	0.047

DUST MONITORING

August 2015

shading indicates values over the threshold

Monitor: 2

Threshold: 0.15 (mg/m^3)

Date	Time	Value (mg/m^3)	TWA (mg/m^3)
17-Aug-2015	13:41:36	0.090	0.046
17-Aug-2015	13:45:36	0.023	0.046
17-Aug-2015	13:49:36	0.024	0.024
17-Aug-2015	13:53:36	0.024	0.026
17-Aug-2015	13:57:36	0.029	0.026
17-Aug-2015	14:01:36	0.026	0.029
17-Aug-2015	14:05:36	0.031	0.029
17-Aug-2015	14:09:36	0.030	0.034
17-Aug-2015	14:13:36	0.040	0.035
17-Aug-2015	14:17:36	0.035	0.038
17-Aug-2015	14:21:36	0.038	0.035
17-Aug-2015	14:25:36	0.032	0.035
17-Aug-2015	14:29:36	0.034	0.031
17-Aug-2015	14:33:36	0.028	0.038
17-Aug-2015	14:37:36	0.052	0.041
17-Aug-2015	14:41:36	0.043	0.040
17-Aug-2015	14:45:36	0.026	0.031
17-Aug-2015	14:49:36	0.025	0.026
17-Aug-2015	14:53:36	0.027	0.041
17-Aug-2015	14:57:36	0.070	0.041
17-Aug-2015	15:01:36	0.027	0.049
17-Aug-2015	15:05:36	0.050	0.034
17-Aug-2015	15:09:36	0.026	0.035
17-Aug-2015	19:01:41	0.030	0.029
17-Aug-2015	19:05:41	0.032	0.031
17-Aug-2015	19:09:41	0.030	0.031
17-Aug-2015	19:13:41	0.031	0.032
17-Aug-2015	19:17:41	0.034	0.032
17-Aug-2015	19:21:41	0.032	0.033
17-Aug-2015	19:25:41	0.032	0.032
17-Aug-2015	19:29:41	0.032	0.034
17-Aug-2015	19:33:41	0.037	0.034
17-Aug-2015	19:37:41	0.032	0.034
17-Aug-2015	19:41:41	0.032	0.032
17-Aug-2015	19:45:41	0.032	0.032
17-Aug-2015	19:49:41	0.032	0.032
17-Aug-2015	19:53:41	0.032	0.031
17-Aug-2015	19:57:41	0.030	0.031
17-Aug-2015	20:01:41	0.031	0.030
17-Aug-2015	20:05:41	0.029	0.030
17-Aug-2015	20:09:41	0.029	0.029

DUST MONITORING

August 2015

shading indicates values over the threshold

Monitor: 2

Threshold: 0.15 (mg/m^3)

Date	Time	Value (mg/m^3)	TWA (mg/m^3)
17-Aug-2015	20:13:41	0.029	0.029
17-Aug-2015	20:17:41	0.029	0.029
17-Aug-2015	20:21:41	0.030	0.029
17-Aug-2015	20:25:41	0.029	0.029
17-Aug-2015	20:29:41	0.028	0.028
17-Aug-2015	20:33:41	0.028	0.028
17-Aug-2015	20:37:41	0.029	0.029
17-Aug-2015	20:41:41	0.029	0.029
17-Aug-2015	20:45:41	0.029	0.030
17-Aug-2015	20:49:41	0.031	0.030
17-Aug-2015	20:53:41	0.030	0.031
17-Aug-2015	20:57:41	0.031	0.030
17-Aug-2015	21:01:41	0.030	0.030
17-Aug-2015	21:05:41	0.030	0.030
17-Aug-2015	21:09:41	0.031	0.031
17-Aug-2015	21:13:41	0.031	0.031
17-Aug-2015	21:17:41	0.032	0.031
17-Aug-2015	21:21:41	0.031	0.032
17-Aug-2015	21:25:41	0.032	0.031
17-Aug-2015	21:29:41	0.031	0.031
17-Aug-2015	21:33:41	0.031	0.032
17-Aug-2015	21:37:41	0.033	0.031
17-Aug-2015	21:41:41	0.030	0.031
17-Aug-2015	21:45:41	0.031	0.031
17-Aug-2015	21:49:41	0.032	0.031
17-Aug-2015	21:53:41	0.031	0.032
17-Aug-2015	21:57:41	0.032	0.031
17-Aug-2015	22:01:41	0.031	0.032
17-Aug-2015	22:05:41	0.032	0.031
17-Aug-2015	22:09:41	0.031	0.031
17-Aug-2015	22:13:41	0.031	0.031
17-Aug-2015	22:17:41	0.031	0.031
17-Aug-2015	22:21:41	0.032	0.031
17-Aug-2015	22:25:41	0.030	0.031
17-Aug-2015	22:29:41	0.031	0.031
17-Aug-2015	22:33:41	0.031	0.031
17-Aug-2015	22:37:41	0.032	0.032
17-Aug-2015	22:41:41	0.032	0.032
17-Aug-2015	22:45:41	0.031	0.032
17-Aug-2015	22:49:41	0.032	0.031
17-Aug-2015	22:53:41	0.031	0.031

DUST MONITORING

August 2015

shading indicates values over the threshold

Monitor: 2

Threshold: 0.15 (mg/m^3)

Date	Time	Value (mg/m^3)	TWA (mg/m^3)
17-Aug-2015	22:57:41	0.031	0.031
17-Aug-2015	23:01:41	0.030	0.030
17-Aug-2015	23:05:41	0.030	0.031
17-Aug-2015	23:09:41	0.032	0.031
17-Aug-2015	23:13:41	0.030	0.031
17-Aug-2015	23:17:41	0.030	0.030
17-Aug-2015	23:21:41	0.031	0.030
17-Aug-2015	23:25:41	0.030	0.031
17-Aug-2015	23:29:41	0.031	0.030
17-Aug-2015	23:33:41	0.030	0.031
17-Aug-2015	23:37:41	0.031	0.031
17-Aug-2015	23:41:41	0.031	0.032
17-Aug-2015	23:45:41	0.033	0.032
17-Aug-2015	23:49:41	0.032	0.032
17-Aug-2015	23:53:41	0.031	0.031
17-Aug-2015	23:57:41	0.031	0.031
18-Aug-2015	00:01:41	0.030	0.031
18-Aug-2015	00:05:41	0.031	0.031
19-Aug-2015	09:22:15	0.032	0.045
19-Aug-2015	09:26:15	0.058	0.048
19-Aug-2015	09:30:15	0.054	0.053
19-Aug-2015	09:34:15	0.048	0.049
19-Aug-2015	09:38:15	0.045	0.046
19-Aug-2015	09:42:15	0.044	0.045
19-Aug-2015	09:46:15	0.046	0.045
19-Aug-2015	09:50:15	0.046	0.045
19-Aug-2015	09:54:15	0.044	0.043
19-Aug-2015	09:58:15	0.040	0.040
19-Aug-2015	10:02:15	0.037	0.038
19-Aug-2015	10:06:15	0.038	0.038
19-Aug-2015	10:10:15	0.038	0.037
19-Aug-2015	10:14:15	0.036	0.037
19-Aug-2015	10:18:15	0.038	0.037
19-Aug-2015	10:22:15	0.038	0.038
19-Aug-2015	10:26:15	0.039	0.038
19-Aug-2015	10:30:15	0.038	0.038
19-Aug-2015	10:34:15	0.038	0.038
19-Aug-2015	10:38:15	0.037	0.040
19-Aug-2015	11:36:28	0.045	0.041
19-Aug-2015	11:40:28	0.042	0.043
19-Aug-2015	11:44:28	0.041	0.041

DUST MONITORING

August 2015

shading indicates values over the threshold

Monitor: 2

Threshold: 0.15 (mg/m^3)

Date	Time	Value (mg/m^3)	TWA (mg/m^3)
19-Aug-2015	11:48:28	0.041	0.041
19-Aug-2015	11:52:28	0.041	0.042
19-Aug-2015	11:56:28	0.045	0.042
19-Aug-2015	12:00:28	0.041	0.042
19-Aug-2015	12:04:28	0.040	0.040
19-Aug-2015	12:08:28	0.039	0.040
19-Aug-2015	12:12:28	0.042	0.040
19-Aug-2015	12:16:28	0.039	0.039
19-Aug-2015	12:20:28	0.037	0.038
19-Aug-2015	12:24:28	0.038	0.038
19-Aug-2015	12:28:28	0.038	0.037
19-Aug-2015	12:32:28	0.036	0.039
19-Aug-2015	12:36:28	0.044	0.041
19-Aug-2015	12:40:28	0.042	0.040
19-Aug-2015	12:44:28	0.035	0.038
19-Aug-2015	12:48:28	0.038	0.034
19-Aug-2015	12:52:28	0.030	0.033
19-Aug-2015	12:56:28	0.030	0.030
19-Aug-2015	13:00:28	0.030	0.030
19-Aug-2015	13:04:28	0.030	0.030
19-Aug-2015	13:08:28	0.030	0.029
19-Aug-2015	13:12:28	0.028	0.029
19-Aug-2015	13:16:28	0.028	0.028
19-Aug-2015	13:20:28	0.029	0.029
19-Aug-2015	13:24:28	0.029	0.029
19-Aug-2015	13:28:28	0.029	0.028
19-Aug-2015	13:32:28	0.026	0.027
19-Aug-2015	13:36:28	0.027	0.026
19-Aug-2015	13:40:28	0.026	0.026
19-Aug-2015	13:44:28	0.026	0.026
19-Aug-2015	13:48:28	0.026	0.026
19-Aug-2015	13:52:28	0.026	0.026
19-Aug-2015	13:56:28	0.026	0.026
19-Aug-2015	14:00:28	0.025	0.025
19-Aug-2015	14:04:28	0.025	0.026
19-Aug-2015	14:08:28	0.029	0.027
19-Aug-2015	14:12:28	0.026	0.027
19-Aug-2015	14:16:28	0.025	0.026
19-Aug-2015	14:20:28	0.026	0.027
19-Aug-2015	14:24:28	0.031	0.029
19-Aug-2015	14:28:28	0.031	0.057

DUST MONITORING

August 2015

shading indicates values over the threshold

Monitor: 2

Threshold: 0.15 (mg/m^3)

Date	Time	Value (mg/m^3)	TWA (mg/m^3)
19-Aug-2015	14:32:28	0.108	0.055
19-Aug-2015	14:36:28	0.027	0.054
19-Aug-2015	14:40:28	0.026	0.028
19-Aug-2015	14:44:28	0.030	0.027
19-Aug-2015	14:48:28	0.025	0.027
19-Aug-2015	14:52:28	0.025	0.026
19-Aug-2015	14:56:28	0.029	0.027
19-Aug-2015	15:00:28	0.028	0.028
19-Aug-2015	15:04:28	0.026	0.027
19-Aug-2015	15:08:28	0.026	0.026
19-Aug-2015	15:12:28	0.025	0.026
19-Aug-2015	15:16:28	0.026	0.026
19-Aug-2015	15:20:28	0.027	0.027
19-Aug-2015	15:24:28	0.027	0.027
19-Aug-2015	15:28:28	0.027	0.028
19-Aug-2015	15:32:28	0.029	0.028
19-Aug-2015	15:36:28	0.028	0.028
19-Aug-2015	15:40:28	0.028	0.028
19-Aug-2015	15:44:28	0.028	0.028
19-Aug-2015	15:48:28	0.028	0.028
20-Aug-2015	10:31:13	0.018	0.018
20-Aug-2015	10:35:13	0.017	0.017
20-Aug-2015	10:39:13	0.016	0.016
20-Aug-2015	10:43:13	0.016	0.016
20-Aug-2015	10:47:13	0.015	0.016
20-Aug-2015	10:51:13	0.016	0.015
20-Aug-2015	10:55:13	0.013	0.014
20-Aug-2015	10:59:13	0.014	0.013
20-Aug-2015	11:03:13	0.013	0.013
20-Aug-2015	11:07:13	0.013	0.013
20-Aug-2015	11:11:13	0.012	0.012
20-Aug-2015	11:15:13	0.012	0.012
20-Aug-2015	11:19:13	0.011	0.012
20-Aug-2015	11:23:13	0.012	0.012
20-Aug-2015	11:27:13	0.014	0.013
20-Aug-2015	11:31:13	0.012	0.013
20-Aug-2015	11:35:13	0.014	0.013
20-Aug-2015	11:39:13	0.014	0.014
20-Aug-2015	11:43:13	0.014	0.014
20-Aug-2015	11:47:13	0.013	0.014
20-Aug-2015	11:51:13	0.014	0.014

DUST MONITORING

August 2015

shading indicates values over the threshold

Monitor: 2

Threshold: 0.15 (mg/m^3)

Date	Time	Value (mg/m^3)	TWA (mg/m^3)
20-Aug-2015	11:55:13	0.014	0.014
20-Aug-2015	11:59:13	0.014	0.014
20-Aug-2015	12:03:13	0.014	0.014
20-Aug-2015	12:07:13	0.013	0.014
20-Aug-2015	12:11:13	0.014	0.014
20-Aug-2015	12:15:13	0.014	0.014
20-Aug-2015	12:19:13	0.014	0.014
20-Aug-2015	12:23:13	0.014	0.014
20-Aug-2015	12:27:13	0.013	0.014
20-Aug-2015	12:31:13	0.014	0.014
20-Aug-2015	12:35:13	0.015	0.014
20-Aug-2015	12:39:13	0.014	0.014
20-Aug-2015	12:43:13	0.013	0.013
20-Aug-2015	12:47:13	0.013	0.013
20-Aug-2015	12:51:13	0.014	0.014
20-Aug-2015	12:55:13	0.015	0.015
20-Aug-2015	12:59:13	0.015	0.015
20-Aug-2015	13:03:13	0.015	0.015
20-Aug-2015	13:07:13	0.016	0.015
20-Aug-2015	13:11:13	0.014	0.015
20-Aug-2015	13:15:13	0.014	0.014
20-Aug-2015	13:19:13	0.015	0.015
20-Aug-2015	13:23:13	0.016	0.016
20-Aug-2015	13:27:13	0.016	0.016
20-Aug-2015	13:31:13	0.016	0.016
20-Aug-2015	13:35:13	0.015	0.015
20-Aug-2015	13:39:13	0.015	0.015
20-Aug-2015	13:43:13	0.015	0.015
20-Aug-2015	13:47:13	0.015	0.015
20-Aug-2015	13:51:13	0.015	0.016
20-Aug-2015	13:55:13	0.017	0.016
20-Aug-2015	13:59:13	0.017	0.017
20-Aug-2015	14:03:13	0.016	0.017
20-Aug-2015	14:07:13	0.017	0.016
20-Aug-2015	14:11:13	0.016	0.017
20-Aug-2015	14:15:13	0.017	0.017
20-Aug-2015	14:19:13	0.018	0.017
20-Aug-2015	14:23:13	0.017	0.018
20-Aug-2015	14:27:13	0.019	0.019
20-Aug-2015	14:31:13	0.022	0.019
20-Aug-2015	14:35:13	0.017	0.018

DUST MONITORING

August 2015

shading indicates values over the threshold

Monitor: 2

Threshold: 0.15 (mg/m^3)

Date	Time	Value (mg/m^3)	TWA (mg/m^3)
20-Aug-2015	14:39:13	0.016	0.016
20-Aug-2015	14:43:13	0.016	0.016
20-Aug-2015	14:47:13	0.015	0.016
21-Aug-2015	10:00:05	0.037	0.036
21-Aug-2015	10:04:05	0.035	0.035
21-Aug-2015	10:08:05	0.034	0.034
21-Aug-2015	10:12:05	0.034	0.034
21-Aug-2015	10:16:05	0.034	0.034
21-Aug-2015	10:20:05	0.034	0.033
21-Aug-2015	10:24:05	0.031	0.033
21-Aug-2015	10:28:05	0.033	0.032
21-Aug-2015	10:32:05	0.032	0.032
21-Aug-2015	10:36:05	0.031	0.032
21-Aug-2015	10:40:05	0.032	0.032
21-Aug-2015	10:44:05	0.032	0.032
21-Aug-2015	10:48:05	0.033	0.032
21-Aug-2015	10:52:05	0.031	0.032
21-Aug-2015	10:56:05	0.031	0.032
21-Aug-2015	11:00:05	0.033	0.031
21-Aug-2015	11:04:05	0.028	0.030
21-Aug-2015	11:08:05	0.030	0.028
21-Aug-2015	11:12:05	0.026	0.026
21-Aug-2015	11:16:05	0.023	0.024
21-Aug-2015	11:20:05	0.024	0.023
21-Aug-2015	11:24:05	0.022	0.023
21-Aug-2015	11:28:05	0.023	0.023
21-Aug-2015	11:32:05	0.023	0.023
21-Aug-2015	11:36:05	0.023	0.023
21-Aug-2015	11:40:05	0.022	0.023
21-Aug-2015	11:44:05	0.023	0.023
21-Aug-2015	11:48:05	0.023	0.023
21-Aug-2015	11:52:05	0.024	0.024
21-Aug-2015	11:56:05	0.025	0.024
21-Aug-2015	12:00:05	0.023	0.023
21-Aug-2015	12:04:05	0.022	0.022
21-Aug-2015	12:08:05	0.022	0.022
21-Aug-2015	12:12:05	0.022	0.022
21-Aug-2015	12:16:05	0.022	0.022
21-Aug-2015	12:20:05	0.022	0.022
21-Aug-2015	12:24:05	0.022	0.022
21-Aug-2015	12:28:05	0.021	0.022

DUST MONITORING

August 2015

shading indicates values over the threshold

Monitor: 2

Threshold: 0.15 (mg/m^3)

Date	Time	Value (mg/m^3)	TWA (mg/m^3)
21-Aug-2015	12:32:05	0.022	0.021
21-Aug-2015	12:36:05	0.021	0.021
21-Aug-2015	12:40:05	0.021	0.021
21-Aug-2015	12:44:05	0.020	0.020
21-Aug-2015	12:48:05	0.020	0.020
21-Aug-2015	12:52:05	0.021	0.021
21-Aug-2015	12:56:05	0.021	0.021
21-Aug-2015	13:00:05	0.021	0.021
21-Aug-2015	13:04:05	0.021	0.021
21-Aug-2015	13:08:05	0.021	0.021
21-Aug-2015	13:12:05	0.021	0.021
21-Aug-2015	13:16:05	0.022	0.021
21-Aug-2015	13:20:05	0.020	0.020
21-Aug-2015	13:24:05	0.019	0.020
21-Aug-2015	13:28:05	0.020	0.019
21-Aug-2015	13:32:05	0.019	0.020
21-Aug-2015	13:36:05	0.020	0.020
21-Aug-2015	13:40:05	0.021	0.020
21-Aug-2015	13:44:05	0.020	0.020
21-Aug-2015	13:48:05	0.020	0.020
21-Aug-2015	13:52:05	0.020	0.020
21-Aug-2015	13:56:05	0.020	0.020
21-Aug-2015	14:00:05	0.020	0.021
21-Aug-2015	14:04:05	0.022	0.021
21-Aug-2015	14:08:05	0.021	0.021
21-Aug-2015	14:12:05	0.020	0.020
21-Aug-2015	14:16:05	0.020	0.020
21-Aug-2015	14:20:05	0.020	0.020
21-Aug-2015	14:24:05	0.019	0.019
21-Aug-2015	14:28:05	0.019	0.019
21-Aug-2015	14:32:05	0.019	0.019
21-Aug-2015	14:36:05	0.019	0.019
21-Aug-2015	14:40:05	0.020	0.020
21-Aug-2015	14:44:05	0.020	0.020
21-Aug-2015	14:48:05	0.020	0.020
21-Aug-2015	14:52:05	0.019	0.019
21-Aug-2015	14:56:05	0.019	0.019
21-Aug-2015	15:00:05	0.019	0.019
21-Aug-2015	15:04:05	0.020	0.020
21-Aug-2015	15:08:05	0.020	0.020
21-Aug-2015	15:12:05	0.020	0.020

DUST MONITORING

August 2015

shading indicates values over the threshold

Monitor: 2

Threshold: 0.15 (mg/m^3)

Date	Time	Value (mg/m^3)	TWA (mg/m^3)
21-Aug-2015	15:16:05	0.020	0.020
21-Aug-2015	15:20:05	0.019	0.020
21-Aug-2015	15:24:05	0.020	0.021
21-Aug-2015	15:28:05	0.023	0.022
21-Aug-2015	15:32:05	0.024	0.024
21-Aug-2015	15:36:05	0.024	0.025
21-Aug-2015	15:40:05	0.027	0.026
21-Aug-2015	15:44:05	0.028	0.028
21-Aug-2015	15:48:05	0.030	0.030
21-Aug-2015	15:52:05	0.031	0.030
21-Aug-2015	15:56:05	0.029	0.030
21-Aug-2015	16:00:05	0.029	0.029
21-Aug-2015	16:04:05	0.030	0.029
21-Aug-2015	16:08:05	0.029	0.030
21-Aug-2015	16:12:05	0.030	0.029
21-Aug-2015	16:16:05	0.029	0.030
21-Aug-2015	16:20:05	0.030	0.031
21-Aug-2015	16:24:05	0.033	0.032
24-Aug-2015	08:21:30	0.079	0.078
24-Aug-2015	08:25:30	0.077	0.072
24-Aug-2015	08:29:30	0.061	0.066
24-Aug-2015	08:33:30	0.059	0.059
24-Aug-2015	08:37:30	0.058	0.058
24-Aug-2015	08:41:30	0.057	0.059
24-Aug-2015	08:45:30	0.063	0.061
24-Aug-2015	08:49:30	0.063	0.064
24-Aug-2015	08:53:30	0.066	0.067
24-Aug-2015	08:57:30	0.072	0.069
24-Aug-2015	09:01:30	0.069	0.069
24-Aug-2015	09:05:30	0.067	0.067
24-Aug-2015	09:09:30	0.066	0.066
24-Aug-2015	09:13:30	0.064	0.064
24-Aug-2015	09:17:30	0.063	0.063
24-Aug-2015	09:21:30	0.062	0.061
24-Aug-2015	09:25:30	0.058	0.059
24-Aug-2015	09:29:30	0.057	0.058
24-Aug-2015	09:33:30	0.058	0.055
24-Aug-2015	09:37:30	0.050	0.053
24-Aug-2015	09:41:30	0.051	0.050
24-Aug-2015	09:45:30	0.050	0.050
24-Aug-2015	09:49:30	0.050	0.049

DUST MONITORING

August 2015

shading indicates values over the threshold

Monitor: 2

Threshold: 0.15 (mg/m^3)

Date	Time	Value (mg/m^3)	TWA (mg/m^3)
24-Aug-2015	09:53:30	0.048	0.051
24-Aug-2015	09:57:30	0.055	0.053
24-Aug-2015	10:01:30	0.056	0.054
24-Aug-2015	10:05:30	0.052	0.052
24-Aug-2015	10:09:30	0.048	0.049
24-Aug-2015	10:13:30	0.047	0.047
24-Aug-2015	10:17:30	0.045	0.046
24-Aug-2015	10:21:30	0.047	0.046
24-Aug-2015	10:25:30	0.046	0.046
24-Aug-2015	10:29:30	0.045	0.045
24-Aug-2015	10:33:30	0.045	0.045
24-Aug-2015	10:37:30	0.045	0.045
24-Aug-2015	10:41:30	0.045	0.045
24-Aug-2015	10:45:30	0.044	0.044
24-Aug-2015	10:49:30	0.044	0.044
24-Aug-2015	10:53:30	0.045	0.045
24-Aug-2015	10:57:30	0.045	0.046
24-Aug-2015	11:01:30	0.049	0.048
24-Aug-2015	11:05:30	0.050	0.048
24-Aug-2015	11:09:30	0.046	0.047
24-Aug-2015	11:13:30	0.044	0.045
24-Aug-2015	11:17:30	0.044	0.044
24-Aug-2015	11:21:30	0.043	0.043
24-Aug-2015	11:25:30	0.043	0.043
24-Aug-2015	11:29:30	0.044	0.043
24-Aug-2015	11:33:30	0.043	0.042
24-Aug-2015	11:37:30	0.040	0.041
24-Aug-2015	11:41:30	0.040	0.040
24-Aug-2015	11:45:30	0.041	0.041
24-Aug-2015	11:49:30	0.041	0.041
24-Aug-2015	11:53:30	0.041	0.041
24-Aug-2015	11:57:30	0.040	0.040
24-Aug-2015	12:01:30	0.039	0.039
24-Aug-2015	12:05:30	0.039	0.040
24-Aug-2015	12:09:30	0.041	0.041
24-Aug-2015	12:13:30	0.042	0.042
24-Aug-2015	12:17:30	0.042	0.042
24-Aug-2015	12:21:30	0.041	0.041
24-Aug-2015	12:25:30	0.040	0.041
24-Aug-2015	12:29:30	0.041	0.040
24-Aug-2015	12:33:30	0.040	0.041

DUST MONITORING

August 2015

shading indicates values over the threshold

Monitor: 2

Threshold: 0.15 (mg/m^3)

Date	Time	Value (mg/m^3)	TWA (mg/m^3)
24-Aug-2015	12:37:30	0.041	0.041
24-Aug-2015	12:41:30	0.041	0.041
24-Aug-2015	12:45:30	0.041	0.041
24-Aug-2015	12:49:30	0.040	0.040
24-Aug-2015	12:53:30	0.040	0.040
24-Aug-2015	12:57:30	0.040	0.040
24-Aug-2015	13:01:30	0.040	0.040
24-Aug-2015	13:05:30	0.039	0.040
24-Aug-2015	13:09:30	0.040	0.040
25-Aug-2015	08:19:18	0.032	0.026
25-Aug-2015	08:23:18	0.019	0.024
25-Aug-2015	08:27:18	0.020	0.019
25-Aug-2015	08:31:18	0.019	0.020
25-Aug-2015	08:35:18	0.020	0.019
25-Aug-2015	08:39:18	0.017	0.019
25-Aug-2015	08:43:18	0.020	0.019
25-Aug-2015	08:47:18	0.020	0.019
25-Aug-2015	08:51:18	0.018	0.019
25-Aug-2015	08:55:18	0.018	0.018
25-Aug-2015	08:59:18	0.017	0.017
25-Aug-2015	09:03:18	0.017	0.017
25-Aug-2015	09:07:18	0.017	0.016
25-Aug-2015	09:11:18	0.015	0.016
25-Aug-2015	09:15:18	0.016	0.016
25-Aug-2015	09:19:18	0.016	0.017
25-Aug-2015	09:23:18	0.020	0.018
25-Aug-2015	09:27:18	0.017	0.018
25-Aug-2015	09:31:18	0.017	0.017
25-Aug-2015	09:35:18	0.018	0.018
25-Aug-2015	09:39:18	0.019	0.019
25-Aug-2015	09:43:18	0.020	0.018
25-Aug-2015	09:47:18	0.016	0.019
25-Aug-2015	09:51:18	0.021	0.018
25-Aug-2015	09:55:18	0.017	0.019
25-Aug-2015	09:59:18	0.019	0.018
25-Aug-2015	10:03:18	0.017	0.018
25-Aug-2015	10:07:18	0.018	0.017
25-Aug-2015	10:11:18	0.016	0.018
25-Aug-2015	10:15:18	0.019	0.020
25-Aug-2015	10:19:18	0.026	0.022
25-Aug-2015	10:23:18	0.020	0.022

DUST MONITORING

August 2015

shading indicates values over the threshold

Monitor: 2

Threshold: 0.15 (mg/m^3)

Date	Time	Value (mg/m^3)	TWA (mg/m^3)
25-Aug-2015	10:27:18	0.020	0.020
25-Aug-2015	10:31:18	0.020	0.020
25-Aug-2015	10:35:18	0.021	0.021
25-Aug-2015	10:39:18	0.022	0.020
25-Aug-2015	10:43:18	0.018	0.019
25-Aug-2015	10:47:18	0.017	0.018
25-Aug-2015	10:51:18	0.018	0.018
25-Aug-2015	10:55:18	0.019	0.018
25-Aug-2015	10:59:18	0.016	0.018
25-Aug-2015	11:03:18	0.020	0.020
25-Aug-2015	11:07:18	0.023	0.023
25-Aug-2015	11:11:18	0.025	0.023
25-Aug-2015	11:15:18	0.021	0.023
25-Aug-2015	11:19:18	0.023	0.022
25-Aug-2015	11:23:18	0.023	0.022
25-Aug-2015	11:27:18	0.021	0.021
25-Aug-2015	11:31:18	0.020	0.022
25-Aug-2015	11:35:18	0.024	0.020
25-Aug-2015	11:39:18	0.017	0.021
25-Aug-2015	11:43:18	0.022	0.023
25-Aug-2015	11:47:18	0.029	0.025
25-Aug-2015	11:51:18	0.024	0.025
25-Aug-2015	11:55:18	0.023	0.022
25-Aug-2015	11:59:18	0.018	0.020
25-Aug-2015	12:03:18	0.018	0.018
25-Aug-2015	12:07:18	0.018	0.018
25-Aug-2015	12:11:18	0.018	0.018
25-Aug-2015	12:15:18	0.019	0.022
25-Aug-2015	12:19:18	0.028	0.022
25-Aug-2015	12:23:18	0.020	0.023
25-Aug-2015	12:27:18	0.020	0.020
25-Aug-2015	12:31:18	0.020	0.021
25-Aug-2015	12:35:18	0.023	0.021
25-Aug-2015	12:39:18	0.021	0.021
25-Aug-2015	12:43:18	0.019	0.021
25-Aug-2015	12:47:18	0.023	0.021
25-Aug-2015	12:51:18	0.020	0.022
25-Aug-2015	12:55:18	0.022	0.021
25-Aug-2015	12:59:18	0.022	0.021
25-Aug-2015	13:03:18	0.018	0.020
25-Aug-2015	13:07:18	0.019	0.019

DUST MONITORING

August 2015

shading indicates values over the threshold

Monitor: 2

Threshold: 0.15 (mg/m^3)

Date	Time	Value (mg/m^3)	TWA (mg/m^3)
25-Aug-2015	13:11:18	0.021	0.020
25-Aug-2015	13:15:18	0.021	0.021
25-Aug-2015	13:19:18	0.020	0.021
25-Aug-2015	13:23:18	0.021	0.020
25-Aug-2015	13:27:18	0.020	0.020
25-Aug-2015	13:31:18	0.019	0.020
25-Aug-2015	13:35:18	0.020	0.020
25-Aug-2015	13:39:18	0.020	0.020
25-Aug-2015	13:43:18	0.019	0.019
25-Aug-2015	13:47:18	0.019	0.019
25-Aug-2015	13:51:18	0.020	0.035
25-Aug-2015	13:55:18	0.067	0.037
25-Aug-2015	13:59:18	0.023	0.037
25-Aug-2015	14:03:18	0.022	0.022
25-Aug-2015	14:07:18	0.021	0.022
25-Aug-2015	14:11:18	0.022	0.022
25-Aug-2015	14:15:18	0.022	0.023
25-Aug-2015	14:19:18	0.026	0.023
25-Aug-2015	14:23:18	0.021	0.023
25-Aug-2015	14:27:18	0.022	0.021
25-Aug-2015	14:31:18	0.021	0.021
25-Aug-2015	14:35:18	0.021	0.024
25-Aug-2015	14:39:18	0.030	0.028
25-Aug-2015	14:43:18	0.034	0.030
25-Aug-2015	14:47:18	0.025	0.028
25-Aug-2015	14:51:18	0.025	0.024
25-Aug-2015	14:55:18	0.022	0.023
25-Aug-2015	14:59:18	0.021	0.023
25-Aug-2015	15:03:18	0.025	0.023
25-Aug-2015	15:07:18	0.023	0.024
25-Aug-2015	15:11:18	0.023	0.023
25-Aug-2015	15:15:18	0.023	0.023
25-Aug-2015	15:19:18	0.022	0.023
25-Aug-2015	15:23:18	0.023	0.022
25-Aug-2015	15:27:18	0.021	0.022
25-Aug-2015	15:31:18	0.022	0.022
25-Aug-2015	15:35:18	0.022	0.022
25-Aug-2015	15:39:18	0.022	0.023
25-Aug-2015	15:43:18	0.024	0.023
25-Aug-2015	15:47:18	0.023	0.024
25-Aug-2015	15:51:18	0.024	0.023

DUST MONITORING

August 2015

shading indicates values over the threshold

Monitor: 2

Threshold: 0.15 (mg/m^3)

Date	Time	Value (mg/m^3)	TWA (mg/m^3)
25-Aug-2015	15:55:18	0.023	0.026
25-Aug-2015	15:59:18	0.031	0.028
25-Aug-2015	16:03:18	0.029	0.030
25-Aug-2015	16:07:18	0.029	0.028
25-Aug-2015	16:11:18	0.026	0.027
25-Aug-2015	16:15:18	0.025	0.025
25-Aug-2015	16:19:18	0.024	0.024
25-Aug-2015	16:23:18	0.024	0.023
25-Aug-2015	16:27:18	0.022	0.024
25-Aug-2015	16:31:18	0.025	0.024
25-Aug-2015	16:35:18	0.024	0.025
26-Aug-2015	10:12:47	0.023	0.025
26-Aug-2015	10:16:47	0.026	0.024
26-Aug-2015	10:20:47	0.023	0.023
26-Aug-2015	10:24:47	0.020	0.024
26-Aug-2015	10:28:47	0.028	0.024
26-Aug-2015	10:32:47	0.025	0.024
26-Aug-2015	10:36:47	0.018	0.020
26-Aug-2015	10:40:47	0.017	0.017
26-Aug-2015	10:44:47	0.015	0.016
26-Aug-2015	10:48:47	0.017	0.017
26-Aug-2015	10:52:47	0.018	0.017
26-Aug-2015	10:56:47	0.015	0.017
26-Aug-2015	11:00:47	0.019	0.016
26-Aug-2015	11:04:47	0.015	0.016
26-Aug-2015	11:08:47	0.014	0.015
26-Aug-2015	11:12:47	0.015	0.014
26-Aug-2015	11:16:47	0.014	0.014
26-Aug-2015	11:20:47	0.014	0.014
26-Aug-2015	11:24:47	0.015	0.016
26-Aug-2015	11:28:47	0.018	0.016
26-Aug-2015	11:32:47	0.015	0.016
26-Aug-2015	11:36:47	0.015	0.015
26-Aug-2015	11:40:47	0.015	0.015
26-Aug-2015	11:44:47	0.015	0.015
26-Aug-2015	11:48:47	0.015	0.015
26-Aug-2015	11:52:47	0.016	0.016
26-Aug-2015	11:56:47	0.016	0.016
26-Aug-2015	12:00:47	0.015	0.016
26-Aug-2015	12:04:47	0.016	0.016
26-Aug-2015	12:08:47	0.016	0.016

DUST MONITORING

August 2015

shading indicates values over the threshold

Monitor: 2

Threshold: 0.15 (mg/m^3)

Date	Time	Value (mg/m^3)	TWA (mg/m^3)
26-Aug-2015	12:12:47	0.016	0.016
26-Aug-2015	12:16:47	0.015	0.015
26-Aug-2015	12:20:47	0.015	0.015
26-Aug-2015	12:24:47	0.015	0.021
26-Aug-2015	12:28:47	0.034	0.027
26-Aug-2015	12:32:47	0.032	0.027
26-Aug-2015	12:36:47	0.016	0.026
26-Aug-2015	12:40:47	0.029	0.031
26-Aug-2015	12:44:47	0.047	0.037
26-Aug-2015	12:48:47	0.034	0.038
26-Aug-2015	12:52:47	0.033	0.030
26-Aug-2015	12:56:47	0.024	0.026
26-Aug-2015	13:00:47	0.020	0.020
26-Aug-2015	13:04:47	0.017	0.021
26-Aug-2015	13:08:47	0.025	0.021
26-Aug-2015	13:12:47	0.021	0.022
26-Aug-2015	13:16:47	0.019	0.022
26-Aug-2015	13:20:47	0.027	0.022
26-Aug-2015	13:24:47	0.020	0.026
26-Aug-2015	13:28:47	0.031	0.025
26-Aug-2015	13:32:47	0.024	0.029
26-Aug-2015	13:36:47	0.032	0.026
26-Aug-2015	13:40:47	0.022	0.029
26-Aug-2015	13:44:47	0.032	0.026
26-Aug-2015	13:48:47	0.024	0.026
26-Aug-2015	13:52:47	0.022	0.022
26-Aug-2015	13:56:47	0.019	0.023
26-Aug-2015	14:00:47	0.029	0.024
26-Aug-2015	14:04:47	0.025	0.026
26-Aug-2015	14:08:47	0.023	0.024
26-Aug-2015	14:12:47	0.023	0.022
26-Aug-2015	14:16:47	0.020	0.021
26-Aug-2015	14:20:47	0.021	0.020
26-Aug-2015	14:24:47	0.020	0.020
26-Aug-2015	14:28:47	0.019	0.019
26-Aug-2015	14:32:47	0.019	0.019
26-Aug-2015	14:36:47	0.020	0.020
26-Aug-2015	14:40:47	0.021	0.020
26-Aug-2015	14:44:47	0.020	0.020
26-Aug-2015	14:48:47	0.019	0.020
26-Aug-2015	14:52:47	0.020	0.019

DUST MONITORING

August 2015

shading indicates values over the threshold

Monitor: 2

Threshold: 0.15 (mg/m^3)

Date	Time	Value (mg/m^3)	TWA (mg/m^3)
26-Aug-2015	14:56:47	0.019	0.019
26-Aug-2015	15:00:47	0.019	0.019
26-Aug-2015	15:04:47	0.019	0.020
26-Aug-2015	15:08:47	0.021	0.021
26-Aug-2015	15:12:47	0.022	0.022
26-Aug-2015	15:16:47	0.023	0.022
26-Aug-2015	15:20:47	0.020	0.022
26-Aug-2015	15:24:47	0.023	0.021
26-Aug-2015	15:28:47	0.021	0.022
27-Aug-2015	08:58:19	0.001	0.001
27-Aug-2015	09:02:19	0.000	0.000
27-Aug-2015	09:06:19	0.000	0.000
27-Aug-2015	09:10:19	0.001	0.000
27-Aug-2015	09:14:19	0.000	0.000
27-Aug-2015	09:18:19	0.000	0.000
27-Aug-2015	09:22:19	0.000	0.000
27-Aug-2015	09:26:19	0.001	0.000
27-Aug-2015	09:30:19	0.000	0.000
27-Aug-2015	09:34:19	0.000	0.000
27-Aug-2015	09:38:19	0.000	0.000
27-Aug-2015	09:42:19	0.000	0.000
27-Aug-2015	09:46:19	0.000	0.000
27-Aug-2015	09:50:19	0.000	0.000
27-Aug-2015	09:54:19	0.001	0.000
27-Aug-2015	09:58:19	0.000	0.001
27-Aug-2015	10:02:19	0.001	0.001
27-Aug-2015	10:06:19	0.001	0.001
27-Aug-2015	10:10:19	0.001	0.001
27-Aug-2015	10:14:19	0.001	0.001
27-Aug-2015	10:18:19	0.001	0.001
27-Aug-2015	10:22:19	0.001	0.001
27-Aug-2015	10:26:19	0.001	0.001
27-Aug-2015	10:30:19	0.001	0.001
27-Aug-2015	10:34:19	0.001	0.001
27-Aug-2015	10:38:19	0.001	0.001
27-Aug-2015	10:42:19	0.002	0.001
27-Aug-2015	10:46:19	0.001	0.001
27-Aug-2015	10:50:19	0.001	0.001
27-Aug-2015	10:54:19	0.002	0.002
27-Aug-2015	10:58:19	0.002	0.002
27-Aug-2015	11:02:19	0.003	0.002

DUST MONITORING

August 2015

shading indicates values over the threshold

Monitor: 2

Threshold: 0.15 (mg/m^3)

Date	Time	Value (mg/m^3)	TWA (mg/m^3)
27-Aug-2015	11:06:19	0.002	0.002
27-Aug-2015	11:10:19	0.001	0.001
27-Aug-2015	11:14:19	0.001	0.001
27-Aug-2015	11:18:19	0.001	0.001
27-Aug-2015	11:22:19	0.001	0.001
27-Aug-2015	11:26:19	0.002	0.001
27-Aug-2015	11:30:19	0.001	0.002
27-Aug-2015	11:34:19	0.002	0.001
27-Aug-2015	11:38:19	0.001	0.001
27-Aug-2015	11:42:19	0.000	0.000
27-Aug-2015	11:46:19	0.000	0.000
27-Aug-2015	11:50:19	0.001	0.000
27-Aug-2015	11:54:19	0.000	0.000
27-Aug-2015	11:58:19	0.000	0.000
27-Aug-2015	12:02:19	0.000	0.000
27-Aug-2015	12:06:19	0.000	0.000
27-Aug-2015	12:10:19	0.000	0.000
27-Aug-2015	12:14:19	0.000	0.000
27-Aug-2015	12:18:19	0.000	0.000
27-Aug-2015	12:22:19	0.000	0.000
27-Aug-2015	12:26:19	0.000	0.000
27-Aug-2015	12:30:19	0.000	0.000
27-Aug-2015	12:34:19	0.000	0.000
27-Aug-2015	12:38:19	0.000	0.001
27-Aug-2015	12:42:19	0.002	0.001
27-Aug-2015	12:46:19	0.002	0.003
27-Aug-2015	12:50:19	0.005	0.016
27-Aug-2015	12:54:19	0.040	0.015
27-Aug-2015	12:58:19	0.001	0.026
27-Aug-2015	13:02:19	0.037	0.034
27-Aug-2015	13:06:19	0.063	0.043
27-Aug-2015	13:10:19	0.028	0.031
27-Aug-2015	13:14:19	0.002	0.021
27-Aug-2015	13:18:19	0.034	0.012
27-Aug-2015	13:22:19	0.000	0.011
27-Aug-2015	13:26:19	0.000	0.003
27-Aug-2015	13:30:19	0.009	0.003
27-Aug-2015	13:34:19	0.000	0.003
27-Aug-2015	13:38:19	0.000	0.000
27-Aug-2015	13:42:19	0.001	0.002
27-Aug-2015	13:46:19	0.006	0.005

DUST MONITORING

August 2015

shading indicates values over the threshold

Monitor: 2

Threshold: 0.15 (mg/m^3)

Date	Time	Value (mg/m^3)	TWA (mg/m^3)
27-Aug-2015	13:50:19	0.008	0.005
27-Aug-2015	13:54:19	0.001	0.003
27-Aug-2015	13:58:19	0.000	0.008
27-Aug-2015	14:02:19	0.024	0.013
27-Aug-2015	14:06:19	0.016	0.016
27-Aug-2015	14:10:19	0.008	0.016
27-Aug-2015	14:14:19	0.023	0.011
27-Aug-2015	14:18:19	0.001	0.008
27-Aug-2015	14:22:19	0.000	0.000
27-Aug-2015	14:26:19	0.000	0.000
27-Aug-2015	14:30:19	0.001	0.003
27-Aug-2015	14:34:19	0.009	0.005
27-Aug-2015	14:38:19	0.005	0.009
27-Aug-2015	14:42:19	0.012	0.007
27-Aug-2015	14:46:19	0.003	0.005
27-Aug-2015	14:50:19	0.000	0.002
27-Aug-2015	14:54:19	0.003	0.001
27-Aug-2015	14:58:19	0.001	0.002
27-Aug-2015	15:02:19	0.001	0.001
27-Aug-2015	15:06:19	0.001	0.010
27-Aug-2015	15:10:19	0.027	0.015
27-Aug-2015	15:14:19	0.018	0.015
27-Aug-2015	15:18:19	0.001	0.012
27-Aug-2015	15:22:19	0.018	0.007
27-Aug-2015	15:26:19	0.002	0.012
27-Aug-2015	15:30:19	0.015	0.006
27-Aug-2015	15:34:19	0.001	0.012
27-Aug-2015	15:38:19	0.019	0.012
27-Aug-2015	15:42:19	0.017	0.013
27-Aug-2015	15:46:19	0.003	0.008
27-Aug-2015	15:50:19	0.003	0.005
27-Aug-2015	15:54:19	0.009	0.005
27-Aug-2015	15:58:19	0.003	0.007
27-Aug-2015	16:02:19	0.010	0.005
27-Aug-2015	16:06:19	0.002	0.011
27-Aug-2015	16:10:19	0.022	0.013
27-Aug-2015	16:14:19	0.015	0.013
27-Aug-2015	16:18:19	0.003	0.007
27-Aug-2015	16:22:19	0.003	0.003
27-Aug-2015	16:26:19	0.004	0.004
27-Aug-2015	16:30:19	0.004	0.004

DUST MONITORING

August 2015

shading indicates values over the threshold

Monitor: 2

Threshold: 0.15 (mg/m^3)

Date	Time	Value (mg/m^3)	TWA (mg/m^3)
27-Aug-2015	16:34:19	0.004	0.004
28-Aug-2015	07:06:08	0.018	0.021
28-Aug-2015	07:10:08	0.024	0.024
28-Aug-2015	07:14:08	0.031	0.030
28-Aug-2015	07:18:08	0.034	0.032
28-Aug-2015	07:22:08	0.031	0.032
28-Aug-2015	07:26:08	0.030	0.030
28-Aug-2015	07:30:08	0.030	0.029
28-Aug-2015	07:34:08	0.028	0.029
28-Aug-2015	07:38:08	0.030	0.029
28-Aug-2015	07:42:08	0.030	0.030
28-Aug-2015	07:46:08	0.030	0.039
28-Aug-2015	07:50:08	0.058	0.038
28-Aug-2015	07:54:08	0.027	0.036
28-Aug-2015	07:58:08	0.023	0.024
28-Aug-2015	08:02:08	0.021	0.021
28-Aug-2015	08:06:08	0.020	0.021
28-Aug-2015	08:10:08	0.021	0.021
28-Aug-2015	08:14:08	0.023	0.023
28-Aug-2015	08:18:08	0.024	0.024
28-Aug-2015	08:22:08	0.025	0.025
28-Aug-2015	08:26:08	0.025	0.026
28-Aug-2015	08:30:08	0.027	0.027
28-Aug-2015	08:34:08	0.028	0.027
28-Aug-2015	08:38:08	0.026	0.027
28-Aug-2015	08:42:08	0.026	0.026
28-Aug-2015	08:46:08	0.026	0.026
28-Aug-2015	08:50:08	0.025	0.026
28-Aug-2015	08:54:08	0.026	0.033
28-Aug-2015	08:58:08	0.047	0.038
28-Aug-2015	09:02:08	0.040	0.037
28-Aug-2015	09:06:08	0.025	0.032
28-Aug-2015	09:10:08	0.031	0.028
28-Aug-2015	09:14:08	0.027	0.039
28-Aug-2015	09:18:08	0.058	0.043
31-Aug-2015	08:41:32	0.010	0.007
31-Aug-2015	08:45:32	0.004	0.006
31-Aug-2015	08:49:32	0.003	0.004
31-Aug-2015	08:53:32	0.004	0.005
31-Aug-2015	08:57:32	0.008	0.005
31-Aug-2015	09:01:32	0.003	0.004

DUST MONITORING

August 2015

shading indicates values over the threshold

Monitor: 2

Threshold: 0.15 (mg/m^3)

Date	Time	Value (mg/m^3)	TWA (mg/m^3)
31-Aug-2015	09:05:32	0.001	0.002
31-Aug-2015	09:09:32	0.001	0.001
31-Aug-2015	09:13:32	0.000	0.000
31-Aug-2015	09:17:32	0.000	0.000
31-Aug-2015	09:21:32	0.001	0.000
31-Aug-2015	09:25:32	0.000	0.000
31-Aug-2015	09:29:32	0.000	0.000
31-Aug-2015	09:33:32	0.000	0.000
31-Aug-2015	09:37:32	0.000	0.000
31-Aug-2015	09:41:32	0.000	0.000
31-Aug-2015	09:45:32	0.000	0.000
31-Aug-2015	09:49:32	0.000	0.000
31-Aug-2015	09:53:32	0.000	0.000
31-Aug-2015	09:57:32	0.000	0.000
31-Aug-2015	10:01:32	0.000	0.000
31-Aug-2015	10:05:32	0.000	0.000
31-Aug-2015	10:09:32	0.000	0.000
31-Aug-2015	10:13:32	0.000	0.000
31-Aug-2015	10:17:32	0.000	0.000
31-Aug-2015	10:21:32	0.000	0.000
31-Aug-2015	10:25:32	0.000	0.000
31-Aug-2015	10:29:32	0.000	0.000
31-Aug-2015	10:33:32	0.000	0.000
31-Aug-2015	10:37:32	0.000	0.000
31-Aug-2015	10:41:32	0.000	0.000
31-Aug-2015	10:45:32	0.000	0.000
31-Aug-2015	10:49:32	0.000	0.000
31-Aug-2015	10:53:32	0.000	0.000
31-Aug-2015	10:57:32	0.000	0.000
31-Aug-2015	11:01:32	0.000	0.000
31-Aug-2015	11:05:32	0.000	0.000
31-Aug-2015	11:09:32	0.000	0.000
31-Aug-2015	11:13:32	0.000	0.000
31-Aug-2015	11:17:32	0.000	0.000
31-Aug-2015	11:21:32	0.000	0.000
31-Aug-2015	11:25:32	0.000	0.000
31-Aug-2015	11:29:32	0.000	0.000
31-Aug-2015	11:33:32	0.000	0.000
31-Aug-2015	11:37:32	0.000	0.000
31-Aug-2015	11:41:32	0.000	0.000
31-Aug-2015	11:45:32	0.000	0.000

DUST MONITORING

August 2015

shading indicates values over the threshold

Monitor: 2

Threshold: 0.15 (mg/m^3)

Date	Time	Value (mg/m^3)	TWA (mg/m^3)
31-Aug-2015	11:49:32	0.001	0.000
31-Aug-2015	11:53:32	0.000	0.000
31-Aug-2015	11:57:32	0.000	0.000
31-Aug-2015	12:01:32	0.000	0.020
31-Aug-2015	12:05:32	0.060	0.028
31-Aug-2015	12:09:32	0.024	0.028
31-Aug-2015	12:13:32	0.000	0.029
31-Aug-2015	12:17:32	0.062	0.041
31-Aug-2015	12:21:32	0.060	0.048
31-Aug-2015	12:25:32	0.021	0.027
31-Aug-2015	12:29:32	0.000	0.008
31-Aug-2015	12:33:32	0.003	0.001
31-Aug-2015	12:37:32	0.001	0.012
31-Aug-2015	12:41:32	0.031	0.036
31-Aug-2015	12:45:32	0.076	0.063
31-Aug-2015	12:49:32	0.082	0.053
31-Aug-2015	12:53:32	0.000	0.027
31-Aug-2015	12:57:32	0.000	0.000
31-Aug-2015	13:01:32	0.000	0.000
31-Aug-2015	13:05:32	0.000	0.000
31-Aug-2015	13:09:32	0.000	0.000
31-Aug-2015	13:13:32	0.000	0.000
31-Aug-2015	13:17:32	0.000	0.000
31-Aug-2015	13:21:32	0.001	0.000
31-Aug-2015	13:25:32	0.000	0.000
31-Aug-2015	13:29:32	0.000	0.000
31-Aug-2015	13:33:32	0.000	0.000
31-Aug-2015	13:37:32	0.000	0.000
31-Aug-2015	13:41:32	0.000	0.000
31-Aug-2015	13:45:32	0.000	0.000
31-Aug-2015	13:49:32	0.000	0.000
31-Aug-2015	13:53:32	0.000	0.011
31-Aug-2015	13:57:32	0.034	0.015
31-Aug-2015	14:01:32	0.011	0.017
31-Aug-2015	14:05:32	0.006	0.006
31-Aug-2015	14:09:32	0.000	0.002
31-Aug-2015	14:13:32	0.000	0.000
31-Aug-2015	14:17:32	0.000	0.007
31-Aug-2015	14:21:32	0.022	0.012
31-Aug-2015	14:25:32	0.014	0.031
31-Aug-2015	14:29:32	0.058	0.024

DUST MONITORING

August 2015

shading indicates values over the threshold

Monitor: **2**

Threshold: **0.15 (mg/m^3)**

Date	Time	Value (mg/m^3)	TWA (mg/m^3)
31-Aug-2015	14:33:32	0.000	0.048
31-Aug-2015	14:37:32	0.086	0.121
31-Aug-2015	14:41:32	0.277	0.144
31-Aug-2015	14:45:32	0.069	0.176
31-Aug-2015	14:49:32	0.183	0.161
31-Aug-2015	14:53:32	0.230	0.159
31-Aug-2015	14:57:32	0.063	0.120
31-Aug-2015	15:01:32	0.068	0.083
31-Aug-2015	15:05:32	0.118	0.106
31-Aug-2015	15:09:32	0.132	0.120
31-Aug-2015	15:13:32	0.110	0.117
31-Aug-2015	15:17:32	0.110	0.106
31-Aug-2015	15:21:32	0.099	0.103
31-Aug-2015	15:25:32	0.099	0.099
31-Aug-2015	15:29:32	0.098	0.097
31-Aug-2015	15:33:32	0.095	0.092
31-Aug-2015	15:37:32	0.082	0.089

DUST MONITORING

August 2015

shading indicates values over the threshold

Monitor: 3

Threshold: 0.15 (mg/m^3)

Date	Time	Value (mg/m^3)	TWA (mg/m^3)
3-Aug-2015	11:10:36	0.000	0.000
3-Aug-2015	11:14:36	0.000	0.000
3-Aug-2015	11:18:36	0.000	0.000
3-Aug-2015	11:22:36	0.000	0.000
3-Aug-2015	11:26:36	0.000	0.000
3-Aug-2015	11:30:36	0.000	0.000
3-Aug-2015	11:34:36	0.000	0.000
3-Aug-2015	11:38:36	0.000	0.000
3-Aug-2015	11:42:36	0.000	0.000
3-Aug-2015	11:46:36	0.000	0.000
3-Aug-2015	11:50:36	0.000	0.000
3-Aug-2015	11:54:36	0.000	0.000
3-Aug-2015	11:58:36	0.000	0.000
3-Aug-2015	12:02:36	0.000	0.000
3-Aug-2015	12:06:36	0.000	0.000
3-Aug-2015	12:10:36	0.000	0.000
3-Aug-2015	12:14:36	0.000	0.000
3-Aug-2015	12:18:36	0.000	0.000
3-Aug-2015	12:22:36	0.000	0.000
3-Aug-2015	12:26:36	0.000	0.000
3-Aug-2015	12:30:36	0.000	0.000
3-Aug-2015	12:34:36	0.000	0.000
3-Aug-2015	12:38:36	0.000	0.000
3-Aug-2015	12:42:36	0.000	0.000
3-Aug-2015	12:46:36	0.000	0.000
3-Aug-2015	12:50:36	0.000	0.000
3-Aug-2015	12:54:36	0.000	0.000
3-Aug-2015	12:58:36	0.000	0.000
3-Aug-2015	13:02:36	0.000	0.000
3-Aug-2015	13:06:36	0.000	0.000
3-Aug-2015	13:10:36	0.001	0.000
3-Aug-2015	13:14:36	0.000	0.000
3-Aug-2015	13:18:36	0.000	0.000
3-Aug-2015	13:22:36	0.000	0.000
3-Aug-2015	13:26:36	0.000	0.000
3-Aug-2015	13:30:36	0.000	0.001
3-Aug-2015	13:34:36	0.003	0.001
3-Aug-2015	13:38:36	0.000	0.002
3-Aug-2015	13:42:36	0.003	0.001
3-Aug-2015	13:46:36	0.000	0.001
3-Aug-2015	13:50:36	0.000	0.000

DUST MONITORING

August 2015

shading indicates values over the threshold

Monitor: 3

Threshold: 0.15 (mg/m^3)

Date	Time	Value (mg/m^3)	TWA (mg/m^3)
3-Aug-2015	13:54:36	0.001	0.000
3-Aug-2015	13:58:36	0.000	0.001
3-Aug-2015	14:02:36	0.002	0.002
3-Aug-2015	14:06:36	0.004	0.002
3-Aug-2015	14:10:36	0.000	0.001
3-Aug-2015	14:14:36	0.000	0.000
3-Aug-2015	14:18:36	0.000	0.000
3-Aug-2015	14:22:36	0.000	0.000
3-Aug-2015	14:26:36	0.000	0.000
3-Aug-2015	14:30:36	0.000	0.000
3-Aug-2015	14:34:36	0.000	0.000
3-Aug-2015	14:38:36	0.000	0.000
3-Aug-2015	14:42:36	0.000	0.000
3-Aug-2015	14:46:36	0.000	0.000
3-Aug-2015	14:50:36	0.000	0.000
3-Aug-2015	14:54:36	0.001	0.000
3-Aug-2015	14:58:36	0.000	0.000
3-Aug-2015	15:02:36	0.000	0.000
3-Aug-2015	15:06:36	0.000	0.000
3-Aug-2015	15:10:36	0.000	0.000
3-Aug-2015	15:14:36	0.000	0.000
3-Aug-2015	15:18:36	0.000	0.000
3-Aug-2015	15:22:36	0.000	0.000
3-Aug-2015	15:26:36	0.000	0.000
3-Aug-2015	15:30:36	0.000	0.000
4-Aug-2015	07:55:24	0.025	0.024
4-Aug-2015	07:59:24	0.022	0.024
4-Aug-2015	08:03:24	0.026	0.020
4-Aug-2015	08:07:24	0.011	0.014
4-Aug-2015	08:11:24	0.006	0.007
4-Aug-2015	08:15:24	0.005	0.005
4-Aug-2015	08:19:24	0.004	0.004
4-Aug-2015	08:23:24	0.004	0.004
4-Aug-2015	08:27:24	0.003	0.003
4-Aug-2015	08:31:24	0.001	0.002
4-Aug-2015	08:35:24	0.003	0.002
4-Aug-2015	08:39:24	0.002	0.003
4-Aug-2015	08:43:24	0.005	0.005
4-Aug-2015	08:47:24	0.007	0.007
4-Aug-2015	08:51:24	0.008	0.008
4-Aug-2015	08:55:24	0.010	0.010

DUST MONITORING

August 2015

shading indicates values over the threshold

Monitor: 3

Threshold: 0.15 (mg/m^3)

Date	Time	Value (mg/m^3)	TWA (mg/m^3)
4-Aug-2015	08:59:24	0.011	0.011
4-Aug-2015	09:03:24	0.011	0.010
4-Aug-2015	09:07:24	0.009	0.010
4-Aug-2015	09:11:24	0.011	0.010
4-Aug-2015	09:15:24	0.010	0.010
4-Aug-2015	09:19:24	0.010	0.009
4-Aug-2015	09:23:24	0.008	0.009
4-Aug-2015	09:27:24	0.008	0.008
4-Aug-2015	09:31:24	0.008	0.008
4-Aug-2015	09:35:24	0.008	0.008
4-Aug-2015	09:39:24	0.009	0.009
4-Aug-2015	09:43:24	0.010	0.009
4-Aug-2015	09:47:24	0.009	0.009
4-Aug-2015	09:51:24	0.009	0.009
4-Aug-2015	09:55:24	0.008	0.009
4-Aug-2015	09:59:24	0.009	0.009
4-Aug-2015	10:03:24	0.009	0.009
4-Aug-2015	10:07:24	0.008	0.008
4-Aug-2015	10:11:24	0.006	0.007
4-Aug-2015	10:15:24	0.006	0.006
4-Aug-2015	10:19:24	0.007	0.006
4-Aug-2015	10:23:24	0.006	0.006
4-Aug-2015	10:27:24	0.005	0.006
4-Aug-2015	10:31:24	0.006	0.006
4-Aug-2015	10:35:24	0.006	0.007
4-Aug-2015	10:39:24	0.010	0.007
4-Aug-2015	10:43:24	0.004	0.005
4-Aug-2015	10:47:24	0.002	0.003
4-Aug-2015	10:51:24	0.002	0.004
4-Aug-2015	10:55:24	0.008	0.006
4-Aug-2015	10:59:24	0.007	0.008
4-Aug-2015	11:03:24	0.010	0.009
4-Aug-2015	11:07:24	0.010	0.009
4-Aug-2015	11:11:24	0.006	0.007
4-Aug-2015	11:15:24	0.006	0.006
4-Aug-2015	11:19:24	0.007	0.007
4-Aug-2015	11:23:24	0.007	0.007
4-Aug-2015	11:27:24	0.007	0.007
4-Aug-2015	11:31:24	0.007	0.007
4-Aug-2015	11:35:24	0.008	0.008
4-Aug-2015	11:39:24	0.008	0.008

DUST MONITORING

August 2015

shading indicates values over the threshold

Monitor: 3

Threshold: 0.15 (mg/m^3)

Date	Time	Value (mg/m^3)	TWA (mg/m^3)
4-Aug-2015	11:43:24	0.009	0.009
4-Aug-2015	11:47:24	0.009	0.008
4-Aug-2015	11:51:24	0.006	0.009
4-Aug-2015	11:55:24	0.011	0.010
4-Aug-2015	11:59:24	0.014	0.012
4-Aug-2015	12:03:24	0.010	0.013
4-Aug-2015	12:07:24	0.014	0.011
4-Aug-2015	12:11:24	0.010	0.012
4-Aug-2015	12:15:24	0.011	0.010
4-Aug-2015	12:19:24	0.010	0.011
4-Aug-2015	12:23:24	0.011	0.011
4-Aug-2015	12:27:24	0.012	0.012
4-Aug-2015	12:31:24	0.013	0.012
4-Aug-2015	12:35:24	0.010	0.012
4-Aug-2015	12:39:24	0.012	0.011
4-Aug-2015	12:43:24	0.011	0.011
4-Aug-2015	12:47:24	0.010	0.010
4-Aug-2015	12:51:24	0.010	0.010
4-Aug-2015	12:55:24	0.010	0.009
4-Aug-2015	12:59:24	0.008	0.008
4-Aug-2015	13:03:24	0.006	0.009
4-Aug-2015	13:07:24	0.012	0.012
4-Aug-2015	13:11:24	0.017	0.015
4-Aug-2015	13:15:24	0.016	0.015
4-Aug-2015	13:19:24	0.011	0.012
4-Aug-2015	13:23:24	0.010	0.010
4-Aug-2015	13:27:24	0.009	0.010
4-Aug-2015	13:31:24	0.010	0.010
4-Aug-2015	13:35:24	0.010	0.010
4-Aug-2015	13:39:24	0.009	0.009
4-Aug-2015	13:43:24	0.008	0.010
4-Aug-2015	13:47:24	0.012	0.011
4-Aug-2015	13:51:24	0.012	0.012
4-Aug-2015	13:55:24	0.012	0.011
4-Aug-2015	13:59:24	0.009	0.010
4-Aug-2015	14:03:24	0.010	0.010
4-Aug-2015	14:07:24	0.010	0.012
4-Aug-2015	14:11:24	0.016	0.013
4-Aug-2015	14:15:24	0.013	0.013
4-Aug-2015	14:19:24	0.010	0.010
4-Aug-2015	14:23:24	0.008	0.009

DUST MONITORING

August 2015

shading indicates values over the threshold

Monitor: 3

Threshold: 0.15 (mg/m^3)

Date	Time	Value (mg/m^3)	TWA (mg/m^3)
4-Aug-2015	14:27:24	0.008	0.013
4-Aug-2015	14:31:24	0.022	0.014
4-Aug-2015	14:35:24	0.012	0.015
4-Aug-2015	14:39:24	0.010	0.010
4-Aug-2015	14:43:24	0.007	0.007
4-Aug-2015	14:47:24	0.005	0.006
4-Aug-2015	14:51:24	0.006	0.008
4-Aug-2015	14:55:24	0.012	0.010
4-Aug-2015	14:59:24	0.011	0.011
4-Aug-2015	15:03:24	0.011	0.018
4-Aug-2015	15:07:24	0.031	0.019
4-Aug-2015	15:11:24	0.014	0.021
4-Aug-2015	15:15:24	0.017	0.017
4-Aug-2015	15:19:24	0.019	0.016
4-Aug-2015	15:23:24	0.012	0.015
4-Aug-2015	15:27:24	0.014	0.014
4-Aug-2015	15:31:24	0.015	0.015
4-Aug-2015	15:35:24	0.017	0.014
4-Aug-2015	15:39:24	0.011	0.012
4-Aug-2015	15:43:24	0.008	0.009
4-Aug-2015	15:47:24	0.009	0.009
4-Aug-2015	15:51:24	0.009	0.013
4-Aug-2015	15:55:24	0.021	0.015
5-Aug-2015	08:11:14	0.029	0.030
5-Aug-2015	08:15:14	0.030	0.031
5-Aug-2015	08:19:14	0.033	0.033
5-Aug-2015	08:23:14	0.037	0.033
5-Aug-2015	08:27:14	0.029	0.030
5-Aug-2015	08:31:14	0.024	0.027
5-Aug-2015	08:35:14	0.027	0.026
5-Aug-2015	08:39:14	0.026	0.026
5-Aug-2015	08:43:14	0.025	0.025
5-Aug-2015	08:47:14	0.024	0.025
5-Aug-2015	08:51:14	0.026	0.025
5-Aug-2015	08:55:14	0.026	0.026
5-Aug-2015	08:59:14	0.027	0.030
5-Aug-2015	09:03:14	0.036	0.030
5-Aug-2015	09:07:14	0.026	0.030
5-Aug-2015	09:11:14	0.029	0.027
5-Aug-2015	09:15:14	0.027	0.032
5-Aug-2015	09:19:14	0.039	0.033

DUST MONITORING

August 2015

shading indicates values over the threshold

Monitor: 3

Threshold: 0.15 (mg/m^3)

Date	Time	Value (mg/m^3)	TWA (mg/m^3)
5-Aug-2015	09:23:14	0.032	0.033
5-Aug-2015	09:27:14	0.028	0.030
5-Aug-2015	09:31:14	0.030	0.029
5-Aug-2015	09:35:14	0.028	0.029
5-Aug-2015	09:39:14	0.030	0.029
6-Aug-2015	08:46:27	0.000	0.000
6-Aug-2015	08:50:27	0.000	0.000
6-Aug-2015	08:54:27	0.000	0.000
6-Aug-2015	08:58:27	0.000	0.000
6-Aug-2015	09:02:27	0.000	0.000
6-Aug-2015	09:06:27	0.000	0.001
6-Aug-2015	09:10:27	0.003	0.003
6-Aug-2015	09:14:27	0.006	0.020
6-Aug-2015	09:18:27	0.051	0.026
6-Aug-2015	09:22:27	0.022	0.025
6-Aug-2015	09:26:27	0.002	0.009
6-Aug-2015	09:30:27	0.004	0.002
6-Aug-2015	09:34:27	0.000	0.006
6-Aug-2015	09:38:27	0.014	0.005
6-Aug-2015	09:42:27	0.000	0.005
6-Aug-2015	09:46:27	0.000	0.000
6-Aug-2015	09:50:27	0.000	0.001
6-Aug-2015	09:54:27	0.002	0.002
6-Aug-2015	09:58:27	0.005	0.003
6-Aug-2015	10:02:27	0.001	0.003
6-Aug-2015	10:06:27	0.002	0.003
6-Aug-2015	10:10:27	0.005	0.015
6-Aug-2015	10:14:27	0.038	0.047
6-Aug-2015	10:18:27	0.099	0.046
6-Aug-2015	10:22:27	0.002	0.034
6-Aug-2015	10:26:27	0.000	0.001
6-Aug-2015	10:30:27	0.000	0.000
6-Aug-2015	10:34:27	0.000	0.000
6-Aug-2015	10:38:27	0.000	0.000
6-Aug-2015	10:42:27	0.000	0.002
6-Aug-2015	10:46:27	0.005	0.002
6-Aug-2015	10:50:27	0.000	0.002
6-Aug-2015	10:54:27	0.001	0.030
6-Aug-2015	10:58:27	0.088	0.057
6-Aug-2015	11:02:27	0.083	0.073
6-Aug-2015	11:06:27	0.048	0.066

DUST MONITORING

August 2015

shading indicates values over the threshold

Monitor: 3

Threshold: 0.15 (mg/m^3)

Date	Time	Value (mg/m^3)	TWA (mg/m^3)
10-Aug-2015	07:51:45	0.046	0.053
10-Aug-2015	07:55:45	0.059	0.058
10-Aug-2015	07:59:45	0.069	0.061
10-Aug-2015	08:03:45	0.055	0.059
10-Aug-2015	08:07:45	0.054	0.052
10-Aug-2015	08:11:45	0.047	0.047
10-Aug-2015	08:15:45	0.041	0.047
10-Aug-2015	08:19:45	0.053	0.043
10-Aug-2015	08:23:45	0.035	0.041
10-Aug-2015	08:27:45	0.035	0.038
10-Aug-2015	08:31:45	0.045	0.043
10-Aug-2015	08:35:45	0.049	0.044
10-Aug-2015	08:39:45	0.038	0.041
10-Aug-2015	08:43:45	0.035	0.038
10-Aug-2015	08:47:45	0.042	0.038
10-Aug-2015	08:51:45	0.038	0.040
10-Aug-2015	08:55:45	0.040	0.053
10-Aug-2015	08:59:45	0.080	0.052
10-Aug-2015	09:03:45	0.037	0.052
10-Aug-2015	09:07:45	0.038	0.038
10-Aug-2015	09:11:45	0.038	0.044
10-Aug-2015	09:15:45	0.055	0.044
10-Aug-2015	09:19:45	0.039	0.043
10-Aug-2015	09:23:45	0.036	0.041
10-Aug-2015	09:27:45	0.048	0.040
10-Aug-2015	09:31:45	0.036	0.041
10-Aug-2015	09:35:45	0.040	0.043
10-Aug-2015	09:39:45	0.054	0.047
10-Aug-2015	09:43:45	0.047	0.049
10-Aug-2015	09:47:45	0.045	0.050
10-Aug-2015	09:51:45	0.057	0.067
10-Aug-2015	09:55:45	0.099	0.077
10-Aug-2015	09:59:45	0.076	0.079
10-Aug-2015	10:03:45	0.062	0.076
10-Aug-2015	10:07:45	0.090	0.069
10-Aug-2015	10:11:45	0.054	0.070
10-Aug-2015	10:15:45	0.066	0.056
10-Aug-2015	10:19:45	0.047	0.067
10-Aug-2015	10:23:45	0.089	0.064
10-Aug-2015	10:27:45	0.056	0.063
10-Aug-2015	10:31:45	0.045	0.053

DUST MONITORING

August 2015

shading indicates values over the threshold

Monitor: 3

Threshold: 0.15 (mg/m^3)

Date	Time	Value (mg/m^3)	TWA (mg/m^3)
10-Aug-2015	10:35:45	0.058	0.055
10-Aug-2015	10:39:45	0.063	0.059
10-Aug-2015	10:43:45	0.056	0.060
10-Aug-2015	10:47:45	0.061	0.057
10-Aug-2015	10:51:45	0.053	0.055
10-Aug-2015	10:55:45	0.050	0.050
10-Aug-2015	10:59:45	0.048	0.053
10-Aug-2015	11:03:45	0.062	0.055
10-Aug-2015	11:07:45	0.055	0.058
10-Aug-2015	11:11:45	0.056	0.054
10-Aug-2015	11:15:45	0.050	0.051
10-Aug-2015	11:19:45	0.048	0.053
10-Aug-2015	11:23:45	0.061	0.056
10-Aug-2015	11:27:45	0.058	0.059
10-Aug-2015	11:31:45	0.057	0.059
10-Aug-2015	11:35:45	0.061	0.058
10-Aug-2015	11:39:45	0.057	0.058
10-Aug-2015	11:43:45	0.055	0.056
10-Aug-2015	11:47:45	0.056	0.056
10-Aug-2015	11:51:45	0.056	0.056
10-Aug-2015	11:55:45	0.055	0.056
10-Aug-2015	11:59:45	0.058	0.055
10-Aug-2015	12:03:45	0.053	0.058
10-Aug-2015	12:07:45	0.062	0.058
10-Aug-2015	12:11:45	0.059	0.062
10-Aug-2015	12:15:45	0.064	0.060
10-Aug-2015	12:19:45	0.058	0.062
10-Aug-2015	12:23:45	0.063	0.060
10-Aug-2015	12:27:45	0.058	0.059
10-Aug-2015	12:31:45	0.057	0.058
10-Aug-2015	12:35:45	0.058	0.058
10-Aug-2015	12:39:45	0.058	0.060
10-Aug-2015	12:43:45	0.063	0.059
10-Aug-2015	12:47:45	0.057	0.060
10-Aug-2015	12:51:45	0.059	0.061
10-Aug-2015	12:55:45	0.068	0.060
10-Aug-2015	12:59:45	0.053	0.058
10-Aug-2015	13:03:45	0.052	0.052
10-Aug-2015	13:07:45	0.051	0.052
10-Aug-2015	13:11:45	0.053	0.053
10-Aug-2015	13:15:45	0.055	0.054

DUST MONITORING

August 2015

shading indicates values over the threshold

Monitor: 3

Threshold: 0.15 (mg/m^3)

Date	Time	Value (mg/m^3)	TWA (mg/m^3)
10-Aug-2015	13:19:45	0.055	0.056
10-Aug-2015	13:23:45	0.057	0.056
10-Aug-2015	13:27:45	0.057	0.057
10-Aug-2015	13:31:45	0.056	0.056
10-Aug-2015	13:35:45	0.055	0.055
10-Aug-2015	13:39:45	0.055	0.057
10-Aug-2015	13:43:45	0.061	0.057
10-Aug-2015	13:47:45	0.054	0.057
10-Aug-2015	13:51:45	0.057	0.055
10-Aug-2015	13:55:45	0.054	0.055
10-Aug-2015	13:59:45	0.053	0.055
10-Aug-2015	14:03:45	0.059	0.055
10-Aug-2015	14:07:45	0.054	0.065
10-Aug-2015	14:11:45	0.083	0.064
10-Aug-2015	14:15:45	0.054	0.064
10-Aug-2015	14:19:45	0.056	0.060
10-Aug-2015	14:23:45	0.070	0.062
10-Aug-2015	14:27:45	0.059	0.062
10-Aug-2015	14:31:45	0.058	0.056
10-Aug-2015	14:35:45	0.052	0.062
10-Aug-2015	14:39:45	0.076	0.062
10-Aug-2015	14:43:45	0.058	0.065
10-Aug-2015	14:47:45	0.062	0.059
10-Aug-2015	14:51:45	0.058	0.060
10-Aug-2015	14:55:45	0.059	0.058
10-Aug-2015	14:59:45	0.058	0.059
10-Aug-2015	15:03:45	0.059	0.058
10-Aug-2015	15:07:45	0.058	0.045
10-Aug-2015	15:15:45	0.017	0.031
10-Aug-2015	15:19:45	0.019	0.016
10-Aug-2015	15:23:45	0.012	0.015
10-Aug-2015	15:27:45	0.014	0.014
10-Aug-2015	15:31:45	0.015	0.015
10-Aug-2015	15:35:45	0.017	0.014
10-Aug-2015	15:39:45	0.011	0.012
10-Aug-2015	15:43:45	0.008	0.009
10-Aug-2015	15:47:45	0.009	0.009
10-Aug-2015	15:51:45	0.009	0.013
10-Aug-2015	15:55:45	0.021	0.015
11-Aug-2015	07:57:03	0.026	0.027
11-Aug-2015	08:01:03	0.027	0.027

DUST MONITORING

August 2015

shading indicates values over the threshold

Monitor: 3

Threshold: 0.15 (mg/m^3)

Date	Time	Value (mg/m^3)	TWA (mg/m^3)
11-Aug-2015	08:05:03	0.029	0.029
11-Aug-2015	08:09:03	0.030	0.029
11-Aug-2015	08:13:03	0.029	0.030
11-Aug-2015	08:17:03	0.030	0.030
11-Aug-2015	08:21:03	0.031	0.031
11-Aug-2015	08:25:03	0.031	0.031
11-Aug-2015	08:29:03	0.032	0.032
11-Aug-2015	08:33:03	0.034	0.032
11-Aug-2015	08:37:03	0.031	0.032
11-Aug-2015	08:41:03	0.031	0.031
11-Aug-2015	08:45:03	0.031	0.030
11-Aug-2015	08:49:03	0.029	0.029
11-Aug-2015	08:53:03	0.028	0.029
11-Aug-2015	08:57:03	0.030	0.030
11-Aug-2015	09:01:03	0.031	0.031
11-Aug-2015	09:05:03	0.031	0.030
11-Aug-2015	09:09:03	0.029	0.029
11-Aug-2015	09:13:03	0.027	0.028
11-Aug-2015	09:17:03	0.029	0.028
11-Aug-2015	09:21:03	0.029	0.030
11-Aug-2015	09:25:03	0.031	0.031
11-Aug-2015	09:29:03	0.032	0.031
11-Aug-2015	09:33:03	0.031	0.032
11-Aug-2015	09:37:03	0.032	0.031
11-Aug-2015	09:41:03	0.031	0.032
11-Aug-2015	09:45:03	0.032	0.031
11-Aug-2015	09:49:03	0.031	0.031
11-Aug-2015	09:53:03	0.031	0.031
11-Aug-2015	09:57:03	0.032	0.032
11-Aug-2015	10:01:03	0.033	0.033
11-Aug-2015	10:05:03	0.033	0.033
11-Aug-2015	10:09:03	0.032	0.032
11-Aug-2015	10:13:03	0.032	0.032
11-Aug-2015	10:17:03	0.032	0.032
11-Aug-2015	10:21:03	0.033	0.033
11-Aug-2015	10:25:03	0.034	0.033
11-Aug-2015	10:29:03	0.033	0.034
11-Aug-2015	10:33:03	0.034	0.034
11-Aug-2015	10:37:03	0.034	0.035
11-Aug-2015	10:41:03	0.036	0.035
11-Aug-2015	10:45:03	0.035	0.035

DUST MONITORING

August 2015

shading indicates values over the threshold

Monitor: 3

Threshold: 0.15 (mg/m^3)

Date	Time	Value (mg/m^3)	TWA (mg/m^3)
11-Aug-2015	10:49:03	0.034	0.035
11-Aug-2015	10:53:03	0.037	0.036
11-Aug-2015	10:57:03	0.036	0.037
11-Aug-2015	11:01:03	0.039	0.038
11-Aug-2015	11:05:03	0.038	0.038
11-Aug-2015	11:09:03	0.037	0.037
11-Aug-2015	11:13:03	0.036	0.037
11-Aug-2015	11:17:03	0.037	0.036
11-Aug-2015	11:21:03	0.036	0.037
11-Aug-2015	11:25:03	0.039	0.038
11-Aug-2015	11:29:03	0.038	0.037
11-Aug-2015	11:33:03	0.035	0.035
11-Aug-2015	11:37:03	0.033	0.034
11-Aug-2015	11:41:03	0.034	0.033
11-Aug-2015	11:45:03	0.033	0.034
11-Aug-2015	11:49:03	0.035	0.037
11-Aug-2015	11:53:03	0.043	0.039
11-Aug-2015	11:57:03	0.039	0.039
11-Aug-2015	12:01:03	0.035	0.037
11-Aug-2015	12:05:03	0.037	0.037
11-Aug-2015	12:09:03	0.039	0.038
12-Aug-2015	09:54:38	0.005	0.003
12-Aug-2015	09:58:38	0.000	0.002
12-Aug-2015	10:02:38	0.000	0.000
12-Aug-2015	10:06:38	0.000	0.001
12-Aug-2015	10:10:38	0.002	0.001
12-Aug-2015	10:14:38	0.000	0.001
12-Aug-2015	10:18:38	0.000	0.001
12-Aug-2015	10:22:38	0.002	0.001
12-Aug-2015	10:26:38	0.001	0.002
12-Aug-2015	10:30:38	0.003	0.001
12-Aug-2015	10:34:38	0.000	0.001
12-Aug-2015	10:38:38	0.000	0.005
12-Aug-2015	10:42:38	0.015	0.005
12-Aug-2015	10:46:38	0.000	0.005
12-Aug-2015	10:50:38	0.000	0.000
12-Aug-2015	10:54:38	0.000	0.000
12-Aug-2015	10:58:38	0.000	0.000
12-Aug-2015	11:02:38	0.001	0.000
12-Aug-2015	11:06:38	0.000	0.000
12-Aug-2015	11:10:38	0.000	0.000

DUST MONITORING

August 2015

shading indicates values over the threshold

Monitor: 3

Threshold: 0.15 (mg/m^3)

Date	Time	Value (mg/m^3)	TWA (mg/m^3)
12-Aug-2015	11:14:38	0.000	0.000
12-Aug-2015	11:18:38	0.001	0.001
12-Aug-2015	11:22:38	0.002	0.001
12-Aug-2015	11:26:38	0.000	0.001
12-Aug-2015	11:30:38	0.001	0.003
12-Aug-2015	11:34:38	0.008	0.003
12-Aug-2015	11:38:38	0.000	0.003
12-Aug-2015	11:42:38	0.001	0.000
12-Aug-2015	11:46:38	0.000	0.000
12-Aug-2015	11:50:38	0.000	0.000
12-Aug-2015	11:54:38	0.000	0.000
12-Aug-2015	11:58:38	0.000	0.000
12-Aug-2015	12:02:38	0.001	0.000
12-Aug-2015	12:06:38	0.000	0.000
12-Aug-2015	12:10:38	0.000	0.000
12-Aug-2015	12:14:38	0.000	0.000
12-Aug-2015	12:18:38	0.000	0.000
12-Aug-2015	12:22:38	0.000	0.000
12-Aug-2015	12:26:38	0.000	0.000
12-Aug-2015	12:30:38	0.000	0.000
12-Aug-2015	12:34:38	0.000	0.000
12-Aug-2015	12:38:38	0.001	0.000
12-Aug-2015	12:42:38	0.000	0.000
12-Aug-2015	12:46:38	0.000	0.004
12-Aug-2015	12:50:38	0.011	0.004
12-Aug-2015	12:54:38	0.000	0.004
12-Aug-2015	12:58:38	0.001	0.000
12-Aug-2015	13:02:38	0.000	0.002
12-Aug-2015	13:06:38	0.004	0.001
12-Aug-2015	13:10:38	0.000	0.001
12-Aug-2015	13:14:38	0.000	0.000
12-Aug-2015	13:18:38	0.001	0.000
12-Aug-2015	13:22:38	0.000	0.000
12-Aug-2015	13:26:38	0.000	0.000
12-Aug-2015	13:30:38	0.000	0.000
12-Aug-2015	13:34:38	0.000	0.000
12-Aug-2015	13:38:38	0.000	0.000
12-Aug-2015	13:42:38	0.000	0.000
12-Aug-2015	13:46:38	0.000	0.000
12-Aug-2015	13:50:38	0.000	0.000
12-Aug-2015	13:54:38	0.000	0.000

DUST MONITORING

August 2015

shading indicates values over the threshold

Monitor: 3

Threshold: 0.15 (mg/m^3)

Date	Time	Value (mg/m^3)	TWA (mg/m^3)
12-Aug-2015	13:58:38	0.000	0.000
12-Aug-2015	14:02:38	0.000	0.000
12-Aug-2015	14:06:38	0.000	0.000
12-Aug-2015	14:10:38	0.000	0.000
12-Aug-2015	14:14:38	0.000	0.000
12-Aug-2015	14:18:38	0.000	0.000
12-Aug-2015	14:22:38	0.000	0.000
12-Aug-2015	14:26:38	0.000	0.000
12-Aug-2015	14:30:38	0.001	0.000
12-Aug-2015	14:34:38	0.000	0.001
12-Aug-2015	14:38:38	0.001	0.002
12-Aug-2015	14:42:38	0.005	0.003
12-Aug-2015	14:46:38	0.004	0.003
12-Aug-2015	14:50:38	0.000	0.001
12-Aug-2015	14:54:38	0.000	0.000
12-Aug-2015	14:58:38	0.000	0.000
12-Aug-2015	15:02:38	0.000	0.002
12-Aug-2015	15:06:38	0.005	0.002
12-Aug-2015	15:10:38	0.000	0.002
12-Aug-2015	15:14:38	0.000	0.002
12-Aug-2015	15:18:38	0.007	0.004
14-Aug-2015	07:14:45	0.011	0.011
14-Aug-2015	07:18:45	0.010	0.009
14-Aug-2015	07:22:45	0.007	0.007
14-Aug-2015	07:26:45	0.005	0.005
14-Aug-2015	07:30:45	0.004	0.004
14-Aug-2015	07:34:45	0.003	0.003
14-Aug-2015	07:38:45	0.001	0.002
14-Aug-2015	07:42:45	0.001	0.001
14-Aug-2015	07:46:45	0.000	0.000
14-Aug-2015	07:50:45	0.000	0.000
14-Aug-2015	07:54:45	0.001	0.000
14-Aug-2015	07:58:45	0.000	0.000
14-Aug-2015	08:02:45	0.000	0.000
14-Aug-2015	08:06:45	0.000	0.000
14-Aug-2015	08:10:45	0.000	0.000
14-Aug-2015	08:14:45	0.000	0.000
14-Aug-2015	08:18:45	0.000	0.000
14-Aug-2015	08:22:45	0.000	0.000
14-Aug-2015	08:26:45	0.000	0.000
14-Aug-2015	08:30:45	0.000	0.000

DUST MONITORING

August 2015

shading indicates values over the threshold

Monitor: 3

Threshold: 0.15 (mg/m^3)

Date	Time	Value (mg/m^3)	TWA (mg/m^3)
14-Aug-2015	08:34:45	0.000	0.000
14-Aug-2015	08:38:45	0.000	0.000
14-Aug-2015	08:42:45	0.000	0.000
14-Aug-2015	08:46:45	0.000	0.000
14-Aug-2015	08:50:45	0.000	0.000
14-Aug-2015	08:54:45	0.000	0.000
14-Aug-2015	08:58:45	0.000	0.001
14-Aug-2015	09:02:45	0.002	0.001
14-Aug-2015	09:06:45	0.000	0.001
14-Aug-2015	09:10:45	0.000	0.000
14-Aug-2015	09:14:45	0.000	0.000
14-Aug-2015	09:18:45	0.000	0.000
14-Aug-2015	09:22:45	0.000	0.000
14-Aug-2015	09:26:45	0.000	0.000
14-Aug-2015	09:30:45	0.000	0.000
14-Aug-2015	09:34:45	0.001	0.001
14-Aug-2015	09:38:45	0.002	0.004
14-Aug-2015	09:42:45	0.008	0.005
14-Aug-2015	09:46:45	0.006	0.006
14-Aug-2015	09:50:45	0.005	0.005
14-Aug-2015	09:54:45	0.004	0.005
14-Aug-2015	09:58:45	0.007	0.005
14-Aug-2015	10:02:45	0.004	0.005
14-Aug-2015	10:06:45	0.003	0.004
14-Aug-2015	10:10:45	0.004	0.003
14-Aug-2015	10:14:45	0.003	0.004
14-Aug-2015	10:18:45	0.004	0.003
14-Aug-2015	10:22:45	0.002	0.002
14-Aug-2015	10:26:45	0.000	0.001
14-Aug-2015	10:30:45	0.001	0.001
14-Aug-2015	10:34:45	0.001	0.001
14-Aug-2015	10:38:45	0.001	0.001
14-Aug-2015	10:42:45	0.002	0.002
14-Aug-2015	10:46:45	0.002	0.007
14-Aug-2015	10:50:45	0.017	0.008
14-Aug-2015	10:54:45	0.004	0.016
14-Aug-2015	10:58:45	0.026	0.018
14-Aug-2015	11:02:45	0.024	0.024
14-Aug-2015	11:06:45	0.021	0.025
14-Aug-2015	11:10:45	0.029	0.026
14-Aug-2015	11:14:45	0.029	0.029

DUST MONITORING

August 2015

shading indicates values over the threshold

Monitor: 3

Threshold: 0.15 (mg/m^3)

Date	Time	Value (mg/m^3)	TWA (mg/m^3)
14-Aug-2015	11:18:45	0.029	0.027
14-Aug-2015	11:22:45	0.024	0.024
14-Aug-2015	11:26:45	0.020	0.021
14-Aug-2015	11:30:45	0.018	0.018
14-Aug-2015	11:34:45	0.015	0.016
14-Aug-2015	11:38:45	0.016	0.018
14-Aug-2015	11:42:45	0.023	0.020
14-Aug-2015	11:46:45	0.020	0.021
14-Aug-2015	11:50:45	0.021	0.023
14-Aug-2015	11:54:45	0.029	0.026
14-Aug-2015	11:58:45	0.028	0.026
14-Aug-2015	12:02:45	0.021	0.020
14-Aug-2015	12:06:45	0.012	0.012
14-Aug-2015	12:10:45	0.004	0.006
14-Aug-2015	12:14:45	0.001	0.002
14-Aug-2015	12:18:45	0.002	0.001
14-Aug-2015	12:22:45	0.000	0.001
14-Aug-2015	12:26:45	0.000	0.000
14-Aug-2015	12:30:45	0.000	0.000
14-Aug-2015	12:34:45	0.000	0.000
14-Aug-2015	12:38:45	0.000	0.000
14-Aug-2015	12:42:45	0.000	0.000
14-Aug-2015	12:46:45	0.000	0.000
14-Aug-2015	12:50:45	0.000	0.000
14-Aug-2015	12:54:45	0.000	0.000
14-Aug-2015	12:58:45	0.000	0.000
14-Aug-2015	13:02:45	0.000	0.000
14-Aug-2015	13:06:45	0.000	0.000
14-Aug-2015	13:10:45	0.000	0.000
14-Aug-2015	13:14:45	0.000	0.000
14-Aug-2015	13:18:45	0.000	0.000
14-Aug-2015	13:22:45	0.000	0.000
14-Aug-2015	13:26:45	0.000	0.000
14-Aug-2015	13:30:45	0.000	0.000
14-Aug-2015	13:34:45	0.000	0.000
14-Aug-2015	13:38:45	0.000	0.000
14-Aug-2015	13:42:45	0.000	0.000
18-Aug-2015	06:54:18	0.002	0.002
18-Aug-2015	06:58:18	0.002	0.002
18-Aug-2015	07:02:18	0.001	0.001
18-Aug-2015	07:06:18	0.001	0.001

DUST MONITORING

August 2015

shading indicates values over the threshold

Monitor: 3

Threshold: 0.15 (mg/m^3)

Date	Time	Value (mg/m^3)	TWA (mg/m^3)
19-Aug-2015	11:37:16	0.000	0.000
19-Aug-2015	11:41:16	0.000	0.000
19-Aug-2015	11:45:16	0.000	0.000
19-Aug-2015	11:49:16	0.000	0.000
19-Aug-2015	11:53:16	0.000	0.000
19-Aug-2015	11:57:16	0.000	0.000
19-Aug-2015	12:01:16	0.000	0.000
19-Aug-2015	12:05:16	0.001	0.000
19-Aug-2015	12:09:16	0.000	0.000
19-Aug-2015	12:13:16	0.000	0.000
19-Aug-2015	12:17:16	0.001	0.000
19-Aug-2015	12:21:16	0.000	0.000
19-Aug-2015	12:25:16	0.000	0.000
19-Aug-2015	12:29:16	0.000	0.000
19-Aug-2015	12:33:16	0.000	0.000
19-Aug-2015	12:37:16	0.000	0.000
19-Aug-2015	12:41:16	0.000	0.000
19-Aug-2015	12:45:16	0.001	0.000
19-Aug-2015	12:49:16	0.000	0.000
19-Aug-2015	12:53:16	0.000	0.000
19-Aug-2015	12:57:16	0.000	0.000
19-Aug-2015	13:01:16	0.000	0.000
19-Aug-2015	13:05:16	0.000	0.000
19-Aug-2015	13:09:16	0.000	0.000
19-Aug-2015	13:13:16	0.000	0.000
19-Aug-2015	13:17:16	0.000	0.000
19-Aug-2015	13:21:16	0.000	0.000
19-Aug-2015	13:25:16	0.000	0.000
19-Aug-2015	13:29:16	0.000	0.000
19-Aug-2015	13:33:16	0.000	0.000
19-Aug-2015	13:37:16	0.000	0.000
19-Aug-2015	13:41:16	0.000	0.000
19-Aug-2015	13:45:16	0.000	0.000
19-Aug-2015	13:49:16	0.000	0.000
19-Aug-2015	13:53:16	0.000	0.000
19-Aug-2015	13:57:16	0.000	0.000
19-Aug-2015	14:01:16	0.000	0.000
19-Aug-2015	14:05:16	0.000	0.000
20-Aug-2015	10:32:51	0.001	0.001
20-Aug-2015	10:36:51	0.000	0.000
20-Aug-2015	10:40:51	0.000	0.000

DUST MONITORING

August 2015

shading indicates values over the threshold

Monitor: 3

Threshold: 0.15 (mg/m^3)

Date	Time	Value (mg/m^3)	TWA (mg/m^3)
20-Aug-2015	10:44:51	0.000	0.000
20-Aug-2015	10:48:51	0.001	0.000
20-Aug-2015	10:52:51	0.000	0.000
20-Aug-2015	10:56:51	0.000	0.000
20-Aug-2015	11:00:51	0.000	0.000
20-Aug-2015	11:04:51	0.000	0.000
20-Aug-2015	11:08:51	0.000	0.000
20-Aug-2015	11:12:51	0.000	0.000
20-Aug-2015	11:16:51	0.000	0.000
20-Aug-2015	11:20:51	0.000	0.000
20-Aug-2015	11:24:51	0.000	0.000
20-Aug-2015	11:28:51	0.000	0.000
20-Aug-2015	11:32:51	0.000	0.000
20-Aug-2015	11:36:51	0.000	0.000
20-Aug-2015	11:40:51	0.000	0.000
20-Aug-2015	11:44:51	0.000	0.000
20-Aug-2015	11:48:51	0.000	0.000
20-Aug-2015	11:52:51	0.000	0.000
20-Aug-2015	11:56:51	0.000	0.000
20-Aug-2015	12:00:51	0.000	0.000
20-Aug-2015	12:04:51	0.000	0.000
20-Aug-2015	12:08:51	0.000	0.000
20-Aug-2015	12:12:51	0.000	0.000
20-Aug-2015	12:16:51	0.000	0.000
20-Aug-2015	12:20:51	0.000	0.000
20-Aug-2015	12:24:51	0.000	0.000
20-Aug-2015	12:28:51	0.000	0.000
20-Aug-2015	12:32:51	0.000	0.000
20-Aug-2015	12:36:51	0.000	0.000
20-Aug-2015	12:40:51	0.000	0.000
20-Aug-2015	12:44:51	0.000	0.000
20-Aug-2015	12:48:51	0.000	0.000
20-Aug-2015	12:52:51	0.000	0.000
20-Aug-2015	12:56:51	0.000	0.001
20-Aug-2015	13:00:51	0.002	0.001
20-Aug-2015	13:04:51	0.000	0.001
20-Aug-2015	13:08:51	0.000	0.000
20-Aug-2015	13:12:51	0.000	0.000
20-Aug-2015	13:16:51	0.000	0.000
20-Aug-2015	13:20:51	0.000	0.000
20-Aug-2015	13:24:51	0.000	0.000

DUST MONITORING

August 2015

shading indicates values over the threshold

Monitor: 3

Threshold: 0.15 (mg/m^3)

Date	Time	Value (mg/m^3)	TWA (mg/m^3)
20-Aug-2015	13:28:51	0.000	0.000
20-Aug-2015	13:32:51	0.000	0.000
20-Aug-2015	13:36:51	0.000	0.000
20-Aug-2015	13:40:51	0.000	0.000
20-Aug-2015	13:44:51	0.000	0.000
20-Aug-2015	13:48:51	0.000	0.000
20-Aug-2015	13:52:51	0.000	0.000
20-Aug-2015	13:56:51	0.000	0.000
20-Aug-2015	14:00:51	0.000	0.000
20-Aug-2015	14:04:51	0.000	0.000
20-Aug-2015	14:08:51	0.000	0.000
20-Aug-2015	14:12:51	0.000	0.000
20-Aug-2015	14:16:51	0.000	0.000
20-Aug-2015	14:20:51	0.000	0.000
20-Aug-2015	14:24:51	0.000	0.000
20-Aug-2015	14:28:51	0.000	0.000
20-Aug-2015	14:32:51	0.000	0.000
20-Aug-2015	14:36:51	0.000	0.000
20-Aug-2015	14:40:51	0.000	0.000
20-Aug-2015	14:44:51	0.000	0.000
21-Aug-2015	10:01:23	0.002	0.001
21-Aug-2015	10:05:23	0.000	0.001
21-Aug-2015	10:09:23	0.000	0.000
21-Aug-2015	10:13:23	0.000	0.000
21-Aug-2015	10:17:23	0.000	0.000
21-Aug-2015	10:21:23	0.000	0.000
21-Aug-2015	10:25:23	0.000	0.000
21-Aug-2015	10:29:23	0.000	0.000
21-Aug-2015	10:33:23	0.001	0.000
21-Aug-2015	10:37:23	0.000	0.000
21-Aug-2015	10:41:23	0.000	0.000
21-Aug-2015	10:45:23	0.000	0.000
21-Aug-2015	10:49:23	0.000	0.000
21-Aug-2015	10:53:23	0.000	0.000
21-Aug-2015	10:57:23	0.000	0.000
21-Aug-2015	11:01:23	0.000	0.000
21-Aug-2015	11:05:23	0.000	0.000
21-Aug-2015	11:09:23	0.000	0.000
21-Aug-2015	11:13:23	0.000	0.000
21-Aug-2015	11:17:23	0.000	0.000
21-Aug-2015	11:21:23	0.000	0.000

DUST MONITORING

August 2015

shading indicates values over the threshold

Monitor: 3

Threshold: 0.15 (mg/m^3)

Date	Time	Value (mg/m^3)	TWA (mg/m^3)
21-Aug-2015	11:25:23	0.000	0.000
21-Aug-2015	11:29:23	0.000	0.000
21-Aug-2015	11:33:23	0.000	0.000
21-Aug-2015	11:37:23	0.000	0.000
21-Aug-2015	11:41:23	0.000	0.000
21-Aug-2015	11:45:23	0.000	0.000
21-Aug-2015	11:49:23	0.000	0.000
21-Aug-2015	11:53:23	0.000	0.000
21-Aug-2015	11:57:23	0.000	0.000
21-Aug-2015	12:01:23	0.000	0.000
21-Aug-2015	12:05:23	0.000	0.000
21-Aug-2015	12:09:23	0.000	0.000
21-Aug-2015	12:13:23	0.000	0.000
21-Aug-2015	12:17:23	0.000	0.000
21-Aug-2015	12:21:23	0.000	0.000
21-Aug-2015	12:25:23	0.000	0.000
21-Aug-2015	12:29:23	0.000	0.000
21-Aug-2015	12:33:23	0.000	0.000
21-Aug-2015	12:37:23	0.000	0.000
21-Aug-2015	12:41:23	0.000	0.000
21-Aug-2015	12:45:23	0.000	0.000
21-Aug-2015	12:49:23	0.000	0.000
21-Aug-2015	12:53:23	0.000	0.000
21-Aug-2015	12:57:23	0.000	0.000
21-Aug-2015	13:01:23	0.000	0.000
21-Aug-2015	13:05:23	0.000	0.000
21-Aug-2015	13:09:23	0.000	0.000
21-Aug-2015	13:13:23	0.000	0.000
21-Aug-2015	13:17:23	0.000	0.000
21-Aug-2015	13:21:23	0.000	0.000
21-Aug-2015	13:25:23	0.000	0.000
21-Aug-2015	13:29:23	0.000	0.000
21-Aug-2015	13:33:23	0.000	0.000
21-Aug-2015	13:37:23	0.000	0.000
21-Aug-2015	13:41:23	0.000	0.000
21-Aug-2015	13:45:23	0.000	0.000
21-Aug-2015	13:49:23	0.000	0.000
21-Aug-2015	13:53:23	0.000	0.000
21-Aug-2015	13:57:23	0.000	0.000
21-Aug-2015	14:01:23	0.000	0.000
21-Aug-2015	14:05:23	0.000	0.000

DUST MONITORING

August 2015

shading indicates values over the threshold

Monitor: 3

Threshold: 0.15 (mg/m^3)

Date	Time	Value (mg/m^3)	TWA (mg/m^3)
21-Aug-2015	14:09:23	0.000	0.000
21-Aug-2015	14:13:23	0.000	0.000
21-Aug-2015	14:17:23	0.000	0.000
21-Aug-2015	14:21:23	0.000	0.000
21-Aug-2015	14:25:23	0.000	0.000
21-Aug-2015	14:29:23	0.000	0.000
21-Aug-2015	14:33:23	0.000	0.000
21-Aug-2015	14:37:23	0.000	0.000
21-Aug-2015	14:41:23	0.000	0.000
21-Aug-2015	14:45:23	0.000	0.000
21-Aug-2015	14:49:23	0.000	0.000
21-Aug-2015	14:53:23	0.000	0.000
21-Aug-2015	14:57:23	0.000	0.000
21-Aug-2015	15:01:23	0.000	0.000
21-Aug-2015	15:05:23	0.000	0.000
21-Aug-2015	15:09:23	0.000	0.000
21-Aug-2015	15:13:23	0.000	0.000
21-Aug-2015	15:17:23	0.000	0.000
21-Aug-2015	15:21:23	0.000	0.000
21-Aug-2015	15:25:23	0.001	0.000
21-Aug-2015	15:29:23	0.000	0.000
21-Aug-2015	15:33:23	0.000	0.000
21-Aug-2015	15:37:23	0.000	0.000
21-Aug-2015	15:41:23	0.000	0.000
21-Aug-2015	15:45:23	0.000	0.000
21-Aug-2015	15:49:23	0.000	0.000
21-Aug-2015	15:53:23	0.000	0.001
21-Aug-2015	15:57:23	0.003	0.001
21-Aug-2015	16:01:23	0.000	0.001
21-Aug-2015	16:05:23	0.001	0.000
21-Aug-2015	16:09:23	0.000	0.000
21-Aug-2015	16:13:23	0.000	0.002
21-Aug-2015	16:17:23	0.006	0.002
21-Aug-2015	16:21:23	0.000	0.003
21-Aug-2015	16:25:23	0.002	0.001
24-Aug-2015	08:30:44	0.027	0.025
24-Aug-2015	08:34:44	0.023	0.023
24-Aug-2015	08:38:44	0.020	0.021
24-Aug-2015	08:42:44	0.020	0.021
24-Aug-2015	08:46:44	0.024	0.022
24-Aug-2015	08:50:44	0.022	0.022

DUST MONITORING

August 2015

shading indicates values over the threshold

Monitor: 3

Threshold: 0.15 (mg/m^3)

Date	Time	Value (mg/m^3)	TWA (mg/m^3)
24-Aug-2015	08:54:44	0.021	0.024
24-Aug-2015	08:58:44	0.029	0.025
24-Aug-2015	09:02:44	0.025	0.025
24-Aug-2015	09:06:44	0.021	0.023
24-Aug-2015	09:10:44	0.022	0.021
24-Aug-2015	09:14:44	0.020	0.021
24-Aug-2015	09:18:44	0.021	0.019
24-Aug-2015	09:22:44	0.017	0.018
24-Aug-2015	09:26:44	0.015	0.016
24-Aug-2015	09:30:44	0.016	0.015
24-Aug-2015	09:34:44	0.013	0.013
24-Aug-2015	09:38:44	0.010	0.011
24-Aug-2015	09:42:44	0.010	0.010
24-Aug-2015	09:46:44	0.009	0.009
24-Aug-2015	09:50:44	0.008	0.009
24-Aug-2015	09:54:44	0.010	0.010
24-Aug-2015	09:58:44	0.013	0.013
24-Aug-2015	10:02:44	0.017	0.014
24-Aug-2015	10:06:44	0.013	0.013
24-Aug-2015	10:10:44	0.009	0.010
24-Aug-2015	10:14:44	0.008	0.008
24-Aug-2015	10:18:44	0.008	0.007
24-Aug-2015	10:22:44	0.006	0.007
24-Aug-2015	10:26:44	0.008	0.006
24-Aug-2015	10:30:44	0.005	0.006
24-Aug-2015	10:34:44	0.005	0.005
24-Aug-2015	10:38:44	0.005	0.005
24-Aug-2015	10:42:44	0.004	0.004
24-Aug-2015	10:46:44	0.004	0.004
24-Aug-2015	10:50:44	0.003	0.003
24-Aug-2015	10:54:44	0.003	0.003
24-Aug-2015	10:58:44	0.003	0.003
24-Aug-2015	11:02:44	0.004	0.004
24-Aug-2015	11:06:44	0.006	0.004
24-Aug-2015	11:10:44	0.003	0.007
24-Aug-2015	11:14:44	0.013	0.006
24-Aug-2015	11:18:44	0.003	0.007
24-Aug-2015	11:22:44	0.004	0.004
24-Aug-2015	11:26:44	0.005	0.004
24-Aug-2015	11:30:44	0.004	0.004
24-Aug-2015	11:34:44	0.004	0.003

DUST MONITORING

August 2015

shading indicates values over the threshold

Monitor: 3

Threshold: 0.15 (mg/m^3)

Date	Time	Value (mg/m^3)	TWA (mg/m^3)
24-Aug-2015	11:38:44	0.002	0.003
24-Aug-2015	11:42:44	0.003	0.003
24-Aug-2015	11:46:44	0.003	0.002
24-Aug-2015	11:50:44	0.001	0.002
24-Aug-2015	11:54:44	0.002	0.001
24-Aug-2015	11:58:44	0.001	0.002
24-Aug-2015	12:02:44	0.002	0.002
24-Aug-2015	12:06:44	0.002	0.003
24-Aug-2015	12:10:44	0.004	0.003
24-Aug-2015	12:14:44	0.002	0.003
24-Aug-2015	12:18:44	0.002	0.002
24-Aug-2015	12:22:44	0.001	0.001
24-Aug-2015	12:26:44	0.001	0.001
24-Aug-2015	12:30:44	0.001	0.002
24-Aug-2015	12:34:44	0.005	0.002
24-Aug-2015	12:38:44	0.001	0.003
24-Aug-2015	12:42:44	0.004	0.002
24-Aug-2015	12:46:44	0.001	0.002
24-Aug-2015	12:50:44	0.001	0.001
24-Aug-2015	12:54:44	0.001	0.001
24-Aug-2015	12:58:44	0.000	0.001
24-Aug-2015	13:02:44	0.001	0.001
24-Aug-2015	13:06:44	0.001	0.001
24-Aug-2015	13:10:44	0.001	0.001
24-Aug-2015	13:14:44	0.000	0.001
24-Aug-2015	13:18:44	0.001	0.001
25-Aug-2015	08:30:43	0.000	0.001
25-Aug-2015	08:34:43	0.001	0.000
25-Aug-2015	08:38:43	0.000	0.000
25-Aug-2015	08:42:43	0.000	0.000
25-Aug-2015	08:46:43	0.000	0.000
25-Aug-2015	08:50:43	0.000	0.000
25-Aug-2015	08:54:43	0.000	0.000
25-Aug-2015	08:58:43	0.000	0.000
25-Aug-2015	09:02:43	0.000	0.000
25-Aug-2015	09:06:43	0.000	0.000
25-Aug-2015	09:10:43	0.000	0.000
25-Aug-2015	09:14:43	0.000	0.000
25-Aug-2015	09:18:43	0.000	0.000
25-Aug-2015	09:22:43	0.000	0.001
25-Aug-2015	09:26:43	0.002	0.001

DUST MONITORING

August 2015

shading indicates values over the threshold

Monitor: 3

Threshold: 0.15 (mg/m^3)

Date	Time	Value (mg/m^3)	TWA (mg/m^3)
25-Aug-2015	09:30:43	0.000	0.001
25-Aug-2015	09:34:43	0.000	0.000
25-Aug-2015	09:38:43	0.000	0.001
25-Aug-2015	09:42:43	0.002	0.001
25-Aug-2015	09:46:43	0.000	0.001
25-Aug-2015	09:50:43	0.000	0.000
25-Aug-2015	09:54:43	0.000	0.000
25-Aug-2015	09:58:43	0.000	0.000
25-Aug-2015	10:02:43	0.000	0.002
25-Aug-2015	10:06:43	0.006	0.002
25-Aug-2015	10:10:43	0.000	0.002
25-Aug-2015	10:14:43	0.000	0.000
25-Aug-2015	10:18:43	0.000	0.000
25-Aug-2015	10:22:43	0.000	0.000
25-Aug-2015	10:26:43	0.000	0.001
25-Aug-2015	10:30:43	0.002	0.001
25-Aug-2015	10:34:43	0.001	0.001
25-Aug-2015	10:38:43	0.000	0.000
25-Aug-2015	10:42:43	0.000	0.000
25-Aug-2015	10:46:43	0.000	0.000
25-Aug-2015	10:50:43	0.000	0.000
25-Aug-2015	10:54:43	0.000	0.000
25-Aug-2015	10:58:43	0.000	0.000
25-Aug-2015	11:02:43	0.000	0.000
25-Aug-2015	11:06:43	0.000	0.000
25-Aug-2015	11:10:43	0.000	0.000
25-Aug-2015	11:14:43	0.000	0.000
25-Aug-2015	11:18:43	0.000	0.000
25-Aug-2015	11:22:43	0.000	0.000
25-Aug-2015	11:26:43	0.000	0.000
25-Aug-2015	11:30:43	0.000	0.000
25-Aug-2015	11:34:43	0.000	0.000
25-Aug-2015	11:38:43	0.000	0.000
25-Aug-2015	11:42:43	0.000	0.000
25-Aug-2015	11:46:43	0.000	0.000
25-Aug-2015	11:50:43	0.000	0.000
25-Aug-2015	11:54:43	0.000	0.000
25-Aug-2015	11:58:43	0.000	0.000
25-Aug-2015	12:02:43	0.000	0.000
25-Aug-2015	12:06:43	0.000	0.000
25-Aug-2015	12:10:43	0.000	0.001

DUST MONITORING

August 2015

shading indicates values over the threshold

Monitor: 3

Threshold: 0.15 (mg/m^3)

Date	Time	Value (mg/m^3)	TWA (mg/m^3)
25-Aug-2015	12:14:43	0.002	0.002
25-Aug-2015	12:18:43	0.003	0.005
25-Aug-2015	12:22:43	0.009	0.007
25-Aug-2015	12:26:43	0.009	0.007
25-Aug-2015	12:30:43	0.002	0.004
25-Aug-2015	12:34:43	0.001	0.002
25-Aug-2015	12:38:43	0.003	0.005
25-Aug-2015	12:42:43	0.012	0.005
25-Aug-2015	12:46:43	0.000	0.007
25-Aug-2015	12:50:43	0.008	0.005
25-Aug-2015	12:54:43	0.007	0.005
25-Aug-2015	12:58:43	0.001	0.003
25-Aug-2015	13:02:43	0.002	0.006
25-Aug-2015	13:06:43	0.016	0.010
25-Aug-2015	13:10:43	0.011	0.015
25-Aug-2015	13:14:43	0.019	0.010
25-Aug-2015	13:18:43	0.000	0.006
25-Aug-2015	13:22:43	0.000	0.000
25-Aug-2015	13:26:43	0.000	0.002
25-Aug-2015	13:30:43	0.005	0.003
25-Aug-2015	13:34:43	0.003	0.010
25-Aug-2015	13:38:43	0.023	0.009
25-Aug-2015	13:42:43	0.000	0.022
25-Aug-2015	13:46:43	0.044	0.040
25-Aug-2015	13:50:43	0.075	0.040
25-Aug-2015	13:54:43	0.000	0.025
25-Aug-2015	13:58:43	0.000	0.018
25-Aug-2015	14:02:43	0.054	0.019
25-Aug-2015	14:06:43	0.002	0.040
25-Aug-2015	14:10:43	0.063	0.025
25-Aug-2015	14:14:43	0.011	0.025
25-Aug-2015	14:18:43	0.001	0.004
25-Aug-2015	14:22:43	0.000	0.002
25-Aug-2015	14:26:43	0.004	0.002
25-Aug-2015	14:30:43	0.003	0.004
25-Aug-2015	14:34:43	0.006	0.003
25-Aug-2015	14:38:43	0.000	0.002
25-Aug-2015	14:42:43	0.000	0.000
25-Aug-2015	14:46:43	0.000	0.002
25-Aug-2015	14:50:43	0.005	0.002
25-Aug-2015	14:54:43	0.000	0.002

DUST MONITORING

August 2015

shading indicates values over the threshold

Monitor: 3

Threshold: 0.15 (mg/m^3)

Date	Time	Value (mg/m^3)	TWA (mg/m^3)
25-Aug-2015	14:58:43	0.000	0.000
25-Aug-2015	15:02:43	0.000	0.000
25-Aug-2015	15:06:43	0.000	0.000
25-Aug-2015	15:10:43	0.001	0.000
25-Aug-2015	15:14:43	0.000	0.000
25-Aug-2015	15:18:43	0.000	0.000
25-Aug-2015	15:22:43	0.000	0.000
25-Aug-2015	15:26:43	0.000	0.000
25-Aug-2015	15:30:43	0.000	0.000
25-Aug-2015	15:34:43	0.000	0.000
25-Aug-2015	15:38:43	0.000	0.000
25-Aug-2015	15:42:43	0.000	0.000
25-Aug-2015	15:46:43	0.000	0.000
25-Aug-2015	15:50:43	0.000	0.020
25-Aug-2015	15:54:43	0.061	0.020
25-Aug-2015	15:58:43	0.000	0.020
25-Aug-2015	16:02:43	0.000	0.001
25-Aug-2015	16:06:43	0.002	0.001
25-Aug-2015	16:10:43	0.000	0.001
25-Aug-2015	16:14:43	0.000	0.000
25-Aug-2015	16:18:43	0.000	0.013
25-Aug-2015	16:22:43	0.040	0.018
25-Aug-2015	16:26:43	0.013	0.018
25-Aug-2015	16:30:43	0.002	0.006
25-Aug-2015	16:34:43	0.004	0.003
25-Aug-2015	16:38:43	0.002	0.003
25-Aug-2015	16:42:43	0.002	0.075
25-Aug-2015	16:46:43	0.220	0.090
25-Aug-2015	16:50:43	0.047	0.089
25-Aug-2015	16:54:43	0.001	0.016
25-Aug-2015	16:58:43	0.000	0.000
25-Aug-2015	17:02:43	0.000	0.000
25-Aug-2015	17:06:43	0.000	0.000
25-Aug-2015	17:10:43	0.000	0.000
25-Aug-2015	17:14:43	0.000	0.000
25-Aug-2015	17:18:43	0.000	0.000
25-Aug-2015	17:22:43	0.000	0.000
25-Aug-2015	17:26:43	0.000	0.000
25-Aug-2015	17:30:43	0.000	0.000
25-Aug-2015	17:34:43	0.000	0.000
25-Aug-2015	17:38:43	0.000	0.000

DUST MONITORING

August 2015

shading indicates values over the threshold

Monitor: 3

Threshold: 0.15 (mg/m^3)

Date	Time	Value (mg/m^3)	TWA (mg/m^3)
25-Aug-2015	17:42:43	0.000	0.000
25-Aug-2015	17:46:43	0.000	0.000
25-Aug-2015	17:50:43	0.000	0.000
25-Aug-2015	17:54:43	0.000	0.000
25-Aug-2015	17:58:43	0.000	0.000
25-Aug-2015	18:02:43	0.000	0.000
25-Aug-2015	18:06:43	0.000	0.000
25-Aug-2015	18:10:43	0.000	0.000
25-Aug-2015	18:14:43	0.000	0.000
25-Aug-2015	18:18:43	0.000	0.000
25-Aug-2015	18:22:43	0.000	0.000
25-Aug-2015	18:26:43	0.000	0.000
25-Aug-2015	18:30:43	0.000	0.000
25-Aug-2015	18:34:43	0.000	0.000
25-Aug-2015	18:38:43	0.000	0.000
25-Aug-2015	18:42:43	0.000	0.000
25-Aug-2015	18:46:43	0.000	0.000
25-Aug-2015	18:50:43	0.000	0.000
25-Aug-2015	18:54:43	0.000	0.000
25-Aug-2015	18:58:43	0.000	0.000
25-Aug-2015	19:02:43	0.000	0.000
25-Aug-2015	19:06:43	0.000	0.000
25-Aug-2015	19:10:43	0.000	0.000
25-Aug-2015	19:14:43	0.000	0.000
25-Aug-2015	19:18:43	0.000	0.000
25-Aug-2015	19:22:43	0.000	0.000
25-Aug-2015	19:26:43	0.000	0.000
25-Aug-2015	19:30:43	0.000	0.000
25-Aug-2015	19:34:43	0.000	0.000
25-Aug-2015	19:38:43	0.000	0.000
25-Aug-2015	19:42:43	0.000	0.000
25-Aug-2015	19:46:43	0.000	0.000
25-Aug-2015	19:50:43	0.000	0.000
25-Aug-2015	19:54:43	0.000	0.000
25-Aug-2015	19:58:43	0.000	0.000
25-Aug-2015	20:02:43	0.000	0.000
25-Aug-2015	20:06:43	0.000	0.000
25-Aug-2015	20:10:43	0.000	0.000
25-Aug-2015	20:14:43	0.000	0.000
25-Aug-2015	20:18:43	0.000	0.000
25-Aug-2015	20:22:43	0.000	0.000

DUST MONITORING

August 2015

shading indicates values over the threshold

Monitor: 3

Threshold: 0.15 (mg/m^3)

Date	Time	Value (mg/m^3)	TWA (mg/m^3)
25-Aug-2015	20:26:43	0.000	0.000
25-Aug-2015	20:30:43	0.000	0.000
25-Aug-2015	20:34:43	0.000	0.000
25-Aug-2015	20:38:43	0.000	0.000
25-Aug-2015	20:42:43	0.000	0.000
25-Aug-2015	20:46:43	0.000	0.000
25-Aug-2015	20:50:43	0.000	0.000
25-Aug-2015	20:54:43	0.000	0.000
25-Aug-2015	20:58:43	0.000	0.000
25-Aug-2015	21:02:43	0.000	0.000
25-Aug-2015	21:06:43	0.000	0.000
26-Aug-2015	10:02:36	0.000	0.000
26-Aug-2015	10:06:36	0.000	0.000
26-Aug-2015	10:10:36	0.000	0.000
26-Aug-2015	10:14:36	0.000	0.000
26-Aug-2015	10:18:36	0.000	0.000
26-Aug-2015	10:22:36	0.000	0.000
26-Aug-2015	10:26:36	0.000	0.000
26-Aug-2015	10:30:36	0.000	0.000
26-Aug-2015	10:34:36	0.000	0.000
26-Aug-2015	10:38:36	0.000	0.000
26-Aug-2015	10:42:36	0.000	0.000
26-Aug-2015	10:46:36	0.000	0.000
26-Aug-2015	10:50:36	0.000	0.000
26-Aug-2015	10:54:36	0.000	0.000
26-Aug-2015	10:58:36	0.000	0.000
26-Aug-2015	11:02:36	0.000	0.000
26-Aug-2015	11:06:36	0.000	0.000
26-Aug-2015	11:10:36	0.000	0.000
26-Aug-2015	11:14:36	0.000	0.000
26-Aug-2015	11:18:36	0.000	0.000
26-Aug-2015	11:22:36	0.000	0.000
26-Aug-2015	11:26:36	0.000	0.000
26-Aug-2015	11:30:36	0.000	0.000
26-Aug-2015	11:34:36	0.000	0.000
26-Aug-2015	11:38:36	0.000	0.000
26-Aug-2015	11:42:36	0.000	0.000
26-Aug-2015	11:46:36	0.000	0.000
26-Aug-2015	11:50:36	0.000	0.000
26-Aug-2015	11:54:36	0.000	0.000
26-Aug-2015	11:58:36	0.000	0.000

DUST MONITORING

August 2015

shading indicates values over the threshold

Monitor: 3

Threshold: 0.15 (mg/m^3)

Date	Time	Value (mg/m^3)	TWA (mg/m^3)
26-Aug-2015	12:02:36	0.000	0.000
26-Aug-2015	12:06:36	0.000	0.000
26-Aug-2015	12:10:36	0.000	0.000
26-Aug-2015	12:14:36	0.000	0.000
26-Aug-2015	12:18:36	0.000	0.000
26-Aug-2015	12:22:36	0.000	0.000
26-Aug-2015	12:26:36	0.000	0.000
26-Aug-2015	12:30:36	0.000	0.000
26-Aug-2015	12:34:36	0.000	0.000
26-Aug-2015	12:38:36	0.000	0.000
26-Aug-2015	12:42:36	0.000	0.000
26-Aug-2015	12:46:36	0.000	0.000
26-Aug-2015	12:50:36	0.000	0.000
26-Aug-2015	12:54:36	0.000	0.000
26-Aug-2015	12:58:36	0.000	0.000
26-Aug-2015	13:02:36	0.000	0.000
26-Aug-2015	13:06:36	0.000	0.000
26-Aug-2015	13:10:36	0.000	0.000
26-Aug-2015	13:14:36	0.000	0.000
26-Aug-2015	13:18:36	0.000	0.000
26-Aug-2015	13:22:36	0.000	0.000
26-Aug-2015	13:26:36	0.000	0.000
26-Aug-2015	13:30:36	0.000	0.000
26-Aug-2015	13:34:36	0.000	0.006
26-Aug-2015	13:38:36	0.019	0.006
26-Aug-2015	13:42:36	0.000	0.006
26-Aug-2015	13:46:36	0.000	0.000
26-Aug-2015	13:50:36	0.000	0.000
26-Aug-2015	13:54:36	0.000	0.000
26-Aug-2015	13:58:36	0.000	0.000
26-Aug-2015	14:02:36	0.000	0.000
26-Aug-2015	14:06:36	0.000	0.000
26-Aug-2015	14:10:36	0.000	0.000
26-Aug-2015	14:14:36	0.000	0.000
26-Aug-2015	14:18:36	0.000	0.000
26-Aug-2015	14:22:36	0.000	0.000
26-Aug-2015	14:26:36	0.000	0.000
26-Aug-2015	14:30:36	0.000	0.000
26-Aug-2015	14:34:36	0.000	0.000
26-Aug-2015	14:38:36	0.000	0.000
26-Aug-2015	14:42:36	0.000	0.000

DUST MONITORING

August 2015

shading indicates values over the threshold

Monitor: 3

Threshold: 0.15 (mg/m^3)

Date	Time	Value (mg/m^3)	TWA (mg/m^3)
26-Aug-2015	14:46:36	0.000	0.000
26-Aug-2015	14:50:36	0.000	0.000
26-Aug-2015	14:54:36	0.000	0.000
26-Aug-2015	14:58:36	0.000	0.000
26-Aug-2015	15:02:36	0.000	0.000
26-Aug-2015	15:06:36	0.000	0.000
26-Aug-2015	15:10:36	0.000	0.000
26-Aug-2015	15:14:36	0.000	0.000
26-Aug-2015	15:18:36	0.000	0.000
26-Aug-2015	15:22:36	0.000	0.000
27-Aug-2015	09:15:54	0.002	0.002
27-Aug-2015	09:19:54	0.001	0.001
27-Aug-2015	09:23:54	0.001	0.001
27-Aug-2015	09:27:54	0.001	0.001
27-Aug-2015	09:31:54	0.000	0.002
27-Aug-2015	09:35:54	0.005	0.002
27-Aug-2015	09:39:54	0.000	0.002
27-Aug-2015	09:43:54	0.000	0.000
27-Aug-2015	09:47:54	0.000	0.012
27-Aug-2015	09:51:54	0.037	0.018
27-Aug-2015	09:55:54	0.016	0.019
27-Aug-2015	09:59:54	0.005	0.015
27-Aug-2015	10:03:54	0.024	0.012
27-Aug-2015	10:07:54	0.007	0.014
27-Aug-2015	10:11:54	0.011	0.009
27-Aug-2015	10:15:54	0.008	0.008
27-Aug-2015	10:19:54	0.005	0.005
27-Aug-2015	10:23:54	0.003	0.003
27-Aug-2015	10:27:54	0.001	0.003
27-Aug-2015	10:31:54	0.004	0.004
27-Aug-2015	10:35:54	0.006	0.008
27-Aug-2015	10:39:54	0.013	0.006
27-Aug-2015	10:43:54	0.000	0.008
27-Aug-2015	10:47:54	0.010	0.005
27-Aug-2015	10:51:54	0.006	0.008
27-Aug-2015	10:55:54	0.007	0.010
27-Aug-2015	10:59:54	0.018	0.011
27-Aug-2015	11:03:54	0.009	0.010
27-Aug-2015	11:07:54	0.002	0.017
27-Aug-2015	11:11:54	0.041	0.017
27-Aug-2015	11:15:54	0.007	0.016

DUST MONITORING

August 2015

shading indicates values over the threshold

Monitor: 3

Threshold: 0.15 (mg/m^3)

Date	Time	Value (mg/m^3)	TWA (mg/m^3)
27-Aug-2015	11:19:54	0.000	0.002
27-Aug-2015	11:23:54	0.000	0.001
27-Aug-2015	11:27:54	0.003	0.001
27-Aug-2015	11:31:54	0.001	0.002
27-Aug-2015	11:35:54	0.001	0.001
27-Aug-2015	11:39:54	0.000	0.001
27-Aug-2015	11:43:54	0.001	0.001
27-Aug-2015	11:47:54	0.001	0.001
27-Aug-2015	11:51:54	0.001	0.002
27-Aug-2015	11:55:54	0.005	0.003
27-Aug-2015	11:59:54	0.003	0.003
27-Aug-2015	12:03:54	0.001	0.002
27-Aug-2015	12:07:54	0.002	0.005
27-Aug-2015	12:11:54	0.011	0.009
27-Aug-2015	12:15:54	0.013	0.009
27-Aug-2015	12:19:54	0.002	0.006
27-Aug-2015	12:23:54	0.003	0.002
27-Aug-2015	12:27:54	0.000	0.004
27-Aug-2015	12:31:54	0.008	0.004
27-Aug-2015	12:35:54	0.003	0.004
27-Aug-2015	12:39:54	0.001	0.001
27-Aug-2015	12:43:54	0.000	0.000
27-Aug-2015	12:47:54	0.000	0.002
27-Aug-2015	12:51:54	0.006	0.003
27-Aug-2015	12:55:54	0.004	0.004
27-Aug-2015	12:59:54	0.002	0.003
27-Aug-2015	13:03:54	0.004	0.002
27-Aug-2015	13:07:54	0.000	0.008
27-Aug-2015	13:11:54	0.020	0.012
27-Aug-2015	13:15:54	0.015	0.012
27-Aug-2015	13:19:54	0.001	0.006
27-Aug-2015	13:23:54	0.002	0.002
27-Aug-2015	13:27:54	0.002	0.002
27-Aug-2015	13:31:54	0.001	0.002
27-Aug-2015	13:35:54	0.002	0.005
27-Aug-2015	13:39:54	0.013	0.012
27-Aug-2015	13:43:54	0.022	0.015
27-Aug-2015	13:47:54	0.009	0.014
27-Aug-2015	13:51:54	0.010	0.016
27-Aug-2015	13:55:54	0.029	0.013
27-Aug-2015	13:59:54	0.001	0.011

DUST MONITORING

August 2015

shading indicates values over the threshold

Monitor: 3

Threshold: 0.15 (mg/m^3)

Date	Time	Value (mg/m^3)	TWA (mg/m^3)
27-Aug-2015	14:03:54	0.002	0.004
27-Aug-2015	14:07:54	0.009	0.009
27-Aug-2015	14:11:54	0.016	0.013
27-Aug-2015	14:15:54	0.013	0.010
27-Aug-2015	14:19:54	0.001	0.007
27-Aug-2015	14:23:54	0.007	0.007
27-Aug-2015	14:27:54	0.014	0.007
27-Aug-2015	14:31:54	0.000	0.006
27-Aug-2015	14:35:54	0.005	0.036
27-Aug-2015	14:39:54	0.103	0.037
27-Aug-2015	14:43:54	0.004	0.036
27-Aug-2015	14:47:54	0.001	0.003
27-Aug-2015	14:51:54	0.003	0.001
27-Aug-2015	14:55:54	0.000	0.001
27-Aug-2015	14:59:54	0.001	0.001
27-Aug-2015	15:03:54	0.001	0.004
27-Aug-2015	15:07:54	0.009	0.005
27-Aug-2015	15:11:54	0.005	0.005
27-Aug-2015	15:15:54	0.001	0.006
27-Aug-2015	15:19:54	0.012	0.012
27-Aug-2015	15:23:54	0.022	0.017
27-Aug-2015	15:27:54	0.016	0.014
27-Aug-2015	15:31:54	0.005	0.007
27-Aug-2015	15:35:54	0.001	0.002
27-Aug-2015	15:39:54	0.001	0.001
27-Aug-2015	15:43:54	0.000	0.003
27-Aug-2015	15:47:54	0.008	0.003
27-Aug-2015	15:51:54	0.002	0.011
27-Aug-2015	15:55:54	0.024	0.010
27-Aug-2015	15:59:54	0.005	0.012
27-Aug-2015	16:03:54	0.006	0.009
27-Aug-2015	16:07:54	0.017	0.015
27-Aug-2015	16:11:54	0.022	0.014
27-Aug-2015	16:15:54	0.003	0.011
27-Aug-2015	16:19:54	0.007	0.017
27-Aug-2015	16:23:54	0.041	0.017
27-Aug-2015	16:27:54	0.004	0.016
27-Aug-2015	16:31:54	0.003	0.004
28-Aug-2015	07:09:44	0.019	0.017
28-Aug-2015	07:13:44	0.015	0.017
28-Aug-2015	07:17:44	0.016	0.017

DUST MONITORING

August 2015

shading indicates values over the threshold

Monitor: 3

Threshold: 0.15 (mg/m^3)

Date	Time	Value (mg/m^3)	TWA (mg/m^3)
28-Aug-2015	07:21:44	0.021	0.018
28-Aug-2015	07:25:44	0.018	0.019
28-Aug-2015	07:29:44	0.017	0.018
28-Aug-2015	07:33:44	0.019	0.018
28-Aug-2015	07:37:44	0.019	0.018
28-Aug-2015	07:41:44	0.017	0.017
28-Aug-2015	07:45:44	0.015	0.016
28-Aug-2015	07:49:44	0.015	0.014
28-Aug-2015	07:53:44	0.012	0.013
28-Aug-2015	07:57:44	0.011	0.011
28-Aug-2015	08:01:44	0.009	0.009
28-Aug-2015	08:05:44	0.008	0.009
28-Aug-2015	08:09:44	0.011	0.009
28-Aug-2015	08:13:44	0.009	0.010
28-Aug-2015	08:17:44	0.009	0.009
28-Aug-2015	08:21:44	0.010	0.010
28-Aug-2015	08:25:44	0.010	0.010
28-Aug-2015	08:29:44	0.010	0.010
28-Aug-2015	08:33:44	0.011	0.010
28-Aug-2015	08:37:44	0.010	0.010
28-Aug-2015	08:41:44	0.009	0.009
28-Aug-2015	08:45:44	0.009	0.009
28-Aug-2015	08:49:44	0.008	0.018
28-Aug-2015	08:53:44	0.038	0.027
28-Aug-2015	08:57:44	0.034	0.031
28-Aug-2015	09:01:44	0.020	0.022
28-Aug-2015	09:05:44	0.011	0.014
28-Aug-2015	09:09:44	0.012	0.011
28-Aug-2015	09:13:44	0.011	0.053
28-Aug-2015	09:17:44	0.137	0.057
28-Aug-2015	09:21:44	0.022	0.081
28-Aug-2015	09:25:44	0.084	0.050
28-Aug-2015	09:29:44	0.044	0.151
28-Aug-2015	09:33:44	0.324	0.206
28-Aug-2015	09:37:44	0.250	0.205
28-Aug-2015	09:41:44	0.040	0.112
28-Aug-2015	09:45:44	0.046	0.043
28-Aug-2015	09:49:44	0.043	0.053
28-Aug-2015	09:53:44	0.069	0.051
28-Aug-2015	09:57:44	0.042	0.067
28-Aug-2015	10:01:44	0.090	0.053

DUST MONITORING

August 2015

shading indicates values over the threshold

Monitor: 3

Threshold: 0.15 (mg/m^3)

Date	Time	Value (mg/m^3)	TWA (mg/m^3)
28-Aug-2015	10:05:44	0.028	0.045
28-Aug-2015	10:09:44	0.018	0.039
28-Aug-2015	10:13:44	0.072	0.042
28-Aug-2015	10:17:44	0.035	0.065
28-Aug-2015	10:21:44	0.088	0.065
28-Aug-2015	10:25:44	0.071	0.059
28-Aug-2015	10:29:44	0.017	0.034
28-Aug-2015	10:33:44	0.013	0.014
28-Aug-2015	10:37:44	0.012	0.012
28-Aug-2015	10:41:44	0.012	0.019
28-Aug-2015	10:45:44	0.034	0.028
28-Aug-2015	10:49:44	0.039	0.044
28-Aug-2015	10:53:44	0.059	0.037
28-Aug-2015	10:57:44	0.013	0.028
28-Aug-2015	11:01:44	0.012	0.013
31-Aug-2015	08:43:26	0.001	0.001
31-Aug-2015	08:47:26	0.000	0.000
31-Aug-2015	08:51:26	0.000	0.000
31-Aug-2015	08:55:26	0.000	0.000
31-Aug-2015	08:59:26	0.001	0.000
31-Aug-2015	09:03:26	0.000	0.000
31-Aug-2015	09:07:26	0.000	0.000
31-Aug-2015	09:11:26	0.001	0.000
31-Aug-2015	09:15:26	0.000	0.000
31-Aug-2015	09:19:26	0.000	0.000
31-Aug-2015	09:23:26	0.000	0.000
31-Aug-2015	09:27:26	0.000	0.000
31-Aug-2015	09:31:26	0.000	0.000
31-Aug-2015	09:35:26	0.000	0.000
31-Aug-2015	09:39:26	0.000	0.001
31-Aug-2015	09:43:26	0.002	0.001
31-Aug-2015	09:47:26	0.000	0.001
31-Aug-2015	09:51:26	0.000	0.000
31-Aug-2015	09:55:26	0.000	0.000
31-Aug-2015	09:59:26	0.000	0.000
31-Aug-2015	10:03:26	0.000	0.000
31-Aug-2015	10:07:26	0.000	0.000
31-Aug-2015	10:11:26	0.001	0.000
31-Aug-2015	10:15:26	0.000	0.000
31-Aug-2015	10:19:26	0.000	0.000
31-Aug-2015	10:23:26	0.001	0.000

DUST MONITORING

August 2015

shading indicates values over the threshold

Monitor: 3

Threshold: 0.15 (mg/m^3)

Date	Time	Value (mg/m^3)	TWA (mg/m^3)
31-Aug-2015	10:27:26	0.000	0.000
31-Aug-2015	10:31:26	0.000	0.000
31-Aug-2015	10:35:26	0.000	0.001
31-Aug-2015	10:39:26	0.002	0.001
31-Aug-2015	10:43:26	0.000	0.001
31-Aug-2015	10:47:26	0.000	0.000
31-Aug-2015	10:51:26	0.000	0.000
31-Aug-2015	10:55:26	0.000	0.000
31-Aug-2015	10:59:26	0.000	0.000
31-Aug-2015	11:03:26	0.000	0.000
31-Aug-2015	11:07:26	0.000	0.000
31-Aug-2015	11:11:26	0.000	0.000
31-Aug-2015	11:15:26	0.000	0.000
31-Aug-2015	11:19:26	0.000	0.000
31-Aug-2015	11:23:26	0.000	0.000
31-Aug-2015	11:27:26	0.000	0.000
31-Aug-2015	11:31:26	0.000	0.000
31-Aug-2015	11:35:26	0.000	0.000
31-Aug-2015	11:39:26	0.000	0.000
31-Aug-2015	11:43:26	0.000	0.000
31-Aug-2015	11:47:26	0.000	0.000
31-Aug-2015	11:51:26	0.000	0.000
31-Aug-2015	11:55:26	0.000	0.000
31-Aug-2015	11:59:26	0.000	0.000
31-Aug-2015	12:03:26	0.000	0.000
31-Aug-2015	12:07:26	0.000	0.000
31-Aug-2015	12:11:26	0.000	0.000
31-Aug-2015	12:15:26	0.000	0.000
31-Aug-2015	12:19:26	0.001	0.000
31-Aug-2015	12:23:26	0.000	0.000
31-Aug-2015	12:27:26	0.000	0.000
31-Aug-2015	12:31:26	0.000	0.000
31-Aug-2015	12:35:26	0.000	0.000
31-Aug-2015	12:39:26	0.000	0.000
31-Aug-2015	12:43:26	0.000	0.000
31-Aug-2015	12:47:26	0.000	0.000
31-Aug-2015	12:51:26	0.000	0.000
31-Aug-2015	12:55:26	0.000	0.000
31-Aug-2015	12:59:26	0.000	0.000
31-Aug-2015	13:03:26	0.000	0.000
31-Aug-2015	13:07:26	0.000	0.000

DUST MONITORING

August 2015

shading indicates values over the threshold

Monitor: 3

Threshold: 0.15 (mg/m^3)

Date	Time	Value (mg/m^3)	TWA (mg/m^3)
31-Aug-2015	13:11:26	0.000	0.000
31-Aug-2015	13:15:26	0.000	0.000
31-Aug-2015	13:19:26	0.000	0.000
31-Aug-2015	13:23:26	0.000	0.000
31-Aug-2015	13:27:26	0.000	0.000
31-Aug-2015	13:31:26	0.000	0.000
31-Aug-2015	13:35:26	0.000	0.000
31-Aug-2015	13:39:26	0.000	0.000
31-Aug-2015	13:43:26	0.000	0.000
31-Aug-2015	13:47:26	0.000	0.000
31-Aug-2015	13:51:26	0.000	0.000
31-Aug-2015	13:55:26	0.000	0.000
31-Aug-2015	13:59:26	0.000	0.000
31-Aug-2015	14:03:26	0.000	0.000
31-Aug-2015	14:07:26	0.000	0.000
31-Aug-2015	14:11:26	0.000	0.000
31-Aug-2015	14:15:26	0.000	0.000
31-Aug-2015	14:19:26	0.000	0.000
31-Aug-2015	14:23:26	0.000	0.000
31-Aug-2015	14:27:26	0.000	0.000
31-Aug-2015	14:31:26	0.000	0.000
31-Aug-2015	14:35:26	0.000	0.000
31-Aug-2015	14:39:26	0.000	0.000
31-Aug-2015	14:43:26	0.000	0.000
31-Aug-2015	14:47:26	0.000	0.000
31-Aug-2015	14:51:26	0.000	0.000
31-Aug-2015	14:55:26	0.000	0.000
31-Aug-2015	14:59:26	0.000	0.000
31-Aug-2015	15:03:26	0.000	0.000
31-Aug-2015	15:07:26	0.000	0.000
31-Aug-2015	15:11:26	0.000	0.000
31-Aug-2015	15:15:26	0.000	0.000
31-Aug-2015	15:19:26	0.000	0.000
31-Aug-2015	15:23:26	0.000	0.000
31-Aug-2015	15:27:26	0.000	0.000
31-Aug-2015	15:31:26	0.000	0.000
31-Aug-2015	15:35:26	0.000	0.000
31-Aug-2015	15:39:26	0.000	0.000

DUST MONITORING

September 2015

shading indicates values over the threshold

Monitor: 1

Threshold: 0.15 (mg/m^3)

Date	Time	Value (mg/m^3)	TWA (mg/m^3)
1-Sep-2015	07:02:49	0.007	0.005
1-Sep-2015	07:06:49	0.003	0.004
1-Sep-2015	07:10:49	0.001	0.002
1-Sep-2015	07:14:49	0.001	0.002
1-Sep-2015	07:18:49	0.003	0.002
1-Sep-2015	07:22:49	0.003	0.002
1-Sep-2015	07:26:49	0.001	0.002
1-Sep-2015	07:30:49	0.001	0.001
1-Sep-2015	07:34:49	0.001	0.001
1-Sep-2015	07:38:49	0.001	0.001
1-Sep-2015	07:42:49	0.001	0.001
1-Sep-2015	07:46:49	0.001	0.001
1-Sep-2015	07:50:49	0.001	0.002
1-Sep-2015	07:54:49	0.003	0.002
1-Sep-2015	07:58:49	0.002	0.002
1-Sep-2015	08:02:49	0.000	0.002
1-Sep-2015	08:06:49	0.004	0.002
1-Sep-2015	08:10:49	0.002	0.002
1-Sep-2015	08:14:49	0.000	0.001
1-Sep-2015	08:18:49	0.001	0.000
1-Sep-2015	08:22:49	0.000	0.000
1-Sep-2015	08:26:49	0.000	0.000
1-Sep-2015	08:30:49	0.000	0.000
1-Sep-2015	08:34:49	0.000	0.000
1-Sep-2015	08:38:49	0.000	0.000
1-Sep-2015	08:42:49	0.000	0.000
1-Sep-2015	08:46:49	0.001	0.000
1-Sep-2015	08:50:49	0.000	0.000
1-Sep-2015	08:54:49	0.000	0.000
1-Sep-2015	08:58:49	0.000	0.000
1-Sep-2015	09:02:49	0.000	0.000
1-Sep-2015	09:06:49	0.000	0.000
1-Sep-2015	09:10:49	0.000	0.000
1-Sep-2015	09:14:49	0.000	0.000
1-Sep-2015	09:18:49	0.000	0.000
1-Sep-2015	09:22:49	0.000	0.000
1-Sep-2015	09:26:49	0.000	0.000
1-Sep-2015	09:30:49	0.000	0.000
1-Sep-2015	09:34:49	0.000	0.000
1-Sep-2015	09:38:49	0.000	0.000
1-Sep-2015	09:42:49	0.000	0.000

DUST MONITORING

September 2015

shading indicates values over the threshold

Monitor: 1

Threshold: 0.15 (mg/m^3)

Date	Time	Value (mg/m^3)	TWA (mg/m^3)
1-Sep-2015	09:46:49	0.000	0.000
1-Sep-2015	09:50:49	0.000	0.000
1-Sep-2015	09:54:49	0.000	0.000
1-Sep-2015	09:58:49	0.000	0.000
1-Sep-2015	10:02:49	0.000	0.000
1-Sep-2015	10:06:49	0.000	0.000
1-Sep-2015	10:10:49	0.000	0.000
1-Sep-2015	10:14:49	0.000	0.000
1-Sep-2015	10:18:49	0.000	0.000
1-Sep-2015	10:22:49	0.000	0.000
1-Sep-2015	10:26:49	0.000	0.000
1-Sep-2015	10:30:49	0.000	0.000
1-Sep-2015	10:34:49	0.000	0.000
1-Sep-2015	10:38:49	0.000	0.000
1-Sep-2015	10:42:49	0.000	0.000
1-Sep-2015	10:46:49	0.000	0.000
1-Sep-2015	10:50:49	0.001	0.000
1-Sep-2015	10:54:49	0.000	0.000
1-Sep-2015	10:58:49	0.000	0.000
1-Sep-2015	11:02:49	0.000	0.000
1-Sep-2015	11:06:49	0.000	0.000
1-Sep-2015	11:10:49	0.000	0.000
1-Sep-2015	11:14:49	0.000	0.000
1-Sep-2015	11:18:49	0.000	0.000
1-Sep-2015	11:22:49	0.000	0.000
1-Sep-2015	11:26:49	0.000	0.000
1-Sep-2015	11:30:49	0.000	0.000
1-Sep-2015	11:34:49	0.000	0.000
1-Sep-2015	11:38:49	0.000	0.000
1-Sep-2015	11:42:49	0.000	0.000
1-Sep-2015	11:46:49	0.000	0.000
1-Sep-2015	11:50:49	0.000	0.000
1-Sep-2015	11:54:49	0.000	0.000
1-Sep-2015	11:58:49	0.000	0.000
1-Sep-2015	12:02:49	0.000	0.000
1-Sep-2015	12:06:49	0.000	0.000
1-Sep-2015	12:10:49	0.000	0.000
1-Sep-2015	12:14:49	0.000	0.000
1-Sep-2015	12:18:49	0.000	0.000
1-Sep-2015	12:22:49	0.000	0.000
1-Sep-2015	12:26:49	0.000	0.000

DUST MONITORING

September 2015

shading indicates values over the threshold

Monitor: 1

Threshold: 0.15 (mg/m^3)

Date	Time	Value (mg/m^3)	TWA (mg/m^3)
1-Sep-2015	12:30:49	0.000	0.000
1-Sep-2015	12:34:49	0.000	0.000
1-Sep-2015	12:38:49	0.000	0.000
1-Sep-2015	12:42:49	0.000	0.000
1-Sep-2015	12:46:49	0.000	0.000
1-Sep-2015	12:50:49	0.000	0.000
1-Sep-2015	12:54:49	0.000	0.000
1-Sep-2015	12:58:49	0.000	0.000
1-Sep-2015	13:02:49	0.000	0.000
1-Sep-2015	13:06:49	0.000	0.000
1-Sep-2015	13:10:49	0.000	0.000
1-Sep-2015	13:14:49	0.000	0.000
1-Sep-2015	13:18:49	0.000	0.000
1-Sep-2015	13:22:49	0.000	0.000
1-Sep-2015	13:26:49	0.000	0.000
1-Sep-2015	13:30:49	0.000	0.000
1-Sep-2015	13:34:49	0.000	0.000
1-Sep-2015	13:38:49	0.000	0.000
1-Sep-2015	13:42:49	0.000	0.000
1-Sep-2015	13:46:49	0.000	0.000
1-Sep-2015	13:50:49	0.000	0.000
1-Sep-2015	13:54:49	0.000	0.000
1-Sep-2015	13:58:49	0.000	0.000
1-Sep-2015	14:02:49	0.000	0.000
1-Sep-2015	14:06:49	0.000	0.000
1-Sep-2015	14:10:49	0.000	0.000
1-Sep-2015	14:14:49	0.000	0.000
1-Sep-2015	14:18:49	0.000	0.000
1-Sep-2015	14:22:49	0.000	0.000
1-Sep-2015	14:26:49	0.000	0.001
1-Sep-2015	14:30:49	0.002	0.001
1-Sep-2015	14:34:49	0.001	0.001
1-Sep-2015	14:38:49	0.000	0.002
1-Sep-2015	14:42:49	0.006	0.004
1-Sep-2015	14:46:49	0.005	0.004
1-Sep-2015	14:50:49	0.000	0.002
1-Sep-2015	14:54:49	0.000	0.000
1-Sep-2015	14:58:49	0.000	0.000
1-Sep-2015	15:02:49	0.000	0.000
1-Sep-2015	15:06:49	0.000	0.000
1-Sep-2015	15:10:49	0.000	0.000

DUST MONITORING

September 2015

shading indicates values over the threshold

Monitor: 1

Threshold: 0.15 (mg/m^3)

Date	Time	Value (mg/m^3)	TWA (mg/m^3)
1-Sep-2015	15:14:49	0.000	0.000
1-Sep-2015	15:18:49	0.000	0.000
1-Sep-2015	15:22:49	0.000	0.000
1-Sep-2015	15:26:49	0.000	0.000
1-Sep-2015	15:30:49	0.000	0.000
1-Sep-2015	15:34:49	0.000	0.000
1-Sep-2015	15:38:49	0.000	0.000
2-Sep-2015	07:09:59	0.006	0.005
2-Sep-2015	07:13:59	0.004	0.005
2-Sep-2015	07:17:59	0.006	0.005
2-Sep-2015	07:21:59	0.004	0.004
2-Sep-2015	07:25:59	0.003	0.003
2-Sep-2015	07:29:59	0.003	0.002
2-Sep-2015	07:33:59	0.001	0.003
2-Sep-2015	07:37:59	0.005	0.003
2-Sep-2015	07:41:59	0.002	0.004
2-Sep-2015	07:45:59	0.004	0.003
2-Sep-2015	07:49:59	0.002	0.003
2-Sep-2015	07:53:59	0.003	0.003
2-Sep-2015	07:57:59	0.003	0.002
2-Sep-2015	08:01:59	0.001	0.001
2-Sep-2015	08:05:59	0.000	0.000
2-Sep-2015	08:09:59	0.000	0.000
2-Sep-2015	08:13:59	0.000	0.000
2-Sep-2015	08:17:59	0.000	0.000
2-Sep-2015	08:21:59	0.000	0.000
2-Sep-2015	08:25:59	0.000	0.000
2-Sep-2015	08:29:59	0.000	0.000
2-Sep-2015	08:33:59	0.001	0.000
2-Sep-2015	08:37:59	0.000	0.001
2-Sep-2015	08:41:59	0.002	0.004
2-Sep-2015	08:45:59	0.011	0.018
2-Sep-2015	08:49:59	0.041	0.017
2-Sep-2015	08:53:59	0.000	0.014
2-Sep-2015	08:57:59	0.000	0.000
2-Sep-2015	09:01:59	0.001	0.012
2-Sep-2015	09:05:59	0.035	0.012
2-Sep-2015	09:09:59	0.000	0.012
2-Sep-2015	09:13:59	0.000	0.000
2-Sep-2015	09:17:59	0.000	0.000
2-Sep-2015	09:21:59	0.000	0.000

DUST MONITORING

September 2015

shading indicates values over the threshold

Monitor: 1

Threshold: 0.15 (mg/m^3)

Date	Time	Value (mg/m^3)	TWA (mg/m^3)
2-Sep-2015	09:25:59	0.000	0.002
2-Sep-2015	09:29:59	0.005	0.016
2-Sep-2015	09:33:59	0.042	0.016
2-Sep-2015	09:37:59	0.000	0.014
2-Sep-2015	09:41:59	0.000	0.001
2-Sep-2015	09:45:59	0.004	0.002
2-Sep-2015	09:49:59	0.002	0.003
2-Sep-2015	09:53:59	0.003	0.002
2-Sep-2015	09:57:59	0.002	0.002
2-Sep-2015	10:01:59	0.000	0.001
2-Sep-2015	10:05:59	0.000	0.000
2-Sep-2015	10:09:59	0.000	0.000
2-Sep-2015	10:13:59	0.000	0.001
2-Sep-2015	10:17:59	0.003	0.019
2-Sep-2015	10:21:59	0.054	0.031
2-Sep-2015	10:25:59	0.036	0.045
2-Sep-2015	10:29:59	0.046	0.033
2-Sep-2015	10:33:59	0.018	0.022
2-Sep-2015	10:37:59	0.002	0.008
2-Sep-2015	10:41:59	0.004	0.003
2-Sep-2015	10:45:59	0.004	0.003
2-Sep-2015	10:49:59	0.001	0.003
2-Sep-2015	10:53:59	0.004	0.017
2-Sep-2015	10:57:59	0.047	0.019
2-Sep-2015	11:01:59	0.005	0.041
2-Sep-2015	11:05:59	0.070	0.026
2-Sep-2015	11:09:59	0.003	0.024
2-Sep-2015	11:13:59	0.000	0.001
2-Sep-2015	11:17:59	0.000	0.001
2-Sep-2015	11:21:59	0.002	0.002
2-Sep-2015	11:25:59	0.004	0.002
2-Sep-2015	11:29:59	0.000	0.001
2-Sep-2015	11:33:59	0.000	0.000
2-Sep-2015	11:37:59	0.000	0.000
2-Sep-2015	11:41:59	0.001	0.000
2-Sep-2015	11:45:59	0.000	0.001
2-Sep-2015	11:49:59	0.002	0.002
2-Sep-2015	11:53:59	0.004	0.002
2-Sep-2015	11:57:59	0.000	0.001
2-Sep-2015	12:01:59	0.000	0.000
2-Sep-2015	12:05:59	0.001	0.000

DUST MONITORING

September 2015

shading indicates values over the threshold

Monitor: 1

Threshold: 0.15 (mg/m^3)

Date	Time	Value (mg/m^3)	TWA (mg/m^3)
2-Sep-2015	12:09:59	0.000	0.000
2-Sep-2015	12:13:59	0.000	0.000
2-Sep-2015	12:17:59	0.000	0.003
2-Sep-2015	12:21:59	0.008	0.005
2-Sep-2015	12:25:59	0.008	0.005
2-Sep-2015	12:29:59	0.000	0.003
2-Sep-2015	12:33:59	0.001	0.007
2-Sep-2015	12:37:59	0.019	0.007
2-Sep-2015	12:41:59	0.000	0.006
2-Sep-2015	12:45:59	0.000	0.000
2-Sep-2015	12:49:59	0.000	0.001
2-Sep-2015	12:53:59	0.002	0.001
2-Sep-2015	12:57:59	0.000	0.001
2-Sep-2015	13:01:59	0.000	0.002
2-Sep-2015	13:05:59	0.005	0.003
2-Sep-2015	13:09:59	0.004	0.004
2-Sep-2015	13:13:59	0.004	0.010
2-Sep-2015	13:17:59	0.022	0.016
2-Sep-2015	13:21:59	0.022	0.019
2-Sep-2015	13:25:59	0.012	0.016
2-Sep-2015	13:29:59	0.013	0.013
2-Sep-2015	13:33:59	0.013	0.013
2-Sep-2015	13:37:59	0.014	0.013
2-Sep-2015	13:41:59	0.013	0.013
2-Sep-2015	13:45:59	0.013	0.013
2-Sep-2015	13:49:59	0.014	0.013
2-Sep-2015	13:53:59	0.013	0.013
2-Sep-2015	13:57:59	0.012	0.013
2-Sep-2015	14:01:59	0.013	0.013
2-Sep-2015	14:05:59	0.015	0.014
2-Sep-2015	14:09:59	0.014	0.016
2-Sep-2015	14:13:59	0.018	0.016
2-Sep-2015	14:17:59	0.015	0.016
2-Sep-2015	14:21:59	0.014	0.014
2-Sep-2015	14:25:59	0.014	0.014
2-Sep-2015	14:29:59	0.014	0.015
2-Sep-2015	14:33:59	0.016	0.015
2-Sep-2015	14:37:59	0.014	0.015
2-Sep-2015	14:41:59	0.014	0.015
2-Sep-2015	14:45:59	0.016	0.015
2-Sep-2015	14:49:59	0.014	0.015

DUST MONITORING

September 2015

shading indicates values over the threshold

Monitor: 1

Threshold: 0.15 (mg/m^3)

Date	Time	Value (mg/m^3)	TWA (mg/m^3)
2-Sep-2015	14:53:59	0.014	0.014
2-Sep-2015	14:57:59	0.015	0.015
2-Sep-2015	15:01:59	0.016	0.016
2-Sep-2015	15:05:59	0.017	0.016
2-Sep-2015	15:09:59	0.016	0.016
2-Sep-2015	15:13:59	0.016	0.015
2-Sep-2015	15:17:59	0.014	0.015
2-Sep-2015	15:21:59	0.015	0.015
2-Sep-2015	15:25:59	0.016	0.016
2-Sep-2015	15:29:59	0.016	0.016
2-Sep-2015	15:33:59	0.016	0.017
2-Sep-2015	15:37:59	0.020	0.018
2-Sep-2015	15:41:59	0.017	0.019
4-Sep-2015	07:30:46	0.055	0.052
4-Sep-2015	07:34:46	0.049	0.050
4-Sep-2015	07:38:46	0.046	0.046
4-Sep-2015	07:42:46	0.042	0.043
4-Sep-2015	07:46:46	0.042	0.041
4-Sep-2015	07:50:46	0.040	0.040
4-Sep-2015	07:54:46	0.038	0.038
4-Sep-2015	07:58:46	0.036	0.036
4-Sep-2015	08:02:46	0.035	0.036
8-Sep-2015	09:50:45	0.000	0.000
8-Sep-2015	09:54:45	0.000	0.000
8-Sep-2015	09:58:45	0.000	0.001
8-Sep-2015	10:02:45	0.002	0.002
8-Sep-2015	10:06:45	0.005	0.003
8-Sep-2015	10:10:45	0.001	0.002
8-Sep-2015	10:14:45	0.000	0.000
8-Sep-2015	10:18:45	0.000	0.000
8-Sep-2015	10:22:45	0.000	0.000
8-Sep-2015	10:26:45	0.000	0.000
8-Sep-2015	10:30:45	0.001	0.000
8-Sep-2015	10:34:45	0.000	0.001
8-Sep-2015	10:38:45	0.001	0.000
8-Sep-2015	10:42:45	0.000	0.000
8-Sep-2015	10:46:45	0.000	0.000
8-Sep-2015	10:50:45	0.001	0.001
8-Sep-2015	10:54:45	0.001	0.001
8-Sep-2015	10:58:45	0.001	0.001
8-Sep-2015	11:02:45	0.001	0.001

DUST MONITORING

September 2015

shading indicates values over the threshold

Monitor: 1

Threshold: 0.15 (mg/m^3)

Date	Time	Value (mg/m^3)	TWA (mg/m^3)
8-Sep-2015	11:06:45	0.001	0.001
8-Sep-2015	11:10:45	0.001	0.001
8-Sep-2015	11:14:45	0.001	0.001
8-Sep-2015	11:18:45	0.001	0.001
8-Sep-2015	11:22:45	0.000	0.000
8-Sep-2015	11:26:45	0.000	0.000
8-Sep-2015	11:30:45	0.001	0.000
8-Sep-2015	11:34:45	0.000	0.001
8-Sep-2015	11:38:45	0.001	0.000
8-Sep-2015	11:42:45	0.000	0.000
8-Sep-2015	11:46:45	0.000	0.000
8-Sep-2015	11:50:45	0.000	0.000
8-Sep-2015	11:54:45	0.000	0.000
8-Sep-2015	11:58:45	0.001	0.000
8-Sep-2015	12:02:45	0.000	0.001
8-Sep-2015	12:06:45	0.001	0.000
8-Sep-2015	12:10:45	0.000	0.001
8-Sep-2015	12:14:45	0.001	0.001
8-Sep-2015	12:18:45	0.003	0.002
8-Sep-2015	12:22:45	0.001	0.001
8-Sep-2015	12:26:45	0.000	0.003
8-Sep-2015	12:30:45	0.007	0.003
8-Sep-2015	12:34:45	0.001	0.003
8-Sep-2015	12:38:45	0.001	0.001
8-Sep-2015	12:42:45	0.002	0.001
8-Sep-2015	12:46:45	0.001	0.001
8-Sep-2015	12:50:45	0.001	0.001
8-Sep-2015	12:54:45	0.000	0.001
8-Sep-2015	12:58:45	0.002	0.001
8-Sep-2015	13:02:45	0.000	0.001
8-Sep-2015	13:06:45	0.001	0.000
8-Sep-2015	13:10:45	0.000	0.000
8-Sep-2015	13:14:45	0.000	0.000
8-Sep-2015	13:18:45	0.000	0.000
8-Sep-2015	13:22:45	0.001	0.000
8-Sep-2015	13:26:45	0.000	0.001
8-Sep-2015	13:30:45	0.002	0.001
8-Sep-2015	13:34:45	0.001	0.001
8-Sep-2015	13:38:45	0.000	0.000
8-Sep-2015	13:42:45	0.000	0.000
8-Sep-2015	13:46:45	0.000	0.000

DUST MONITORING

September 2015

shading indicates values over the threshold

Monitor: 1

Threshold: 0.15 (mg/m^3)

Date	Time	Value (mg/m^3)	TWA (mg/m^3)
8-Sep-2015	13:50:45	0.000	0.001
8-Sep-2015	13:54:45	0.002	0.001
8-Sep-2015	13:58:45	0.001	0.004
8-Sep-2015	14:02:45	0.009	0.019
8-Sep-2015	14:06:45	0.048	0.019
8-Sep-2015	14:10:45	0.001	0.016
8-Sep-2015	14:14:45	0.000	0.000
8-Sep-2015	14:18:45	0.000	0.000
8-Sep-2015	14:22:45	0.000	0.000
8-Sep-2015	14:26:45	0.000	0.000
8-Sep-2015	14:30:45	0.000	0.000
8-Sep-2015	14:34:45	0.000	0.000
8-Sep-2015	14:38:45	0.000	0.000
8-Sep-2015	14:42:45	0.001	0.000
8-Sep-2015	14:46:45	0.000	0.001
8-Sep-2015	14:50:45	0.001	0.001
8-Sep-2015	14:54:45	0.001	0.001
8-Sep-2015	14:58:45	0.000	0.000
8-Sep-2015	15:02:45	0.000	0.000
8-Sep-2015	15:06:45	0.000	0.000
9-Sep-2015	08:18:00	0.015	0.016
9-Sep-2015	08:22:00	0.017	0.015
9-Sep-2015	08:26:00	0.013	0.014
9-Sep-2015	08:30:00	0.013	0.012
9-Sep-2015	08:34:00	0.011	0.012
9-Sep-2015	08:38:00	0.011	0.012
9-Sep-2015	08:42:00	0.013	0.012
9-Sep-2015	08:46:00	0.012	0.012
9-Sep-2015	08:50:00	0.012	0.012
9-Sep-2015	08:54:00	0.012	0.012
9-Sep-2015	08:58:00	0.011	0.011
9-Sep-2015	09:02:00	0.011	0.012
9-Sep-2015	09:06:00	0.013	0.012
9-Sep-2015	09:10:00	0.013	0.012
9-Sep-2015	09:14:00	0.011	0.009
9-Sep-2015	09:18:00	0.004	0.006
9-Sep-2015	09:22:00	0.004	0.005
9-Sep-2015	09:26:00	0.008	0.005
9-Sep-2015	09:30:00	0.004	0.005
9-Sep-2015	09:34:00	0.003	0.004
9-Sep-2015	09:38:00	0.004	0.008

DUST MONITORING

September 2015

shading indicates values over the threshold

Monitor: 1

Threshold: 0.15 (mg/m^3)

Date	Time	Value (mg/m^3)	TWA (mg/m^3)
9-Sep-2015	09:42:00	0.018	0.012
9-Sep-2015	09:46:00	0.015	0.012
9-Sep-2015	09:50:00	0.002	0.007
9-Sep-2015	09:54:00	0.003	0.004
9-Sep-2015	09:58:00	0.006	0.004
9-Sep-2015	10:02:00	0.003	0.022
9-Sep-2015	10:06:00	0.058	0.021
9-Sep-2015	10:10:00	0.001	0.020
9-Sep-2015	10:14:00	0.002	0.001
9-Sep-2015	10:18:00	0.001	0.002
9-Sep-2015	10:22:00	0.002	0.001
9-Sep-2015	10:26:00	0.001	0.009
9-Sep-2015	10:30:00	0.025	0.009
9-Sep-2015	10:34:00	0.001	0.009
9-Sep-2015	10:38:00	0.001	0.001
9-Sep-2015	10:42:00	0.002	0.002
9-Sep-2015	10:46:00	0.002	0.005
9-Sep-2015	10:50:00	0.010	0.005
9-Sep-2015	10:54:00	0.002	0.004
9-Sep-2015	10:58:00	0.001	0.006
9-Sep-2015	11:02:00	0.015	0.007
9-Sep-2015	11:06:00	0.004	0.007
9-Sep-2015	11:10:00	0.003	0.004
9-Sep-2015	11:14:00	0.006	0.004
9-Sep-2015	11:18:00	0.003	0.005
9-Sep-2015	11:22:00	0.006	0.004
9-Sep-2015	11:26:00	0.002	0.003
9-Sep-2015	11:30:00	0.002	0.003
9-Sep-2015	11:34:00	0.004	0.014
9-Sep-2015	11:38:00	0.035	0.015
9-Sep-2015	11:42:00	0.006	0.016
9-Sep-2015	11:46:00	0.006	0.005
9-Sep-2015	11:50:00	0.002	0.004
9-Sep-2015	11:54:00	0.003	0.007
9-Sep-2015	11:58:00	0.016	0.012
9-Sep-2015	12:02:00	0.016	0.019
9-Sep-2015	12:06:00	0.026	0.016
9-Sep-2015	12:10:00	0.006	0.013
9-Sep-2015	12:14:00	0.006	0.009
9-Sep-2015	12:18:00	0.014	0.009
9-Sep-2015	12:22:00	0.006	0.008

DUST MONITORING

September 2015

shading indicates values over the threshold

Monitor: 1

Threshold: 0.15 (mg/m^3)

Date	Time	Value (mg/m^3)	TWA (mg/m^3)
9-Sep-2015	12:26:00	0.004	0.006
9-Sep-2015	12:30:00	0.007	0.006
9-Sep-2015	12:34:00	0.008	0.006
9-Sep-2015	12:38:00	0.004	0.006
9-Sep-2015	12:42:00	0.005	0.004
9-Sep-2015	12:46:00	0.004	0.004
9-Sep-2015	12:50:00	0.003	0.003
9-Sep-2015	12:54:00	0.003	0.003
9-Sep-2015	12:58:00	0.004	0.003
9-Sep-2015	13:02:00	0.003	0.004
9-Sep-2015	13:06:00	0.004	0.005
9-Sep-2015	13:10:00	0.007	0.008
9-Sep-2015	13:14:00	0.013	0.011
9-Sep-2015	13:18:00	0.012	0.011
9-Sep-2015	13:22:00	0.009	0.012
9-Sep-2015	13:26:00	0.015	0.010
9-Sep-2015	13:30:00	0.007	0.010
9-Sep-2015	13:34:00	0.007	0.007
9-Sep-2015	13:38:00	0.007	0.007
9-Sep-2015	13:42:00	0.007	0.008
9-Sep-2015	13:46:00	0.009	0.008
9-Sep-2015	13:50:00	0.007	0.008
9-Sep-2015	13:54:00	0.007	0.010
9-Sep-2015	13:58:00	0.015	0.009
9-Sep-2015	14:02:00	0.005	0.008
9-Sep-2015	14:06:00	0.005	0.005
9-Sep-2015	14:10:00	0.005	0.005
9-Sep-2015	14:14:00	0.005	0.005
10-Sep-2015	09:07:26	0.000	0.000
10-Sep-2015	09:11:26	0.000	0.000
10-Sep-2015	09:15:26	0.000	0.000
10-Sep-2015	09:19:26	0.000	0.000
10-Sep-2015	09:23:26	0.000	0.000
10-Sep-2015	09:27:26	0.000	0.000
10-Sep-2015	09:31:26	0.000	0.000
10-Sep-2015	09:35:26	0.000	0.000
10-Sep-2015	09:39:26	0.000	0.000
10-Sep-2015	09:43:26	0.000	0.000
10-Sep-2015	09:47:26	0.000	0.000
10-Sep-2015	09:51:26	0.001	0.000
10-Sep-2015	09:55:26	0.000	0.000

DUST MONITORING

September 2015

shading indicates values over the threshold

Monitor: 1

Threshold: 0.15 (mg/m^3)

Date	Time	Value (mg/m^3)	TWA (mg/m^3)
10-Sep-2015	09:59:26	0.000	0.000
10-Sep-2015	10:03:26	0.000	0.000
10-Sep-2015	10:07:26	0.000	0.000
10-Sep-2015	10:11:26	0.000	0.000
10-Sep-2015	10:15:26	0.000	0.000
10-Sep-2015	10:19:26	0.000	0.000
10-Sep-2015	10:23:26	0.001	0.001
10-Sep-2015	10:27:26	0.001	0.001
10-Sep-2015	10:31:26	0.000	0.000
10-Sep-2015	10:35:26	0.000	0.000
10-Sep-2015	10:39:26	0.000	0.000
10-Sep-2015	10:43:26	0.000	0.000
10-Sep-2015	10:47:26	0.000	0.000
10-Sep-2015	10:51:26	0.000	0.000
10-Sep-2015	10:55:26	0.000	0.000
10-Sep-2015	10:59:26	0.000	0.000
10-Sep-2015	11:03:26	0.000	0.000
10-Sep-2015	11:07:26	0.000	0.000
10-Sep-2015	11:11:26	0.000	0.001
10-Sep-2015	11:15:26	0.002	0.001
10-Sep-2015	11:19:26	0.000	0.001
10-Sep-2015	11:23:26	0.000	0.000
10-Sep-2015	11:27:26	0.000	0.000
10-Sep-2015	11:31:26	0.000	0.000
10-Sep-2015	11:35:26	0.000	0.000
10-Sep-2015	11:39:26	0.000	0.000
10-Sep-2015	11:43:26	0.000	0.000
10-Sep-2015	11:47:26	0.000	0.000
10-Sep-2015	11:51:26	0.001	0.000
10-Sep-2015	11:55:26	0.000	0.000
10-Sep-2015	11:59:26	0.000	0.000
10-Sep-2015	12:03:26	0.000	0.000
10-Sep-2015	12:07:26	0.000	0.000
10-Sep-2015	12:11:26	0.000	0.000
10-Sep-2015	12:15:26	0.000	0.000
10-Sep-2015	12:19:26	0.000	0.000
10-Sep-2015	12:23:26	0.000	0.001
10-Sep-2015	12:27:26	0.004	0.001
10-Sep-2015	12:31:26	0.000	0.001
10-Sep-2015	12:35:26	0.000	0.000
10-Sep-2015	12:39:26	0.001	0.001

DUST MONITORING

September 2015

shading indicates values over the threshold

Monitor: 1

Threshold: 0.15 (mg/m^3)

Date	Time	Value (mg/m^3)	TWA (mg/m^3)
10-Sep-2015	12:43:26	0.002	0.001
10-Sep-2015	12:47:26	0.001	0.002
10-Sep-2015	12:51:26	0.004	0.002
10-Sep-2015	12:55:26	0.000	0.001
10-Sep-2015	12:59:26	0.000	0.000
10-Sep-2015	13:03:26	0.000	0.000
10-Sep-2015	13:07:26	0.001	0.001
10-Sep-2015	13:11:26	0.001	0.001
10-Sep-2015	13:15:26	0.002	0.002
10-Sep-2015	13:19:26	0.002	0.001
10-Sep-2015	13:23:26	0.000	0.001
10-Sep-2015	13:27:26	0.000	0.000
10-Sep-2015	13:31:26	0.000	0.000
10-Sep-2015	13:35:26	0.000	0.000
10-Sep-2015	13:39:26	0.000	0.000
10-Sep-2015	13:43:26	0.000	0.000
10-Sep-2015	13:47:26	0.000	0.000
10-Sep-2015	13:51:26	0.000	0.000
10-Sep-2015	13:55:26	0.000	0.000
10-Sep-2015	13:59:26	0.000	0.000
10-Sep-2015	14:03:26	0.000	0.000
10-Sep-2015	14:07:26	0.000	0.000
10-Sep-2015	14:11:26	0.000	0.000
10-Sep-2015	14:15:26	0.001	0.000
10-Sep-2015	14:19:26	0.000	0.000
10-Sep-2015	14:23:26	0.000	0.001
10-Sep-2015	14:27:26	0.003	0.001
10-Sep-2015	14:31:26	0.000	0.001
10-Sep-2015	14:35:26	0.000	0.000
10-Sep-2015	14:39:26	0.000	0.000
10-Sep-2015	14:43:26	0.000	0.000
10-Sep-2015	14:47:26	0.000	0.000
10-Sep-2015	14:51:26	0.000	0.000
11-Sep-2015	07:42:05	0.514	0.513
11-Sep-2015	07:46:05	0.512	0.453
11-Sep-2015	07:50:05	0.332	0.356
11-Sep-2015	07:54:05	0.225	0.246
11-Sep-2015	07:58:05	0.181	0.154
11-Sep-2015	08:02:05	0.057	0.093
11-Sep-2015	08:06:05	0.041	0.044
11-Sep-2015	08:10:05	0.034	0.037

DUST MONITORING

September 2015

shading indicates values over the threshold

Monitor: 1

Threshold: 0.15 (mg/m^3)

Date	Time	Value (mg/m^3)	TWA (mg/m^3)
11-Sep-2015	08:14:05	0.036	0.032
11-Sep-2015	08:18:05	0.027	0.030
11-Sep-2015	08:22:05	0.027	0.027
11-Sep-2015	08:26:05	0.027	0.027
11-Sep-2015	08:30:05	0.026	0.026
11-Sep-2015	08:34:05	0.025	0.025
11-Sep-2015	08:38:05	0.023	0.024
11-Sep-2015	08:42:05	0.025	0.023
11-Sep-2015	08:46:05	0.021	0.021
11-Sep-2015	08:50:05	0.018	0.020
11-Sep-2015	08:54:05	0.021	0.019
11-Sep-2015	08:58:05	0.019	0.019
11-Sep-2015	09:02:05	0.018	0.017
11-Sep-2015	09:06:05	0.013	0.015
11-Sep-2015	09:10:05	0.013	0.013
11-Sep-2015	09:14:05	0.013	0.013
11-Sep-2015	09:18:05	0.013	0.013
11-Sep-2015	09:22:05	0.014	0.013
11-Sep-2015	09:26:05	0.012	0.013
11-Sep-2015	09:30:05	0.012	0.012
11-Sep-2015	09:34:05	0.011	0.011
11-Sep-2015	09:38:05	0.010	0.010
11-Sep-2015	09:42:05	0.008	0.008
11-Sep-2015	09:46:05	0.007	0.007
11-Sep-2015	09:50:05	0.006	0.006
11-Sep-2015	09:54:05	0.005	0.005
11-Sep-2015	09:58:05	0.003	0.003
11-Sep-2015	10:02:05	0.002	0.003
11-Sep-2015	10:06:05	0.005	0.003
11-Sep-2015	10:10:05	0.002	0.005
11-Sep-2015	10:14:05	0.009	0.004
11-Sep-2015	10:18:05	0.001	0.003
11-Sep-2015	10:22:05	0.000	0.000
11-Sep-2015	10:26:05	0.000	0.001
11-Sep-2015	10:30:05	0.002	0.001
11-Sep-2015	10:34:05	0.000	0.001
11-Sep-2015	10:38:05	0.000	0.001
11-Sep-2015	10:42:05	0.003	0.001
11-Sep-2015	10:46:05	0.000	0.001
11-Sep-2015	10:50:05	0.000	0.000
11-Sep-2015	10:54:05	0.001	0.002

DUST MONITORING

September 2015

shading indicates values over the threshold

Monitor: 1

Threshold: 0.15 (mg/m^3)

Date	Time	Value (mg/m^3)	TWA (mg/m^3)
11-Sep-2015	10:58:05	0.006	0.003
11-Sep-2015	11:02:05	0.002	0.003
11-Sep-2015	11:06:05	0.000	0.001
11-Sep-2015	11:10:05	0.000	0.000
11-Sep-2015	11:14:05	0.000	0.000
11-Sep-2015	11:18:05	0.000	0.000
11-Sep-2015	11:22:05	0.000	0.000
11-Sep-2015	11:26:05	0.000	0.000
11-Sep-2015	11:30:05	0.000	0.000
11-Sep-2015	11:34:05	0.001	0.000
11-Sep-2015	11:38:05	0.000	0.000
11-Sep-2015	11:42:05	0.000	0.000
11-Sep-2015	11:46:05	0.000	0.000
11-Sep-2015	11:50:05	0.000	0.000
11-Sep-2015	11:54:05	0.000	0.000
11-Sep-2015	11:58:05	0.000	0.000
11-Sep-2015	12:02:05	0.000	0.000
11-Sep-2015	12:06:05	0.000	0.000
11-Sep-2015	12:10:05	0.001	0.001
11-Sep-2015	12:14:05	0.001	0.001
11-Sep-2015	12:18:05	0.000	0.000
11-Sep-2015	12:22:05	0.000	0.000
11-Sep-2015	12:26:05	0.001	0.000
11-Sep-2015	12:30:05	0.000	0.000
11-Sep-2015	12:34:05	0.000	0.000
11-Sep-2015	12:38:05	0.000	0.000
11-Sep-2015	12:42:05	0.000	0.000
11-Sep-2015	12:46:05	0.000	0.000
11-Sep-2015	12:50:05	0.000	0.000
11-Sep-2015	12:54:05	0.000	0.000
11-Sep-2015	12:58:05	0.000	0.000
11-Sep-2015	13:02:05	0.000	0.000
11-Sep-2015	13:06:05	0.000	0.013
11-Sep-2015	13:10:05	0.040	0.013
11-Sep-2015	13:14:05	0.000	0.013
11-Sep-2015	13:18:05	0.000	0.000
11-Sep-2015	13:22:05	0.000	0.000
11-Sep-2015	13:26:05	0.001	0.000
11-Sep-2015	13:30:05	0.000	0.000
11-Sep-2015	13:34:05	0.000	0.000
11-Sep-2015	13:38:05	0.000	0.000

DUST MONITORING

September 2015

shading indicates values over the threshold

Monitor: 1

Threshold: 0.15 (mg/m^3)

Date	Time	Value (mg/m^3)	TWA (mg/m^3)
11-Sep-2015	13:42:05	0.000	0.000
11-Sep-2015	13:46:05	0.000	0.000
11-Sep-2015	13:50:05	0.001	0.000
11-Sep-2015	13:54:05	0.000	0.000
11-Sep-2015	13:58:05	0.000	0.000
11-Sep-2015	14:02:05	0.000	0.000
11-Sep-2015	14:06:05	0.000	0.000
11-Sep-2015	14:10:05	0.000	0.000
11-Sep-2015	14:14:05	0.000	0.000
11-Sep-2015	14:18:05	0.000	0.000
11-Sep-2015	14:22:05	0.000	0.000
11-Sep-2015	14:26:05	0.000	0.000
11-Sep-2015	14:30:05	0.000	0.000
11-Sep-2015	14:34:05	0.000	0.000
11-Sep-2015	14:38:05	0.000	0.000
11-Sep-2015	14:42:05	0.000	0.000
11-Sep-2015	14:46:05	0.000	0.000
11-Sep-2015	14:50:05	0.000	0.000
11-Sep-2015	14:54:05	0.000	0.000
11-Sep-2015	14:58:05	0.000	0.000
11-Sep-2015	15:02:05	0.000	0.000
11-Sep-2015	15:06:05	0.000	0.007
11-Sep-2015	15:10:05	0.022	0.008
11-Sep-2015	15:14:05	0.001	0.008
11-Sep-2015	15:18:05	0.000	0.001
11-Sep-2015	15:22:05	0.001	0.005
11-Sep-2015	15:26:05	0.015	0.005
11-Sep-2015	15:30:05	0.000	0.005
11-Sep-2015	15:34:05	0.000	0.000
11-Sep-2015	15:38:05	0.000	0.000
11-Sep-2015	15:42:05	0.000	0.000
11-Sep-2015	15:46:05	0.000	0.000
11-Sep-2015	15:50:05	0.000	0.003
11-Sep-2015	15:54:05	0.009	0.005
14-Sep-2015	07:21:59	0.000	0.000
14-Sep-2015	07:25:59	0.000	0.000
14-Sep-2015	07:29:59	0.000	0.000
14-Sep-2015	07:33:59	0.000	0.000
14-Sep-2015	07:37:59	0.000	0.000
14-Sep-2015	07:41:59	0.000	0.000
14-Sep-2015	07:45:59	0.000	0.000

DUST MONITORING

September 2015

shading indicates values over the threshold

Monitor: 1

Threshold: 0.15 (mg/m^3)

Date	Time	Value (mg/m^3)	TWA (mg/m^3)
14-Sep-2015	07:49:59	0.001	0.000
14-Sep-2015	07:53:59	0.000	0.001
14-Sep-2015	07:57:59	0.001	0.000
14-Sep-2015	08:01:59	0.000	0.000
14-Sep-2015	08:05:59	0.000	0.000
14-Sep-2015	08:09:59	0.000	0.000
14-Sep-2015	08:13:59	0.000	0.000
14-Sep-2015	08:17:59	0.000	0.000
14-Sep-2015	08:21:59	0.000	0.000
14-Sep-2015	08:25:59	0.001	0.000
14-Sep-2015	08:29:59	0.000	0.000
14-Sep-2015	08:33:59	0.000	0.000
14-Sep-2015	08:37:59	0.000	0.000
14-Sep-2015	08:41:59	0.000	0.000
14-Sep-2015	08:45:59	0.000	0.000
14-Sep-2015	08:49:59	0.000	0.000
14-Sep-2015	08:53:59	0.000	0.000
14-Sep-2015	08:57:59	0.000	0.001
14-Sep-2015	09:01:59	0.003	0.001
14-Sep-2015	09:05:59	0.001	0.001
14-Sep-2015	09:09:59	0.000	0.000
14-Sep-2015	09:13:59	0.000	0.000
14-Sep-2015	09:17:59	0.000	0.000
14-Sep-2015	09:21:59	0.000	0.000
14-Sep-2015	09:25:59	0.000	0.000
14-Sep-2015	09:29:59	0.000	0.000
14-Sep-2015	09:33:59	0.000	0.000
14-Sep-2015	09:37:59	0.000	0.000
14-Sep-2015	09:41:59	0.000	0.000
14-Sep-2015	09:45:59	0.000	0.000
14-Sep-2015	09:49:59	0.000	0.000
14-Sep-2015	09:53:59	0.000	0.000
14-Sep-2015	09:57:59	0.000	0.000
14-Sep-2015	10:01:59	0.000	0.000
14-Sep-2015	10:05:59	0.000	0.000
14-Sep-2015	10:09:59	0.000	0.000
14-Sep-2015	10:13:59	0.000	0.000
14-Sep-2015	10:17:59	0.001	0.000
14-Sep-2015	10:21:59	0.000	0.000
14-Sep-2015	10:25:59	0.000	0.000
14-Sep-2015	10:29:59	0.000	0.000

DUST MONITORING

September 2015

shading indicates values over the threshold

Monitor: 1

Threshold: 0.15 (mg/m^3)

Date	Time	Value (mg/m^3)	TWA (mg/m^3)
14-Sep-2015	10:33:59	0.000	0.000
14-Sep-2015	10:37:59	0.000	0.000
14-Sep-2015	10:41:59	0.000	0.000
14-Sep-2015	10:45:59	0.000	0.000
14-Sep-2015	10:49:59	0.000	0.000
14-Sep-2015	10:53:59	0.000	0.000
14-Sep-2015	10:57:59	0.000	0.000
14-Sep-2015	11:01:59	0.000	0.000
14-Sep-2015	11:05:59	0.000	0.000
14-Sep-2015	11:09:59	0.000	0.000
14-Sep-2015	11:13:59	0.000	0.000
14-Sep-2015	11:17:59	0.000	0.000
14-Sep-2015	11:21:59	0.000	0.000
14-Sep-2015	11:25:59	0.000	0.000
14-Sep-2015	11:29:59	0.000	0.000
14-Sep-2015	11:33:59	0.000	0.000
14-Sep-2015	11:37:59	0.000	0.000
14-Sep-2015	11:41:59	0.000	0.000
14-Sep-2015	11:45:59	0.000	0.000
14-Sep-2015	11:49:59	0.000	0.000
14-Sep-2015	11:53:59	0.000	0.000
14-Sep-2015	11:57:59	0.000	0.000
14-Sep-2015	12:01:59	0.000	0.000
14-Sep-2015	12:05:59	0.000	0.000
14-Sep-2015	12:09:59	0.000	0.000
14-Sep-2015	12:13:59	0.000	0.000
14-Sep-2015	12:17:59	0.000	0.000
14-Sep-2015	12:21:59	0.000	0.000
14-Sep-2015	12:25:59	0.000	0.000
14-Sep-2015	12:29:59	0.000	0.000
14-Sep-2015	12:33:59	0.000	0.000
14-Sep-2015	12:37:59	0.000	0.000
14-Sep-2015	12:41:59	0.000	0.000
14-Sep-2015	12:45:59	0.000	0.000
14-Sep-2015	12:49:59	0.000	0.000
14-Sep-2015	12:53:59	0.000	0.000
14-Sep-2015	12:57:59	0.000	0.000
14-Sep-2015	13:01:59	0.000	0.000
14-Sep-2015	13:05:59	0.000	0.000
14-Sep-2015	13:09:59	0.000	0.000
14-Sep-2015	13:13:59	0.000	0.000

DUST MONITORING

September 2015

shading indicates values over the threshold

Monitor: 1

Threshold: 0.15 (mg/m^3)

Date	Time	Value (mg/m^3)	TWA (mg/m^3)
14-Sep-2015	13:17:59	0.000	0.000
14-Sep-2015	13:21:59	0.000	0.000
14-Sep-2015	13:25:59	0.000	0.000
14-Sep-2015	13:29:59	0.000	0.000
14-Sep-2015	13:33:59	0.000	0.000
14-Sep-2015	13:37:59	0.000	0.000
14-Sep-2015	13:41:59	0.001	0.000
14-Sep-2015	13:45:59	0.000	0.000
14-Sep-2015	13:49:59	0.000	0.000
14-Sep-2015	13:53:59	0.000	0.000
14-Sep-2015	13:57:59	0.000	0.000
14-Sep-2015	14:01:59	0.000	0.000
14-Sep-2015	14:05:59	0.000	0.000
14-Sep-2015	14:09:59	0.000	0.000
14-Sep-2015	14:13:59	0.000	0.000
14-Sep-2015	14:17:59	0.000	0.000
14-Sep-2015	14:21:59	0.000	0.000
14-Sep-2015	14:25:59	0.001	0.001
14-Sep-2015	14:29:59	0.003	0.003
14-Sep-2015	14:33:59	0.005	0.003
14-Sep-2015	14:37:59	0.000	0.002
14-Sep-2015	14:41:59	0.000	0.001
14-Sep-2015	14:45:59	0.004	0.001
14-Sep-2015	14:49:59	0.000	0.001
14-Sep-2015	14:53:59	0.000	0.000
14-Sep-2015	14:57:59	0.000	0.000
14-Sep-2015	15:01:59	0.000	0.000
14-Sep-2015	15:05:59	0.000	0.000
14-Sep-2015	15:09:59	0.000	0.000
14-Sep-2015	15:13:59	0.001	0.000
14-Sep-2015	15:17:59	0.000	0.000
14-Sep-2015	15:21:59	0.000	0.000
14-Sep-2015	15:25:59	0.000	0.000
14-Sep-2015	15:29:59	0.000	0.000
14-Sep-2015	15:33:59	0.000	0.000
14-Sep-2015	15:37:59	0.000	0.000
14-Sep-2015	15:41:59	0.000	0.000
14-Sep-2015	15:45:59	0.000	0.000
14-Sep-2015	15:49:59	0.000	0.000
14-Sep-2015	15:53:59	0.000	0.000
14-Sep-2015	15:57:59	0.000	0.000

DUST MONITORING

September 2015

shading indicates values over the threshold

Monitor: 1

Threshold: 0.15 (mg/m^3)

Date	Time	Value (mg/m^3)	TWA (mg/m^3)
14-Sep-2015	16:01:59	0.000	0.000
14-Sep-2015	16:05:59	0.000	0.000
14-Sep-2015	16:09:59	0.000	0.000
14-Sep-2015	16:13:59	0.000	0.000
14-Sep-2015	16:17:59	0.000	0.000
14-Sep-2015	16:21:59	0.000	0.000
15-Sep-2015	07:00:51	0.000	0.023
15-Sep-2015	07:04:51	0.045	0.015
15-Sep-2015	07:08:51	0.000	0.015
15-Sep-2015	07:12:51	0.000	0.004
15-Sep-2015	07:16:51	0.011	0.004
15-Sep-2015	07:20:51	0.000	0.020
15-Sep-2015	07:24:51	0.050	0.023
15-Sep-2015	07:28:51	0.018	0.032
15-Sep-2015	07:32:51	0.028	0.015
15-Sep-2015	07:36:51	0.000	0.011
15-Sep-2015	07:40:51	0.006	0.033
15-Sep-2015	07:44:51	0.093	0.034
15-Sep-2015	07:48:51	0.004	0.032
15-Sep-2015	07:52:51	0.000	0.001
15-Sep-2015	07:56:51	0.000	0.000
15-Sep-2015	08:00:51	0.000	0.000
15-Sep-2015	08:04:51	0.000	0.006
15-Sep-2015	08:08:51	0.017	0.011
15-Sep-2015	08:12:51	0.016	0.024
15-Sep-2015	08:16:51	0.039	0.018
15-Sep-2015	08:20:51	0.000	0.013
15-Sep-2015	08:24:51	0.000	0.002
15-Sep-2015	08:28:51	0.006	0.002
15-Sep-2015	08:32:51	0.000	0.019
15-Sep-2015	08:36:51	0.052	0.017
15-Sep-2015	08:40:51	0.000	0.017
15-Sep-2015	08:44:51	0.000	0.007
15-Sep-2015	08:48:51	0.021	0.025
15-Sep-2015	08:52:51	0.054	0.027
15-Sep-2015	08:56:51	0.005	0.020
15-Sep-2015	09:00:51	0.000	0.010
15-Sep-2015	09:04:51	0.024	0.020
15-Sep-2015	09:08:51	0.036	0.036
15-Sep-2015	09:12:51	0.047	0.030
15-Sep-2015	09:16:51	0.008	0.018

DUST MONITORING

September 2015

shading indicates values over the threshold

Monitor: 1

Threshold: 0.15 (mg/m^3)

Date	Time	Value (mg/m^3)	TWA (mg/m^3)
15-Sep-2015	09:20:51	0.000	0.003
15-Sep-2015	09:24:51	0.000	0.000
15-Sep-2015	09:28:51	0.000	0.005
15-Sep-2015	09:32:51	0.014	0.008
15-Sep-2015	09:36:51	0.009	0.013
15-Sep-2015	09:40:51	0.016	0.184
15-Sep-2015	09:44:51	0.526	0.183
15-Sep-2015	09:48:51	0.007	0.180
15-Sep-2015	09:52:51	0.007	0.006
15-Sep-2015	09:56:51	0.004	0.004
15-Sep-2015	10:00:51	0.000	0.001
15-Sep-2015	10:04:51	0.000	0.000
15-Sep-2015	10:08:51	0.000	0.003
15-Sep-2015	10:12:51	0.008	0.004
15-Sep-2015	10:16:51	0.005	0.004
15-Sep-2015	10:20:51	0.000	0.002
15-Sep-2015	10:24:51	0.001	0.000
15-Sep-2015	10:28:51	0.000	0.000
15-Sep-2015	10:32:51	0.000	0.025
15-Sep-2015	10:36:51	0.074	0.049
15-Sep-2015	10:40:51	0.072	0.049
15-Sep-2015	10:44:51	0.002	0.025
15-Sep-2015	10:48:51	0.000	0.001
15-Sep-2015	10:52:51	0.000	0.000
15-Sep-2015	10:56:51	0.000	0.054
15-Sep-2015	11:00:51	0.161	0.055
15-Sep-2015	11:04:51	0.003	0.055
15-Sep-2015	11:08:51	0.001	0.001
15-Sep-2015	11:12:51	0.000	0.001
15-Sep-2015	11:16:51	0.002	0.001
15-Sep-2015	11:20:51	0.000	0.001
15-Sep-2015	11:24:51	0.001	0.020
15-Sep-2015	11:28:51	0.058	0.020
15-Sep-2015	11:32:51	0.001	0.020
15-Sep-2015	11:36:51	0.002	0.001
15-Sep-2015	11:40:51	0.000	0.001
15-Sep-2015	11:44:51	0.000	0.000
15-Sep-2015	11:48:51	0.000	0.037
15-Sep-2015	11:52:51	0.110	0.037
15-Sep-2015	11:56:51	0.000	0.037
15-Sep-2015	12:00:51	0.002	0.001

DUST MONITORING

September 2015

shading indicates values over the threshold

Monitor: 1

Threshold: 0.15 (mg/m^3)

Date	Time	Value (mg/m^3)	TWA (mg/m^3)
15-Sep-2015	12:04:51	0.000	0.001
15-Sep-2015	12:08:51	0.000	0.000
15-Sep-2015	12:12:51	0.000	0.000
15-Sep-2015	12:16:51	0.001	0.000
15-Sep-2015	12:20:51	0.000	0.000
15-Sep-2015	12:24:51	0.000	0.000
15-Sep-2015	12:28:51	0.000	0.000
15-Sep-2015	12:32:51	0.000	0.000
15-Sep-2015	12:36:51	0.000	0.000
15-Sep-2015	12:40:51	0.000	0.000
15-Sep-2015	12:44:51	0.000	0.001
15-Sep-2015	12:48:51	0.002	0.120
15-Sep-2015	12:52:51	0.358	0.121
15-Sep-2015	12:56:51	0.003	0.120
15-Sep-2015	13:00:51	0.000	0.001
15-Sep-2015	13:04:51	0.000	0.000
15-Sep-2015	13:08:51	0.000	0.000
15-Sep-2015	13:12:51	0.001	0.001
15-Sep-2015	13:16:51	0.001	0.001
15-Sep-2015	13:20:51	0.001	0.001
15-Sep-2015	13:24:51	0.000	0.002
15-Sep-2015	13:28:51	0.005	0.003
15-Sep-2015	13:32:51	0.004	0.004
15-Sep-2015	13:36:51	0.002	0.002
15-Sep-2015	13:40:51	0.000	0.173
15-Sep-2015	13:44:51	0.518	0.177
15-Sep-2015	13:48:51	0.014	0.324
15-Sep-2015	13:52:51	0.439	0.153
15-Sep-2015	13:56:51	0.006	0.151
15-Sep-2015	14:00:51	0.008	0.005
15-Sep-2015	14:04:51	0.000	0.003
15-Sep-2015	14:08:51	0.000	0.020
15-Sep-2015	14:12:51	0.060	0.020
15-Sep-2015	14:16:51	0.001	0.021
15-Sep-2015	14:20:51	0.002	0.002
15-Sep-2015	14:24:51	0.002	0.003
15-Sep-2015	14:28:51	0.004	0.008
15-Sep-2015	14:32:51	0.017	0.007
15-Sep-2015	14:36:51	0.001	0.006
15-Sep-2015	14:40:51	0.001	0.002
15-Sep-2015	14:44:51	0.005	0.002

DUST MONITORING

September 2015

shading indicates values over the threshold

Monitor: 1

Threshold: 0.15 (mg/m^3)

Date	Time	Value (mg/m^3)	TWA (mg/m^3)
15-Sep-2015	14:48:51	0.001	0.002
15-Sep-2015	14:52:51	0.000	0.000
15-Sep-2015	14:56:51	0.000	0.000
15-Sep-2015	15:00:51	0.000	0.000
15-Sep-2015	15:04:51	0.000	0.026
15-Sep-2015	15:08:51	0.079	0.027
15-Sep-2015	15:12:51	0.002	0.027
15-Sep-2015	15:16:51	0.001	0.002
17-Sep-2015	07:15:03	0.000	0.000
17-Sep-2015	07:19:03	0.000	0.000
17-Sep-2015	07:23:03	0.000	0.000
17-Sep-2015	07:27:03	0.000	0.000
17-Sep-2015	07:31:03	0.000	0.000
17-Sep-2015	07:35:03	0.000	0.000
17-Sep-2015	07:39:03	0.000	0.000
17-Sep-2015	07:43:03	0.001	0.000
17-Sep-2015	07:47:03	0.000	0.000
17-Sep-2015	07:51:03	0.000	0.000
17-Sep-2015	07:55:03	0.000	0.000
17-Sep-2015	07:59:03	0.000	0.000
17-Sep-2015	08:03:03	0.000	0.006
17-Sep-2015	08:07:03	0.018	0.007
17-Sep-2015	08:11:03	0.004	0.008
17-Sep-2015	08:15:03	0.001	0.002
17-Sep-2015	08:19:03	0.000	0.000
17-Sep-2015	08:23:03	0.000	0.000
17-Sep-2015	08:27:03	0.001	0.001
17-Sep-2015	08:31:03	0.002	0.002
17-Sep-2015	08:35:03	0.002	0.002
17-Sep-2015	08:39:03	0.001	0.002
17-Sep-2015	08:43:03	0.002	0.001
17-Sep-2015	08:47:03	0.000	0.001
17-Sep-2015	08:51:03	0.002	0.001
17-Sep-2015	08:55:03	0.001	0.002
17-Sep-2015	08:59:03	0.003	0.002
17-Sep-2015	09:03:03	0.002	0.002
17-Sep-2015	09:07:03	0.000	0.001
17-Sep-2015	09:11:03	0.000	0.000
17-Sep-2015	09:15:03	0.000	0.000
17-Sep-2015	09:19:03	0.000	0.000
17-Sep-2015	09:23:03	0.000	0.000

DUST MONITORING

September 2015

shading indicates values over the threshold

Monitor: 1

Threshold: 0.15 (mg/m^3)

Date	Time	Value (mg/m^3)	TWA (mg/m^3)
17-Sep-2015	09:27:03	0.000	0.000
17-Sep-2015	09:31:03	0.000	0.000
17-Sep-2015	09:35:03	0.000	0.000
17-Sep-2015	09:39:03	0.000	0.000
17-Sep-2015	09:43:03	0.000	0.000
17-Sep-2015	09:47:03	0.000	0.000
17-Sep-2015	09:51:03	0.000	0.001
17-Sep-2015	09:55:03	0.003	0.001
17-Sep-2015	09:59:03	0.000	0.001
17-Sep-2015	10:03:03	0.001	0.001
17-Sep-2015	10:07:03	0.001	0.004
17-Sep-2015	10:11:03	0.011	0.005
17-Sep-2015	10:15:03	0.003	0.005
17-Sep-2015	10:19:03	0.000	0.001
17-Sep-2015	10:23:03	0.000	0.001
17-Sep-2015	10:27:03	0.003	0.001
17-Sep-2015	10:31:03	0.000	0.001
17-Sep-2015	10:35:03	0.001	0.001
17-Sep-2015	10:39:03	0.001	0.001
17-Sep-2015	10:43:03	0.000	0.001
17-Sep-2015	10:47:03	0.003	0.001
17-Sep-2015	10:51:03	0.001	0.001
17-Sep-2015	10:55:03	0.000	0.000
17-Sep-2015	10:59:03	0.000	0.000
17-Sep-2015	11:03:03	0.000	0.002
17-Sep-2015	11:07:03	0.006	0.002
17-Sep-2015	11:11:03	0.001	0.002
17-Sep-2015	11:15:03	0.000	0.000
17-Sep-2015	11:19:03	0.000	0.000
17-Sep-2015	11:23:03	0.001	0.003
17-Sep-2015	11:27:03	0.007	0.003
17-Sep-2015	11:31:03	0.001	0.003
17-Sep-2015	11:35:03	0.000	0.001
17-Sep-2015	11:39:03	0.001	0.001
17-Sep-2015	11:43:03	0.003	0.003
17-Sep-2015	11:47:03	0.004	0.002
17-Sep-2015	11:51:03	0.000	0.001
17-Sep-2015	11:55:03	0.000	0.000
17-Sep-2015	11:59:03	0.000	0.000
17-Sep-2015	12:03:03	0.001	0.000
17-Sep-2015	12:07:03	0.000	0.002

DUST MONITORING

September 2015

shading indicates values over the threshold

Monitor: 1

Threshold: 0.15 (mg/m^3)

Date	Time	Value (mg/m^3)	TWA (mg/m^3)
17-Sep-2015	12:11:03	0.005	0.002
17-Sep-2015	12:15:03	0.000	0.002
17-Sep-2015	12:19:03	0.000	0.000
17-Sep-2015	12:23:03	0.000	0.000
17-Sep-2015	12:27:03	0.000	0.000
17-Sep-2015	12:31:03	0.000	0.000
17-Sep-2015	12:35:03	0.000	0.000
17-Sep-2015	12:39:03	0.000	0.000
17-Sep-2015	12:43:03	0.000	0.000
17-Sep-2015	12:47:03	0.000	0.000
17-Sep-2015	12:51:03	0.000	0.000
17-Sep-2015	12:55:03	0.000	0.002
17-Sep-2015	12:59:03	0.006	0.002
17-Sep-2015	13:03:03	0.000	0.002
17-Sep-2015	13:07:03	0.001	0.001
17-Sep-2015	13:11:03	0.001	0.001
17-Sep-2015	13:15:03	0.000	0.000
17-Sep-2015	13:19:03	0.000	0.001
17-Sep-2015	13:23:03	0.002	0.001
17-Sep-2015	13:27:03	0.000	0.001
17-Sep-2015	13:31:03	0.000	0.000
17-Sep-2015	13:35:03	0.000	0.000
17-Sep-2015	13:39:03	0.000	0.000
17-Sep-2015	13:43:03	0.001	0.000
17-Sep-2015	13:47:03	0.000	0.001
17-Sep-2015	13:51:03	0.002	0.001
17-Sep-2015	13:55:03	0.000	0.001
17-Sep-2015	13:59:03	0.001	0.007
17-Sep-2015	14:03:03	0.021	0.007
17-Sep-2015	14:07:03	0.000	0.007
17-Sep-2015	14:11:03	0.001	0.002
17-Sep-2015	14:15:03	0.005	0.003
17-Sep-2015	14:19:03	0.002	0.003
17-Sep-2015	14:23:03	0.002	0.001
17-Sep-2015	14:27:03	0.000	0.001
17-Sep-2015	14:31:03	0.000	0.000
17-Sep-2015	14:35:03	0.000	0.000
17-Sep-2015	14:39:03	0.000	0.000
17-Sep-2015	14:43:03	0.000	0.000
17-Sep-2015	14:47:03	0.000	0.000
17-Sep-2015	14:51:03	0.000	0.000

DUST MONITORING

September 2015

shading indicates values over the threshold

Monitor: 1

Threshold: 0.15 (mg/m^3)

Date	Time	Value (mg/m^3)	TWA (mg/m^3)
17-Sep-2015	14:55:03	0.000	0.001
17-Sep-2015	14:59:03	0.002	0.001
17-Sep-2015	15:03:03	0.000	0.001
17-Sep-2015	15:07:03	0.000	0.000
17-Sep-2015	15:11:03	0.000	0.001
17-Sep-2015	15:15:03	0.004	0.001
17-Sep-2015	15:19:03	0.000	0.001
17-Sep-2015	15:23:03	0.000	0.000
17-Sep-2015	15:27:03	0.000	0.000
17-Sep-2015	15:31:03	0.000	0.000
17-Sep-2015	15:35:03	0.000	0.000
17-Sep-2015	15:39:03	0.000	0.008
17-Sep-2015	15:43:03	0.023	0.011
17-Sep-2015	15:47:03	0.011	0.024
17-Sep-2015	15:51:03	0.038	0.023
17-Sep-2015	15:55:03	0.020	0.042
17-Sep-2015	15:59:03	0.067	0.029
17-Sep-2015	16:03:03	0.000	0.022
17-Sep-2015	16:07:03	0.000	0.000
17-Sep-2015	16:11:03	0.000	0.000
17-Sep-2015	16:15:03	0.000	0.000
17-Sep-2015	16:19:03	0.000	0.000
22-Sep-2015	07:44:19	0.000	0.000
22-Sep-2015	07:48:19	0.000	0.000
22-Sep-2015	07:52:19	0.000	0.000
22-Sep-2015	07:56:19	0.000	0.000
22-Sep-2015	08:00:19	0.000	0.000
22-Sep-2015	08:04:19	0.000	0.000
22-Sep-2015	08:08:19	0.000	0.000
22-Sep-2015	08:12:19	0.000	0.003
22-Sep-2015	08:16:19	0.008	0.003
22-Sep-2015	08:20:19	0.000	0.003
22-Sep-2015	08:24:19	0.000	0.000
22-Sep-2015	08:28:19	0.000	0.000
22-Sep-2015	08:32:19	0.000	0.000
22-Sep-2015	08:36:19	0.001	0.001
22-Sep-2015	08:40:19	0.001	0.001
22-Sep-2015	08:44:19	0.000	0.000
22-Sep-2015	08:48:19	0.000	0.000
22-Sep-2015	08:52:19	0.000	0.000
22-Sep-2015	08:56:19	0.000	0.000

DUST MONITORING

September 2015

shading indicates values over the threshold

Monitor: 1

Threshold: 0.15 (mg/m^3)

Date	Time	Value (mg/m^3)	TWA (mg/m^3)
22-Sep-2015	09:00:19	0.000	0.000
22-Sep-2015	09:04:19	0.001	0.000
22-Sep-2015	09:08:19	0.000	0.000
22-Sep-2015	09:12:19	0.000	0.000
22-Sep-2015	09:16:19	0.000	0.000
22-Sep-2015	09:20:19	0.000	0.000
22-Sep-2015	09:24:19	0.000	0.000
22-Sep-2015	09:28:19	0.000	0.000
22-Sep-2015	09:32:19	0.000	0.000
22-Sep-2015	09:36:19	0.000	0.000
22-Sep-2015	09:40:19	0.000	0.000
22-Sep-2015	09:44:19	0.000	0.000
22-Sep-2015	09:48:19	0.000	0.000
22-Sep-2015	09:52:19	0.000	0.000
22-Sep-2015	09:56:19	0.000	0.000
22-Sep-2015	10:00:19	0.000	0.000
22-Sep-2015	10:04:19	0.000	0.000
22-Sep-2015	10:08:19	0.000	0.000
22-Sep-2015	10:12:19	0.000	0.000
22-Sep-2015	10:16:19	0.000	0.000
22-Sep-2015	10:20:19	0.000	0.000
22-Sep-2015	10:24:19	0.000	0.000
22-Sep-2015	10:28:19	0.000	0.000
22-Sep-2015	10:32:19	0.000	0.000
22-Sep-2015	10:36:19	0.000	0.000
22-Sep-2015	10:40:19	0.000	0.000
22-Sep-2015	10:44:19	0.000	0.000
22-Sep-2015	10:48:19	0.000	0.000
22-Sep-2015	10:52:19	0.000	0.000
22-Sep-2015	10:56:19	0.000	0.000
22-Sep-2015	11:00:19	0.000	0.000
22-Sep-2015	11:04:19	0.000	0.000
22-Sep-2015	11:08:19	0.000	0.000
22-Sep-2015	11:12:19	0.000	0.000
22-Sep-2015	11:16:19	0.000	0.000
22-Sep-2015	11:20:19	0.000	0.000
22-Sep-2015	11:24:19	0.000	0.000
22-Sep-2015	11:28:19	0.000	0.000
22-Sep-2015	11:32:19	0.000	0.000
22-Sep-2015	11:36:19	0.000	0.000
22-Sep-2015	11:40:19	0.000	0.000

DUST MONITORING

September 2015

shading indicates values over the threshold

Monitor: 1

Threshold: 0.15 (mg/m^3)

Date	Time	Value (mg/m^3)	TWA (mg/m^3)
22-Sep-2015	11:44:19	0.000	0.000
22-Sep-2015	11:48:19	0.000	0.000
22-Sep-2015	11:52:19	0.000	0.000
22-Sep-2015	11:56:19	0.000	0.000
22-Sep-2015	12:00:19	0.000	0.000
22-Sep-2015	12:04:19	0.000	0.000
22-Sep-2015	12:08:19	0.000	0.000
22-Sep-2015	12:12:19	0.000	0.000
22-Sep-2015	12:16:19	0.000	0.000
22-Sep-2015	12:20:19	0.001	0.001
22-Sep-2015	12:24:19	0.001	0.001
22-Sep-2015	12:28:19	0.000	0.000
22-Sep-2015	12:32:19	0.000	0.000
22-Sep-2015	12:36:19	0.000	0.000
22-Sep-2015	12:40:19	0.000	0.000
22-Sep-2015	12:44:19	0.001	0.000
22-Sep-2015	12:48:19	0.000	0.000
22-Sep-2015	12:52:19	0.000	0.000
22-Sep-2015	12:56:19	0.000	0.000
22-Sep-2015	13:00:19	0.000	0.000
22-Sep-2015	13:04:19	0.000	0.000
22-Sep-2015	13:08:19	0.000	0.000
22-Sep-2015	13:12:19	0.000	0.000
22-Sep-2015	13:16:19	0.000	0.000
22-Sep-2015	13:20:19	0.000	0.000
22-Sep-2015	13:24:19	0.000	0.000
22-Sep-2015	13:28:19	0.000	0.000
22-Sep-2015	13:32:19	0.000	0.000
22-Sep-2015	13:36:19	0.000	0.000
22-Sep-2015	13:40:19	0.000	0.000
22-Sep-2015	13:44:19	0.000	0.000
22-Sep-2015	13:48:19	0.000	0.000
22-Sep-2015	13:52:19	0.000	0.000
22-Sep-2015	13:56:19	0.000	0.000
22-Sep-2015	14:00:19	0.000	0.000
22-Sep-2015	14:04:19	0.000	0.000
22-Sep-2015	14:08:19	0.000	0.000
22-Sep-2015	14:12:19	0.000	0.000
22-Sep-2015	14:16:19	0.000	0.000
22-Sep-2015	14:20:19	0.000	0.000
22-Sep-2015	14:24:19	0.000	0.000

DUST MONITORING

September 2015

shading indicates values over the threshold

Monitor: 1

Threshold: 0.15 (mg/m^3)

Date	Time	Value (mg/m^3)	TWA (mg/m^3)
22-Sep-2015	14:28:19	0.000	0.000
22-Sep-2015	14:32:19	0.000	0.000
22-Sep-2015	14:36:19	0.000	0.000
22-Sep-2015	14:40:19	0.000	0.000
22-Sep-2015	14:44:19	0.000	0.000
22-Sep-2015	14:48:19	0.000	0.000
22-Sep-2015	14:52:19	0.000	0.000
22-Sep-2015	14:56:19	0.000	0.000
22-Sep-2015	15:00:19	0.000	0.000
22-Sep-2015	15:04:19	0.000	0.000
22-Sep-2015	15:08:19	0.000	0.000
22-Sep-2015	15:12:19	0.000	0.000
22-Sep-2015	15:16:19	0.000	0.000
22-Sep-2015	15:20:19	0.000	0.000
22-Sep-2015	15:24:19	0.000	0.000
22-Sep-2015	15:28:19	0.001	0.000
22-Sep-2015	15:32:19	0.000	0.000
22-Sep-2015	15:36:19	0.000	0.000
22-Sep-2015	15:40:19	0.000	0.000
22-Sep-2015	15:44:19	0.001	0.000
22-Sep-2015	15:48:19	0.000	0.000
22-Sep-2015	15:52:19	0.000	0.000
22-Sep-2015	15:56:19	0.000	0.000
22-Sep-2015	16:00:19	0.000	0.000
22-Sep-2015	16:04:19	0.000	0.000
22-Sep-2015	16:08:19	0.000	0.000
23-Sep-2015	10:08:18	0.000	0.000
23-Sep-2015	10:12:18	0.000	0.000
23-Sep-2015	10:16:18	0.000	0.000
23-Sep-2015	10:20:18	0.000	0.000
23-Sep-2015	10:24:18	0.000	0.001
23-Sep-2015	10:28:18	0.002	0.001
23-Sep-2015	10:32:18	0.000	0.001
23-Sep-2015	10:36:18	0.000	0.000
23-Sep-2015	10:40:18	0.000	0.000
23-Sep-2015	10:44:18	0.000	0.000
23-Sep-2015	10:48:18	0.000	0.000
23-Sep-2015	10:52:18	0.000	0.000
23-Sep-2015	10:56:18	0.000	0.000
23-Sep-2015	11:00:18	0.000	0.000
23-Sep-2015	11:04:18	0.000	0.000

DUST MONITORING

September 2015

shading indicates values over the threshold

Monitor: 1

Threshold: 0.15 (mg/m^3)

Date	Time	Value (mg/m^3)	TWA (mg/m^3)
23-Sep-2015	11:08:18	0.000	0.000
23-Sep-2015	11:12:18	0.000	0.000
23-Sep-2015	11:16:18	0.000	0.000
23-Sep-2015	11:20:18	0.000	0.000
23-Sep-2015	11:24:18	0.000	0.001
23-Sep-2015	11:28:18	0.002	0.001
23-Sep-2015	11:32:18	0.000	0.001
23-Sep-2015	11:36:18	0.002	0.001
23-Sep-2015	11:40:18	0.000	0.001
23-Sep-2015	11:44:18	0.000	0.000
23-Sep-2015	11:48:18	0.000	0.000
23-Sep-2015	11:52:18	0.000	0.000
23-Sep-2015	11:56:18	0.000	0.000
23-Sep-2015	12:00:18	0.000	0.000
23-Sep-2015	12:04:18	0.000	0.000
23-Sep-2015	12:08:18	0.000	0.000
23-Sep-2015	12:12:18	0.000	0.000
23-Sep-2015	12:16:18	0.000	0.000
23-Sep-2015	12:20:18	0.000	0.000
23-Sep-2015	12:24:18	0.000	0.000
23-Sep-2015	12:28:18	0.000	0.000
23-Sep-2015	12:32:18	0.000	0.000
23-Sep-2015	12:36:18	0.000	0.000
23-Sep-2015	12:40:18	0.000	0.004
23-Sep-2015	12:44:18	0.012	0.004
23-Sep-2015	12:48:18	0.000	0.004
23-Sep-2015	12:52:18	0.000	0.000
23-Sep-2015	12:56:18	0.000	0.000
23-Sep-2015	13:00:18	0.000	0.000
23-Sep-2015	13:04:18	0.000	0.000
23-Sep-2015	13:08:18	0.000	0.000
23-Sep-2015	13:12:18	0.000	0.000
23-Sep-2015	13:16:18	0.000	0.000
23-Sep-2015	13:20:18	0.000	0.000
23-Sep-2015	13:24:18	0.000	0.000
23-Sep-2015	13:28:18	0.000	0.000
23-Sep-2015	13:32:18	0.000	0.000
23-Sep-2015	13:36:18	0.000	0.000
23-Sep-2015	13:40:18	0.000	0.000
23-Sep-2015	13:44:18	0.000	0.000
23-Sep-2015	13:48:18	0.000	0.000

DUST MONITORING

September 2015

shading indicates values over the threshold

Monitor: 1

Threshold: 0.15 (mg/m^3)

Date	Time	Value (mg/m^3)	TWA (mg/m^3)
23-Sep-2015	13:52:18	0.000	0.000
23-Sep-2015	13:56:18	0.000	0.000
23-Sep-2015	14:00:18	0.000	0.000
23-Sep-2015	14:04:18	0.001	0.000
23-Sep-2015	14:08:18	0.000	0.000
23-Sep-2015	14:12:18	0.000	0.000
23-Sep-2015	14:16:18	0.000	0.000
23-Sep-2015	14:20:18	0.000	0.000
23-Sep-2015	14:24:18	0.000	0.000
23-Sep-2015	14:28:18	0.000	0.000
23-Sep-2015	14:32:18	0.000	0.000
23-Sep-2015	14:36:18	0.000	0.000
23-Sep-2015	14:40:18	0.000	0.000
23-Sep-2015	14:44:18	0.000	0.000
23-Sep-2015	14:48:18	0.000	0.001
23-Sep-2015	14:52:18	0.002	0.001
23-Sep-2015	14:56:18	0.000	0.001
23-Sep-2015	15:00:18	0.000	0.000
23-Sep-2015	15:04:18	0.000	0.000
23-Sep-2015	15:08:18	0.000	0.000
23-Sep-2015	15:12:18	0.000	0.000
23-Sep-2015	15:16:18	0.000	0.000
23-Sep-2015	15:20:18	0.000	0.000
23-Sep-2015	15:24:18	0.000	0.000
23-Sep-2015	15:28:18	0.000	0.000
23-Sep-2015	15:32:18	0.000	0.000
24-Sep-2015	09:02:40	0.000	0.000
24-Sep-2015	09:06:40	0.000	0.000
24-Sep-2015	09:10:40	0.000	0.000
24-Sep-2015	09:14:40	0.000	0.000
24-Sep-2015	09:18:40	0.000	0.000
24-Sep-2015	09:22:40	0.000	0.000
24-Sep-2015	09:26:40	0.000	0.000
24-Sep-2015	09:30:40	0.000	0.000
24-Sep-2015	09:34:40	0.000	0.000
24-Sep-2015	09:38:40	0.000	0.000
24-Sep-2015	09:42:40	0.000	0.000
24-Sep-2015	09:46:40	0.000	0.000
24-Sep-2015	09:50:40	0.000	0.000
24-Sep-2015	09:54:40	0.000	0.000
24-Sep-2015	09:58:40	0.000	0.000

DUST MONITORING

September 2015

shading indicates values over the threshold

Monitor: 1

Threshold: 0.15 (mg/m^3)

Date	Time	Value (mg/m^3)	TWA (mg/m^3)
24-Sep-2015	10:02:40	0.000	0.000
24-Sep-2015	10:06:40	0.000	0.000
24-Sep-2015	10:10:40	0.000	0.000
24-Sep-2015	10:14:40	0.000	0.000
24-Sep-2015	10:18:40	0.000	0.000
24-Sep-2015	10:22:40	0.000	0.000
24-Sep-2015	10:26:40	0.000	0.000
24-Sep-2015	10:30:40	0.000	0.000
24-Sep-2015	10:34:40	0.000	0.000
24-Sep-2015	10:38:40	0.000	0.000
24-Sep-2015	10:42:40	0.000	0.000
24-Sep-2015	10:46:40	0.000	0.000
24-Sep-2015	10:50:40	0.000	0.000
24-Sep-2015	10:54:40	0.000	0.000
24-Sep-2015	10:58:40	0.000	0.000
24-Sep-2015	11:02:40	0.000	0.000
24-Sep-2015	11:06:40	0.000	0.000
24-Sep-2015	11:10:40	0.000	0.000
24-Sep-2015	11:14:40	0.000	0.000
24-Sep-2015	11:18:40	0.000	0.000
24-Sep-2015	11:22:40	0.000	0.000
24-Sep-2015	11:26:40	0.000	0.000
24-Sep-2015	11:30:40	0.000	0.000
24-Sep-2015	11:34:40	0.000	0.000
24-Sep-2015	11:38:40	0.000	0.000
24-Sep-2015	11:42:40	0.000	0.000
24-Sep-2015	11:46:40	0.000	0.000
24-Sep-2015	11:50:40	0.000	0.000
24-Sep-2015	11:54:40	0.000	0.000
24-Sep-2015	11:58:40	0.000	0.000
24-Sep-2015	12:02:40	0.000	0.000
24-Sep-2015	12:06:40	0.000	0.000
24-Sep-2015	12:10:40	0.000	0.000
24-Sep-2015	12:14:40	0.000	0.000
24-Sep-2015	12:18:40	0.000	0.000
24-Sep-2015	12:22:40	0.000	0.000
24-Sep-2015	12:26:40	0.000	0.000
24-Sep-2015	12:30:40	0.000	0.000
24-Sep-2015	12:34:40	0.000	0.000
24-Sep-2015	12:38:40	0.000	0.000
24-Sep-2015	12:42:40	0.000	0.000

DUST MONITORING

September 2015

shading indicates values over the threshold

Monitor: 1

Threshold: 0.15 (mg/m^3)

Date	Time	Value (mg/m^3)	TWA (mg/m^3)
24-Sep-2015	12:46:40	0.000	0.000
24-Sep-2015	12:50:40	0.000	0.000
24-Sep-2015	12:54:40	0.000	0.000
24-Sep-2015	12:58:40	0.000	0.000
24-Sep-2015	13:02:40	0.000	0.000
24-Sep-2015	13:06:40	0.000	0.000
24-Sep-2015	13:10:40	0.000	0.000
24-Sep-2015	13:14:40	0.000	0.000
24-Sep-2015	13:18:40	0.000	0.000
24-Sep-2015	13:22:40	0.000	0.000
24-Sep-2015	13:26:40	0.000	0.000
24-Sep-2015	13:30:40	0.000	0.000
24-Sep-2015	13:34:40	0.000	0.000
24-Sep-2015	13:38:40	0.000	0.000
24-Sep-2015	13:42:40	0.000	0.000
24-Sep-2015	13:46:40	0.000	0.000
24-Sep-2015	13:50:40	0.000	0.000
24-Sep-2015	13:54:40	0.000	0.000
24-Sep-2015	13:58:40	0.000	0.000
24-Sep-2015	14:02:40	0.000	0.000
24-Sep-2015	14:06:40	0.000	0.000
24-Sep-2015	14:10:40	0.000	0.000
24-Sep-2015	14:14:40	0.000	0.000
24-Sep-2015	14:18:40	0.000	0.000
24-Sep-2015	14:22:40	0.000	0.000
24-Sep-2015	14:26:40	0.000	0.000
24-Sep-2015	14:30:40	0.000	0.000
24-Sep-2015	14:34:40	0.000	0.000
24-Sep-2015	14:38:40	0.000	0.000
24-Sep-2015	14:42:40	0.000	0.000
24-Sep-2015	14:46:40	0.000	0.000
24-Sep-2015	14:50:40	0.000	0.000
24-Sep-2015	14:54:40	0.000	0.000
24-Sep-2015	14:58:40	0.000	0.000
24-Sep-2015	15:02:40	0.000	0.000
24-Sep-2015	15:06:40	0.000	0.000
24-Sep-2015	15:10:40	0.000	0.000
24-Sep-2015	15:14:40	0.000	0.000
24-Sep-2015	15:18:40	0.000	0.000
24-Sep-2015	15:22:40	0.000	0.000
24-Sep-2015	15:26:40	0.000	0.000

DUST MONITORING

September 2015

shading indicates values over the threshold

Monitor: 1

Threshold: 0.15 (mg/m^3)

Date	Time	Value (mg/m^3)	TWA (mg/m^3)
24-Sep-2015	15:30:40	0.000	0.000
24-Sep-2015	15:34:40	0.000	0.000
24-Sep-2015	15:38:40	0.000	0.000
24-Sep-2015	15:42:40	0.000	0.000
24-Sep-2015	15:46:40	0.000	0.000
24-Sep-2015	15:50:40	0.000	0.000
24-Sep-2015	15:54:40	0.000	0.000
30-Sep-2015	07:29:50	0.000	0.000
30-Sep-2015	07:33:50	0.000	0.000
30-Sep-2015	07:37:50	0.000	0.000
30-Sep-2015	07:41:50	0.000	0.000
30-Sep-2015	07:45:50	0.000	0.000
30-Sep-2015	07:49:50	0.000	0.000
30-Sep-2015	07:53:50	0.000	0.000
30-Sep-2015	07:57:50	0.000	0.000
30-Sep-2015	08:01:50	0.000	0.000
30-Sep-2015	08:05:50	0.000	0.000
30-Sep-2015	08:09:50	0.000	0.000
30-Sep-2015	08:13:50	0.000	0.000
30-Sep-2015	08:17:50	0.001	0.001
30-Sep-2015	08:21:50	0.003	0.002
30-Sep-2015	08:25:50	0.001	0.001
30-Sep-2015	08:29:50	0.000	0.001
30-Sep-2015	08:33:50	0.002	0.008
30-Sep-2015	08:37:50	0.022	0.012
30-Sep-2015	08:41:50	0.012	0.011
30-Sep-2015	08:45:50	0.000	0.006
30-Sep-2015	08:49:50	0.006	0.003
30-Sep-2015	08:53:50	0.002	0.003
30-Sep-2015	08:57:50	0.001	0.002
30-Sep-2015	09:01:50	0.003	0.003
30-Sep-2015	09:05:50	0.006	0.012
30-Sep-2015	09:09:50	0.026	0.012
30-Sep-2015	09:13:50	0.004	0.010
30-Sep-2015	09:17:50	0.000	0.001
30-Sep-2015	09:21:50	0.000	0.001
30-Sep-2015	09:25:50	0.003	0.001
30-Sep-2015	09:29:50	0.001	0.006
30-Sep-2015	09:33:50	0.013	0.005
30-Sep-2015	09:37:50	0.000	0.005
30-Sep-2015	09:41:50	0.003	0.002

DUST MONITORING

September 2015

shading indicates values over the threshold

Monitor: 1

Threshold: 0.15 (mg/m^3)

Date	Time	Value (mg/m^3)	TWA (mg/m^3)
30-Sep-2015	09:45:50	0.003	0.002
30-Sep-2015	09:49:50	0.000	0.001
30-Sep-2015	09:53:50	0.000	0.000
30-Sep-2015	09:57:50	0.000	0.001
30-Sep-2015	10:01:50	0.002	0.002
30-Sep-2015	10:05:50	0.005	0.002
30-Sep-2015	10:09:50	0.000	0.002
30-Sep-2015	10:13:50	0.000	0.001
30-Sep-2015	10:17:50	0.002	0.001
30-Sep-2015	10:21:50	0.000	0.001
30-Sep-2015	10:25:50	0.001	0.001
30-Sep-2015	10:29:50	0.002	0.001
30-Sep-2015	10:33:50	0.000	0.002
30-Sep-2015	10:37:50	0.005	0.002
30-Sep-2015	10:41:50	0.001	0.002
30-Sep-2015	10:45:50	0.000	0.001
30-Sep-2015	10:49:50	0.001	0.000
30-Sep-2015	10:53:50	0.000	0.001
30-Sep-2015	10:57:50	0.001	0.001
30-Sep-2015	11:01:50	0.002	0.001
30-Sep-2015	11:05:50	0.000	0.001
30-Sep-2015	11:09:50	0.001	0.000
30-Sep-2015	11:13:50	0.000	0.000
30-Sep-2015	11:17:50	0.000	0.000
30-Sep-2015	11:21:50	0.000	0.000
30-Sep-2015	11:25:50	0.000	0.001
30-Sep-2015	11:29:50	0.002	0.001
30-Sep-2015	11:33:50	0.002	0.001
30-Sep-2015	11:37:50	0.000	0.001
30-Sep-2015	11:41:50	0.002	0.001
30-Sep-2015	11:45:50	0.000	0.001
30-Sep-2015	11:49:50	0.000	0.000
30-Sep-2015	11:53:50	0.001	0.000
30-Sep-2015	11:57:50	0.000	0.000
30-Sep-2015	12:01:50	0.000	0.002
30-Sep-2015	12:05:50	0.005	0.002
30-Sep-2015	12:09:50	0.001	0.002
30-Sep-2015	12:13:50	0.000	0.000
30-Sep-2015	12:17:50	0.000	0.000
30-Sep-2015	12:21:50	0.000	0.000
30-Sep-2015	12:25:50	0.000	0.000

DUST MONITORING

September 2015

shading indicates values over the threshold

Monitor: 1

Threshold: 0.15 (mg/m^3)

Date	Time	Value (mg/m^3)	TWA (mg/m^3)
30-Sep-2015	12:29:50	0.000	0.000
30-Sep-2015	12:33:50	0.000	0.001
30-Sep-2015	12:37:50	0.002	0.001
30-Sep-2015	12:41:50	0.000	0.001
30-Sep-2015	12:45:50	0.000	0.004
30-Sep-2015	12:49:50	0.011	0.004
30-Sep-2015	12:53:50	0.000	0.004
30-Sep-2015	12:57:50	0.000	0.001
30-Sep-2015	13:01:50	0.003	0.001
30-Sep-2015	13:05:50	0.000	0.001
30-Sep-2015	13:09:50	0.000	0.000
30-Sep-2015	13:13:50	0.000	0.001
30-Sep-2015	13:17:50	0.004	0.002
30-Sep-2015	13:21:50	0.003	0.003
30-Sep-2015	13:25:50	0.002	0.002
30-Sep-2015	13:29:50	0.000	0.001
30-Sep-2015	13:33:50	0.002	0.001
30-Sep-2015	13:37:50	0.001	0.001
30-Sep-2015	13:41:50	0.001	0.001
30-Sep-2015	13:45:50	0.000	0.001
30-Sep-2015	13:49:50	0.002	0.001
30-Sep-2015	13:53:50	0.000	0.001
30-Sep-2015	13:57:50	0.000	0.003
30-Sep-2015	14:01:50	0.008	0.003
30-Sep-2015	14:05:50	0.001	0.009
30-Sep-2015	14:09:50	0.017	0.008
30-Sep-2015	14:13:50	0.005	0.009
30-Sep-2015	14:17:50	0.005	0.004
30-Sep-2015	14:21:50	0.001	0.007
30-Sep-2015	14:25:50	0.014	0.006
30-Sep-2015	14:29:50	0.004	0.007
30-Sep-2015	14:33:50	0.002	0.004
30-Sep-2015	14:37:50	0.005	0.003
30-Sep-2015	14:41:50	0.001	0.002
30-Sep-2015	14:45:50	0.000	0.006
30-Sep-2015	14:49:50	0.016	0.011
30-Sep-2015	14:53:50	0.017	0.018
30-Sep-2015	14:57:50	0.021	0.013
30-Sep-2015	15:01:50	0.002	0.009
30-Sep-2015	15:05:50	0.003	0.003
30-Sep-2015	15:09:50	0.003	0.003

DUST MONITORING

September 2015

shading indicates values over the threshold

Monitor: 1

Threshold: 0.15 (mg/m^3)

Date	Time	Value (mg/m^3)	TWA (mg/m^3)
30-Sep-2015	15:13:50	0.004	0.008
30-Sep-2015	15:17:50	0.017	0.011

DUST MONITORING

September 2015

shading indicates values over the threshold

Monitor: 2

Threshold: 0.15 (mg/m^3)

Date	Time	Value (mg/m^3)	TWA (mg/m^3)
2-Sep-2015	10:13:55	0.101	0.100
2-Sep-2015	10:17:55	0.098	0.156
2-Sep-2015	10:21:55	0.268	0.257
2-Sep-2015	10:25:55	0.406	0.275
2-Sep-2015	10:29:55	0.151	0.217
2-Sep-2015	10:33:55	0.094	0.120
2-Sep-2015	10:37:55	0.115	0.100
2-Sep-2015	10:41:55	0.090	0.098
2-Sep-2015	10:45:55	0.090	0.091
2-Sep-2015	10:49:55	0.093	0.092
2-Sep-2015	10:53:55	0.092	0.092
2-Sep-2015	10:57:55	0.090	0.090
2-Sep-2015	11:01:55	0.089	0.092
2-Sep-2015	11:05:55	0.098	0.093
2-Sep-2015	11:09:55	0.092	0.094
2-Sep-2015	11:13:55	0.091	0.092
2-Sep-2015	11:17:55	0.093	0.106
2-Sep-2015	11:21:55	0.135	0.106
2-Sep-2015	11:25:55	0.089	0.104
2-Sep-2015	11:29:55	0.089	0.089
2-Sep-2015	11:33:55	0.089	0.089
2-Sep-2015	11:37:55	0.090	0.089
2-Sep-2015	11:41:55	0.088	0.088
2-Sep-2015	11:45:55	0.087	0.096
2-Sep-2015	11:49:55	0.114	0.099
2-Sep-2015	11:53:55	0.095	0.102
2-Sep-2015	11:57:55	0.098	0.106
2-Sep-2015	12:01:55	0.126	0.107
2-Sep-2015	12:05:55	0.096	0.107
2-Sep-2015	12:09:55	0.098	0.097
2-Sep-2015	12:13:55	0.096	0.096
2-Sep-2015	12:17:55	0.093	0.097
2-Sep-2015	12:21:55	0.102	0.099
2-Sep-2015	12:25:55	0.102	0.099
2-Sep-2015	12:29:55	0.092	0.095
2-Sep-2015	12:33:55	0.092	0.091
2-Sep-2015	12:37:55	0.090	0.091
2-Sep-2015	12:41:55	0.092	0.091
2-Sep-2015	12:45:55	0.091	0.091
2-Sep-2015	12:49:55	0.090	0.090
2-Sep-2015	12:53:55	0.089	0.090

DUST MONITORING

September 2015

shading indicates values over the threshold

Monitor: 2

Threshold: 0.15 (mg/m^3)

Date	Time	Value (mg/m^3)	TWA (mg/m^3)
2-Sep-2015	12:57:55	0.090	0.089
2-Sep-2015	13:01:55	0.089	0.090
2-Sep-2015	13:05:55	0.090	0.090
2-Sep-2015	13:09:55	0.090	0.090
2-Sep-2015	13:13:55	0.090	0.090
2-Sep-2015	13:17:55	0.091	0.091
2-Sep-2015	13:21:55	0.091	0.092
2-Sep-2015	13:25:55	0.094	0.092
2-Sep-2015	13:29:55	0.092	0.093
2-Sep-2015	13:33:55	0.092	0.093
2-Sep-2015	13:37:55	0.094	0.093
2-Sep-2015	13:41:55	0.094	0.093
2-Sep-2015	13:45:55	0.092	0.093
2-Sep-2015	13:49:55	0.093	0.092
2-Sep-2015	13:53:55	0.091	0.092
2-Sep-2015	13:57:55	0.091	0.091
2-Sep-2015	14:01:55	0.092	0.092
2-Sep-2015	14:05:55	0.092	0.099
2-Sep-2015	14:09:55	0.114	0.100
2-Sep-2015	14:13:55	0.094	0.100
2-Sep-2015	14:17:55	0.092	0.093
2-Sep-2015	14:21:55	0.094	0.093
2-Sep-2015	14:25:55	0.092	0.095
2-Sep-2015	14:29:55	0.098	0.094
2-Sep-2015	14:33:55	0.092	0.094
2-Sep-2015	14:37:55	0.093	0.092
2-Sep-2015	14:41:55	0.092	0.093
2-Sep-2015	14:45:55	0.094	0.093
2-Sep-2015	14:49:55	0.094	0.094
2-Sep-2015	14:53:55	0.093	0.094
2-Sep-2015	14:57:55	0.094	0.094
2-Sep-2015	15:01:55	0.095	0.095
2-Sep-2015	15:05:55	0.097	0.096
2-Sep-2015	15:09:55	0.095	0.095
2-Sep-2015	15:13:55	0.092	0.093
2-Sep-2015	15:17:55	0.093	0.093
2-Sep-2015	15:21:55	0.094	0.094
2-Sep-2015	15:25:55	0.094	0.094
2-Sep-2015	15:29:55	0.094	0.094
2-Sep-2015	15:33:55	0.093	0.094
2-Sep-2015	15:37:55	0.094	0.094

DUST MONITORING

September 2015

shading indicates values over the threshold

Monitor: 2

Threshold: 0.15 (mg/m^3)

Date	Time	Value (mg/m^3)	TWA (mg/m^3)
2-Sep-2015	15:41:55	0.094	0.095
2-Sep-2015	15:45:55	0.096	0.095
4-Sep-2015	07:31:20	0.106	0.105
4-Sep-2015	07:35:20	0.103	0.104
4-Sep-2015	07:39:20	0.103	0.102
4-Sep-2015	07:43:20	0.100	0.101
4-Sep-2015	07:47:20	0.099	0.099
4-Sep-2015	07:51:20	0.099	0.099
4-Sep-2015	07:55:20	0.098	0.097
4-Sep-2015	07:59:20	0.095	0.096
4-Sep-2015	08:03:20	0.095	0.095
4-Sep-2015	08:07:20	0.094	0.094
4-Sep-2015	08:11:20	0.092	0.092
4-Sep-2015	08:15:20	0.091	0.092
4-Sep-2015	08:19:20	0.092	0.092
4-Sep-2015	08:23:20	0.092	0.092
4-Sep-2015	08:27:20	0.092	0.092
4-Sep-2015	08:31:20	0.092	0.092
4-Sep-2015	08:35:20	0.092	0.092
4-Sep-2015	08:39:20	0.092	0.091
4-Sep-2015	08:43:20	0.090	0.091
4-Sep-2015	08:47:20	0.091	0.092
4-Sep-2015	08:51:20	0.095	0.094
4-Sep-2015	08:55:20	0.095	0.095
4-Sep-2015	08:59:20	0.095	0.095
4-Sep-2015	09:03:20	0.094	0.095
4-Sep-2015	09:07:20	0.096	0.094
4-Sep-2015	09:11:20	0.092	0.093
4-Sep-2015	09:15:20	0.092	0.092
4-Sep-2015	09:19:20	0.092	0.094
4-Sep-2015	09:23:20	0.097	0.112
4-Sep-2015	09:27:20	0.147	0.127
4-Sep-2015	09:31:20	0.138	0.126
4-Sep-2015	09:35:20	0.093	0.109
4-Sep-2015	09:39:20	0.097	0.111
4-Sep-2015	09:43:20	0.142	0.132
4-Sep-2015	09:47:20	0.157	0.136
4-Sep-2015	09:51:20	0.108	0.127
4-Sep-2015	09:55:20	0.117	0.110
4-Sep-2015	09:59:20	0.104	0.109
4-Sep-2015	10:03:20	0.106	0.104

DUST MONITORING

September 2015

shading indicates values over the threshold

Monitor: 2

Threshold: 0.15 (mg/m^3)

Date	Time	Value (mg/m^3)	TWA (mg/m^3)
4-Sep-2015	10:07:20	0.103	0.130
4-Sep-2015	10:11:20	0.182	0.129
4-Sep-2015	10:15:20	0.101	0.238
4-Sep-2015	10:19:20	0.431	0.245
4-Sep-2015	10:23:20	0.202	0.461
4-Sep-2015	10:27:20	0.750	0.398
4-Sep-2015	10:31:20	0.241	0.460
4-Sep-2015	10:35:20	0.390	0.293
4-Sep-2015	10:39:20	0.247	0.268
4-Sep-2015	10:43:20	0.166	0.182
4-Sep-2015	10:47:20	0.134	0.152
4-Sep-2015	10:51:20	0.155	0.153
4-Sep-2015	10:55:20	0.171	0.165
4-Sep-2015	10:59:20	0.170	0.176
4-Sep-2015	11:03:20	0.186	0.181
4-Sep-2015	11:07:20	0.187	0.184
4-Sep-2015	11:11:20	0.179	0.184
4-Sep-2015	11:15:20	0.185	0.184
4-Sep-2015	11:19:20	0.188	0.187
4-Sep-2015	11:23:20	0.188	0.189
4-Sep-2015	11:27:20	0.191	0.191
4-Sep-2015	11:31:20	0.193	0.194
4-Sep-2015	11:35:20	0.199	0.198
4-Sep-2015	11:39:20	0.202	0.202
4-Sep-2015	11:43:20	0.206	0.206
4-Sep-2015	11:47:20	0.209	0.211
4-Sep-2015	11:51:20	0.219	0.216
4-Sep-2015	11:55:20	0.219	0.220
4-Sep-2015	11:59:20	0.222	0.222
4-Sep-2015	12:03:20	0.225	0.225
4-Sep-2015	12:07:20	0.228	0.228
4-Sep-2015	12:11:20	0.232	0.231
4-Sep-2015	12:15:20	0.234	0.235
4-Sep-2015	12:19:20	0.238	0.238
4-Sep-2015	12:23:20	0.241	0.242
4-Sep-2015	12:27:20	0.247	0.247
4-Sep-2015	12:31:20	0.252	0.252
4-Sep-2015	12:35:20	0.257	0.256
4-Sep-2015	12:39:20	0.260	0.260
4-Sep-2015	12:43:20	0.262	0.263
4-Sep-2015	12:47:20	0.266	0.265

DUST MONITORING

September 2015

shading indicates values over the threshold

Monitor: 2

Threshold: 0.15 (mg/m^3)

Date	Time	Value (mg/m^3)	TWA (mg/m^3)
4-Sep-2015	12:51:20	0.268	0.269
4-Sep-2015	12:55:20	0.272	0.269
4-Sep-2015	12:59:20	0.268	0.269
4-Sep-2015	13:03:20	0.268	0.269
4-Sep-2015	13:07:20	0.271	0.269
4-Sep-2015	13:11:20	0.267	0.268
4-Sep-2015	13:15:20	0.267	0.267
4-Sep-2015	13:19:20	0.268	0.267
4-Sep-2015	13:23:20	0.266	0.267
4-Sep-2015	13:27:20	0.266	0.266
4-Sep-2015	13:31:20	0.265	0.265
4-Sep-2015	13:35:20	0.265	0.279
4-Sep-2015	13:39:20	0.308	0.280
4-Sep-2015	13:43:20	0.266	0.281
4-Sep-2015	13:47:20	0.270	0.268
4-Sep-2015	13:51:20	0.268	0.269
4-Sep-2015	13:55:20	0.268	0.267
4-Sep-2015	13:59:20	0.264	0.266
4-Sep-2015	14:03:20	0.266	0.265
4-Sep-2015	14:07:20	0.266	0.266
4-Sep-2015	14:11:20	0.267	0.266
4-Sep-2015	14:15:20	0.265	0.265
4-Sep-2015	14:19:20	0.263	0.264
4-Sep-2015	14:23:20	0.263	0.263
4-Sep-2015	14:27:20	0.263	0.264
4-Sep-2015	14:31:20	0.267	0.265
4-Sep-2015	14:35:20	0.266	0.267
9-Sep-2015	08:11:05	0.029	0.035
9-Sep-2015	08:15:05	0.041	0.037
9-Sep-2015	08:19:05	0.040	0.035
9-Sep-2015	08:23:05	0.025	0.027
9-Sep-2015	08:27:05	0.017	0.018
9-Sep-2015	08:31:05	0.012	0.013
9-Sep-2015	08:35:05	0.009	0.010
9-Sep-2015	08:39:05	0.009	0.009
9-Sep-2015	08:43:05	0.008	0.008
9-Sep-2015	08:47:05	0.006	0.007
9-Sep-2015	08:51:05	0.007	0.006
9-Sep-2015	08:55:05	0.006	0.007
9-Sep-2015	08:59:05	0.007	0.007
9-Sep-2015	09:03:05	0.009	0.007

DUST MONITORING

September 2015

shading indicates values over the threshold

Monitor: 2

Threshold: 0.15 (mg/m^3)

Date	Time	Value (mg/m^3)	TWA (mg/m^3)
9-Sep-2015	09:07:05	0.006	0.007
9-Sep-2015	09:11:05	0.005	0.006
9-Sep-2015	09:15:05	0.007	0.006
9-Sep-2015	09:19:05	0.005	0.010
9-Sep-2015	09:23:05	0.018	0.009
9-Sep-2015	09:27:05	0.005	0.009
9-Sep-2015	09:31:05	0.003	0.004
9-Sep-2015	09:35:05	0.004	0.004
9-Sep-2015	09:39:05	0.006	0.005
9-Sep-2015	09:43:05	0.006	0.007
9-Sep-2015	09:47:05	0.009	0.009
9-Sep-2015	09:51:05	0.011	0.011
9-Sep-2015	09:55:05	0.014	0.013
9-Sep-2015	09:59:05	0.015	0.017
9-Sep-2015	10:03:05	0.021	0.015
9-Sep-2015	10:07:05	0.010	0.013
9-Sep-2015	10:11:05	0.007	0.016
9-Sep-2015	10:15:05	0.031	0.013
9-Sep-2015	10:19:05	0.002	0.013
9-Sep-2015	10:23:05	0.006	0.013
9-Sep-2015	10:27:05	0.030	0.016
9-Sep-2015	10:31:05	0.012	0.017
9-Sep-2015	10:35:05	0.008	0.009
9-Sep-2015	10:39:05	0.007	0.008
9-Sep-2015	10:43:05	0.009	0.015
9-Sep-2015	10:47:05	0.028	0.015
9-Sep-2015	10:51:05	0.008	0.033
9-Sep-2015	10:55:05	0.063	0.025
9-Sep-2015	10:59:05	0.005	0.023
9-Sep-2015	11:03:05	0.002	0.004
9-Sep-2015	11:07:05	0.005	0.014
9-Sep-2015	11:11:05	0.036	0.017
9-Sep-2015	11:15:05	0.009	0.020
9-Sep-2015	11:19:05	0.015	0.015
9-Sep-2015	11:23:05	0.020	0.014
9-Sep-2015	11:27:05	0.007	0.022
9-Sep-2015	11:31:05	0.040	0.023
9-Sep-2015	11:35:05	0.021	0.021
9-Sep-2015	11:39:05	0.001	0.008
9-Sep-2015	11:43:05	0.001	0.001
9-Sep-2015	11:47:05	0.002	0.001

DUST MONITORING

September 2015

shading indicates values over the threshold

Monitor: 2

Threshold: 0.15 (mg/m^3)

Date	Time	Value (mg/m^3)	TWA (mg/m^3)
9-Sep-2015	11:51:05	0.000	0.001
9-Sep-2015	11:55:05	0.000	0.000
9-Sep-2015	11:59:05	0.001	0.001
9-Sep-2015	12:03:05	0.001	0.001
9-Sep-2015	12:07:05	0.000	0.001
9-Sep-2015	12:11:05	0.001	0.001
9-Sep-2015	12:15:05	0.001	0.001
9-Sep-2015	12:19:05	0.001	0.001
9-Sep-2015	12:23:05	0.002	0.002
9-Sep-2015	12:27:05	0.002	0.006
9-Sep-2015	12:31:05	0.014	0.009
9-Sep-2015	12:35:05	0.012	0.013
9-Sep-2015	12:39:05	0.012	0.012
9-Sep-2015	12:43:05	0.011	0.010
9-Sep-2015	12:47:05	0.007	0.010
9-Sep-2015	12:51:05	0.012	0.010
9-Sep-2015	12:55:05	0.012	0.013
9-Sep-2015	12:59:05	0.016	0.016
9-Sep-2015	13:03:05	0.019	0.018
9-Sep-2015	13:07:05	0.018	0.018
9-Sep-2015	13:11:05	0.018	0.019
9-Sep-2015	13:15:05	0.020	0.020
9-Sep-2015	13:19:05	0.021	0.021
9-Sep-2015	13:23:05	0.022	0.018
9-Sep-2015	13:27:05	0.012	0.015
9-Sep-2015	13:31:05	0.011	0.011
9-Sep-2015	13:35:05	0.010	0.010
9-Sep-2015	13:39:05	0.010	0.009
9-Sep-2015	13:43:05	0.006	0.007
9-Sep-2015	13:47:05	0.005	0.005
9-Sep-2015	13:51:05	0.005	0.005
9-Sep-2015	13:55:05	0.004	0.004
9-Sep-2015	13:59:05	0.003	0.003
9-Sep-2015	14:03:05	0.003	0.003
9-Sep-2015	14:07:05	0.003	0.004
9-Sep-2015	14:11:05	0.005	0.004
14-Sep-2015	07:41:44	0.017	0.018
14-Sep-2015	07:45:44	0.019	0.018
14-Sep-2015	07:49:44	0.017	0.018
14-Sep-2015	07:53:44	0.017	0.017
14-Sep-2015	07:57:44	0.016	0.017

DUST MONITORING

September 2015

shading indicates values over the threshold

Monitor: 2

Threshold: 0.15 (mg/m^3)

Date	Time	Value (mg/m^3)	TWA (mg/m^3)
14-Sep-2015	08:01:44	0.017	0.015
14-Sep-2015	08:05:44	0.013	0.014
14-Sep-2015	08:09:44	0.013	0.013
14-Sep-2015	08:13:44	0.013	0.013
14-Sep-2015	08:17:44	0.014	0.015
14-Sep-2015	08:21:44	0.018	0.017
14-Sep-2015	08:25:44	0.019	0.019
15-Sep-2015	07:03:42	0.041	0.032
15-Sep-2015	07:07:42	0.023	0.028
15-Sep-2015	07:11:42	0.019	0.021
15-Sep-2015	07:15:42	0.021	0.027
15-Sep-2015	07:19:42	0.041	0.033
15-Sep-2015	07:23:42	0.038	0.039
15-Sep-2015	07:27:42	0.037	0.036
15-Sep-2015	07:31:42	0.034	0.035
15-Sep-2015	07:35:42	0.034	0.035
15-Sep-2015	07:39:42	0.037	0.035
15-Sep-2015	07:43:42	0.034	0.035
15-Sep-2015	07:47:42	0.034	0.034
15-Sep-2015	07:51:42	0.034	0.034
15-Sep-2015	07:55:42	0.034	0.034
15-Sep-2015	07:59:42	0.033	0.034
15-Sep-2015	08:03:42	0.034	0.035
15-Sep-2015	08:07:42	0.038	0.036
15-Sep-2015	08:11:42	0.036	0.037
15-Sep-2015	08:15:42	0.036	0.037
15-Sep-2015	08:19:42	0.038	0.037
15-Sep-2015	08:23:42	0.038	0.038
15-Sep-2015	08:27:42	0.038	0.038
15-Sep-2015	08:31:42	0.039	0.038
15-Sep-2015	08:35:42	0.037	0.039
15-Sep-2015	08:39:42	0.040	0.039
15-Sep-2015	08:43:42	0.039	0.040
15-Sep-2015	08:47:42	0.040	0.040
15-Sep-2015	08:51:42	0.041	0.041
15-Sep-2015	08:55:42	0.042	0.043
15-Sep-2015	08:59:42	0.045	0.044
15-Sep-2015	09:03:42	0.044	0.044
15-Sep-2015	09:07:42	0.043	0.046
15-Sep-2015	09:11:42	0.052	0.047
15-Sep-2015	09:15:42	0.046	0.049

DUST MONITORING

September 2015

shading indicates values over the threshold

Monitor: 2

Threshold: 0.15 (mg/m^3)

Date	Time	Value (mg/m^3)	TWA (mg/m^3)
15-Sep-2015	09:19:42	0.050	0.047
15-Sep-2015	09:23:42	0.046	0.047
15-Sep-2015	09:27:42	0.046	0.047
15-Sep-2015	09:31:42	0.050	0.048
15-Sep-2015	09:35:42	0.047	0.056
15-Sep-2015	09:39:42	0.071	0.058
15-Sep-2015	09:43:42	0.057	0.062
15-Sep-2015	09:47:42	0.057	0.063
15-Sep-2015	09:51:42	0.076	0.077
15-Sep-2015	09:55:42	0.099	0.080
15-Sep-2015	09:59:42	0.065	0.074
15-Sep-2015	10:03:42	0.057	0.043
15-Sep-2015	10:07:42	0.006	0.045
15-Sep-2015	10:11:42	0.073	0.047
15-Sep-2015	10:15:42	0.063	0.066
15-Sep-2015	10:19:42	0.061	0.062
15-Sep-2015	10:23:42	0.063	0.064
15-Sep-2015	10:27:42	0.068	0.064
15-Sep-2015	10:31:42	0.061	0.066
15-Sep-2015	10:35:42	0.068	0.065
15-Sep-2015	10:39:42	0.066	0.068
15-Sep-2015	10:43:42	0.071	0.069
15-Sep-2015	10:47:42	0.071	0.073
15-Sep-2015	10:51:42	0.076	0.073
15-Sep-2015	10:55:42	0.071	0.072
15-Sep-2015	10:59:42	0.069	0.059
15-Sep-2015	11:03:42	0.037	0.058
15-Sep-2015	11:07:42	0.068	0.059
15-Sep-2015	11:11:42	0.071	0.070
15-Sep-2015	11:15:42	0.071	0.070
15-Sep-2015	11:19:42	0.069	0.072
15-Sep-2015	11:23:42	0.075	0.077
15-Sep-2015	11:27:42	0.086	0.082
15-Sep-2015	11:31:42	0.084	0.071
15-Sep-2015	11:35:42	0.043	0.059
15-Sep-2015	11:39:42	0.051	0.063
15-Sep-2015	11:43:42	0.094	0.062
15-Sep-2015	11:47:42	0.041	0.068
15-Sep-2015	11:51:42	0.070	0.068
15-Sep-2015	11:55:42	0.093	0.060
15-Sep-2015	11:59:42	0.017	0.089

DUST MONITORING

September 2015

shading indicates values over the threshold

Monitor: 2

Threshold: 0.15 (mg/m^3)

Date	Time	Value (mg/m^3)	TWA (mg/m^3)
15-Sep-2015	12:03:42	0.158	0.090
15-Sep-2015	12:07:42	0.096	0.200
15-Sep-2015	12:11:42	0.345	0.177
15-Sep-2015	12:15:42	0.090	0.173
15-Sep-2015	12:19:42	0.085	0.087
15-Sep-2015	12:23:42	0.085	0.086
15-Sep-2015	12:27:42	0.087	0.088
15-Sep-2015	12:31:42	0.093	0.088
15-Sep-2015	12:35:42	0.084	0.089
15-Sep-2015	12:39:42	0.090	0.085
15-Sep-2015	12:43:42	0.082	0.088
15-Sep-2015	12:47:42	0.093	0.089
15-Sep-2015	12:51:42	0.093	0.295
15-Sep-2015	12:55:42	0.698	0.296
15-Sep-2015	12:59:42	0.098	0.270
15-Sep-2015	13:03:42	0.014	0.050
15-Sep-2015	13:07:42	0.039	0.030
15-Sep-2015	13:11:42	0.038	0.055
15-Sep-2015	13:15:42	0.087	0.042
15-Sep-2015	13:19:42	0.001	0.031
15-Sep-2015	13:23:42	0.004	0.009
15-Sep-2015	13:27:42	0.023	0.013
15-Sep-2015	13:31:42	0.011	0.025
15-Sep-2015	13:35:42	0.041	0.019
15-Sep-2015	13:39:42	0.005	0.044
15-Sep-2015	13:43:42	0.087	0.040
15-Sep-2015	13:47:42	0.029	0.047
15-Sep-2015	13:51:42	0.024	0.050
15-Sep-2015	13:55:42	0.096	0.071
15-Sep-2015	13:59:42	0.093	0.095
15-Sep-2015	14:03:42	0.095	0.093
15-Sep-2015	14:07:42	0.091	0.067
15-Sep-2015	14:11:42	0.016	0.045
15-Sep-2015	14:15:42	0.029	0.015
15-Sep-2015	14:19:42	0.001	0.010
15-Sep-2015	14:23:42	0.001	0.001
15-Sep-2015	14:27:42	0.001	0.004
15-Sep-2015	14:31:42	0.009	0.005
15-Sep-2015	14:35:42	0.006	0.011
15-Sep-2015	14:39:42	0.017	0.019
15-Sep-2015	14:43:42	0.034	0.019

DUST MONITORING

September 2015

shading indicates values over the threshold

Monitor: 2

Threshold: 0.15 (mg/m^3)

Date	Time	Value (mg/m^3)	TWA (mg/m^3)
15-Sep-2015	14:47:42	0.005	0.016
15-Sep-2015	14:51:42	0.009	0.007
15-Sep-2015	14:55:42	0.007	0.006
15-Sep-2015	14:59:42	0.003	0.005
15-Sep-2015	15:03:42	0.006	0.008
15-Sep-2015	15:07:42	0.014	0.010
15-Sep-2015	15:11:42	0.011	0.012
15-Sep-2015	15:15:42	0.011	0.010
15-Sep-2015	15:19:42	0.008	0.016
15-Sep-2015	15:23:42	0.029	0.037
15-Sep-2015	15:27:42	0.073	0.051
16-Sep-2015	10:41:51	0.055	0.052
16-Sep-2015	10:45:51	0.048	0.050
16-Sep-2015	10:49:51	0.047	0.048
16-Sep-2015	10:53:51	0.050	0.061
16-Sep-2015	10:57:51	0.086	0.061
16-Sep-2015	11:01:51	0.048	0.073
16-Sep-2015	11:05:51	0.086	0.066
16-Sep-2015	11:09:51	0.065	0.068
16-Sep-2015	11:13:51	0.054	0.045
16-Sep-2015	11:17:51	0.016	0.040
16-Sep-2015	11:21:51	0.049	0.037
16-Sep-2015	11:25:51	0.045	0.047
22-Sep-2015	08:50:45	0.004	0.002
22-Sep-2015	08:54:45	0.000	0.004
22-Sep-2015	08:58:45	0.009	0.003
22-Sep-2015	09:02:45	0.000	0.003
22-Sep-2015	09:06:45	0.000	0.000
22-Sep-2015	09:10:45	0.000	0.000
22-Sep-2015	09:14:45	0.000	0.000
22-Sep-2015	09:18:45	0.000	0.000
22-Sep-2015	09:22:45	0.000	0.000
22-Sep-2015	09:26:45	0.000	0.000
22-Sep-2015	09:30:45	0.000	0.000
22-Sep-2015	09:34:45	0.000	0.000
22-Sep-2015	09:38:45	0.000	0.000
22-Sep-2015	09:42:45	0.000	0.000
22-Sep-2015	09:46:45	0.000	0.000
22-Sep-2015	09:50:45	0.000	0.000
22-Sep-2015	09:54:45	0.000	0.000
22-Sep-2015	09:58:45	0.000	0.000

DUST MONITORING

September 2015

shading indicates values over the threshold

Monitor: 2

Threshold: 0.15 (mg/m^3)

Date	Time	Value (mg/m^3)	TWA (mg/m^3)
22-Sep-2015	10:02:45	0.000	0.000
22-Sep-2015	10:06:45	0.000	0.000
22-Sep-2015	10:10:45	0.000	0.000
22-Sep-2015	10:14:45	0.000	0.000
22-Sep-2015	10:18:45	0.000	0.000
22-Sep-2015	10:22:45	0.001	0.001
22-Sep-2015	10:26:45	0.002	0.001
22-Sep-2015	10:30:45	0.001	0.002
22-Sep-2015	10:34:45	0.004	0.002
22-Sep-2015	10:38:45	0.001	0.002
22-Sep-2015	10:42:45	0.001	0.001
22-Sep-2015	10:46:45	0.000	0.001
22-Sep-2015	10:50:45	0.003	0.001
22-Sep-2015	10:54:45	0.000	0.001
22-Sep-2015	10:58:45	0.000	0.000
22-Sep-2015	11:02:45	0.000	0.000
22-Sep-2015	11:06:45	0.000	0.000
22-Sep-2015	11:10:45	0.000	0.000
22-Sep-2015	11:14:45	0.000	0.001
22-Sep-2015	11:18:45	0.003	0.001
22-Sep-2015	11:22:45	0.000	0.001
22-Sep-2015	11:26:45	0.000	0.000
22-Sep-2015	11:30:45	0.000	0.000
22-Sep-2015	11:34:45	0.000	0.000
22-Sep-2015	11:38:45	0.000	0.000
22-Sep-2015	11:42:45	0.001	0.000
22-Sep-2015	11:46:45	0.000	0.000
22-Sep-2015	11:50:45	0.000	0.000
22-Sep-2015	11:54:45	0.000	0.013
22-Sep-2015	11:58:45	0.038	0.013
22-Sep-2015	12:02:45	0.001	0.013
22-Sep-2015	12:06:45	0.001	0.001
22-Sep-2015	12:10:45	0.000	0.000
22-Sep-2015	12:14:45	0.000	0.000
22-Sep-2015	12:18:45	0.000	0.000
22-Sep-2015	12:22:45	0.000	0.000
22-Sep-2015	12:26:45	0.000	0.000
22-Sep-2015	12:30:45	0.000	0.000
22-Sep-2015	12:34:45	0.000	0.000
22-Sep-2015	12:38:45	0.000	0.000
22-Sep-2015	12:42:45	0.000	0.000

DUST MONITORING

September 2015

shading indicates values over the threshold

Monitor: 2

Threshold: 0.15 (mg/m^3)

Date	Time	Value (mg/m^3)	TWA (mg/m^3)
22-Sep-2015	12:46:45	0.000	0.000
22-Sep-2015	12:50:45	0.000	0.000
22-Sep-2015	12:54:45	0.000	0.000
22-Sep-2015	12:58:45	0.000	0.000
22-Sep-2015	13:02:45	0.000	0.000
22-Sep-2015	13:06:45	0.000	0.000
22-Sep-2015	13:10:45	0.000	0.000
22-Sep-2015	13:14:45	0.000	0.000
22-Sep-2015	13:18:45	0.000	0.000
22-Sep-2015	13:22:45	0.001	0.000
22-Sep-2015	13:26:45	0.000	0.000
22-Sep-2015	13:30:45	0.000	0.000
22-Sep-2015	13:34:45	0.000	0.000
22-Sep-2015	13:38:45	0.001	0.000
22-Sep-2015	13:42:45	0.000	0.000
22-Sep-2015	13:46:45	0.000	0.000
22-Sep-2015	13:50:45	0.000	0.000
22-Sep-2015	13:54:45	0.001	0.000
22-Sep-2015	13:58:45	0.000	0.001
22-Sep-2015	14:02:45	0.002	0.005
22-Sep-2015	14:06:45	0.012	0.005
22-Sep-2015	14:10:45	0.001	0.005
22-Sep-2015	14:14:45	0.002	0.001
22-Sep-2015	14:18:45	0.000	0.001
22-Sep-2015	14:22:45	0.000	0.000
22-Sep-2015	14:26:45	0.000	0.000
22-Sep-2015	14:30:45	0.000	0.000
22-Sep-2015	14:34:45	0.000	0.000
22-Sep-2015	14:38:45	0.000	0.000
22-Sep-2015	14:42:45	0.000	0.000
22-Sep-2015	14:46:45	0.000	0.000
22-Sep-2015	14:50:45	0.000	0.000
22-Sep-2015	14:54:45	0.000	0.000
22-Sep-2015	14:58:45	0.000	0.000
22-Sep-2015	15:02:45	0.001	0.001
23-Sep-2015	08:32:18	0.000	0.000
23-Sep-2015	08:36:18	0.000	0.000
23-Sep-2015	08:40:18	0.000	0.000
23-Sep-2015	08:44:18	0.000	0.000
23-Sep-2015	08:48:18	0.000	0.000
23-Sep-2015	08:52:18	0.000	0.000

DUST MONITORING

September 2015

shading indicates values over the threshold

Monitor: 2

Threshold: 0.15 (mg/m^3)

Date	Time	Value (mg/m^3)	TWA (mg/m^3)
23-Sep-2015	08:56:18	0.000	0.000
23-Sep-2015	09:00:18	0.000	0.000
23-Sep-2015	09:04:18	0.000	0.000
23-Sep-2015	09:08:18	0.000	0.000
23-Sep-2015	09:12:18	0.000	0.000
23-Sep-2015	09:16:18	0.000	0.001
23-Sep-2015	09:20:18	0.004	0.001
23-Sep-2015	09:24:18	0.000	0.001
23-Sep-2015	09:28:18	0.000	0.000
23-Sep-2015	09:32:18	0.000	0.000
23-Sep-2015	09:36:18	0.000	0.001
23-Sep-2015	09:40:18	0.002	0.001
23-Sep-2015	09:44:18	0.000	0.001
23-Sep-2015	09:48:18	0.000	0.000
23-Sep-2015	09:52:18	0.000	0.000
23-Sep-2015	09:56:18	0.000	0.000
23-Sep-2015	10:00:18	0.000	0.000
23-Sep-2015	10:04:18	0.000	0.000
23-Sep-2015	10:08:18	0.000	0.000
23-Sep-2015	10:12:18	0.000	0.000
23-Sep-2015	10:16:18	0.000	0.000
23-Sep-2015	10:20:18	0.000	0.000
23-Sep-2015	10:24:18	0.001	0.000
23-Sep-2015	10:28:18	0.000	0.000
23-Sep-2015	10:32:18	0.000	0.044
23-Sep-2015	10:36:18	0.132	0.044
23-Sep-2015	10:40:18	0.000	0.044
23-Sep-2015	10:44:18	0.000	0.000
23-Sep-2015	10:48:18	0.000	0.000
23-Sep-2015	10:52:18	0.000	0.000
23-Sep-2015	10:56:18	0.000	0.000
23-Sep-2015	11:00:18	0.000	0.000
23-Sep-2015	11:04:18	0.000	0.000
23-Sep-2015	11:08:18	0.000	0.000
23-Sep-2015	11:12:18	0.000	0.000
23-Sep-2015	11:16:18	0.000	0.000
23-Sep-2015	11:20:18	0.000	0.000
23-Sep-2015	11:24:18	0.000	0.000
24-Sep-2015	08:16:03	0.000	0.000
24-Sep-2015	08:20:03	0.000	0.000
24-Sep-2015	08:24:03	0.000	0.000

DUST MONITORING

September 2015

shading indicates values over the threshold

Monitor: 2

Threshold: 0.15 (mg/m^3)

Date	Time	Value (mg/m^3)	TWA (mg/m^3)
24-Sep-2015	08:28:03	0.000	0.048
24-Sep-2015	08:32:03	0.145	0.048
24-Sep-2015	08:36:03	0.000	0.048
24-Sep-2015	08:40:03	0.000	0.000
24-Sep-2015	08:44:03	0.000	0.000
24-Sep-2015	08:48:03	0.000	0.000
24-Sep-2015	08:52:03	0.000	0.000
24-Sep-2015	08:56:03	0.000	0.000
24-Sep-2015	09:00:03	0.000	0.000
24-Sep-2015	09:04:03	0.000	0.000
24-Sep-2015	09:08:03	0.000	0.000
24-Sep-2015	09:12:03	0.000	0.000
24-Sep-2015	09:16:03	0.000	0.000
24-Sep-2015	09:20:03	0.000	0.003
24-Sep-2015	09:24:03	0.009	0.003
24-Sep-2015	09:28:03	0.000	0.003
24-Sep-2015	09:32:03	0.000	0.000
24-Sep-2015	09:36:03	0.000	0.000
24-Sep-2015	09:40:03	0.000	0.000
24-Sep-2015	09:44:03	0.000	0.000
24-Sep-2015	09:48:03	0.000	0.000
24-Sep-2015	09:52:03	0.000	0.000
24-Sep-2015	09:56:03	0.000	0.000
24-Sep-2015	10:00:03	0.000	0.000
24-Sep-2015	10:04:03	0.000	0.000
24-Sep-2015	10:08:03	0.000	0.000
24-Sep-2015	10:12:03	0.000	0.000
24-Sep-2015	10:16:03	0.000	0.000
24-Sep-2015	10:20:03	0.000	0.000
24-Sep-2015	10:24:03	0.000	0.000
24-Sep-2015	10:28:03	0.000	0.000
24-Sep-2015	10:32:03	0.000	0.000
24-Sep-2015	10:36:03	0.000	0.000
24-Sep-2015	10:40:03	0.000	0.000
24-Sep-2015	10:44:03	0.000	0.000
24-Sep-2015	10:48:03	0.000	0.000
24-Sep-2015	10:52:03	0.000	0.000
24-Sep-2015	10:56:03	0.000	0.000
24-Sep-2015	11:00:03	0.000	0.012
24-Sep-2015	11:04:03	0.036	0.012
24-Sep-2015	11:08:03	0.000	0.012

DUST MONITORING

September 2015

shading indicates values over the threshold

Monitor: 2

Threshold: 0.15 (mg/m^3)

Date	Time	Value (mg/m^3)	TWA (mg/m^3)
24-Sep-2015	11:12:03	0.000	0.000
24-Sep-2015	11:16:03	0.000	0.000
24-Sep-2015	11:20:03	0.000	0.000
24-Sep-2015	11:24:03	0.000	0.000
24-Sep-2015	11:28:03	0.000	0.000
24-Sep-2015	11:32:03	0.000	0.000
24-Sep-2015	11:36:03	0.000	0.000
24-Sep-2015	11:40:03	0.000	0.000
24-Sep-2015	11:44:03	0.000	0.000
24-Sep-2015	11:48:03	0.000	0.001
24-Sep-2015	11:52:03	0.004	0.010
24-Sep-2015	11:56:03	0.027	0.025
24-Sep-2015	12:00:03	0.045	0.024
24-Sep-2015	12:04:03	0.000	0.015
24-Sep-2015	12:08:03	0.000	0.000
24-Sep-2015	12:12:03	0.000	0.003
24-Sep-2015	12:16:03	0.009	0.006
24-Sep-2015	12:20:03	0.008	0.006
24-Sep-2015	12:24:03	0.000	0.003
24-Sep-2015	12:28:03	0.000	0.000
24-Sep-2015	12:32:03	0.000	0.034
24-Sep-2015	12:36:03	0.102	0.048
24-Sep-2015	12:40:03	0.043	0.051
24-Sep-2015	12:44:03	0.008	0.017
24-Sep-2015	12:48:03	0.000	0.003
24-Sep-2015	12:52:03	0.000	0.000
24-Sep-2015	12:56:03	0.000	0.000
24-Sep-2015	13:00:03	0.001	0.000
24-Sep-2015	13:04:03	0.000	0.000
24-Sep-2015	13:08:03	0.000	0.000
24-Sep-2015	13:12:03	0.000	0.000
24-Sep-2015	13:16:03	0.000	0.000
24-Sep-2015	13:20:03	0.000	0.000
24-Sep-2015	13:24:03	0.000	0.000
24-Sep-2015	13:28:03	0.000	0.000
24-Sep-2015	13:32:03	0.000	0.000
24-Sep-2015	13:36:03	0.000	0.000
24-Sep-2015	13:40:03	0.000	0.009
24-Sep-2015	13:44:03	0.028	0.012
24-Sep-2015	13:48:03	0.007	0.012
24-Sep-2015	13:52:03	0.000	0.002

DUST MONITORING

September 2015

shading indicates values over the threshold

Monitor: 2

Threshold: 0.15 (mg/m^3)

Date	Time	Value (mg/m^3)	TWA (mg/m^3)
24-Sep-2015	13:56:03	0.000	0.000
24-Sep-2015	14:00:03	0.000	0.000
24-Sep-2015	14:04:03	0.000	0.000
24-Sep-2015	14:08:03	0.000	0.000
24-Sep-2015	14:12:03	0.000	0.000
24-Sep-2015	14:16:03	0.000	0.000
24-Sep-2015	14:20:03	0.000	0.000
24-Sep-2015	14:24:03	0.000	0.000
24-Sep-2015	14:28:03	0.001	0.001
24-Sep-2015	14:32:03	0.002	0.001
24-Sep-2015	14:36:03	0.000	0.001
24-Sep-2015	14:40:03	0.000	0.000
24-Sep-2015	14:44:03	0.000	0.000
24-Sep-2015	14:48:03	0.000	0.000
24-Sep-2015	14:52:03	0.000	0.000
24-Sep-2015	14:56:03	0.000	0.000
24-Sep-2015	15:00:03	0.001	0.004
24-Sep-2015	15:04:03	0.012	0.004
24-Sep-2015	15:08:03	0.000	0.004
24-Sep-2015	15:12:03	0.000	0.000
24-Sep-2015	15:16:03	0.000	0.000
30-Sep-2015	07:27:52	0.000	0.000
30-Sep-2015	07:31:52	0.000	0.000
30-Sep-2015	07:35:52	0.000	0.000
30-Sep-2015	07:39:52	0.000	0.000
30-Sep-2015	07:43:52	0.000	0.000
30-Sep-2015	07:47:52	0.000	0.001
30-Sep-2015	07:51:52	0.003	0.001
30-Sep-2015	07:55:52	0.000	0.001
30-Sep-2015	07:59:52	0.000	0.000
30-Sep-2015	08:03:52	0.000	0.000
30-Sep-2015	08:07:52	0.000	0.000
30-Sep-2015	08:11:52	0.000	0.000
30-Sep-2015	08:15:52	0.000	0.000
30-Sep-2015	08:19:52	0.000	0.000
30-Sep-2015	08:23:52	0.000	0.000
30-Sep-2015	08:27:52	0.001	0.000
30-Sep-2015	08:31:52	0.000	0.000
30-Sep-2015	08:35:52	0.000	0.000
30-Sep-2015	08:39:52	0.001	0.000
30-Sep-2015	08:43:52	0.000	0.000

DUST MONITORING

September 2015

shading indicates values over the threshold

Monitor: 2

Threshold: 0.15 (mg/m^3)

Date	Time	Value (mg/m^3)	TWA (mg/m^3)
30-Sep-2015	08:47:52	0.000	0.000
30-Sep-2015	08:51:52	0.001	0.000
30-Sep-2015	08:55:52	0.000	0.001
30-Sep-2015	08:59:52	0.001	0.000
30-Sep-2015	09:03:52	0.000	0.000
30-Sep-2015	09:07:52	0.000	0.007
30-Sep-2015	09:11:52	0.020	0.007
30-Sep-2015	09:15:52	0.000	0.007
30-Sep-2015	09:19:52	0.001	0.000
30-Sep-2015	09:23:52	0.000	0.001
30-Sep-2015	09:27:52	0.001	0.000
30-Sep-2015	09:31:52	0.000	0.001
30-Sep-2015	09:35:52	0.002	0.001
30-Sep-2015	09:39:52	0.000	0.015
30-Sep-2015	09:43:52	0.044	0.015
30-Sep-2015	09:47:52	0.000	0.015
30-Sep-2015	09:51:52	0.000	0.000
30-Sep-2015	09:55:52	0.001	0.000
30-Sep-2015	09:59:52	0.000	0.000
30-Sep-2015	10:03:52	0.000	0.000
30-Sep-2015	10:07:52	0.000	0.000
30-Sep-2015	10:11:52	0.000	0.000
30-Sep-2015	10:15:52	0.000	0.000
30-Sep-2015	10:19:52	0.000	0.000
30-Sep-2015	10:23:52	0.000	0.001
30-Sep-2015	10:27:52	0.002	0.001
30-Sep-2015	10:31:52	0.000	0.001
30-Sep-2015	10:35:52	0.000	0.000
30-Sep-2015	10:39:52	0.000	0.000
30-Sep-2015	10:43:52	0.000	0.000
30-Sep-2015	10:47:52	0.000	0.000
30-Sep-2015	10:51:52	0.000	0.000
30-Sep-2015	10:55:52	0.000	0.000
30-Sep-2015	10:59:52	0.000	0.000
30-Sep-2015	11:03:52	0.000	0.009
30-Sep-2015	11:07:52	0.026	0.009
30-Sep-2015	11:11:52	0.000	0.020
30-Sep-2015	11:15:52	0.033	0.014
30-Sep-2015	11:19:52	0.008	0.014
30-Sep-2015	11:23:52	0.000	0.003
30-Sep-2015	11:27:52	0.000	0.000

DUST MONITORING

September 2015

shading indicates values over the threshold

Monitor: 2

Threshold: 0.15 (mg/m^3)

Date	Time	Value (mg/m^3)	TWA (mg/m^3)
30-Sep-2015	11:31:52	0.000	0.000
30-Sep-2015	11:35:52	0.000	0.000
30-Sep-2015	11:39:52	0.000	0.000
30-Sep-2015	11:43:52	0.000	0.000
30-Sep-2015	11:47:52	0.000	0.002
30-Sep-2015	11:51:52	0.005	0.002
30-Sep-2015	11:55:52	0.000	0.003
30-Sep-2015	11:59:52	0.003	0.006
30-Sep-2015	12:03:52	0.015	0.006
30-Sep-2015	12:07:52	0.000	0.005
30-Sep-2015	12:11:52	0.000	0.000
30-Sep-2015	12:15:52	0.000	0.000
30-Sep-2015	12:19:52	0.000	0.000
30-Sep-2015	12:23:52	0.000	0.006
30-Sep-2015	12:27:52	0.017	0.006
30-Sep-2015	12:31:52	0.000	0.006
30-Sep-2015	12:35:52	0.000	0.000
30-Sep-2015	12:39:52	0.000	0.001
30-Sep-2015	12:43:52	0.002	0.001
30-Sep-2015	12:47:52	0.000	0.014
30-Sep-2015	12:51:52	0.039	0.014
30-Sep-2015	12:55:52	0.004	0.014
30-Sep-2015	12:59:52	0.000	0.001
30-Sep-2015	13:03:52	0.000	0.000
30-Sep-2015	13:07:52	0.000	0.013
30-Sep-2015	13:11:52	0.038	0.013
30-Sep-2015	13:15:52	0.000	0.013
30-Sep-2015	13:19:52	0.000	0.001
30-Sep-2015	13:23:52	0.002	0.001
30-Sep-2015	13:27:52	0.000	0.001
30-Sep-2015	13:31:52	0.000	0.000
30-Sep-2015	13:35:52	0.000	0.071
30-Sep-2015	13:39:52	0.214	0.071
30-Sep-2015	13:43:52	0.000	0.071
30-Sep-2015	13:47:52	0.000	0.014
30-Sep-2015	13:51:52	0.041	0.017
30-Sep-2015	13:55:52	0.009	0.017
30-Sep-2015	13:59:52	0.000	0.003
30-Sep-2015	14:03:52	0.001	0.000
30-Sep-2015	14:07:52	0.000	0.003
30-Sep-2015	14:11:52	0.009	0.003

DUST MONITORING

September 2015

shading indicates values over the threshold

Monitor: **2**

Threshold: **0.15 (mg/m^3)**

Date	Time	Value (mg/m^3)	TWA (mg/m^3)
30-Sep-2015	14:15:52	0.000	0.003
30-Sep-2015	14:19:52	0.000	0.000
30-Sep-2015	14:23:52	0.000	0.000
30-Sep-2015	14:27:52	0.000	0.006
30-Sep-2015	14:31:52	0.019	0.006
30-Sep-2015	14:35:52	0.000	0.006
30-Sep-2015	14:39:52	0.000	0.000
30-Sep-2015	14:43:52	0.000	0.000
30-Sep-2015	14:47:52	0.000	0.000
30-Sep-2015	14:51:52	0.000	0.000
30-Sep-2015	14:55:52	0.000	0.000
30-Sep-2015	14:59:52	0.000	0.000
30-Sep-2015	15:03:52	0.000	0.000
30-Sep-2015	15:07:52	0.000	0.008
30-Sep-2015	15:11:52	0.025	0.013

DUST MONITORING

September 2015

shading indicates values over the threshold

Monitor: 3

Threshold: 0.15 (mg/m^3)

Date	Time	Value (mg/m^3)	TWA (mg/m^3)
1-Sep-2015	07:04:21	0.000	0.001
1-Sep-2015	07:08:21	0.001	0.000
1-Sep-2015	07:12:21	0.000	0.001
1-Sep-2015	07:16:21	0.002	0.001
1-Sep-2015	07:20:21	0.000	0.001
1-Sep-2015	07:24:21	0.000	0.000
1-Sep-2015	07:28:21	0.001	0.000
1-Sep-2015	07:32:21	0.000	0.000
1-Sep-2015	07:36:21	0.000	0.000
1-Sep-2015	07:40:21	0.000	0.000
1-Sep-2015	07:44:21	0.000	0.000
1-Sep-2015	07:48:21	0.001	0.001
1-Sep-2015	07:52:21	0.002	0.001
1-Sep-2015	07:56:21	0.001	0.002
1-Sep-2015	08:00:21	0.004	0.002
1-Sep-2015	08:04:21	0.001	0.003
1-Sep-2015	08:08:21	0.005	0.002
1-Sep-2015	08:12:21	0.001	0.002
1-Sep-2015	08:16:21	0.000	0.000
1-Sep-2015	08:20:21	0.000	0.000
1-Sep-2015	08:24:21	0.000	0.000
1-Sep-2015	08:28:21	0.000	0.000
1-Sep-2015	08:32:21	0.000	0.000
1-Sep-2015	08:36:21	0.000	0.000
1-Sep-2015	08:40:21	0.000	0.000
1-Sep-2015	08:44:21	0.000	0.000
1-Sep-2015	08:48:21	0.000	0.000
1-Sep-2015	08:52:21	0.000	0.001
1-Sep-2015	08:56:21	0.003	0.004
1-Sep-2015	09:00:21	0.010	0.006
1-Sep-2015	09:04:21	0.004	0.005
1-Sep-2015	09:08:21	0.000	0.001
1-Sep-2015	09:12:21	0.000	0.000
1-Sep-2015	09:16:21	0.000	0.000
1-Sep-2015	09:20:21	0.000	0.000
1-Sep-2015	09:24:21	0.000	0.002
1-Sep-2015	09:28:21	0.006	0.002
1-Sep-2015	09:32:21	0.000	0.002
1-Sep-2015	09:36:21	0.000	0.002
1-Sep-2015	09:40:21	0.006	0.007
1-Sep-2015	09:44:21	0.015	0.007

DUST MONITORING

September 2015

shading indicates values over the threshold

Monitor: 3

Threshold: 0.15 (mg/m^3)

Date	Time	Value (mg/m^3)	TWA (mg/m^3)
1-Sep-2015	09:48:21	0.000	0.005
1-Sep-2015	09:52:21	0.001	0.000
1-Sep-2015	09:56:21	0.000	0.000
1-Sep-2015	10:00:21	0.000	0.000
1-Sep-2015	10:04:21	0.000	0.000
1-Sep-2015	10:08:21	0.000	0.000
1-Sep-2015	10:12:21	0.000	0.000
1-Sep-2015	10:16:21	0.000	0.000
1-Sep-2015	10:20:21	0.000	0.000
1-Sep-2015	10:24:21	0.000	0.000
1-Sep-2015	10:28:21	0.000	0.000
1-Sep-2015	10:32:21	0.000	0.000
1-Sep-2015	10:36:21	0.000	0.000
1-Sep-2015	10:40:21	0.000	0.000
1-Sep-2015	10:44:21	0.000	0.000
1-Sep-2015	10:48:21	0.000	0.000
1-Sep-2015	10:52:21	0.000	0.000
1-Sep-2015	10:56:21	0.000	0.000
1-Sep-2015	11:00:21	0.000	0.000
1-Sep-2015	11:04:21	0.000	0.000
1-Sep-2015	11:08:21	0.000	0.000
1-Sep-2015	11:12:21	0.000	0.000
1-Sep-2015	11:16:21	0.000	0.000
1-Sep-2015	11:20:21	0.000	0.000
1-Sep-2015	11:24:21	0.000	0.000
1-Sep-2015	11:28:21	0.000	0.000
1-Sep-2015	11:32:21	0.000	0.000
1-Sep-2015	11:36:21	0.000	0.000
1-Sep-2015	11:40:21	0.000	0.000
1-Sep-2015	11:44:21	0.000	0.000
1-Sep-2015	11:48:21	0.000	0.006
1-Sep-2015	11:52:21	0.017	0.012
1-Sep-2015	11:56:21	0.018	0.012
1-Sep-2015	12:00:21	0.000	0.006
1-Sep-2015	12:04:21	0.000	0.000
1-Sep-2015	12:08:21	0.000	0.000
1-Sep-2015	12:12:21	0.000	0.000
1-Sep-2015	12:16:21	0.000	0.000
1-Sep-2015	12:20:21	0.000	0.000
1-Sep-2015	12:24:21	0.000	0.000
1-Sep-2015	12:28:21	0.000	0.000

DUST MONITORING

September 2015

shading indicates values over the threshold

Monitor: 3

Threshold: 0.15 (mg/m^3)

Date	Time	Value (mg/m^3)	TWA (mg/m^3)
1-Sep-2015	12:32:21	0.000	0.000
1-Sep-2015	12:36:21	0.000	0.000
1-Sep-2015	12:40:21	0.000	0.000
1-Sep-2015	12:44:21	0.000	0.000
1-Sep-2015	12:48:21	0.000	0.000
1-Sep-2015	12:52:21	0.000	0.000
1-Sep-2015	12:56:21	0.000	0.000
1-Sep-2015	13:00:21	0.000	0.000
1-Sep-2015	13:04:21	0.000	0.000
1-Sep-2015	13:08:21	0.000	0.000
1-Sep-2015	13:12:21	0.000	0.000
1-Sep-2015	13:16:21	0.000	0.000
1-Sep-2015	13:20:21	0.000	0.000
1-Sep-2015	13:24:21	0.000	0.000
1-Sep-2015	13:28:21	0.000	0.001
1-Sep-2015	13:32:21	0.002	0.002
1-Sep-2015	13:36:21	0.004	0.002
1-Sep-2015	13:40:21	0.000	0.001
1-Sep-2015	13:44:21	0.000	0.000
1-Sep-2015	13:48:21	0.000	0.000
1-Sep-2015	13:52:21	0.000	0.000
1-Sep-2015	13:56:21	0.000	0.000
1-Sep-2015	14:00:21	0.001	0.000
1-Sep-2015	14:04:21	0.000	0.000
1-Sep-2015	14:08:21	0.000	0.000
1-Sep-2015	14:12:21	0.000	0.000
1-Sep-2015	14:16:21	0.000	0.000
1-Sep-2015	14:20:21	0.000	0.000
1-Sep-2015	14:24:21	0.000	0.000
1-Sep-2015	14:28:21	0.000	0.000
1-Sep-2015	14:32:21	0.000	0.000
1-Sep-2015	14:36:21	0.000	0.002
1-Sep-2015	14:40:21	0.006	0.002
1-Sep-2015	14:44:21	0.000	0.015
1-Sep-2015	14:48:21	0.038	0.013
1-Sep-2015	14:52:21	0.000	0.013
1-Sep-2015	14:56:21	0.000	0.000
1-Sep-2015	15:00:21	0.000	0.000
1-Sep-2015	15:04:21	0.000	0.000
1-Sep-2015	15:08:21	0.000	0.000
1-Sep-2015	15:12:21	0.000	0.000

DUST MONITORING

September 2015

shading indicates values over the threshold

Monitor: 3

Threshold: 0.15 (mg/m^3)

Date	Time	Value (mg/m^3)	TWA (mg/m^3)
1-Sep-2015	15:16:21	0.001	0.001
1-Sep-2015	15:20:21	0.003	0.001
1-Sep-2015	15:24:21	0.000	0.001
1-Sep-2015	15:28:21	0.000	0.000
1-Sep-2015	15:32:21	0.000	0.000
1-Sep-2015	15:36:21	0.000	0.000
1-Sep-2015	15:40:21	0.000	0.000
2-Sep-2015	10:17:05	0.003	0.004
2-Sep-2015	10:21:05	0.005	0.003
2-Sep-2015	10:25:05	0.000	0.002
2-Sep-2015	10:29:05	0.000	0.001
2-Sep-2015	10:33:05	0.002	0.002
2-Sep-2015	10:37:05	0.004	0.002
2-Sep-2015	10:41:05	0.000	0.001
2-Sep-2015	10:45:05	0.000	0.001
2-Sep-2015	10:49:05	0.004	0.003
2-Sep-2015	10:53:05	0.004	0.005
2-Sep-2015	10:57:05	0.007	0.005
2-Sep-2015	11:01:05	0.004	0.004
2-Sep-2015	11:05:05	0.002	0.002
2-Sep-2015	11:09:05	0.001	0.001
2-Sep-2015	11:13:05	0.001	0.001
2-Sep-2015	11:17:05	0.002	0.001
2-Sep-2015	11:21:05	0.000	0.001
2-Sep-2015	11:25:05	0.000	0.000
2-Sep-2015	11:29:05	0.000	0.000
2-Sep-2015	11:33:05	0.000	0.000
2-Sep-2015	11:37:05	0.000	0.000
2-Sep-2015	11:41:05	0.001	0.000
2-Sep-2015	11:45:05	0.000	0.000
2-Sep-2015	11:49:05	0.000	0.000
2-Sep-2015	11:53:05	0.000	0.000
2-Sep-2015	11:57:05	0.000	0.000
2-Sep-2015	12:01:05	0.000	0.000
2-Sep-2015	12:05:05	0.000	0.000
2-Sep-2015	12:09:05	0.000	0.000
2-Sep-2015	12:13:05	0.000	0.000
2-Sep-2015	12:17:05	0.000	0.000
2-Sep-2015	12:21:05	0.000	0.000
2-Sep-2015	12:25:05	0.000	0.000
2-Sep-2015	12:29:05	0.000	0.000

DUST MONITORING

September 2015

shading indicates values over the threshold

Monitor: 3

Threshold: 0.15 (mg/m^3)

Date	Time	Value (mg/m^3)	TWA (mg/m^3)
2-Sep-2015	12:33:05	0.000	0.000
2-Sep-2015	12:37:05	0.001	0.000
2-Sep-2015	12:41:05	0.000	0.000
2-Sep-2015	12:45:05	0.000	0.000
2-Sep-2015	12:49:05	0.000	0.000
2-Sep-2015	12:53:05	0.000	0.000
2-Sep-2015	12:57:05	0.000	0.000
2-Sep-2015	13:01:05	0.000	0.000
2-Sep-2015	13:05:05	0.000	0.000
2-Sep-2015	13:09:05	0.000	0.000
2-Sep-2015	13:13:05	0.000	0.000
2-Sep-2015	13:17:05	0.000	0.000
2-Sep-2015	13:21:05	0.000	0.000
2-Sep-2015	13:25:05	0.000	0.000
2-Sep-2015	13:29:05	0.000	0.000
2-Sep-2015	13:33:05	0.000	0.000
2-Sep-2015	13:37:05	0.000	0.000
2-Sep-2015	13:41:05	0.000	0.000
2-Sep-2015	13:45:05	0.000	0.000
2-Sep-2015	13:49:05	0.000	0.000
2-Sep-2015	13:53:05	0.000	0.000
2-Sep-2015	13:57:05	0.000	0.000
2-Sep-2015	14:01:05	0.000	0.001
2-Sep-2015	14:05:05	0.002	0.001
2-Sep-2015	14:09:05	0.000	0.001
2-Sep-2015	14:13:05	0.000	0.000
2-Sep-2015	14:17:05	0.000	0.000
2-Sep-2015	14:21:05	0.001	0.000
2-Sep-2015	14:25:05	0.000	0.006
2-Sep-2015	14:29:05	0.018	0.007
2-Sep-2015	14:33:05	0.003	0.007
2-Sep-2015	14:37:05	0.000	0.001
2-Sep-2015	14:41:05	0.000	0.000
2-Sep-2015	14:45:05	0.000	0.000
2-Sep-2015	14:49:05	0.000	0.000
2-Sep-2015	14:53:05	0.000	0.000
2-Sep-2015	14:57:05	0.000	0.000
2-Sep-2015	15:01:05	0.000	0.000
2-Sep-2015	15:05:05	0.000	0.000
2-Sep-2015	15:09:05	0.000	0.000
2-Sep-2015	15:13:05	0.000	0.000

DUST MONITORING

September 2015

shading indicates values over the threshold

Monitor: 3

Threshold: 0.15 (mg/m^3)

Date	Time	Value (mg/m^3)	TWA (mg/m^3)
2-Sep-2015	15:17:05	0.000	0.000
2-Sep-2015	15:21:05	0.000	0.000
2-Sep-2015	15:25:05	0.000	0.000
2-Sep-2015	15:29:05	0.000	0.000
2-Sep-2015	15:33:05	0.000	0.000
2-Sep-2015	15:37:05	0.000	0.000
2-Sep-2015	15:41:05	0.000	0.000
4-Sep-2015	07:32:13	0.040	0.024
4-Sep-2015	07:36:13	0.008	0.018
4-Sep-2015	07:40:13	0.006	0.007
4-Sep-2015	07:44:13	0.007	0.006
4-Sep-2015	07:48:13	0.005	0.005
4-Sep-2015	07:52:13	0.004	0.004
4-Sep-2015	07:56:13	0.004	0.004
4-Sep-2015	08:00:13	0.003	0.003
4-Sep-2015	08:04:13	0.002	0.002
4-Sep-2015	08:08:13	0.002	0.002
4-Sep-2015	08:12:13	0.002	0.002
4-Sep-2015	08:16:13	0.003	0.002
4-Sep-2015	08:20:13	0.002	0.002
4-Sep-2015	08:24:13	0.001	0.005
4-Sep-2015	08:28:13	0.011	0.027
4-Sep-2015	08:32:13	0.068	0.030
4-Sep-2015	08:36:13	0.011	0.027
4-Sep-2015	08:40:13	0.001	0.004
4-Sep-2015	08:44:13	0.000	0.002
4-Sep-2015	08:48:13	0.005	0.002
4-Sep-2015	08:52:13	0.001	0.005
4-Sep-2015	08:56:13	0.008	0.004
4-Sep-2015	09:00:13	0.004	0.005
4-Sep-2015	09:04:13	0.002	0.002
4-Sep-2015	09:08:13	0.000	0.001
4-Sep-2015	09:12:13	0.001	0.001
4-Sep-2015	09:16:13	0.001	0.001
4-Sep-2015	09:20:13	0.001	0.001
4-Sep-2015	09:24:13	0.001	0.015
4-Sep-2015	09:28:13	0.043	0.022
4-Sep-2015	09:32:13	0.023	0.022
4-Sep-2015	09:36:13	0.001	0.011
4-Sep-2015	09:40:13	0.008	0.004
4-Sep-2015	09:44:13	0.002	0.020

DUST MONITORING

September 2015

shading indicates values over the threshold

Monitor: 3

Threshold: 0.15 (mg/m^3)

Date	Time	Value (mg/m^3)	TWA (mg/m^3)
4-Sep-2015	09:48:13	0.051	0.024
4-Sep-2015	09:52:13	0.020	0.033
4-Sep-2015	09:56:13	0.027	0.018
4-Sep-2015	10:00:13	0.008	0.014
4-Sep-2015	10:04:13	0.008	0.018
4-Sep-2015	10:08:13	0.038	0.017
4-Sep-2015	10:12:13	0.006	0.023
4-Sep-2015	10:16:13	0.026	0.016
4-Sep-2015	10:20:13	0.015	0.020
4-Sep-2015	10:24:13	0.019	0.015
4-Sep-2015	10:28:13	0.010	0.012
4-Sep-2015	10:32:13	0.006	0.007
4-Sep-2015	10:36:13	0.006	0.006
4-Sep-2015	10:40:13	0.005	0.016
4-Sep-2015	10:44:13	0.038	0.016
4-Sep-2015	10:48:13	0.006	0.017
4-Sep-2015	10:52:13	0.008	0.048
4-Sep-2015	10:56:13	0.129	0.049
4-Sep-2015	11:00:13	0.011	0.051
4-Sep-2015	11:04:13	0.012	0.012
4-Sep-2015	11:08:13	0.013	0.012
4-Sep-2015	11:12:13	0.012	0.013
4-Sep-2015	11:16:13	0.013	0.012
4-Sep-2015	11:20:13	0.011	0.012
4-Sep-2015	11:24:13	0.011	0.011
4-Sep-2015	11:28:13	0.011	0.011
4-Sep-2015	11:32:13	0.010	0.011
4-Sep-2015	11:36:13	0.011	0.010
4-Sep-2015	11:40:13	0.010	0.010
4-Sep-2015	11:44:13	0.010	0.010
4-Sep-2015	11:48:13	0.010	0.010
4-Sep-2015	11:52:13	0.011	0.011
4-Sep-2015	11:56:13	0.011	0.011
4-Sep-2015	12:00:13	0.010	0.011
4-Sep-2015	12:04:13	0.011	0.011
4-Sep-2015	12:08:13	0.012	0.012
4-Sep-2015	12:12:13	0.013	0.013
4-Sep-2015	12:16:13	0.013	0.013
4-Sep-2015	12:20:13	0.012	0.012
4-Sep-2015	12:24:13	0.011	0.011
4-Sep-2015	12:28:13	0.010	0.028

DUST MONITORING

September 2015

shading indicates values over the threshold

Monitor: 3

Threshold: 0.15 (mg/m^3)

Date	Time	Value (mg/m^3)	TWA (mg/m^3)
4-Sep-2015	12:32:13	0.063	0.029
4-Sep-2015	12:36:13	0.013	0.029
4-Sep-2015	12:40:13	0.011	0.011
4-Sep-2015	12:44:13	0.010	0.012
4-Sep-2015	12:48:13	0.014	0.013
4-Sep-2015	12:52:13	0.015	0.014
4-Sep-2015	12:56:13	0.014	0.014
4-Sep-2015	13:00:13	0.012	0.013
4-Sep-2015	13:04:13	0.013	0.013
4-Sep-2015	13:08:13	0.014	0.013
4-Sep-2015	13:12:13	0.012	0.012
4-Sep-2015	13:16:13	0.011	0.011
4-Sep-2015	13:20:13	0.011	0.011
4-Sep-2015	13:24:13	0.010	0.010
4-Sep-2015	13:28:13	0.010	0.013
4-Sep-2015	13:32:13	0.020	0.014
4-Sep-2015	13:36:13	0.012	0.014
4-Sep-2015	13:40:13	0.010	0.010
4-Sep-2015	13:44:13	0.009	0.010
4-Sep-2015	13:48:13	0.010	0.010
4-Sep-2015	13:52:13	0.010	0.009
4-Sep-2015	13:56:13	0.008	0.008
4-Sep-2015	14:00:13	0.007	0.007
4-Sep-2015	14:04:13	0.007	0.007
4-Sep-2015	14:08:13	0.008	0.010
4-Sep-2015	14:12:13	0.014	0.010
4-Sep-2015	14:16:13	0.008	0.009
4-Sep-2015	14:20:13	0.006	0.007
4-Sep-2015	14:24:13	0.006	0.006
4-Sep-2015	14:28:13	0.006	0.006
4-Sep-2015	14:32:13	0.006	0.006
4-Sep-2015	14:36:13	0.006	0.006
4-Sep-2015	14:40:13	0.006	0.006
4-Sep-2015	14:44:13	0.007	0.007
4-Sep-2015	14:48:13	0.008	0.008
4-Sep-2015	14:52:13	0.009	0.009
4-Sep-2015	14:56:13	0.011	0.009
4-Sep-2015	15:00:13	0.006	0.009
8-Sep-2015	09:14:52	0.001	0.001
8-Sep-2015	09:18:52	0.000	0.000
8-Sep-2015	09:22:52	0.000	0.000

DUST MONITORING

September 2015

shading indicates values over the threshold

Monitor: 3

Threshold: 0.15 (mg/m^3)

Date	Time	Value (mg/m^3)	TWA (mg/m^3)
8-Sep-2015	09:26:52	0.000	0.000
8-Sep-2015	09:30:52	0.000	0.000
8-Sep-2015	09:34:52	0.000	0.000
8-Sep-2015	09:38:52	0.000	0.000
8-Sep-2015	09:42:52	0.000	0.000
8-Sep-2015	09:46:52	0.000	0.000
8-Sep-2015	09:50:52	0.000	0.000
8-Sep-2015	09:54:52	0.000	0.000
8-Sep-2015	09:58:52	0.000	0.000
8-Sep-2015	10:02:52	0.000	0.000
8-Sep-2015	10:06:52	0.000	0.000
8-Sep-2015	10:10:52	0.000	0.000
8-Sep-2015	10:14:52	0.000	0.000
8-Sep-2015	10:18:52	0.000	0.000
8-Sep-2015	10:22:52	0.000	0.000
8-Sep-2015	10:26:52	0.000	0.000
8-Sep-2015	10:30:52	0.000	0.000
8-Sep-2015	10:34:52	0.001	0.001
8-Sep-2015	10:38:52	0.001	0.001
8-Sep-2015	10:42:52	0.000	0.000
8-Sep-2015	10:46:52	0.000	0.000
8-Sep-2015	10:50:52	0.000	0.000
8-Sep-2015	10:54:52	0.001	0.001
8-Sep-2015	10:58:52	0.001	0.001
8-Sep-2015	11:02:52	0.001	0.001
8-Sep-2015	11:06:52	0.002	0.002
8-Sep-2015	11:10:52	0.002	0.002
8-Sep-2015	11:14:52	0.002	0.002
8-Sep-2015	11:18:52	0.001	0.001
8-Sep-2015	11:22:52	0.001	0.001
8-Sep-2015	11:26:52	0.001	0.001
8-Sep-2015	11:30:52	0.001	0.001
8-Sep-2015	11:34:52	0.001	0.001
8-Sep-2015	11:38:52	0.001	0.001
8-Sep-2015	11:42:52	0.001	0.001
8-Sep-2015	11:46:52	0.000	0.000
8-Sep-2015	11:50:52	0.000	0.000
8-Sep-2015	11:54:52	0.001	0.000
8-Sep-2015	11:58:52	0.000	0.004
8-Sep-2015	12:02:52	0.012	0.011
8-Sep-2015	12:06:52	0.021	0.011

DUST MONITORING

September 2015

shading indicates values over the threshold

Monitor: 3

Threshold: 0.15 (mg/m^3)

Date	Time	Value (mg/m^3)	TWA (mg/m^3)
8-Sep-2015	12:10:52	0.001	0.009
8-Sep-2015	12:14:52	0.005	0.002
8-Sep-2015	12:18:52	0.000	0.002
8-Sep-2015	12:22:52	0.000	0.001
8-Sep-2015	12:26:52	0.002	0.001
8-Sep-2015	12:30:52	0.001	0.002
8-Sep-2015	12:34:52	0.004	0.002
8-Sep-2015	12:38:52	0.001	0.002
8-Sep-2015	12:42:52	0.001	0.001
8-Sep-2015	12:46:52	0.001	0.001
8-Sep-2015	12:50:52	0.001	0.001
8-Sep-2015	12:54:52	0.001	0.001
8-Sep-2015	12:58:52	0.000	0.001
8-Sep-2015	13:02:52	0.001	0.001
8-Sep-2015	13:06:52	0.003	0.003
8-Sep-2015	13:10:52	0.005	0.005
8-Sep-2015	13:14:52	0.006	0.005
8-Sep-2015	13:18:52	0.003	0.003
8-Sep-2015	13:22:52	0.000	0.001
8-Sep-2015	13:26:52	0.000	0.000
8-Sep-2015	13:30:52	0.000	0.000
8-Sep-2015	13:34:52	0.000	0.000
8-Sep-2015	13:38:52	0.000	0.000
8-Sep-2015	13:42:52	0.001	0.001
8-Sep-2015	13:46:52	0.003	0.003
8-Sep-2015	13:50:52	0.005	0.005
8-Sep-2015	13:54:52	0.006	0.005
8-Sep-2015	13:58:52	0.003	0.006
8-Sep-2015	14:02:52	0.008	0.005
8-Sep-2015	14:06:52	0.003	0.006
8-Sep-2015	14:10:52	0.007	0.005
8-Sep-2015	14:14:52	0.005	0.005
8-Sep-2015	14:18:52	0.004	0.005
8-Sep-2015	14:22:52	0.006	0.004
8-Sep-2015	14:26:52	0.001	0.018
8-Sep-2015	14:30:52	0.048	0.017
8-Sep-2015	14:34:52	0.001	0.016
8-Sep-2015	14:38:52	0.000	0.000
8-Sep-2015	14:42:52	0.000	0.000
8-Sep-2015	14:46:52	0.001	0.008
8-Sep-2015	14:50:52	0.022	0.008

DUST MONITORING

September 2015

shading indicates values over the threshold

Monitor: 3

Threshold: 0.15 (mg/m^3)

Date	Time	Value (mg/m^3)	TWA (mg/m^3)
8-Sep-2015	14:54:52	0.000	0.007
8-Sep-2015	14:58:52	0.000	0.000
8-Sep-2015	15:02:52	0.000	0.000
8-Sep-2015	15:06:52	0.000	0.000
8-Sep-2015	15:10:52	0.000	0.000
8-Sep-2015	15:14:52	0.001	0.000
8-Sep-2015	15:18:52	0.000	0.000
8-Sep-2015	15:22:52	0.000	0.001
8-Sep-2015	15:26:52	0.002	0.001
8-Sep-2015	15:30:52	0.000	0.001
9-Sep-2015	08:10:38	0.012	0.017
9-Sep-2015	08:14:38	0.021	0.017
9-Sep-2015	08:18:38	0.019	0.018
9-Sep-2015	08:22:38	0.014	3.311
9-Sep-2015	08:26:38	9.900	30.738
9-Sep-2015	08:30:38	82.300	166.133
9-Sep-2015	08:34:38	406.200	250.900
9-Sep-2015	08:38:38	264.200	283.433
9-Sep-2015	08:42:38	179.900	165.000
9-Sep-2015	08:46:38	50.900	76.934
9-Sep-2015	08:50:38	0.001	16.967
9-Sep-2015	08:54:38	0.001	0.001
9-Sep-2015	08:58:38	0.001	0.001
9-Sep-2015	09:02:38	0.002	0.002
9-Sep-2015	09:06:38	0.003	0.792
9-Sep-2015	09:10:38	2.370	0.793
9-Sep-2015	09:14:38	0.006	0.801
9-Sep-2015	09:18:38	0.027	0.059
9-Sep-2015	09:22:38	0.144	0.177
9-Sep-2015	09:26:38	0.360	34.768
9-Sep-2015	09:30:38	103.800	34.720
9-Sep-2015	09:34:38	0.001	34.601
9-Sep-2015	09:38:38	0.003	0.001
9-Sep-2015	09:42:38	0.000	0.001
9-Sep-2015	09:46:38	0.000	0.003
9-Sep-2015	09:50:38	0.008	0.004
9-Sep-2015	09:54:38	0.003	0.010
9-Sep-2015	09:58:38	0.018	0.009
9-Sep-2015	10:02:38	0.006	0.008
9-Sep-2015	10:06:38	0.000	0.002
9-Sep-2015	10:10:38	0.000	0.002

DUST MONITORING

September 2015

shading indicates values over the threshold

Monitor: 3

Threshold: 0.15 (mg/m^3)

Date	Time	Value (mg/m^3)	TWA (mg/m^3)
9-Sep-2015	10:14:38	0.005	0.002
9-Sep-2015	10:18:38	0.000	0.002
9-Sep-2015	10:22:38	0.000	0.006
9-Sep-2015	10:26:38	0.018	0.006
9-Sep-2015	10:30:38	0.001	0.006
9-Sep-2015	10:34:38	0.000	0.001
9-Sep-2015	10:38:38	0.001	0.002
9-Sep-2015	10:42:38	0.004	0.008
9-Sep-2015	10:46:38	0.019	0.008
9-Sep-2015	10:50:38	0.002	0.027
9-Sep-2015	10:54:38	0.059	0.020
9-Sep-2015	10:58:38	0.000	0.020
9-Sep-2015	11:02:38	0.000	0.008
9-Sep-2015	11:06:38	0.024	0.258
9-Sep-2015	11:10:38	0.749	0.638
9-Sep-2015	11:14:38	1.142	0.985
9-Sep-2015	11:18:38	1.064	0.741
9-Sep-2015	11:22:38	0.017	0.365
9-Sep-2015	11:26:38	0.014	0.023
9-Sep-2015	11:30:38	0.039	0.025
9-Sep-2015	11:34:38	0.022	0.023
9-Sep-2015	11:38:38	0.007	0.011
9-Sep-2015	11:42:38	0.004	0.005
9-Sep-2015	11:46:38	0.005	0.004
9-Sep-2015	11:50:38	0.004	0.005
9-Sep-2015	11:54:38	0.005	0.004
9-Sep-2015	11:58:38	0.004	0.004
9-Sep-2015	12:02:38	0.004	0.004
9-Sep-2015	12:06:38	0.004	0.004
9-Sep-2015	12:10:38	0.003	0.004
9-Sep-2015	12:14:38	0.004	0.004
9-Sep-2015	12:18:38	0.004	0.004
9-Sep-2015	12:22:38	0.005	0.004
9-Sep-2015	12:26:38	0.004	0.005
9-Sep-2015	12:30:38	0.007	0.004
9-Sep-2015	12:34:38	0.002	0.004
9-Sep-2015	12:38:38	0.003	0.004
9-Sep-2015	12:42:38	0.007	0.004
9-Sep-2015	12:46:38	0.003	0.004
9-Sep-2015	12:50:38	0.003	0.002
9-Sep-2015	12:54:38	0.000	0.001

DUST MONITORING

September 2015

shading indicates values over the threshold

Monitor: 3

Threshold: 0.15 (mg/m^3)

Date	Time	Value (mg/m^3)	TWA (mg/m^3)
9-Sep-2015	12:58:38	0.000	0.000
9-Sep-2015	13:02:38	0.000	0.000
9-Sep-2015	13:06:38	0.000	0.000
9-Sep-2015	13:10:38	0.000	0.000
9-Sep-2015	13:14:38	0.000	0.000
9-Sep-2015	13:18:38	0.000	0.000
9-Sep-2015	13:22:38	0.000	0.000
9-Sep-2015	13:26:38	0.000	0.000
9-Sep-2015	13:30:38	0.000	0.004
9-Sep-2015	13:34:38	0.011	0.009
9-Sep-2015	13:38:38	0.017	0.015
9-Sep-2015	13:42:38	0.018	0.018
9-Sep-2015	13:46:38	0.019	0.019
9-Sep-2015	13:50:38	0.019	0.019
9-Sep-2015	13:54:38	0.019	0.019
9-Sep-2015	13:58:38	0.019	0.019
9-Sep-2015	14:02:38	0.019	0.019
9-Sep-2015	14:06:38	0.020	0.019
9-Sep-2015	14:10:38	0.019	0.020
11-Sep-2015	07:37:31	0.709	0.699
11-Sep-2015	07:41:31	0.688	0.755
11-Sep-2015	07:45:31	0.869	0.796
11-Sep-2015	07:49:31	0.831	0.758
11-Sep-2015	07:53:31	0.573	0.567
11-Sep-2015	07:57:31	0.298	0.360
11-Sep-2015	08:01:31	0.209	0.183
11-Sep-2015	08:05:31	0.042	0.093
11-Sep-2015	08:09:31	0.028	0.032
11-Sep-2015	08:13:31	0.025	0.028
11-Sep-2015	08:17:31	0.030	0.026
11-Sep-2015	08:21:31	0.022	0.025
11-Sep-2015	08:25:31	0.022	0.022
11-Sep-2015	08:29:31	0.021	0.020
11-Sep-2015	08:33:31	0.018	0.018
11-Sep-2015	08:37:31	0.016	0.015
11-Sep-2015	08:41:31	0.012	0.013
11-Sep-2015	08:45:31	0.010	0.012
11-Sep-2015	08:49:31	0.013	0.011
11-Sep-2015	08:53:31	0.011	0.012
11-Sep-2015	08:57:31	0.011	0.011
11-Sep-2015	09:01:31	0.010	0.010

DUST MONITORING

September 2015

shading indicates values over the threshold

Monitor: 3

Threshold: 0.15 (mg/m^3)

Date	Time	Value (mg/m^3)	TWA (mg/m^3)
11-Sep-2015	09:05:31	0.008	0.009
11-Sep-2015	09:09:31	0.009	0.009
11-Sep-2015	09:13:31	0.009	0.009
11-Sep-2015	09:17:31	0.008	0.007
11-Sep-2015	09:21:31	0.005	0.005
11-Sep-2015	09:25:31	0.003	0.004
11-Sep-2015	09:29:31	0.004	0.003
11-Sep-2015	09:33:31	0.003	0.004
11-Sep-2015	09:37:31	0.004	0.003
11-Sep-2015	09:41:31	0.003	0.004
11-Sep-2015	09:45:31	0.004	0.004
11-Sep-2015	09:49:31	0.004	0.004
11-Sep-2015	09:53:31	0.003	0.003
11-Sep-2015	09:57:31	0.002	0.002
11-Sep-2015	10:01:31	0.002	0.002
11-Sep-2015	10:05:31	0.001	0.001
11-Sep-2015	10:09:31	0.001	0.001
11-Sep-2015	10:13:31	0.000	0.000
11-Sep-2015	10:17:31	0.000	0.000
11-Sep-2015	10:21:31	0.000	0.001
11-Sep-2015	10:25:31	0.002	0.001
11-Sep-2015	10:29:31	0.000	0.001
11-Sep-2015	10:33:31	0.000	0.000
11-Sep-2015	10:37:31	0.000	0.001
11-Sep-2015	10:41:31	0.002	0.001
11-Sep-2015	10:45:31	0.000	0.001
11-Sep-2015	10:49:31	0.000	0.000
11-Sep-2015	10:53:31	0.000	0.000
11-Sep-2015	10:57:31	0.000	0.000
11-Sep-2015	11:01:31	0.000	0.000
11-Sep-2015	11:05:31	0.000	0.000
11-Sep-2015	11:09:31	0.001	0.000
11-Sep-2015	11:13:31	0.000	0.000
11-Sep-2015	11:17:31	0.000	0.000
11-Sep-2015	11:21:31	0.000	0.000
11-Sep-2015	11:25:31	0.000	0.000
11-Sep-2015	11:29:31	0.000	0.000
11-Sep-2015	11:33:31	0.000	0.000
11-Sep-2015	11:37:31	0.000	0.000
11-Sep-2015	11:41:31	0.000	0.000
11-Sep-2015	11:45:31	0.000	0.000

DUST MONITORING

September 2015

shading indicates values over the threshold

Monitor: 3

Threshold: 0.15 (mg/m^3)

Date	Time	Value (mg/m^3)	TWA (mg/m^3)
11-Sep-2015	11:49:31	0.000	0.000
11-Sep-2015	11:53:31	0.000	0.000
11-Sep-2015	11:57:31	0.000	0.000
11-Sep-2015	12:01:31	0.000	0.000
11-Sep-2015	12:05:31	0.000	0.000
11-Sep-2015	12:09:31	0.000	0.000
11-Sep-2015	12:13:31	0.000	0.000
11-Sep-2015	12:17:31	0.000	0.001
11-Sep-2015	12:21:31	0.002	0.001
11-Sep-2015	12:25:31	0.000	0.001
11-Sep-2015	12:29:31	0.000	0.000
11-Sep-2015	12:33:31	0.000	0.000
11-Sep-2015	12:37:31	0.000	0.000
11-Sep-2015	12:41:31	0.000	0.000
11-Sep-2015	12:45:31	0.000	0.000
11-Sep-2015	12:49:31	0.000	0.000
11-Sep-2015	12:53:31	0.000	0.000
11-Sep-2015	12:57:31	0.000	0.000
11-Sep-2015	13:01:31	0.000	0.000
11-Sep-2015	13:05:31	0.000	0.000
11-Sep-2015	13:09:31	0.000	0.000
11-Sep-2015	13:13:31	0.000	0.000
11-Sep-2015	13:17:31	0.000	0.000
11-Sep-2015	13:21:31	0.000	0.000
11-Sep-2015	13:25:31	0.000	0.000
11-Sep-2015	13:29:31	0.000	0.000
11-Sep-2015	13:33:31	0.000	0.000
11-Sep-2015	13:37:31	0.000	0.000
11-Sep-2015	13:41:31	0.000	0.000
11-Sep-2015	13:45:31	0.000	0.000
11-Sep-2015	13:49:31	0.000	0.000
11-Sep-2015	13:53:31	0.000	0.000
11-Sep-2015	13:57:31	0.000	0.000
11-Sep-2015	14:01:31	0.000	0.000
11-Sep-2015	14:05:31	0.000	0.000
11-Sep-2015	14:09:31	0.000	0.000
11-Sep-2015	14:13:31	0.000	0.000
11-Sep-2015	14:17:31	0.000	0.000
11-Sep-2015	14:21:31	0.000	0.000
11-Sep-2015	14:25:31	0.000	0.000
11-Sep-2015	14:29:31	0.000	0.000

DUST MONITORING

September 2015

shading indicates values over the threshold

Monitor: 3

Threshold: 0.15 (mg/m^3)

Date	Time	Value (mg/m^3)	TWA (mg/m^3)
11-Sep-2015	14:33:31	0.000	0.000
11-Sep-2015	14:37:31	0.000	0.000
11-Sep-2015	14:41:31	0.000	0.000
11-Sep-2015	14:45:31	0.000	0.000
11-Sep-2015	14:49:31	0.000	0.000
11-Sep-2015	14:53:31	0.000	0.000
11-Sep-2015	14:57:31	0.000	0.000
11-Sep-2015	15:01:31	0.000	0.000
11-Sep-2015	15:05:31	0.000	0.000
11-Sep-2015	15:09:31	0.000	0.000
11-Sep-2015	15:13:31	0.000	0.000
11-Sep-2015	15:17:31	0.000	0.000
11-Sep-2015	15:21:31	0.000	0.001
11-Sep-2015	15:25:31	0.002	0.001
11-Sep-2015	15:29:31	0.000	0.001
11-Sep-2015	15:33:31	0.000	0.000
11-Sep-2015	15:37:31	0.000	0.000
11-Sep-2015	15:41:31	0.000	0.000
11-Sep-2015	15:45:31	0.000	0.000
11-Sep-2015	15:49:31	0.000	0.000
11-Sep-2015	15:53:31	0.000	0.000
11-Sep-2015	15:57:31	0.000	0.000
11-Sep-2015	16:01:31	0.000	0.000
11-Sep-2015	16:05:31	0.000	0.000
11-Sep-2015	16:09:31	0.000	0.000
11-Sep-2015	16:13:31	0.000	0.000
14-Sep-2015	07:44:27	0.002	0.001
14-Sep-2015	07:48:27	0.000	0.001
14-Sep-2015	07:52:27	0.000	0.000
14-Sep-2015	07:56:27	0.000	0.000
14-Sep-2015	08:00:27	0.000	0.000
14-Sep-2015	08:04:27	0.000	0.000
14-Sep-2015	08:08:27	0.000	0.000
14-Sep-2015	08:12:27	0.000	0.000
14-Sep-2015	08:16:27	0.000	0.000
14-Sep-2015	08:20:27	0.000	0.000
14-Sep-2015	08:24:27	0.000	0.000
14-Sep-2015	08:28:27	0.000	0.000
14-Sep-2015	08:32:27	0.000	0.000
14-Sep-2015	08:36:27	0.000	0.000
14-Sep-2015	08:40:27	0.000	0.000

DUST MONITORING

September 2015

shading indicates values over the threshold

Monitor: 3

Threshold: 0.15 (mg/m^3)

Date	Time	Value (mg/m^3)	TWA (mg/m^3)
14-Sep-2015	08:44:27	0.000	0.000
14-Sep-2015	08:48:27	0.000	0.000
14-Sep-2015	08:52:27	0.000	0.000
14-Sep-2015	08:56:27	0.000	0.000
14-Sep-2015	09:00:27	0.000	0.000
14-Sep-2015	09:04:27	0.000	0.000
14-Sep-2015	09:08:27	0.000	0.000
14-Sep-2015	09:12:27	0.000	0.000
14-Sep-2015	09:16:27	0.000	0.000
14-Sep-2015	09:20:27	0.000	0.000
14-Sep-2015	09:24:27	0.000	0.000
14-Sep-2015	09:28:27	0.000	0.000
14-Sep-2015	09:32:27	0.000	0.000
15-Sep-2015	07:10:26	0.001	0.001
15-Sep-2015	07:14:26	0.000	0.000
15-Sep-2015	07:18:26	0.000	0.000
15-Sep-2015	07:22:26	0.001	0.000
15-Sep-2015	07:26:26	0.000	0.000
15-Sep-2015	07:30:26	0.000	0.000
15-Sep-2015	07:34:26	0.001	0.001
15-Sep-2015	07:38:26	0.002	0.001
15-Sep-2015	07:42:26	0.001	0.002
15-Sep-2015	07:46:26	0.002	0.001
15-Sep-2015	07:50:26	0.000	0.001
15-Sep-2015	07:54:26	0.000	0.000
15-Sep-2015	07:58:26	0.000	0.000
15-Sep-2015	08:02:26	0.000	0.000
15-Sep-2015	08:06:26	0.000	0.002
15-Sep-2015	08:10:26	0.005	0.003
15-Sep-2015	08:14:26	0.004	0.004
15-Sep-2015	08:18:26	0.002	0.002
15-Sep-2015	08:22:26	0.000	0.001
15-Sep-2015	08:26:26	0.000	0.000
15-Sep-2015	08:30:26	0.000	0.001
15-Sep-2015	08:34:26	0.002	0.001
15-Sep-2015	08:38:26	0.001	0.001
15-Sep-2015	08:42:26	0.000	0.000
15-Sep-2015	08:46:26	0.000	0.000
15-Sep-2015	08:50:26	0.000	0.004
15-Sep-2015	08:54:26	0.012	0.004
15-Sep-2015	08:58:26	0.000	0.004

DUST MONITORING

September 2015

shading indicates values over the threshold

Monitor: 3

Threshold: 0.15 (mg/m^3)

Date	Time	Value (mg/m^3)	TWA (mg/m^3)
15-Sep-2015	09:02:26	0.000	0.018
15-Sep-2015	09:06:26	0.055	0.032
15-Sep-2015	09:10:26	0.042	0.069
15-Sep-2015	09:14:26	0.110	0.056
15-Sep-2015	09:18:26	0.017	0.042
15-Sep-2015	09:22:26	0.000	0.006
15-Sep-2015	09:26:26	0.000	0.000
15-Sep-2015	09:30:26	0.000	0.029
15-Sep-2015	09:34:26	0.087	0.032
15-Sep-2015	09:38:26	0.009	0.037
15-Sep-2015	09:42:26	0.015	0.063
15-Sep-2015	09:46:26	0.164	0.063
15-Sep-2015	09:50:26	0.011	0.061
15-Sep-2015	09:54:26	0.007	0.006
15-Sep-2015	09:58:26	0.001	0.003
15-Sep-2015	10:02:26	0.000	0.001
15-Sep-2015	10:06:26	0.002	0.004
15-Sep-2015	10:10:26	0.010	0.004
15-Sep-2015	10:14:26	0.000	0.008
15-Sep-2015	10:18:26	0.015	0.006
15-Sep-2015	10:22:26	0.002	0.006
15-Sep-2015	10:26:26	0.000	0.001
15-Sep-2015	10:30:26	0.000	0.000
15-Sep-2015	10:34:26	0.000	0.000
15-Sep-2015	10:38:26	0.001	0.006
15-Sep-2015	10:42:26	0.016	0.006
15-Sep-2015	10:46:26	0.001	0.006
15-Sep-2015	10:50:26	0.000	0.000
15-Sep-2015	10:54:26	0.000	0.000
15-Sep-2015	10:58:26	0.000	0.009
15-Sep-2015	11:02:26	0.027	0.009
15-Sep-2015	11:06:26	0.000	0.009
15-Sep-2015	11:10:26	0.000	0.000
15-Sep-2015	11:14:26	0.000	0.000
15-Sep-2015	11:18:26	0.000	0.000
15-Sep-2015	11:22:26	0.000	0.011
15-Sep-2015	11:26:26	0.032	0.013
15-Sep-2015	11:30:26	0.008	0.014
15-Sep-2015	11:34:26	0.001	0.004
15-Sep-2015	11:38:26	0.002	0.002
15-Sep-2015	11:42:26	0.002	0.019

DUST MONITORING

September 2015

shading indicates values over the threshold

Monitor: 3

Threshold: 0.15 (mg/m^3)

Date	Time	Value (mg/m^3)	TWA (mg/m^3)
15-Sep-2015	11:46:26	0.053	0.019
15-Sep-2015	11:50:26	0.001	0.018
15-Sep-2015	11:54:26	0.001	0.001
15-Sep-2015	11:58:26	0.000	0.077
15-Sep-2015	12:02:26	0.231	0.078
15-Sep-2015	12:06:26	0.002	0.094
15-Sep-2015	12:10:26	0.048	0.017
15-Sep-2015	12:14:26	0.001	0.018
15-Sep-2015	12:18:26	0.004	0.002
15-Sep-2015	12:22:26	0.000	0.001
15-Sep-2015	12:26:26	0.000	0.000
15-Sep-2015	12:30:26	0.000	0.000
15-Sep-2015	12:34:26	0.000	0.000
15-Sep-2015	12:38:26	0.000	0.000
15-Sep-2015	12:42:26	0.000	0.000
15-Sep-2015	12:46:26	0.000	0.003
15-Sep-2015	12:50:26	0.008	0.035
15-Sep-2015	12:54:26	0.098	0.092
15-Sep-2015	12:58:26	0.171	0.090
15-Sep-2015	13:02:26	0.002	0.061
15-Sep-2015	13:06:26	0.011	0.022
15-Sep-2015	13:10:26	0.052	0.048
15-Sep-2015	13:14:26	0.081	0.045
15-Sep-2015	13:18:26	0.001	0.028
15-Sep-2015	13:22:26	0.002	0.001
15-Sep-2015	13:26:26	0.001	0.021
15-Sep-2015	13:30:26	0.061	0.028
15-Sep-2015	13:34:26	0.021	0.027
15-Sep-2015	13:38:26	0.000	0.007
15-Sep-2015	13:42:26	0.000	0.015
15-Sep-2015	13:46:26	0.044	0.015
15-Sep-2015	13:50:26	0.002	0.036
15-Sep-2015	13:54:26	0.063	0.023
15-Sep-2015	13:58:26	0.003	0.022
15-Sep-2015	14:02:26	0.000	0.001
15-Sep-2015	14:06:26	0.000	0.002
15-Sep-2015	14:10:26	0.005	0.002
15-Sep-2015	14:14:26	0.000	0.002
15-Sep-2015	14:18:26	0.000	0.000
15-Sep-2015	14:22:26	0.000	0.000
15-Sep-2015	14:26:26	0.000	0.003

DUST MONITORING

September 2015

shading indicates values over the threshold

Monitor: 3

Threshold: 0.15 (mg/m^3)

Date	Time	Value (mg/m^3)	TWA (mg/m^3)
15-Sep-2015	14:30:26	0.010	0.004
15-Sep-2015	14:34:26	0.002	0.004
15-Sep-2015	14:38:26	0.000	0.001
15-Sep-2015	14:42:26	0.002	0.001
15-Sep-2015	14:46:26	0.001	0.001
15-Sep-2015	14:50:26	0.000	0.000
15-Sep-2015	14:54:26	0.000	0.000
15-Sep-2015	14:58:26	0.001	0.001
15-Sep-2015	15:02:26	0.003	0.002
15-Sep-2015	15:06:26	0.002	0.006
15-Sep-2015	15:10:26	0.013	0.006
15-Sep-2015	15:14:26	0.004	0.006
15-Sep-2015	15:18:26	0.000	0.002
16-Sep-2015	10:40:49	0.077	0.039
16-Sep-2015	10:44:49	0.000	0.026
16-Sep-2015	10:48:49	0.001	0.004
16-Sep-2015	10:52:49	0.012	0.014
16-Sep-2015	10:56:49	0.028	0.038
16-Sep-2015	11:00:49	0.075	0.048
16-Sep-2015	11:04:49	0.041	0.067
16-Sep-2015	11:08:49	0.086	0.045
16-Sep-2015	11:12:49	0.009	0.048
16-Sep-2015	11:16:49	0.049	0.021
16-Sep-2015	11:20:49	0.006	0.020
16-Sep-2015	11:24:49	0.004	0.016
16-Sep-2015	11:28:49	0.039	0.046
16-Sep-2015	11:32:49	0.096	0.074
16-Sep-2015	11:36:49	0.088	0.070
16-Sep-2015	11:40:49	0.027	0.039
16-Sep-2015	11:44:49	0.003	0.011
16-Sep-2015	11:48:49	0.002	0.002
16-Sep-2015	11:52:49	0.001	0.003
16-Sep-2015	11:56:49	0.005	0.003
16-Sep-2015	12:00:49	0.002	0.005
16-Sep-2015	12:04:49	0.009	0.004
16-Sep-2015	12:08:49	0.001	0.004
16-Sep-2015	12:12:49	0.002	0.002
16-Sep-2015	12:16:49	0.002	0.002
16-Sep-2015	12:20:49	0.002	0.004
16-Sep-2015	12:24:49	0.007	0.007
16-Sep-2015	12:28:49	0.013	0.009

DUST MONITORING

September 2015

shading indicates values over the threshold

Monitor: 3

Threshold: 0.15 (mg/m^3)

Date	Time	Value (mg/m^3)	TWA (mg/m^3)
16-Sep-2015	12:32:49	0.006	0.007
16-Sep-2015	12:36:49	0.003	0.004
16-Sep-2015	12:40:49	0.002	0.002
16-Sep-2015	12:44:49	0.000	0.008
16-Sep-2015	12:48:49	0.021	0.009
16-Sep-2015	12:52:49	0.005	0.010
16-Sep-2015	12:56:49	0.003	0.004
16-Sep-2015	13:00:49	0.003	0.003
16-Sep-2015	13:04:49	0.003	0.003
16-Sep-2015	13:08:49	0.004	0.003
16-Sep-2015	13:12:49	0.003	0.003
16-Sep-2015	13:16:49	0.002	0.006
16-Sep-2015	13:20:49	0.014	0.007
16-Sep-2015	13:24:49	0.004	0.018
16-Sep-2015	13:28:49	0.036	0.014
16-Sep-2015	13:32:49	0.002	0.014
16-Sep-2015	13:36:49	0.004	0.021
16-Sep-2015	13:40:49	0.058	0.031
16-Sep-2015	13:44:49	0.031	0.043
16-Sep-2015	13:48:49	0.040	0.055
16-Sep-2015	13:52:49	0.094	0.045
16-Sep-2015	13:56:49	0.002	0.048
17-Sep-2015	06:55:32	0.045	0.035
17-Sep-2015	06:59:32	0.024	0.031
17-Sep-2015	07:03:32	0.023	0.028
17-Sep-2015	07:07:32	0.036	0.100
17-Sep-2015	07:11:32	0.241	0.099
17-Sep-2015	07:15:32	0.019	0.092
17-Sep-2015	07:19:32	0.017	0.017
17-Sep-2015	07:23:32	0.016	0.105
17-Sep-2015	07:27:32	0.281	0.106
17-Sep-2015	07:31:32	0.021	0.106
17-Sep-2015	07:35:32	0.017	0.020
17-Sep-2015	07:39:32	0.021	0.042
17-Sep-2015	07:43:32	0.087	0.057
17-Sep-2015	07:47:32	0.064	0.052
17-Sep-2015	07:51:32	0.006	0.025
17-Sep-2015	07:55:32	0.006	0.013
17-Sep-2015	07:59:32	0.028	0.026
17-Sep-2015	08:03:32	0.045	0.037
17-Sep-2015	08:07:32	0.038	0.057

DUST MONITORING

September 2015

shading indicates values over the threshold

Monitor: 3

Threshold: 0.15 (mg/m^3)

Date	Time	Value (mg/m^3)	TWA (mg/m^3)
17-Sep-2015	08:11:32	0.089	0.059
17-Sep-2015	08:15:32	0.051	0.072
17-Sep-2015	08:19:32	0.075	0.055
17-Sep-2015	08:23:32	0.040	0.053
17-Sep-2015	08:27:32	0.045	0.043
17-Sep-2015	08:31:32	0.043	0.041
17-Sep-2015	08:35:32	0.036	0.043
17-Sep-2015	08:39:32	0.051	0.041
17-Sep-2015	08:43:32	0.035	0.040
17-Sep-2015	08:47:32	0.035	0.035
17-Sep-2015	08:51:32	0.036	0.035
17-Sep-2015	08:55:32	0.035	0.041
17-Sep-2015	08:59:32	0.051	0.040
17-Sep-2015	09:03:32	0.035	0.040
17-Sep-2015	09:07:32	0.035	0.050
17-Sep-2015	09:11:32	0.080	0.051
17-Sep-2015	09:15:32	0.038	0.056
17-Sep-2015	09:19:32	0.050	0.041
17-Sep-2015	09:23:32	0.034	0.039
17-Sep-2015	09:27:32	0.034	0.034
17-Sep-2015	09:31:32	0.035	0.034
17-Sep-2015	09:35:32	0.034	0.035
17-Sep-2015	09:39:32	0.035	0.035
17-Sep-2015	09:43:32	0.037	0.035
17-Sep-2015	09:47:32	0.034	0.035
17-Sep-2015	09:51:32	0.034	0.034
17-Sep-2015	09:55:32	0.035	0.035
17-Sep-2015	09:59:32	0.036	0.035
17-Sep-2015	10:03:32	0.035	0.035
17-Sep-2015	10:07:32	0.035	0.035
17-Sep-2015	10:11:32	0.035	0.035
17-Sep-2015	10:15:32	0.035	0.036
17-Sep-2015	10:19:32	0.037	0.040
17-Sep-2015	10:23:32	0.047	0.040
17-Sep-2015	10:27:32	0.035	0.039
17-Sep-2015	10:31:32	0.034	0.035
17-Sep-2015	10:35:32	0.037	0.036
17-Sep-2015	10:39:32	0.037	0.038
17-Sep-2015	10:43:32	0.039	0.036
17-Sep-2015	10:47:32	0.033	0.035
17-Sep-2015	10:51:32	0.033	0.046

DUST MONITORING

September 2015

shading indicates values over the threshold

Monitor: 3

Threshold: 0.15 (mg/m^3)

Date	Time	Value (mg/m^3)	TWA (mg/m^3)
17-Sep-2015	10:55:32	0.071	0.046
17-Sep-2015	10:59:32	0.033	0.048
17-Sep-2015	11:03:32	0.039	0.036
17-Sep-2015	11:07:32	0.035	0.036
17-Sep-2015	11:11:32	0.033	0.034
17-Sep-2015	11:15:32	0.033	0.033
17-Sep-2015	11:19:32	0.032	0.033
17-Sep-2015	11:23:32	0.034	0.033
17-Sep-2015	11:27:32	0.032	0.032
17-Sep-2015	11:31:32	0.031	0.031
17-Sep-2015	11:35:32	0.031	0.031
17-Sep-2015	11:39:32	0.032	0.032
17-Sep-2015	11:43:32	0.034	0.033
17-Sep-2015	11:47:32	0.032	0.033
17-Sep-2015	11:51:32	0.032	0.032
17-Sep-2015	11:55:32	0.031	0.031
17-Sep-2015	11:59:32	0.031	0.031
17-Sep-2015	12:03:32	0.031	0.032
17-Sep-2015	12:07:32	0.033	0.040
17-Sep-2015	12:11:32	0.057	0.040
17-Sep-2015	12:15:32	0.031	0.041
17-Sep-2015	12:19:32	0.034	0.031
17-Sep-2015	12:23:32	0.029	0.031
17-Sep-2015	12:27:32	0.029	0.029
17-Sep-2015	12:31:32	0.030	0.134
17-Sep-2015	12:35:32	0.342	0.135
17-Sep-2015	12:39:32	0.032	0.134
17-Sep-2015	12:43:32	0.029	0.029
17-Sep-2015	12:47:32	0.027	0.028
17-Sep-2015	12:51:32	0.028	0.041
17-Sep-2015	12:55:32	0.069	0.042
17-Sep-2015	12:59:32	0.029	0.042
17-Sep-2015	13:03:32	0.027	0.028
17-Sep-2015	13:07:32	0.027	0.028
17-Sep-2015	13:11:32	0.031	0.028
17-Sep-2015	13:15:32	0.027	0.029
17-Sep-2015	13:19:32	0.028	0.028
17-Sep-2015	13:23:32	0.028	0.028
17-Sep-2015	13:27:32	0.028	0.022
17-Sep-2015	13:31:32	0.011	0.030
17-Sep-2015	13:35:32	0.050	0.031

DUST MONITORING

September 2015

shading indicates values over the threshold

Monitor: 3

Threshold: 0.15 (mg/m^3)

Date	Time	Value (mg/m^3)	TWA (mg/m^3)
17-Sep-2015	13:39:32	0.032	0.037
17-Sep-2015	13:43:32	0.029	0.033
17-Sep-2015	13:47:32	0.038	0.032
17-Sep-2015	13:51:32	0.030	0.051
17-Sep-2015	13:55:32	0.084	0.049
17-Sep-2015	13:59:32	0.032	0.048
17-Sep-2015	14:03:32	0.029	0.030
17-Sep-2015	14:07:32	0.028	0.028
17-Sep-2015	14:11:32	0.028	0.028
17-Sep-2015	14:15:32	0.027	0.027
17-Sep-2015	14:19:32	0.027	0.027
17-Sep-2015	14:23:32	0.027	0.031
17-Sep-2015	14:27:32	0.039	0.033
17-Sep-2015	14:31:32	0.032	0.034
17-Sep-2015	14:35:32	0.031	0.030
17-Sep-2015	14:39:32	0.028	0.029
17-Sep-2015	14:43:32	0.028	0.028
17-Sep-2015	14:47:32	0.028	0.028
17-Sep-2015	14:51:32	0.028	0.028
17-Sep-2015	14:55:32	0.028	0.028
17-Sep-2015	14:59:32	0.029	0.029
17-Sep-2015	15:03:32	0.029	0.029
17-Sep-2015	15:07:32	0.029	0.029
17-Sep-2015	15:11:32	0.028	0.028
17-Sep-2015	15:15:32	0.028	0.031
17-Sep-2015	15:19:32	0.037	0.031
17-Sep-2015	15:23:32	0.029	0.034
17-Sep-2015	15:27:32	0.036	0.032
17-Sep-2015	15:31:32	0.031	0.032
17-Sep-2015	15:35:32	0.028	0.030
17-Sep-2015	15:39:32	0.031	0.029
17-Sep-2015	15:43:32	0.029	0.030
17-Sep-2015	15:47:32	0.030	0.029
17-Sep-2015	15:51:32	0.029	0.029
17-Sep-2015	15:55:32	0.029	0.029
17-Sep-2015	15:59:32	0.029	0.029
17-Sep-2015	16:03:32	0.029	0.030
17-Sep-2015	16:07:32	0.031	0.030
17-Sep-2015	16:11:32	0.031	0.031
17-Sep-2015	16:15:32	0.030	0.030
17-Sep-2015	16:19:32	0.030	0.030

DUST MONITORING

September 2015

shading indicates values over the threshold

Monitor: 3

Threshold: 0.15 (mg/m^3)

Date	Time	Value (mg/m^3)	TWA (mg/m^3)
17-Sep-2015	16:23:32	0.029	0.029
17-Sep-2015	16:27:32	0.027	0.028
17-Sep-2015	16:31:32	0.029	0.022
17-Sep-2015	16:35:32	0.009	0.015
17-Sep-2015	16:39:32	0.007	0.016
17-Sep-2015	16:43:32	0.032	0.020
18-Sep-2015	08:20:10	0.012	0.006
18-Sep-2015	08:24:10	0.000	0.004
18-Sep-2015	08:28:10	0.000	0.000
18-Sep-2015	08:32:10	0.000	0.000
18-Sep-2015	08:36:10	0.000	0.000
18-Sep-2015	08:40:10	0.000	0.000
18-Sep-2015	08:44:10	0.000	0.000
18-Sep-2015	08:48:10	0.000	0.000
18-Sep-2015	08:52:10	0.000	0.000
18-Sep-2015	08:56:10	0.000	0.003
18-Sep-2015	09:00:10	0.009	0.003
18-Sep-2015	09:04:10	0.000	0.003
18-Sep-2015	09:08:10	0.000	0.000
18-Sep-2015	09:12:10	0.000	0.016
18-Sep-2015	09:16:10	0.047	0.016
18-Sep-2015	09:20:10	0.000	0.016
18-Sep-2015	09:24:10	0.000	0.000
18-Sep-2015	09:28:10	0.000	0.000
18-Sep-2015	09:32:10	0.000	0.000
18-Sep-2015	09:36:10	0.000	0.000
18-Sep-2015	09:40:10	0.000	0.000
18-Sep-2015	09:44:10	0.000	0.000
18-Sep-2015	09:48:10	0.000	0.000
18-Sep-2015	09:52:10	0.000	0.000
18-Sep-2015	09:56:10	0.000	0.000
18-Sep-2015	10:00:10	0.000	0.000
22-Sep-2015	08:50:27	0.001	0.001
22-Sep-2015	08:54:27	0.000	0.001
22-Sep-2015	08:58:27	0.001	0.000
22-Sep-2015	09:02:27	0.000	0.003
22-Sep-2015	09:06:27	0.009	0.003
22-Sep-2015	09:10:27	0.000	0.003
22-Sep-2015	09:14:27	0.000	0.000
22-Sep-2015	09:18:27	0.000	0.005
22-Sep-2015	09:22:27	0.016	0.005

DUST MONITORING

September 2015

shading indicates values over the threshold

Monitor: 3

Threshold: 0.15 (mg/m^3)

Date	Time	Value (mg/m^3)	TWA (mg/m^3)
22-Sep-2015	09:26:27	0.000	0.005
22-Sep-2015	09:30:27	0.000	0.000
22-Sep-2015	09:34:27	0.000	0.000
22-Sep-2015	09:38:27	0.000	0.003
22-Sep-2015	09:42:27	0.010	0.003
22-Sep-2015	09:46:27	0.000	0.003
22-Sep-2015	09:50:27	0.000	0.000
22-Sep-2015	09:54:27	0.000	0.001
22-Sep-2015	09:58:27	0.002	0.001
22-Sep-2015	10:02:27	0.000	0.001
22-Sep-2015	10:06:27	0.000	0.000
22-Sep-2015	10:10:27	0.000	0.000
22-Sep-2015	10:14:27	0.000	0.000
22-Sep-2015	10:18:27	0.000	0.000
22-Sep-2015	10:22:27	0.000	0.000
22-Sep-2015	10:26:27	0.000	0.000
22-Sep-2015	10:30:27	0.000	0.003
22-Sep-2015	10:34:27	0.008	0.017
22-Sep-2015	10:38:27	0.044	0.017
22-Sep-2015	10:42:27	0.000	0.015
22-Sep-2015	10:46:27	0.000	0.002
22-Sep-2015	10:50:27	0.006	0.028
22-Sep-2015	10:54:27	0.077	0.028
22-Sep-2015	10:58:27	0.000	0.026
22-Sep-2015	11:02:27	0.000	0.007
22-Sep-2015	11:06:27	0.022	0.007
22-Sep-2015	11:10:27	0.000	0.008
22-Sep-2015	11:14:27	0.001	0.002
22-Sep-2015	11:18:27	0.005	0.002
22-Sep-2015	11:22:27	0.000	0.002
22-Sep-2015	11:26:27	0.000	0.000
22-Sep-2015	11:30:27	0.000	0.000
22-Sep-2015	11:34:27	0.000	0.000
22-Sep-2015	11:38:27	0.000	0.000
22-Sep-2015	11:42:27	0.000	0.000
22-Sep-2015	11:46:27	0.000	0.000
22-Sep-2015	11:50:27	0.000	0.000
22-Sep-2015	11:54:27	0.000	0.003
22-Sep-2015	11:58:27	0.009	0.005
22-Sep-2015	12:02:27	0.006	0.032
22-Sep-2015	12:06:27	0.080	0.029

DUST MONITORING

September 2015

shading indicates values over the threshold

Monitor: 3

Threshold: 0.15 (mg/m^3)

Date	Time	Value (mg/m^3)	TWA (mg/m^3)
22-Sep-2015	12:10:27	0.000	0.027
22-Sep-2015	12:14:27	0.000	0.000
22-Sep-2015	12:18:27	0.000	0.000
22-Sep-2015	12:22:27	0.000	0.004
22-Sep-2015	12:26:27	0.011	0.004
22-Sep-2015	12:30:27	0.001	0.004
22-Sep-2015	12:34:27	0.000	0.000
22-Sep-2015	12:38:27	0.000	0.000
22-Sep-2015	12:42:27	0.000	0.000
22-Sep-2015	12:46:27	0.000	0.019
22-Sep-2015	12:50:27	0.057	0.019
22-Sep-2015	12:54:27	0.000	0.019
22-Sep-2015	12:58:27	0.000	0.000
22-Sep-2015	13:02:27	0.000	0.000
22-Sep-2015	13:06:27	0.000	0.000
22-Sep-2015	13:10:27	0.000	0.000
22-Sep-2015	13:14:27	0.000	0.000
22-Sep-2015	13:18:27	0.000	0.008
22-Sep-2015	13:22:27	0.025	0.008
22-Sep-2015	13:26:27	0.000	0.008
22-Sep-2015	13:30:27	0.000	0.000
22-Sep-2015	13:34:27	0.000	0.009
22-Sep-2015	13:38:27	0.026	0.009
22-Sep-2015	13:42:27	0.000	0.009
22-Sep-2015	13:46:27	0.000	0.027
22-Sep-2015	13:50:27	0.082	0.027
22-Sep-2015	13:54:27	0.000	0.028
22-Sep-2015	13:58:27	0.001	0.003
22-Sep-2015	14:02:27	0.008	0.023
22-Sep-2015	14:06:27	0.061	0.053
22-Sep-2015	14:10:27	0.091	0.052
22-Sep-2015	14:14:27	0.003	0.031
22-Sep-2015	14:18:27	0.000	0.001
22-Sep-2015	14:22:27	0.001	0.001
22-Sep-2015	14:26:27	0.002	0.001
22-Sep-2015	14:30:27	0.000	0.001
22-Sep-2015	14:34:27	0.000	0.000
22-Sep-2015	14:38:27	0.000	0.000
22-Sep-2015	14:42:27	0.000	0.002
22-Sep-2015	14:46:27	0.006	0.018
22-Sep-2015	14:50:27	0.047	0.018

DUST MONITORING

September 2015

shading indicates values over the threshold

Monitor: 3

Threshold: 0.15 (mg/m^3)

Date	Time	Value (mg/m^3)	TWA (mg/m^3)
22-Sep-2015	14:54:27	0.000	0.016
22-Sep-2015	14:58:27	0.000	0.000
22-Sep-2015	15:02:27	0.000	0.001
22-Sep-2015	15:06:27	0.004	0.028
22-Sep-2015	15:10:27	0.081	0.036
22-Sep-2015	15:14:27	0.023	0.053
22-Sep-2015	15:18:27	0.056	0.037
22-Sep-2015	15:22:27	0.032	0.031
22-Sep-2015	15:26:27	0.005	0.027
22-Sep-2015	15:30:27	0.043	0.016
22-Sep-2015	15:34:27	0.001	0.040
22-Sep-2015	15:38:27	0.076	0.030
22-Sep-2015	15:42:27	0.013	0.030
22-Sep-2015	15:46:27	0.000	0.004
22-Sep-2015	15:50:27	0.000	0.009
22-Sep-2015	15:54:27	0.027	0.009
22-Sep-2015	15:58:27	0.000	0.009
22-Sep-2015	16:02:27	0.001	0.013
22-Sep-2015	16:06:27	0.037	0.019
23-Sep-2015	08:33:11	0.000	0.000
23-Sep-2015	08:37:11	0.000	0.000
23-Sep-2015	08:41:11	0.000	0.000
23-Sep-2015	08:45:11	0.000	0.000
23-Sep-2015	08:49:11	0.000	0.000
23-Sep-2015	08:53:11	0.000	0.000
23-Sep-2015	08:57:11	0.000	0.000
23-Sep-2015	09:01:11	0.000	0.000
23-Sep-2015	09:05:11	0.000	0.000
23-Sep-2015	09:09:11	0.000	0.000
23-Sep-2015	09:13:11	0.000	0.000
23-Sep-2015	09:17:11	0.001	0.001
23-Sep-2015	09:21:11	0.001	0.001
23-Sep-2015	09:25:11	0.002	0.002
23-Sep-2015	09:29:11	0.003	0.002
23-Sep-2015	09:33:11	0.000	0.004
23-Sep-2015	09:37:11	0.008	0.003
23-Sep-2015	09:41:11	0.000	0.004
23-Sep-2015	09:45:11	0.004	0.002
23-Sep-2015	09:49:11	0.003	0.003
23-Sep-2015	09:53:11	0.002	0.002
23-Sep-2015	09:57:11	0.000	0.001

DUST MONITORING

September 2015

shading indicates values over the threshold

Monitor: 3

Threshold: 0.15 (mg/m^3)

Date	Time	Value (mg/m^3)	TWA (mg/m^3)
23-Sep-2015	10:01:11	0.000	0.001
23-Sep-2015	10:05:11	0.003	0.002
23-Sep-2015	10:09:11	0.002	0.002
23-Sep-2015	10:13:11	0.001	0.001
23-Sep-2015	10:17:11	0.000	0.001
23-Sep-2015	10:21:11	0.001	0.002
23-Sep-2015	10:25:11	0.004	0.002
23-Sep-2015	10:29:11	0.000	0.002
23-Sep-2015	10:33:11	0.001	0.000
23-Sep-2015	10:37:11	0.000	0.001
23-Sep-2015	10:41:11	0.001	0.001
23-Sep-2015	10:45:11	0.001	0.001
23-Sep-2015	10:49:11	0.000	0.000
23-Sep-2015	10:53:11	0.000	0.001
23-Sep-2015	10:57:11	0.002	0.001
23-Sep-2015	11:01:11	0.000	0.003
23-Sep-2015	11:05:11	0.006	0.002
23-Sep-2015	11:09:11	0.000	0.002
23-Sep-2015	11:13:11	0.001	0.003
23-Sep-2015	11:17:11	0.009	0.003
23-Sep-2015	11:21:11	0.000	0.003
23-Sep-2015	11:25:11	0.001	0.000
23-Sep-2015	11:29:11	0.000	0.000
23-Sep-2015	11:33:11	0.000	0.000
23-Sep-2015	11:37:11	0.000	0.000
23-Sep-2015	11:41:11	0.000	0.000
23-Sep-2015	11:45:11	0.000	0.000
23-Sep-2015	11:49:11	0.000	0.000
23-Sep-2015	11:53:11	0.000	0.000
23-Sep-2015	11:57:11	0.000	0.000
23-Sep-2015	12:01:11	0.000	0.000
23-Sep-2015	12:05:11	0.000	0.000
23-Sep-2015	12:09:11	0.000	0.005
23-Sep-2015	12:13:11	0.016	0.006
23-Sep-2015	12:17:11	0.001	0.007
23-Sep-2015	12:21:11	0.003	0.011
23-Sep-2015	12:25:11	0.030	0.016
23-Sep-2015	12:29:11	0.014	0.015
23-Sep-2015	12:33:11	0.000	0.016
23-Sep-2015	12:37:11	0.034	0.015
23-Sep-2015	12:41:11	0.011	0.021

DUST MONITORING

September 2015

shading indicates values over the threshold

Monitor: 3

Threshold: 0.15 (mg/m^3)

Date	Time	Value (mg/m^3)	TWA (mg/m^3)
23-Sep-2015	12:45:11	0.017	0.041
23-Sep-2015	12:49:11	0.096	0.039
23-Sep-2015	12:53:11	0.003	0.033
23-Sep-2015	12:57:11	0.000	0.011
23-Sep-2015	13:01:11	0.031	0.016
23-Sep-2015	13:05:11	0.018	0.043
23-Sep-2015	13:09:11	0.081	0.039
23-Sep-2015	13:13:11	0.019	0.035
23-Sep-2015	13:17:11	0.004	0.024
23-Sep-2015	13:21:11	0.049	0.032
23-Sep-2015	13:25:11	0.044	0.031
23-Sep-2015	13:29:11	0.000	0.015
23-Sep-2015	13:33:11	0.002	0.002
23-Sep-2015	13:37:11	0.005	0.002
23-Sep-2015	13:41:11	0.000	0.002
23-Sep-2015	13:45:11	0.000	0.020
23-Sep-2015	13:49:11	0.060	0.021
23-Sep-2015	13:53:11	0.002	0.030
23-Sep-2015	13:57:11	0.027	0.016
23-Sep-2015	14:01:11	0.018	0.015
23-Sep-2015	14:05:11	0.000	0.006
23-Sep-2015	14:09:11	0.000	0.001
23-Sep-2015	14:13:11	0.002	0.001
23-Sep-2015	14:17:11	0.002	0.040
23-Sep-2015	14:21:11	0.116	0.039
23-Sep-2015	14:25:11	0.000	0.039
23-Sep-2015	14:29:11	0.000	0.000
23-Sep-2015	14:33:11	0.000	0.002
23-Sep-2015	14:37:11	0.007	0.004
24-Sep-2015	08:17:56	0.000	0.000
24-Sep-2015	08:21:56	0.000	0.000
24-Sep-2015	08:25:56	0.000	0.002
24-Sep-2015	08:29:56	0.005	0.002
24-Sep-2015	08:33:56	0.000	0.002
24-Sep-2015	08:37:56	0.000	0.000
24-Sep-2015	08:41:56	0.000	0.000
24-Sep-2015	08:45:56	0.000	0.003
24-Sep-2015	08:49:56	0.008	0.006
24-Sep-2015	08:53:56	0.010	0.006
24-Sep-2015	08:57:56	0.000	0.003
24-Sep-2015	09:01:56	0.000	0.000

DUST MONITORING

September 2015

shading indicates values over the threshold

Monitor: 3

Threshold: 0.15 (mg/m^3)

Date	Time	Value (mg/m^3)	TWA (mg/m^3)
24-Sep-2015	09:05:56	0.000	0.000
24-Sep-2015	09:09:56	0.000	0.001
24-Sep-2015	09:13:56	0.003	0.001
24-Sep-2015	09:17:56	0.000	0.001
24-Sep-2015	09:21:56	0.000	0.004
24-Sep-2015	09:25:56	0.012	0.004
24-Sep-2015	09:29:56	0.000	0.004
24-Sep-2015	09:33:56	0.000	0.000
24-Sep-2015	09:37:56	0.000	0.000
24-Sep-2015	09:41:56	0.000	0.000
24-Sep-2015	09:45:56	0.000	0.000
24-Sep-2015	09:49:56	0.000	0.000
24-Sep-2015	09:53:56	0.000	0.001
24-Sep-2015	09:57:56	0.003	0.001
24-Sep-2015	10:01:56	0.000	0.002
24-Sep-2015	10:05:56	0.002	0.003
24-Sep-2015	10:09:56	0.007	0.003
24-Sep-2015	10:13:56	0.001	0.003
24-Sep-2015	10:17:56	0.000	0.000
24-Sep-2015	10:21:56	0.000	0.003
24-Sep-2015	10:25:56	0.010	0.004
24-Sep-2015	10:29:56	0.001	0.005
24-Sep-2015	10:33:56	0.003	0.003
24-Sep-2015	10:37:56	0.006	0.004
24-Sep-2015	10:41:56	0.002	0.003
24-Sep-2015	10:45:56	0.000	0.001
24-Sep-2015	10:49:56	0.002	0.001
24-Sep-2015	10:53:56	0.000	0.001
24-Sep-2015	10:57:56	0.000	0.000
24-Sep-2015	11:01:56	0.000	0.000
24-Sep-2015	11:05:56	0.000	0.001
24-Sep-2015	11:09:56	0.002	0.001
24-Sep-2015	11:13:56	0.000	0.001
24-Sep-2015	11:17:56	0.000	0.000
24-Sep-2015	11:21:56	0.000	0.000
24-Sep-2015	11:25:56	0.000	0.000
24-Sep-2015	11:29:56	0.000	0.000
24-Sep-2015	11:33:56	0.000	0.000
24-Sep-2015	11:37:56	0.000	0.000
24-Sep-2015	11:41:56	0.000	0.000
24-Sep-2015	11:45:56	0.001	0.000

DUST MONITORING

September 2015

shading indicates values over the threshold

Monitor: 3

Threshold: 0.15 (mg/m^3)

Date	Time	Value (mg/m^3)	TWA (mg/m^3)
24-Sep-2015	11:49:56	0.000	0.000
24-Sep-2015	11:53:56	0.000	0.000
24-Sep-2015	11:57:56	0.000	0.002
24-Sep-2015	12:01:56	0.005	0.002
24-Sep-2015	12:05:56	0.000	0.002
24-Sep-2015	12:09:56	0.000	0.000
24-Sep-2015	12:13:56	0.001	0.000
24-Sep-2015	12:17:56	0.000	0.006
24-Sep-2015	12:21:56	0.016	0.005
24-Sep-2015	12:25:56	0.000	0.005
24-Sep-2015	12:29:56	0.000	0.002
24-Sep-2015	12:33:56	0.007	0.030
24-Sep-2015	12:37:56	0.082	0.035
24-Sep-2015	12:41:56	0.017	0.034
24-Sep-2015	12:45:56	0.004	0.007
24-Sep-2015	12:49:56	0.000	0.001
24-Sep-2015	12:53:56	0.000	0.000
24-Sep-2015	12:57:56	0.001	0.000
24-Sep-2015	13:01:56	0.000	0.003
24-Sep-2015	13:05:56	0.008	0.003
24-Sep-2015	13:09:56	0.000	0.013
24-Sep-2015	13:13:56	0.030	0.010
24-Sep-2015	13:17:56	0.001	0.010
24-Sep-2015	13:21:56	0.000	0.000
24-Sep-2015	13:25:56	0.000	0.000
24-Sep-2015	13:29:56	0.000	0.000
24-Sep-2015	13:33:56	0.000	0.007
24-Sep-2015	13:37:56	0.021	0.018
24-Sep-2015	13:41:56	0.033	0.018
24-Sep-2015	13:45:56	0.000	0.011
24-Sep-2015	13:49:56	0.001	0.001
24-Sep-2015	13:53:56	0.001	0.006
24-Sep-2015	13:57:56	0.015	0.005
24-Sep-2015	14:01:56	0.000	0.010
24-Sep-2015	14:05:56	0.015	0.038
24-Sep-2015	14:09:56	0.099	0.040
24-Sep-2015	14:13:56	0.005	0.045
24-Sep-2015	14:17:56	0.032	0.041
24-Sep-2015	14:21:56	0.086	0.055
24-Sep-2015	14:25:56	0.047	0.072
24-Sep-2015	14:29:56	0.084	0.045

DUST MONITORING

September 2015

shading indicates values over the threshold

Monitor: 3

Threshold: 0.15 (mg/m^3)

Date	Time	Value (mg/m^3)	TWA (mg/m^3)
24-Sep-2015	14:33:56	0.003	0.043
24-Sep-2015	14:37:56	0.042	0.017
24-Sep-2015	14:41:56	0.007	0.031
24-Sep-2015	14:45:56	0.044	0.017
24-Sep-2015	14:49:56	0.000	0.015
24-Sep-2015	14:53:56	0.001	0.017
24-Sep-2015	14:57:56	0.050	0.018
24-Sep-2015	15:01:56	0.002	0.022
24-Sep-2015	15:05:56	0.014	0.016
24-Sep-2015	15:09:56	0.033	0.016
24-Sep-2015	15:13:56	0.000	0.015
24-Sep-2015	15:17:56	0.012	0.006
30-Sep-2015	07:27:16	0.008	0.004
30-Sep-2015	07:31:16	0.000	0.003
30-Sep-2015	07:35:16	0.000	0.000
30-Sep-2015	07:39:16	0.000	0.000
30-Sep-2015	07:43:16	0.000	0.000
30-Sep-2015	07:47:16	0.000	0.000
30-Sep-2015	07:51:16	0.000	0.000
30-Sep-2015	07:55:16	0.000	0.003
30-Sep-2015	07:59:16	0.008	0.003
30-Sep-2015	08:03:16	0.000	0.003
30-Sep-2015	08:07:16	0.001	0.002
30-Sep-2015	08:11:16	0.005	0.002
30-Sep-2015	08:15:16	0.000	0.003
30-Sep-2015	08:19:16	0.003	0.001
30-Sep-2015	08:23:16	0.000	0.001
30-Sep-2015	08:27:16	0.000	0.000
30-Sep-2015	08:31:16	0.000	0.001
30-Sep-2015	08:35:16	0.002	0.003
30-Sep-2015	08:39:16	0.007	0.003
30-Sep-2015	08:43:16	0.000	0.004
30-Sep-2015	08:47:16	0.005	0.002
30-Sep-2015	08:51:16	0.001	0.002
30-Sep-2015	08:55:16	0.000	0.001
30-Sep-2015	08:59:16	0.001	0.000
30-Sep-2015	09:03:16	0.000	0.000
30-Sep-2015	09:07:16	0.000	0.004
30-Sep-2015	09:11:16	0.011	0.005
30-Sep-2015	09:15:16	0.005	0.009
30-Sep-2015	09:19:16	0.012	0.006

DUST MONITORING

September 2015

shading indicates values over the threshold

Monitor: 3

Threshold: 0.15 (mg/m^3)

Date	Time	Value (mg/m^3)	TWA (mg/m^3)
30-Sep-2015	09:23:16	0.000	0.004
30-Sep-2015	09:27:16	0.000	0.001
30-Sep-2015	09:31:16	0.003	0.002
30-Sep-2015	09:35:16	0.004	0.002
30-Sep-2015	09:39:16	0.000	0.019
30-Sep-2015	09:43:16	0.052	0.017
30-Sep-2015	09:47:16	0.000	0.017
30-Sep-2015	09:51:16	0.000	0.002
30-Sep-2015	09:55:16	0.007	0.002
30-Sep-2015	09:59:16	0.000	0.002
30-Sep-2015	10:03:16	0.000	0.000
30-Sep-2015	10:07:16	0.000	0.000
30-Sep-2015	10:11:16	0.000	0.000
30-Sep-2015	10:15:16	0.000	0.000
30-Sep-2015	10:19:16	0.000	0.000
30-Sep-2015	10:23:16	0.000	0.001
30-Sep-2015	10:27:16	0.003	0.001
30-Sep-2015	10:31:16	0.000	0.001
30-Sep-2015	10:35:16	0.000	0.000
30-Sep-2015	10:39:16	0.000	0.000
30-Sep-2015	10:43:16	0.000	0.000
30-Sep-2015	10:47:16	0.000	0.000
30-Sep-2015	10:51:16	0.000	0.004
30-Sep-2015	10:55:16	0.013	0.004
30-Sep-2015	10:59:16	0.000	0.004
30-Sep-2015	11:03:16	0.000	0.007
30-Sep-2015	11:07:16	0.022	0.007
30-Sep-2015	11:11:16	0.000	0.075
30-Sep-2015	11:15:16	0.203	0.073
30-Sep-2015	11:19:16	0.015	0.075
30-Sep-2015	11:23:16	0.008	0.008
30-Sep-2015	11:27:16	0.000	0.003
30-Sep-2015	11:31:16	0.000	0.005
30-Sep-2015	11:35:16	0.016	0.005
30-Sep-2015	11:39:16	0.000	0.005
30-Sep-2015	11:43:16	0.000	0.000
30-Sep-2015	11:47:16	0.000	0.015
30-Sep-2015	11:51:16	0.045	0.015
30-Sep-2015	11:55:16	0.000	0.025
30-Sep-2015	11:59:16	0.029	0.016
30-Sep-2015	12:03:16	0.019	0.016

DUST MONITORING

September 2015

shading indicates values over the threshold

Monitor: 3

Threshold: 0.15 (mg/m^3)

Date	Time	Value (mg/m^3)	TWA (mg/m^3)
30-Sep-2015	12:07:16	0.000	0.006
30-Sep-2015	12:11:16	0.000	0.007
30-Sep-2015	12:15:16	0.021	0.007
30-Sep-2015	12:19:16	0.000	0.007
30-Sep-2015	12:23:16	0.000	0.007
30-Sep-2015	12:27:16	0.022	0.008
30-Sep-2015	12:31:16	0.001	0.008
30-Sep-2015	12:35:16	0.000	0.000
30-Sep-2015	12:39:16	0.000	0.000
30-Sep-2015	12:43:16	0.000	0.002
30-Sep-2015	12:47:16	0.005	0.046
30-Sep-2015	12:51:16	0.133	0.048
30-Sep-2015	12:55:16	0.006	0.057
30-Sep-2015	12:59:16	0.032	0.013
30-Sep-2015	13:03:16	0.000	0.011
30-Sep-2015	13:07:16	0.000	0.007
30-Sep-2015	13:11:16	0.021	0.007
30-Sep-2015	13:15:16	0.000	0.007
30-Sep-2015	13:19:16	0.000	0.008
30-Sep-2015	13:23:16	0.024	0.008
30-Sep-2015	13:27:16	0.000	0.008
30-Sep-2015	13:31:16	0.000	0.000
30-Sep-2015	13:35:16	0.000	0.037
30-Sep-2015	13:39:16	0.110	0.043
30-Sep-2015	13:43:16	0.019	0.043
30-Sep-2015	13:47:16	0.000	0.018
30-Sep-2015	13:51:16	0.036	0.015
30-Sep-2015	13:55:16	0.009	0.025
30-Sep-2015	13:59:16	0.031	0.013
30-Sep-2015	14:03:16	0.000	0.010
30-Sep-2015	14:07:16	0.000	0.005
30-Sep-2015	14:11:16	0.016	0.005
30-Sep-2015	14:15:16	0.000	0.006
30-Sep-2015	14:19:16	0.001	0.001
30-Sep-2015	14:23:16	0.001	0.001
30-Sep-2015	14:27:16	0.000	0.021
30-Sep-2015	14:31:16	0.063	0.021
30-Sep-2015	14:35:16	0.000	0.021
30-Sep-2015	14:39:16	0.000	0.000
30-Sep-2015	14:43:16	0.001	0.001
30-Sep-2015	14:47:16	0.002	0.001

DUST MONITORING

September 2015

shading indicates values over the threshold

Monitor: 3

Threshold: 0.15 (mg/m^3)

Date	Time	Value (mg/m^3)	TWA (mg/m^3)
30-Sep-2015	14:51:16	0.000	0.001
30-Sep-2015	14:55:16	0.000	0.000
30-Sep-2015	14:59:16	0.000	0.005
30-Sep-2015	15:03:16	0.014	0.005
30-Sep-2015	15:07:16	0.000	0.013
30-Sep-2015	15:11:16	0.024	0.012

DUST MONITORING

October 2015

shading indicates values over the threshold

Monitor: 1

Threshold: 0.15 (mg/m^3)

Date	Time	Value (mg/m^3)	TWA (mg/m^3)
5-Oct-2015	07:22:20	0.000	0.000
5-Oct-2015	07:26:20	0.000	0.000
5-Oct-2015	07:30:20	0.000	0.000
5-Oct-2015	07:34:20	0.000	0.000
5-Oct-2015	07:38:20	0.000	0.000
5-Oct-2015	07:42:20	0.000	0.000
5-Oct-2015	07:46:20	0.000	0.000
5-Oct-2015	07:50:20	0.000	0.000
5-Oct-2015	07:54:20	0.000	0.000
5-Oct-2015	07:58:20	0.000	0.000
5-Oct-2015	08:02:20	0.001	0.000
5-Oct-2015	08:06:20	0.000	0.000
5-Oct-2015	08:10:20	0.000	0.000
5-Oct-2015	08:14:20	0.000	0.000
5-Oct-2015	08:18:20	0.000	0.000
5-Oct-2015	08:22:20	0.000	0.000
5-Oct-2015	08:26:20	0.000	0.000
5-Oct-2015	08:30:20	0.000	0.000
5-Oct-2015	08:34:20	0.000	0.000
5-Oct-2015	08:38:20	0.000	0.000
5-Oct-2015	08:42:20	0.001	0.001
5-Oct-2015	08:46:20	0.002	0.001
5-Oct-2015	08:50:20	0.000	0.001
5-Oct-2015	08:54:20	0.000	0.000
5-Oct-2015	08:58:20	0.000	0.000
5-Oct-2015	09:02:20	0.000	0.000
5-Oct-2015	09:06:20	0.000	0.000
5-Oct-2015	09:10:20	0.000	0.000
5-Oct-2015	09:14:20	0.000	0.000
5-Oct-2015	09:18:20	0.000	0.000
5-Oct-2015	09:22:20	0.000	0.000
5-Oct-2015	09:26:20	0.000	0.000
5-Oct-2015	09:30:20	0.000	0.003
5-Oct-2015	09:34:20	0.008	0.003
5-Oct-2015	09:38:20	0.002	0.003
5-Oct-2015	09:42:20	0.000	0.001
5-Oct-2015	09:46:20	0.000	0.000
5-Oct-2015	09:50:20	0.000	0.000
5-Oct-2015	09:54:20	0.000	0.000
5-Oct-2015	09:58:20	0.000	0.000
5-Oct-2015	10:02:20	0.000	0.000

DUST MONITORING

October 2015

shading indicates values over the threshold

Monitor: 1

Threshold: 0.15 (mg/m^3)

Date	Time	Value (mg/m^3)	TWA (mg/m^3)
5-Oct-2015	10:06:20	0.000	0.000
5-Oct-2015	10:10:20	0.000	0.000
5-Oct-2015	10:14:20	0.000	0.000
5-Oct-2015	10:18:20	0.000	0.000
5-Oct-2015	10:22:20	0.000	0.000
5-Oct-2015	10:26:20	0.000	0.000
5-Oct-2015	10:30:20	0.000	0.000
5-Oct-2015	10:34:20	0.000	0.000
5-Oct-2015	10:38:20	0.000	0.000
5-Oct-2015	10:42:20	0.000	0.000
5-Oct-2015	10:46:20	0.000	0.000
5-Oct-2015	10:50:20	0.000	0.000
5-Oct-2015	10:54:20	0.000	0.000
5-Oct-2015	10:58:20	0.000	0.000
5-Oct-2015	11:02:20	0.000	0.000
5-Oct-2015	11:06:20	0.000	0.000
5-Oct-2015	11:10:20	0.000	0.000
5-Oct-2015	11:14:20	0.000	0.000
5-Oct-2015	11:18:20	0.000	0.000
5-Oct-2015	11:22:20	0.000	0.000
5-Oct-2015	11:26:20	0.000	0.000
5-Oct-2015	11:30:20	0.000	0.000
5-Oct-2015	11:34:20	0.000	0.000
5-Oct-2015	11:38:20	0.000	0.000
5-Oct-2015	11:42:20	0.000	0.000
5-Oct-2015	11:46:20	0.000	0.000
5-Oct-2015	11:50:20	0.000	0.000
5-Oct-2015	11:54:20	0.000	0.000
5-Oct-2015	11:58:20	0.000	0.000
5-Oct-2015	12:02:20	0.000	0.000
5-Oct-2015	12:06:20	0.000	0.000
5-Oct-2015	12:10:20	0.000	0.000
5-Oct-2015	12:14:20	0.000	0.000
5-Oct-2015	12:18:20	0.000	0.000
5-Oct-2015	12:22:20	0.000	0.000
5-Oct-2015	12:26:20	0.000	0.000
5-Oct-2015	12:30:20	0.000	0.000
5-Oct-2015	12:34:20	0.000	0.000
5-Oct-2015	12:38:20	0.000	0.000
5-Oct-2015	12:42:20	0.000	0.000
5-Oct-2015	12:46:20	0.000	0.000

DUST MONITORING

October 2015

shading indicates values over the threshold

Monitor: 1

Threshold: 0.15 (mg/m^3)

Date	Time	Value (mg/m^3)	TWA (mg/m^3)
5-Oct-2015	12:50:20	0.000	0.000
5-Oct-2015	12:54:20	0.000	0.000
5-Oct-2015	12:58:20	0.000	0.000
5-Oct-2015	13:02:20	0.000	0.000
5-Oct-2015	13:06:20	0.000	0.000
5-Oct-2015	13:10:20	0.000	0.000
5-Oct-2015	13:14:20	0.000	0.000
5-Oct-2015	13:18:20	0.000	0.000
5-Oct-2015	13:22:20	0.000	0.000
5-Oct-2015	13:26:20	0.000	0.000
5-Oct-2015	13:30:20	0.000	0.000
5-Oct-2015	13:34:20	0.000	0.000
5-Oct-2015	13:38:20	0.001	0.000
5-Oct-2015	13:42:20	0.000	0.000
5-Oct-2015	13:46:20	0.000	0.000
5-Oct-2015	13:50:20	0.000	0.000
5-Oct-2015	13:54:20	0.000	0.000
5-Oct-2015	13:58:20	0.000	0.000
5-Oct-2015	14:02:20	0.000	0.000
5-Oct-2015	14:06:20	0.000	0.000
5-Oct-2015	14:10:20	0.000	0.000
5-Oct-2015	14:14:20	0.000	0.000
5-Oct-2015	14:18:20	0.000	0.000
5-Oct-2015	14:22:20	0.000	0.000
5-Oct-2015	14:26:20	0.000	0.000
5-Oct-2015	14:30:20	0.000	0.000
5-Oct-2015	14:34:20	0.001	0.000
5-Oct-2015	14:38:20	0.000	0.002
5-Oct-2015	14:42:20	0.005	0.003
5-Oct-2015	14:46:20	0.005	0.003
5-Oct-2015	14:50:20	0.000	0.002
5-Oct-2015	14:54:20	0.000	0.000
5-Oct-2015	14:58:20	0.000	0.000
5-Oct-2015	15:02:20	0.000	0.000
5-Oct-2015	15:06:20	0.000	0.000
5-Oct-2015	15:10:20	0.000	0.000
5-Oct-2015	15:14:20	0.000	0.000
5-Oct-2015	15:18:20	0.001	0.000
5-Oct-2015	15:22:20	0.000	0.000
5-Oct-2015	15:26:20	0.000	0.000
5-Oct-2015	15:30:20	0.000	0.000

DUST MONITORING

October 2015

shading indicates values over the threshold

Monitor: 1

Threshold: 0.15 (mg/m^3)

Date	Time	Value (mg/m^3)	TWA (mg/m^3)
5-Oct-2015	15:34:20	0.000	0.000
5-Oct-2015	15:38:20	0.000	0.000
5-Oct-2015	15:42:20	0.001	0.000
5-Oct-2015	15:46:20	0.000	0.001
6-Oct-2015	07:17:34	0.000	0.000
6-Oct-2015	07:21:34	0.000	0.000
6-Oct-2015	07:25:34	0.000	0.000
6-Oct-2015	07:29:34	0.000	0.000
6-Oct-2015	07:33:34	0.000	0.000
6-Oct-2015	07:37:34	0.000	0.000
6-Oct-2015	07:41:34	0.000	0.000
6-Oct-2015	07:45:34	0.000	0.000
6-Oct-2015	07:49:34	0.000	0.000
6-Oct-2015	07:53:34	0.000	0.000
6-Oct-2015	07:57:34	0.000	0.000
6-Oct-2015	08:01:34	0.000	0.000
6-Oct-2015	08:05:34	0.000	0.000
6-Oct-2015	08:09:34	0.000	0.000
6-Oct-2015	08:13:34	0.000	0.000
6-Oct-2015	08:17:34	0.000	0.000
6-Oct-2015	08:21:34	0.000	0.000
6-Oct-2015	08:25:34	0.000	0.000
6-Oct-2015	08:29:34	0.000	0.000
6-Oct-2015	08:33:34	0.000	0.000
6-Oct-2015	08:37:34	0.000	0.000
6-Oct-2015	08:41:34	0.000	0.000
6-Oct-2015	08:45:34	0.000	0.000
6-Oct-2015	08:49:34	0.000	0.000
6-Oct-2015	08:53:34	0.000	0.000
6-Oct-2015	08:57:34	0.000	0.000
6-Oct-2015	09:01:34	0.000	0.000
6-Oct-2015	09:05:34	0.000	0.000
6-Oct-2015	09:09:34	0.000	0.000
6-Oct-2015	09:13:34	0.000	0.000
6-Oct-2015	09:17:34	0.000	0.000
6-Oct-2015	09:21:34	0.000	0.000
6-Oct-2015	09:25:34	0.000	0.000
6-Oct-2015	09:29:34	0.000	0.000
6-Oct-2015	09:33:34	0.000	0.000
6-Oct-2015	09:37:34	0.000	0.000
6-Oct-2015	09:41:34	0.000	0.000

DUST MONITORING

October 2015

shading indicates values over the threshold

Monitor: 1

Threshold: 0.15 (mg/m^3)

Date	Time	Value (mg/m^3)	TWA (mg/m^3)
6-Oct-2015	09:45:34	0.000	0.000
6-Oct-2015	09:49:34	0.000	0.000
6-Oct-2015	09:53:34	0.000	0.000
6-Oct-2015	09:57:34	0.000	0.000
6-Oct-2015	10:01:34	0.000	0.000
6-Oct-2015	10:05:34	0.000	0.000
6-Oct-2015	10:09:34	0.000	0.000
6-Oct-2015	10:13:34	0.000	0.000
6-Oct-2015	10:17:34	0.000	0.000
6-Oct-2015	10:21:34	0.000	0.000
6-Oct-2015	10:25:34	0.000	0.000
6-Oct-2015	10:29:34	0.000	0.000
6-Oct-2015	10:33:34	0.000	0.000
6-Oct-2015	10:37:34	0.000	0.000
6-Oct-2015	10:41:34	0.000	0.000
6-Oct-2015	10:45:34	0.000	0.000
6-Oct-2015	10:49:34	0.000	0.000
6-Oct-2015	10:53:34	0.000	0.000
6-Oct-2015	10:57:34	0.000	0.000
6-Oct-2015	11:01:34	0.000	0.000
6-Oct-2015	11:05:34	0.000	0.000
6-Oct-2015	11:09:34	0.000	0.000
6-Oct-2015	11:13:34	0.000	0.000
6-Oct-2015	11:17:34	0.000	0.000
6-Oct-2015	11:21:34	0.000	0.000
6-Oct-2015	11:25:34	0.000	0.000
6-Oct-2015	11:29:34	0.000	0.000
6-Oct-2015	11:33:34	0.000	0.000
6-Oct-2015	11:37:34	0.000	0.000
6-Oct-2015	11:41:34	0.000	0.000
6-Oct-2015	11:45:34	0.000	0.000
6-Oct-2015	11:49:34	0.000	0.000
6-Oct-2015	11:53:34	0.000	0.000
6-Oct-2015	11:57:34	0.000	0.000
6-Oct-2015	12:01:34	0.000	0.000
6-Oct-2015	12:05:34	0.000	0.000
6-Oct-2015	12:09:34	0.000	0.000
6-Oct-2015	12:13:34	0.000	0.000
6-Oct-2015	12:17:34	0.000	0.000
6-Oct-2015	12:21:34	0.000	0.000
6-Oct-2015	12:25:34	0.000	0.000

DUST MONITORING

October 2015

shading indicates values over the threshold

Monitor: 1

Threshold: 0.15 (mg/m^3)

Date	Time	Value (mg/m^3)	TWA (mg/m^3)
6-Oct-2015	12:29:34	0.000	0.000
6-Oct-2015	12:33:34	0.000	0.000
6-Oct-2015	12:37:34	0.000	0.000
6-Oct-2015	12:41:34	0.000	0.000
6-Oct-2015	12:45:34	0.001	0.000
6-Oct-2015	12:49:34	0.000	0.000
6-Oct-2015	12:53:34	0.000	0.000
6-Oct-2015	12:57:34	0.000	0.000
6-Oct-2015	13:01:34	0.000	0.000
6-Oct-2015	13:05:34	0.000	0.000
6-Oct-2015	13:09:34	0.000	0.000
6-Oct-2015	13:13:34	0.000	0.000
6-Oct-2015	13:17:34	0.000	0.000
6-Oct-2015	13:21:34	0.000	0.001
6-Oct-2015	13:25:34	0.002	0.001
6-Oct-2015	13:29:34	0.000	0.001
6-Oct-2015	13:33:34	0.000	0.000
6-Oct-2015	13:37:34	0.000	0.000
6-Oct-2015	13:41:34	0.000	0.000
6-Oct-2015	13:45:34	0.000	0.000
6-Oct-2015	13:49:34	0.000	0.000
6-Oct-2015	13:53:34	0.000	0.002
6-Oct-2015	13:57:34	0.007	0.002
6-Oct-2015	14:01:34	0.000	0.003
6-Oct-2015	14:05:34	0.001	0.000
6-Oct-2015	14:09:34	0.000	0.000
6-Oct-2015	14:13:34	0.000	0.000
6-Oct-2015	14:17:34	0.001	0.000
6-Oct-2015	14:21:34	0.000	0.000
6-Oct-2015	14:25:34	0.000	0.000
6-Oct-2015	14:29:34	0.000	0.000
6-Oct-2015	14:33:34	0.000	0.000
6-Oct-2015	14:37:34	0.000	0.000
6-Oct-2015	14:41:34	0.000	0.000
6-Oct-2015	14:45:34	0.000	0.002
6-Oct-2015	14:49:34	0.006	0.005
6-Oct-2015	14:53:34	0.010	0.012
6-Oct-2015	14:57:34	0.021	0.010
6-Oct-2015	15:01:34	0.000	0.008
6-Oct-2015	15:05:34	0.004	0.002
6-Oct-2015	15:09:34	0.002	0.009

DUST MONITORING

October 2015

shading indicates values over the threshold

Monitor: 1

Threshold: 0.15 (mg/m^3)

Date	Time	Value (mg/m^3)	TWA (mg/m^3)
6-Oct-2015	15:13:34	0.022	0.009
6-Oct-2015	15:17:34	0.002	0.023
6-Oct-2015	15:21:34	0.046	0.017
6-Oct-2015	15:25:34	0.002	0.026
6-Oct-2015	15:29:34	0.029	0.032
6-Oct-2015	15:33:34	0.065	0.031
6-Oct-2015	15:37:34	0.000	0.022
6-Oct-2015	15:41:34	0.000	0.000
7-Oct-2015	09:02:41	0.002	0.001
7-Oct-2015	09:06:41	0.000	0.001
7-Oct-2015	09:10:41	0.000	0.000
7-Oct-2015	09:14:41	0.000	0.000
7-Oct-2015	09:18:41	0.000	0.000
7-Oct-2015	09:22:41	0.000	0.008
7-Oct-2015	09:26:41	0.024	0.008
7-Oct-2015	09:30:41	0.000	0.008
7-Oct-2015	09:34:41	0.000	0.000
7-Oct-2015	09:38:41	0.000	0.000
7-Oct-2015	09:42:41	0.000	0.000
7-Oct-2015	09:46:41	0.000	0.000
7-Oct-2015	09:50:41	0.000	0.000
7-Oct-2015	09:54:41	0.000	0.000
7-Oct-2015	09:58:41	0.000	0.000
7-Oct-2015	10:02:41	0.000	0.000
7-Oct-2015	10:06:41	0.000	0.000
7-Oct-2015	10:10:41	0.000	0.000
7-Oct-2015	10:14:41	0.000	0.000
7-Oct-2015	10:18:41	0.000	0.000
7-Oct-2015	10:22:41	0.000	0.000
7-Oct-2015	10:26:41	0.000	0.000
7-Oct-2015	10:30:41	0.000	0.000
7-Oct-2015	10:34:41	0.000	0.000
7-Oct-2015	10:38:41	0.000	0.000
7-Oct-2015	10:42:41	0.000	0.000
7-Oct-2015	10:46:41	0.000	0.000
7-Oct-2015	10:50:41	0.000	0.000
7-Oct-2015	10:54:41	0.000	0.000
7-Oct-2015	10:58:41	0.000	0.000
7-Oct-2015	11:02:41	0.000	0.000
7-Oct-2015	11:06:41	0.000	0.000
7-Oct-2015	11:10:41	0.000	0.000

DUST MONITORING

October 2015

shading indicates values over the threshold

Monitor: 1

Threshold: 0.15 (mg/m^3)

Date	Time	Value (mg/m^3)	TWA (mg/m^3)
7-Oct-2015	11:14:41	0.000	0.000
7-Oct-2015	11:18:41	0.000	0.000
7-Oct-2015	11:22:41	0.000	0.000
7-Oct-2015	11:26:41	0.000	0.000
7-Oct-2015	11:30:41	0.000	0.000
7-Oct-2015	11:34:41	0.000	0.000
7-Oct-2015	11:38:41	0.000	0.000
7-Oct-2015	11:42:41	0.000	0.000
7-Oct-2015	11:46:41	0.000	0.000
7-Oct-2015	11:50:41	0.000	0.000
7-Oct-2015	11:54:41	0.000	0.000
7-Oct-2015	11:58:41	0.000	0.000
7-Oct-2015	12:02:41	0.000	0.000
7-Oct-2015	12:06:41	0.000	0.003
7-Oct-2015	12:10:41	0.009	0.003
7-Oct-2015	12:14:41	0.000	0.003
7-Oct-2015	12:18:41	0.000	0.000
7-Oct-2015	12:22:41	0.000	0.000
7-Oct-2015	12:26:41	0.000	0.000
7-Oct-2015	12:30:41	0.000	0.000
7-Oct-2015	12:34:41	0.000	0.000
7-Oct-2015	12:38:41	0.000	0.000
7-Oct-2015	12:42:41	0.000	0.000
7-Oct-2015	12:46:41	0.000	0.000
7-Oct-2015	12:50:41	0.000	0.000
7-Oct-2015	12:54:41	0.001	0.010
7-Oct-2015	12:58:41	0.030	0.014
7-Oct-2015	13:02:41	0.011	0.014
7-Oct-2015	13:06:41	0.000	0.004
7-Oct-2015	13:10:41	0.000	0.000
7-Oct-2015	13:14:41	0.000	0.000
7-Oct-2015	13:18:41	0.001	0.000
7-Oct-2015	13:22:41	0.000	0.000
7-Oct-2015	13:26:41	0.000	0.000
7-Oct-2015	13:30:41	0.000	0.000
7-Oct-2015	13:34:41	0.000	0.000
7-Oct-2015	13:38:41	0.000	0.000
7-Oct-2015	13:42:41	0.000	0.000
7-Oct-2015	13:46:41	0.000	0.000
7-Oct-2015	13:50:41	0.000	0.000
7-Oct-2015	13:54:41	0.000	0.000

DUST MONITORING

October 2015

shading indicates values over the threshold

Monitor: 1

Threshold: 0.15 (mg/m^3)

Date	Time	Value (mg/m^3)	TWA (mg/m^3)
7-Oct-2015	13:58:41	0.001	0.000
7-Oct-2015	14:02:41	0.000	0.000
7-Oct-2015	14:06:41	0.000	0.000
7-Oct-2015	14:10:41	0.000	0.000
7-Oct-2015	14:14:41	0.000	0.000
7-Oct-2015	14:18:41	0.000	0.000
7-Oct-2015	14:22:41	0.000	0.000
7-Oct-2015	14:26:41	0.001	0.000
7-Oct-2015	14:30:41	0.000	0.000
7-Oct-2015	14:34:41	0.000	0.000
7-Oct-2015	14:38:41	0.000	0.000
7-Oct-2015	14:42:41	0.000	0.000
7-Oct-2015	14:46:41	0.000	0.000
7-Oct-2015	14:50:41	0.000	0.000
7-Oct-2015	14:54:41	0.000	0.000
7-Oct-2015	14:58:41	0.000	0.000
7-Oct-2015	15:02:41	0.000	0.000
7-Oct-2015	15:06:41	0.000	0.000
7-Oct-2015	15:10:41	0.000	0.000
7-Oct-2015	15:14:41	0.000	0.000
7-Oct-2015	15:18:41	0.000	0.000
7-Oct-2015	15:22:41	0.001	0.001
7-Oct-2015	15:26:41	0.001	0.001
7-Oct-2015	15:30:41	0.001	0.001
7-Oct-2015	15:34:41	0.002	0.001
7-Oct-2015	15:38:41	0.000	0.001
7-Oct-2015	15:42:41	0.002	0.001
7-Oct-2015	15:46:41	0.001	0.001
7-Oct-2015	15:50:41	0.000	0.001
7-Oct-2015	15:54:41	0.002	0.001
7-Oct-2015	15:58:41	0.000	0.001
7-Oct-2015	16:02:41	0.000	0.000
7-Oct-2015	16:06:41	0.000	0.000
7-Oct-2015	16:10:41	0.001	0.001
8-Oct-2015	07:12:42	0.006	0.004
8-Oct-2015	07:16:42	0.001	0.002
8-Oct-2015	07:20:42	0.000	0.000
8-Oct-2015	07:24:42	0.000	0.000
8-Oct-2015	07:28:42	0.000	0.000
8-Oct-2015	07:32:42	0.000	0.000
8-Oct-2015	07:36:42	0.000	0.000

DUST MONITORING

October 2015

shading indicates values over the threshold

Monitor: 1

Threshold: 0.15 (mg/m^3)

Date	Time	Value (mg/m^3)	TWA (mg/m^3)
8-Oct-2015	07:40:42	0.000	0.000
8-Oct-2015	07:44:42	0.000	0.000
8-Oct-2015	07:48:42	0.000	0.000
8-Oct-2015	07:52:42	0.000	0.000
8-Oct-2015	07:56:42	0.000	0.000
8-Oct-2015	08:00:42	0.000	0.000
8-Oct-2015	08:04:42	0.000	0.000
8-Oct-2015	08:08:42	0.000	0.000
8-Oct-2015	08:12:42	0.000	0.000
8-Oct-2015	08:16:42	0.000	0.000
8-Oct-2015	08:20:42	0.000	0.000
8-Oct-2015	08:24:42	0.001	0.000
8-Oct-2015	08:28:42	0.000	0.000
8-Oct-2015	08:32:42	0.000	0.000
8-Oct-2015	08:36:42	0.000	0.000
8-Oct-2015	08:40:42	0.000	0.000
8-Oct-2015	08:44:42	0.000	0.000
8-Oct-2015	08:48:42	0.000	0.000
8-Oct-2015	08:52:42	0.000	0.000
8-Oct-2015	08:56:42	0.000	0.000
8-Oct-2015	09:00:42	0.000	0.000
8-Oct-2015	09:04:42	0.000	0.000
8-Oct-2015	09:08:42	0.000	0.000
8-Oct-2015	09:12:42	0.000	0.000
8-Oct-2015	09:16:42	0.000	0.000
8-Oct-2015	09:20:42	0.000	0.000
8-Oct-2015	09:24:42	0.000	0.000
8-Oct-2015	09:28:42	0.000	0.000
8-Oct-2015	09:32:42	0.000	0.000
8-Oct-2015	09:36:42	0.000	0.000
8-Oct-2015	09:40:42	0.000	0.000
8-Oct-2015	09:44:42	0.000	0.000
8-Oct-2015	09:48:42	0.000	0.000
8-Oct-2015	09:52:42	0.000	0.000
8-Oct-2015	09:56:42	0.000	0.000
8-Oct-2015	10:00:42	0.000	0.000
8-Oct-2015	10:04:42	0.000	0.000
8-Oct-2015	10:08:42	0.000	0.001
8-Oct-2015	10:12:42	0.002	0.001
8-Oct-2015	10:16:42	0.000	0.002
8-Oct-2015	10:20:42	0.005	0.002

DUST MONITORING

October 2015

shading indicates values over the threshold

Monitor: 1

Threshold: 0.15 (mg/m^3)

Date	Time	Value (mg/m^3)	TWA (mg/m^3)
8-Oct-2015	10:24:42	0.000	0.002
8-Oct-2015	10:28:42	0.000	0.000
8-Oct-2015	10:32:42	0.000	0.000
8-Oct-2015	10:36:42	0.000	0.000
8-Oct-2015	10:40:42	0.000	0.000
8-Oct-2015	10:44:42	0.001	0.000
8-Oct-2015	10:48:42	0.000	0.000
8-Oct-2015	10:52:42	0.000	0.000
8-Oct-2015	10:56:42	0.000	0.000
8-Oct-2015	11:00:42	0.000	0.000
8-Oct-2015	11:04:42	0.000	0.000
8-Oct-2015	11:08:42	0.000	0.000
8-Oct-2015	11:12:42	0.000	0.000
8-Oct-2015	11:16:42	0.000	0.000
8-Oct-2015	11:20:42	0.000	0.000
8-Oct-2015	11:24:42	0.000	0.000
8-Oct-2015	11:28:42	0.000	0.000
8-Oct-2015	11:32:42	0.000	0.000
8-Oct-2015	11:36:42	0.000	0.000
8-Oct-2015	11:40:42	0.000	0.000
8-Oct-2015	11:44:42	0.000	0.000
8-Oct-2015	11:48:42	0.000	0.000
8-Oct-2015	11:52:42	0.000	0.000
8-Oct-2015	11:56:42	0.001	0.000
8-Oct-2015	12:00:42	0.000	0.000
8-Oct-2015	12:04:42	0.000	0.000
8-Oct-2015	12:08:42	0.000	0.000
8-Oct-2015	12:12:42	0.000	0.000
8-Oct-2015	12:16:42	0.000	0.000
8-Oct-2015	12:20:42	0.000	0.000
8-Oct-2015	12:24:42	0.000	0.000
8-Oct-2015	12:28:42	0.000	0.000
8-Oct-2015	12:32:42	0.000	0.000
8-Oct-2015	12:36:42	0.000	0.000
8-Oct-2015	12:40:42	0.000	0.000
8-Oct-2015	12:44:42	0.000	0.000
8-Oct-2015	12:48:42	0.000	0.000
8-Oct-2015	12:52:42	0.000	0.000
8-Oct-2015	12:56:42	0.000	0.000
8-Oct-2015	13:00:42	0.000	0.000
8-Oct-2015	13:04:42	0.000	0.000

DUST MONITORING

October 2015

shading indicates values over the threshold

Monitor: 1

Threshold: 0.15 (mg/m^3)

Date	Time	Value (mg/m^3)	TWA (mg/m^3)
8-Oct-2015	13:08:42	0.000	0.000
8-Oct-2015	13:12:42	0.000	0.000
8-Oct-2015	13:16:42	0.000	0.000
8-Oct-2015	13:20:42	0.000	0.000
8-Oct-2015	13:24:42	0.000	0.001
8-Oct-2015	13:28:42	0.003	0.001
8-Oct-2015	13:32:42	0.000	0.001
8-Oct-2015	13:36:42	0.000	0.000
8-Oct-2015	13:40:42	0.000	0.000
8-Oct-2015	13:44:42	0.000	0.000
8-Oct-2015	13:48:42	0.000	0.000
8-Oct-2015	13:52:42	0.000	0.000
8-Oct-2015	13:56:42	0.000	0.000
8-Oct-2015	14:00:42	0.000	0.000
8-Oct-2015	14:04:42	0.000	0.000
8-Oct-2015	14:08:42	0.000	0.000
8-Oct-2015	14:12:42	0.000	0.001
8-Oct-2015	14:16:42	0.002	0.025
8-Oct-2015	14:20:42	0.074	0.037
8-Oct-2015	14:24:42	0.034	0.036
8-Oct-2015	14:28:42	0.000	0.011
8-Oct-2015	14:32:42	0.000	0.002
8-Oct-2015	14:36:42	0.005	0.004
8-Oct-2015	14:40:42	0.006	0.017
8-Oct-2015	14:44:42	0.040	0.022
8-Oct-2015	14:48:42	0.021	0.020
8-Oct-2015	14:52:42	0.000	0.007
8-Oct-2015	14:56:42	0.000	0.000
8-Oct-2015	15:00:42	0.001	0.000
8-Oct-2015	15:04:42	0.000	0.001
8-Oct-2015	15:08:42	0.001	0.000
8-Oct-2015	15:12:42	0.000	0.000
8-Oct-2015	15:16:42	0.000	0.000
8-Oct-2015	15:20:42	0.000	0.000
8-Oct-2015	15:24:42	0.000	0.000
8-Oct-2015	15:28:42	0.000	0.000
8-Oct-2015	15:32:42	0.000	0.000
8-Oct-2015	15:36:42	0.000	0.000
8-Oct-2015	15:40:42	0.000	0.000
8-Oct-2015	15:44:42	0.000	0.000
8-Oct-2015	15:48:42	0.000	0.003

DUST MONITORING

October 2015

shading indicates values over the threshold

Monitor: 1

Threshold: 0.15 (mg/m^3)

Date	Time	Value (mg/m^3)	TWA (mg/m^3)
8-Oct-2015	15:52:42	0.008	0.028
8-Oct-2015	15:56:42	0.077	0.028
8-Oct-2015	16:00:42	0.000	0.026
8-Oct-2015	16:04:42	0.000	0.000
8-Oct-2015	16:08:42	0.000	0.000
8-Oct-2015	16:12:42	0.000	0.001
8-Oct-2015	16:16:42	0.002	0.001
8-Oct-2015	16:20:42	0.001	0.002
12-Oct-2015	09:30:01	0.000	0.000
12-Oct-2015	09:34:01	0.000	0.000
12-Oct-2015	09:38:01	0.000	0.000
12-Oct-2015	09:42:01	0.000	0.000
12-Oct-2015	09:46:01	0.000	0.000
12-Oct-2015	09:50:01	0.000	0.000
12-Oct-2015	09:54:01	0.001	0.000
12-Oct-2015	09:58:01	0.000	0.001
12-Oct-2015	10:02:01	0.001	0.000
12-Oct-2015	10:06:01	0.000	0.000
12-Oct-2015	10:10:01	0.000	0.000
12-Oct-2015	10:14:01	0.000	0.000
12-Oct-2015	10:18:01	0.000	0.000
12-Oct-2015	10:22:01	0.000	0.000
12-Oct-2015	10:26:01	0.000	0.000
12-Oct-2015	10:30:01	0.000	0.000
12-Oct-2015	10:34:01	0.000	0.000
12-Oct-2015	10:38:01	0.001	0.000
12-Oct-2015	10:42:01	0.000	0.000
12-Oct-2015	10:46:01	0.000	0.000
12-Oct-2015	10:50:01	0.001	0.000
12-Oct-2015	10:54:01	0.000	0.000
12-Oct-2015	10:58:01	0.000	0.000
12-Oct-2015	11:02:01	0.000	0.000
12-Oct-2015	11:06:01	0.000	0.000
12-Oct-2015	11:10:01	0.000	0.000
12-Oct-2015	11:14:01	0.000	0.000
12-Oct-2015	11:18:01	0.000	0.000
12-Oct-2015	11:22:01	0.000	0.000
12-Oct-2015	11:26:01	0.000	0.000
12-Oct-2015	11:30:01	0.000	0.000
12-Oct-2015	11:34:01	0.000	0.000
12-Oct-2015	11:38:01	0.000	0.000

DUST MONITORING

October 2015

shading indicates values over the threshold

Monitor: 1

Threshold: 0.15 (mg/m^3)

Date	Time	Value (mg/m^3)	TWA (mg/m^3)
12-Oct-2015	11:42:01	0.000	0.000
12-Oct-2015	11:46:01	0.000	0.000
12-Oct-2015	11:50:01	0.000	0.000
12-Oct-2015	11:54:01	0.000	0.000
12-Oct-2015	11:58:01	0.000	0.000
12-Oct-2015	12:02:01	0.000	0.000
12-Oct-2015	12:06:01	0.000	0.000
12-Oct-2015	12:10:01	0.000	0.000
12-Oct-2015	12:14:01	0.000	0.000
12-Oct-2015	12:18:01	0.000	0.000
12-Oct-2015	12:22:01	0.000	0.000
12-Oct-2015	12:26:01	0.000	0.000
12-Oct-2015	12:30:01	0.000	0.000
12-Oct-2015	12:34:01	0.000	0.000
12-Oct-2015	12:38:01	0.000	0.000
12-Oct-2015	12:42:01	0.000	0.000
12-Oct-2015	12:46:01	0.000	0.000
12-Oct-2015	12:50:01	0.000	0.000
12-Oct-2015	12:54:01	0.000	0.000
12-Oct-2015	12:58:01	0.000	0.000
12-Oct-2015	13:02:01	0.000	0.000
12-Oct-2015	13:06:01	0.000	0.000
12-Oct-2015	13:10:01	0.000	0.000
12-Oct-2015	13:14:01	0.000	0.000
12-Oct-2015	13:18:01	0.000	0.000
12-Oct-2015	13:22:01	0.000	0.000
12-Oct-2015	13:26:01	0.000	0.000
12-Oct-2015	13:30:01	0.000	0.000
12-Oct-2015	13:34:01	0.000	0.000
12-Oct-2015	13:38:01	0.000	0.000
12-Oct-2015	13:42:01	0.000	0.000
12-Oct-2015	13:46:01	0.000	0.000
12-Oct-2015	13:50:01	0.000	0.000
12-Oct-2015	13:54:01	0.000	0.000
12-Oct-2015	13:58:01	0.000	0.000
12-Oct-2015	14:02:01	0.000	0.000
12-Oct-2015	14:06:01	0.000	0.000
12-Oct-2015	14:10:01	0.000	0.000
12-Oct-2015	14:14:01	0.000	0.000
12-Oct-2015	14:18:01	0.000	0.000
12-Oct-2015	14:22:01	0.001	0.000

DUST MONITORING

October 2015

shading indicates values over the threshold

Monitor: 1

Threshold: 0.15 (mg/m^3)

Date	Time	Value (mg/m^3)	TWA (mg/m^3)
12-Oct-2015	14:26:01	0.000	0.000
12-Oct-2015	14:30:01	0.000	0.000
12-Oct-2015	14:34:01	0.000	0.000
12-Oct-2015	14:38:01	0.000	0.000
12-Oct-2015	14:42:01	0.000	0.001
12-Oct-2015	14:46:01	0.002	0.001
12-Oct-2015	14:50:01	0.000	0.001
12-Oct-2015	14:54:01	0.000	0.000
12-Oct-2015	14:58:01	0.000	0.001
12-Oct-2015	15:02:01	0.002	0.001
12-Oct-2015	15:06:01	0.000	0.001
12-Oct-2015	15:10:01	0.000	0.001
12-Oct-2015	15:14:01	0.003	0.002
12-Oct-2015	15:18:01	0.002	0.002
12-Oct-2015	15:22:01	0.000	0.001
12-Oct-2015	15:26:01	0.000	0.000
12-Oct-2015	15:30:01	0.000	0.000
12-Oct-2015	15:34:01	0.000	0.000
12-Oct-2015	15:38:01	0.000	0.000
12-Oct-2015	15:42:01	0.000	0.000
14-Oct-2015	09:39:24	0.001	0.001
14-Oct-2015	09:43:24	0.000	0.001
14-Oct-2015	09:47:24	0.001	0.000
14-Oct-2015	09:51:24	0.000	0.001
14-Oct-2015	09:55:24	0.001	0.002
14-Oct-2015	09:59:24	0.005	0.002
14-Oct-2015	10:03:24	0.001	0.003
14-Oct-2015	10:07:24	0.002	0.001
14-Oct-2015	10:11:24	0.001	0.001
14-Oct-2015	10:15:24	0.001	0.001
14-Oct-2015	10:19:24	0.002	0.001
14-Oct-2015	10:23:24	0.000	0.001
14-Oct-2015	10:27:24	0.000	0.000
14-Oct-2015	10:31:24	0.000	0.000
14-Oct-2015	10:35:24	0.000	0.000
14-Oct-2015	10:39:24	0.000	0.000
14-Oct-2015	10:43:24	0.001	0.001
14-Oct-2015	10:47:24	0.001	0.001
14-Oct-2015	10:51:24	0.000	0.000
14-Oct-2015	10:55:24	0.000	0.000
14-Oct-2015	10:59:24	0.000	0.000

DUST MONITORING

October 2015

shading indicates values over the threshold

Monitor: 1

Threshold: 0.15 (mg/m^3)

Date	Time	Value (mg/m^3)	TWA (mg/m^3)
14-Oct-2015	11:03:24	0.000	0.000
14-Oct-2015	11:07:24	0.000	0.001
14-Oct-2015	11:11:24	0.004	0.004
14-Oct-2015	11:15:24	0.008	0.004
14-Oct-2015	11:19:24	0.001	0.003
14-Oct-2015	11:23:24	0.000	0.001
14-Oct-2015	11:27:24	0.002	0.001
14-Oct-2015	11:31:24	0.000	0.001
14-Oct-2015	11:35:24	0.002	0.001
14-Oct-2015	11:39:24	0.001	0.001
14-Oct-2015	11:43:24	0.000	0.001
14-Oct-2015	11:47:24	0.001	0.000
14-Oct-2015	11:51:24	0.000	0.000
14-Oct-2015	11:55:24	0.000	0.000
14-Oct-2015	11:59:24	0.001	0.000
14-Oct-2015	12:03:24	0.000	0.000
14-Oct-2015	12:07:24	0.000	0.000
14-Oct-2015	12:11:24	0.000	0.001
14-Oct-2015	12:15:24	0.002	0.002
14-Oct-2015	12:19:24	0.003	0.002
14-Oct-2015	12:23:24	0.000	0.001
14-Oct-2015	12:27:24	0.000	0.000
14-Oct-2015	12:31:24	0.001	0.000
14-Oct-2015	12:35:24	0.000	0.000
14-Oct-2015	12:39:24	0.000	0.000
14-Oct-2015	12:43:24	0.000	0.000
14-Oct-2015	12:47:24	0.000	0.000
14-Oct-2015	12:51:24	0.000	0.000
14-Oct-2015	12:55:24	0.000	0.000
14-Oct-2015	12:59:24	0.000	0.000
14-Oct-2015	13:03:24	0.001	0.000
14-Oct-2015	13:07:24	0.000	0.000
14-Oct-2015	13:11:24	0.000	0.000
14-Oct-2015	13:15:24	0.001	0.000
14-Oct-2015	13:19:24	0.000	0.001
14-Oct-2015	13:23:24	0.002	0.001
14-Oct-2015	13:27:24	0.002	0.001
14-Oct-2015	13:31:24	0.000	0.001
14-Oct-2015	13:35:24	0.000	0.000
14-Oct-2015	13:39:24	0.000	0.000
14-Oct-2015	13:43:24	0.000	0.000

DUST MONITORING

October 2015

shading indicates values over the threshold

Monitor: 1

Threshold: 0.15 (mg/m^3)

Date	Time	Value (mg/m^3)	TWA (mg/m^3)
14-Oct-2015	13:47:24	0.000	0.000
14-Oct-2015	13:51:24	0.000	0.002
14-Oct-2015	13:55:24	0.007	0.003
14-Oct-2015	13:59:24	0.002	0.007
14-Oct-2015	14:03:24	0.013	0.006
14-Oct-2015	14:07:24	0.004	0.006
14-Oct-2015	14:11:24	0.002	0.003
14-Oct-2015	14:15:24	0.004	0.002
14-Oct-2015	14:19:24	0.001	0.002
14-Oct-2015	14:23:24	0.000	0.000
14-Oct-2015	14:27:24	0.000	0.000
14-Oct-2015	14:31:24	0.000	0.000
14-Oct-2015	14:35:24	0.000	0.001
14-Oct-2015	14:39:24	0.002	0.004
14-Oct-2015	14:43:24	0.010	0.005
14-Oct-2015	14:47:24	0.002	0.006
14-Oct-2015	14:51:24	0.005	0.002
14-Oct-2015	14:55:24	0.000	0.009
14-Oct-2015	14:59:24	0.022	0.009
14-Oct-2015	15:03:24	0.006	0.010
14-Oct-2015	15:07:24	0.001	0.003
14-Oct-2015	15:11:24	0.001	0.001
14-Oct-2015	15:15:24	0.000	0.018
14-Oct-2015	15:19:24	0.053	0.018
14-Oct-2015	15:23:24	0.001	0.019
14-Oct-2015	15:27:24	0.003	0.001
14-Oct-2015	15:31:24	0.000	0.001
14-Oct-2015	15:35:24	0.000	0.001
14-Oct-2015	15:39:24	0.004	0.002
14-Oct-2015	15:43:24	0.002	0.036
14-Oct-2015	15:47:24	0.101	0.042
14-Oct-2015	15:51:24	0.023	0.042
14-Oct-2015	15:55:24	0.002	0.008
14-Oct-2015	15:59:24	0.000	0.002
14-Oct-2015	16:03:24	0.003	0.001
14-Oct-2015	16:07:24	0.001	0.001
14-Oct-2015	16:11:24	0.000	0.000
14-Oct-2015	16:15:24	0.000	0.005
14-Oct-2015	16:19:24	0.015	0.005
14-Oct-2015	16:23:24	0.000	0.007
14-Oct-2015	16:27:24	0.006	0.003

DUST MONITORING

October 2015

shading indicates values over the threshold

Monitor: 1

Threshold: 0.15 (mg/m^3)

Date	Time	Value (mg/m^3)	TWA (mg/m^3)
14-Oct-2015	16:31:24	0.002	0.004
14-Oct-2015	16:35:24	0.003	0.002
14-Oct-2015	16:39:24	0.000	0.002
14-Oct-2015	16:43:24	0.003	0.002
14-Oct-2015	16:47:24	0.003	0.002
14-Oct-2015	16:51:24	0.000	0.001
14-Oct-2015	16:55:24	0.001	0.001
14-Oct-2015	16:59:24	0.001	0.001
14-Oct-2015	17:03:24	0.002	0.001
14-Oct-2015	17:07:24	0.001	0.004
14-Oct-2015	17:11:24	0.010	0.004
14-Oct-2015	17:15:24	0.002	0.006
14-Oct-2015	17:19:24	0.006	0.004
14-Oct-2015	17:23:24	0.003	0.004
14-Oct-2015	17:27:24	0.002	0.002
14-Oct-2015	17:31:24	0.002	0.002
14-Oct-2015	17:35:24	0.001	0.001
14-Oct-2015	17:39:24	0.000	0.001
14-Oct-2015	17:43:24	0.002	0.002
14-Oct-2015	17:47:24	0.005	0.003
14-Oct-2015	17:51:24	0.002	0.003
14-Oct-2015	17:55:24	0.001	0.002
14-Oct-2015	17:59:24	0.003	0.002
14-Oct-2015	18:03:24	0.002	0.002
14-Oct-2015	18:07:24	0.001	0.001
14-Oct-2015	18:11:24	0.000	0.000
14-Oct-2015	18:15:24	0.000	0.001
14-Oct-2015	18:19:24	0.002	0.001
14-Oct-2015	18:23:24	0.000	0.001
14-Oct-2015	18:27:24	0.002	0.001
14-Oct-2015	18:31:24	0.000	0.001
15-Oct-2015	12:21:44	0.001	0.002
15-Oct-2015	12:25:44	0.003	0.002
15-Oct-2015	12:29:44	0.002	0.004
15-Oct-2015	12:33:44	0.008	0.004
15-Oct-2015	12:37:44	0.003	0.004
15-Oct-2015	12:41:44	0.001	0.001
15-Oct-2015	12:45:44	0.000	0.001
15-Oct-2015	12:49:44	0.002	0.001
15-Oct-2015	12:53:44	0.001	0.002
15-Oct-2015	12:57:44	0.002	0.001

DUST MONITORING

October 2015

shading indicates values over the threshold

Monitor: 1

Threshold: 0.15 (mg/m^3)

Date	Time	Value (mg/m^3)	TWA (mg/m^3)
15-Oct-2015	13:01:44	0.001	0.001
15-Oct-2015	13:05:44	0.000	0.002
15-Oct-2015	13:09:44	0.005	0.005
15-Oct-2015	13:13:44	0.011	0.007
15-Oct-2015	13:17:44	0.005	0.006
15-Oct-2015	13:21:44	0.002	0.002
15-Oct-2015	13:25:44	0.000	0.002
15-Oct-2015	13:29:44	0.003	0.004
15-Oct-2015	13:33:44	0.008	0.004
15-Oct-2015	13:37:44	0.002	0.011
15-Oct-2015	13:41:44	0.023	0.016
15-Oct-2015	13:45:44	0.024	0.034
15-Oct-2015	13:49:44	0.055	0.058
15-Oct-2015	13:53:44	0.096	0.063
15-Oct-2015	13:57:44	0.039	0.046
15-Oct-2015	14:01:44	0.003	0.034
15-Oct-2015	14:05:44	0.061	0.043
15-Oct-2015	14:09:44	0.065	0.072
15-Oct-2015	14:13:44	0.091	0.058
15-Oct-2015	14:17:44	0.018	0.040
15-Oct-2015	14:21:44	0.011	0.010
15-Oct-2015	14:25:44	0.002	0.004
15-Oct-2015	14:29:44	0.000	0.001
15-Oct-2015	14:33:44	0.002	0.009
15-Oct-2015	14:37:44	0.026	0.010
15-Oct-2015	14:41:44	0.001	0.009
15-Oct-2015	14:45:44	0.001	0.018
15-Oct-2015	14:49:44	0.052	0.028
15-Oct-2015	14:53:44	0.031	0.035
15-Oct-2015	14:57:44	0.022	0.021
15-Oct-2015	15:01:44	0.009	0.024
15-Oct-2015	15:05:44	0.042	0.028
15-Oct-2015	15:09:44	0.033	0.027
15-Oct-2015	15:13:44	0.005	0.079
15-Oct-2015	15:17:44	0.200	0.070
15-Oct-2015	15:21:44	0.006	0.072
15-Oct-2015	15:25:44	0.009	0.007
15-Oct-2015	15:29:44	0.005	0.006
15-Oct-2015	15:33:44	0.004	0.006
15-Oct-2015	15:37:44	0.009	0.005
15-Oct-2015	15:41:44	0.003	0.006

DUST MONITORING

October 2015

shading indicates values over the threshold

Monitor: 1

Threshold: 0.15 (mg/m^3)

Date	Time	Value (mg/m^3)	TWA (mg/m^3)
15-Oct-2015	15:45:44	0.007	0.005
15-Oct-2015	15:49:44	0.004	0.004
15-Oct-2015	15:53:44	0.001	0.003
15-Oct-2015	15:57:44	0.003	0.002
15-Oct-2015	16:01:44	0.003	0.004
15-Oct-2015	16:05:44	0.006	0.003
15-Oct-2015	16:09:44	0.001	0.003
15-Oct-2015	16:13:44	0.001	0.001
15-Oct-2015	16:17:44	0.000	0.001
15-Oct-2015	16:21:44	0.001	0.001
15-Oct-2015	16:25:44	0.002	0.001
15-Oct-2015	16:29:44	0.001	0.002
15-Oct-2015	16:33:44	0.002	0.001
15-Oct-2015	16:37:44	0.001	0.001
15-Oct-2015	16:41:44	0.001	0.001
15-Oct-2015	16:45:44	0.002	0.001
15-Oct-2015	16:49:44	0.000	0.001
15-Oct-2015	16:53:44	0.002	0.017
15-Oct-2015	16:57:44	0.048	0.020
15-Oct-2015	17:01:44	0.009	0.022
15-Oct-2015	17:05:44	0.010	0.007
15-Oct-2015	17:09:44	0.002	0.006
15-Oct-2015	17:13:44	0.007	0.007
15-Oct-2015	17:17:44	0.013	0.012
15-Oct-2015	17:21:44	0.016	0.015
15-Oct-2015	17:25:44	0.017	0.018
15-Oct-2015	17:29:44	0.022	0.021
15-Oct-2015	17:33:44	0.023	0.023
15-Oct-2015	17:37:44	0.025	0.024
15-Oct-2015	17:41:44	0.023	0.025
15-Oct-2015	17:45:44	0.027	0.025
15-Oct-2015	17:49:44	0.025	0.026
15-Oct-2015	17:53:44	0.025	0.026
15-Oct-2015	17:57:44	0.029	0.027
15-Oct-2015	18:01:44	0.028	0.028
15-Oct-2015	18:05:44	0.028	0.028
15-Oct-2015	18:09:44	0.028	0.029
15-Oct-2015	18:13:44	0.032	0.031
15-Oct-2015	18:17:44	0.033	0.033
15-Oct-2015	18:21:44	0.033	0.033
16-Oct-2015	12:55:05	0.029	0.024

DUST MONITORING

October 2015

shading indicates values over the threshold

Monitor: 1

Threshold: 0.15 (mg/m^3)

Date	Time	Value (mg/m^3)	TWA (mg/m^3)
16-Oct-2015	12:59:05	0.018	0.022
16-Oct-2015	13:03:05	0.019	0.019
16-Oct-2015	13:07:05	0.020	0.020
16-Oct-2015	13:11:05	0.020	0.020
16-Oct-2015	13:15:05	0.021	0.020
16-Oct-2015	13:19:05	0.019	0.019
16-Oct-2015	13:23:05	0.018	0.019
16-Oct-2015	13:27:05	0.021	0.019
16-Oct-2015	13:31:05	0.019	0.020
16-Oct-2015	13:35:05	0.021	0.021
16-Oct-2015	13:39:05	0.023	0.021
16-Oct-2015	13:43:05	0.019	0.020
16-Oct-2015	13:47:05	0.019	0.021
16-Oct-2015	13:51:05	0.025	0.021
16-Oct-2015	13:55:05	0.020	0.023
16-Oct-2015	13:59:05	0.024	0.024
16-Oct-2015	14:03:05	0.028	0.025
16-Oct-2015	14:07:05	0.022	0.024
16-Oct-2015	14:11:05	0.022	0.022
16-Oct-2015	14:15:05	0.022	0.024
16-Oct-2015	14:19:05	0.029	0.025
16-Oct-2015	14:23:05	0.024	0.025
16-Oct-2015	14:27:05	0.021	0.022
16-Oct-2015	14:31:05	0.022	0.023
16-Oct-2015	14:35:05	0.025	0.023
16-Oct-2015	14:39:05	0.022	0.022
16-Oct-2015	14:43:05	0.020	0.022
16-Oct-2015	14:47:05	0.025	0.023
16-Oct-2015	14:51:05	0.023	0.024
16-Oct-2015	14:55:05	0.025	0.025
16-Oct-2015	14:59:05	0.026	0.027
16-Oct-2015	15:03:05	0.029	0.027
16-Oct-2015	15:07:05	0.027	0.028
16-Oct-2015	15:11:05	0.027	0.027
16-Oct-2015	15:15:05	0.028	0.027
16-Oct-2015	15:19:05	0.026	0.028
16-Oct-2015	15:23:05	0.029	0.028
16-Oct-2015	15:27:05	0.028	0.029
16-Oct-2015	15:31:05	0.030	0.030
16-Oct-2015	15:35:05	0.032	0.030
16-Oct-2015	15:39:05	0.029	0.031

DUST MONITORING

October 2015

shading indicates values over the threshold

Monitor: 1

Threshold: 0.15 (mg/m^3)

Date	Time	Value (mg/m^3)	TWA (mg/m^3)
16-Oct-2015	15:43:05	0.032	0.034
16-Oct-2015	15:47:05	0.040	0.034
16-Oct-2015	15:51:05	0.030	0.033
16-Oct-2015	15:55:05	0.030	0.030
16-Oct-2015	15:59:05	0.031	0.031
16-Oct-2015	16:03:05	0.032	0.031
16-Oct-2015	16:07:05	0.030	0.032
16-Oct-2015	16:11:05	0.033	0.034
16-Oct-2015	16:15:05	0.038	0.034
16-Oct-2015	16:19:05	0.031	0.033
16-Oct-2015	16:23:05	0.030	0.031
16-Oct-2015	16:27:05	0.032	0.031
16-Oct-2015	16:31:05	0.030	0.031
16-Oct-2015	16:35:05	0.031	0.031
19-Oct-2015	10:05:31	0.042	0.038
19-Oct-2015	10:09:31	0.033	0.037
19-Oct-2015	10:13:31	0.036	0.035
19-Oct-2015	10:17:31	0.037	0.036
19-Oct-2015	10:21:31	0.035	0.034
19-Oct-2015	10:25:31	0.030	0.032
19-Oct-2015	10:29:31	0.031	0.031
19-Oct-2015	10:33:31	0.031	0.032
19-Oct-2015	10:37:31	0.033	0.033
19-Oct-2015	10:41:31	0.034	0.033
19-Oct-2015	10:45:31	0.032	0.033
19-Oct-2015	10:49:31	0.032	0.032
19-Oct-2015	10:53:31	0.032	0.032
19-Oct-2015	10:57:31	0.033	0.032
19-Oct-2015	11:01:31	0.030	0.030
19-Oct-2015	11:05:31	0.028	0.030
19-Oct-2015	11:09:31	0.031	0.031
19-Oct-2015	11:13:31	0.034	0.033
19-Oct-2015	11:17:31	0.033	0.034
19-Oct-2015	11:21:31	0.034	0.033
19-Oct-2015	11:25:31	0.031	0.033
19-Oct-2015	11:29:31	0.033	0.033
19-Oct-2015	11:33:31	0.036	0.033
19-Oct-2015	11:37:31	0.030	0.032
19-Oct-2015	11:41:31	0.030	0.029
19-Oct-2015	11:45:31	0.028	0.029
19-Oct-2015	11:49:31	0.028	0.029

DUST MONITORING

October 2015

shading indicates values over the threshold

Monitor: 1

Threshold: 0.15 (mg/m^3)

Date	Time	Value (mg/m^3)	TWA (mg/m^3)
19-Oct-2015	11:53:31	0.031	0.030
19-Oct-2015	11:57:31	0.030	0.029
19-Oct-2015	12:01:31	0.027	0.029
19-Oct-2015	12:05:31	0.030	0.029
19-Oct-2015	12:09:31	0.030	0.029
19-Oct-2015	12:13:31	0.028	0.029
19-Oct-2015	12:17:31	0.028	0.029
19-Oct-2015	12:21:31	0.032	0.032
19-Oct-2015	12:25:31	0.036	0.033
19-Oct-2015	12:29:31	0.032	0.032
19-Oct-2015	12:33:31	0.029	0.030
19-Oct-2015	12:37:31	0.029	0.030
19-Oct-2015	12:41:31	0.032	0.032
19-Oct-2015	12:45:31	0.034	0.033
19-Oct-2015	12:49:31	0.034	0.033
19-Oct-2015	12:53:31	0.030	0.032
19-Oct-2015	12:57:31	0.031	0.029
19-Oct-2015	13:01:31	0.027	0.029
19-Oct-2015	13:05:31	0.029	0.028
19-Oct-2015	13:09:31	0.028	0.029
19-Oct-2015	13:13:31	0.030	0.031
19-Oct-2015	13:17:31	0.034	0.032
19-Oct-2015	13:21:31	0.032	0.033
19-Oct-2015	13:25:31	0.033	0.034
19-Oct-2015	13:29:31	0.036	0.035
19-Oct-2015	13:33:31	0.037	0.036
19-Oct-2015	13:37:31	0.034	0.035
19-Oct-2015	13:41:31	0.033	0.034
19-Oct-2015	13:45:31	0.035	0.034
19-Oct-2015	13:49:31	0.035	0.035
19-Oct-2015	13:53:31	0.034	0.034
19-Oct-2015	13:57:31	0.033	0.033
19-Oct-2015	14:01:31	0.031	0.032
19-Oct-2015	14:05:31	0.032	0.031
19-Oct-2015	14:09:31	0.031	0.032
19-Oct-2015	14:13:31	0.032	0.033
19-Oct-2015	14:17:31	0.035	0.033
19-Oct-2015	14:21:31	0.033	0.034
19-Oct-2015	14:25:31	0.033	0.032
19-Oct-2015	14:29:31	0.030	0.032
19-Oct-2015	14:33:31	0.034	0.031

DUST MONITORING

October 2015

shading indicates values over the threshold

Monitor: 1

Threshold: 0.15 (mg/m^3)

Date	Time	Value (mg/m^3)	TWA (mg/m^3)
19-Oct-2015	14:37:31	0.030	0.032
19-Oct-2015	14:41:31	0.031	0.031
19-Oct-2015	14:45:31	0.032	0.032
19-Oct-2015	14:49:31	0.032	0.030
19-Oct-2015	14:53:31	0.026	0.029
19-Oct-2015	14:57:31	0.030	0.029
19-Oct-2015	15:01:31	0.031	0.032
19-Oct-2015	15:05:31	0.034	0.032
19-Oct-2015	15:09:31	0.031	0.031
19-Oct-2015	15:13:31	0.027	0.028
19-Oct-2015	15:17:31	0.027	0.027
19-Oct-2015	15:21:31	0.028	0.027
19-Oct-2015	15:25:31	0.027	0.027
19-Oct-2015	15:29:31	0.027	0.028
19-Oct-2015	15:33:31	0.030	0.031
19-Oct-2015	15:37:31	0.035	0.034
19-Oct-2015	15:41:31	0.037	0.036
20-Oct-2015	07:13:29	0.043	0.037
20-Oct-2015	07:17:29	0.031	0.035
20-Oct-2015	07:21:29	0.031	0.031
20-Oct-2015	07:25:29	0.031	0.032
20-Oct-2015	07:29:29	0.034	0.033
20-Oct-2015	07:33:29	0.034	0.034
20-Oct-2015	07:37:29	0.033	0.034
20-Oct-2015	07:41:29	0.034	0.036
20-Oct-2015	07:45:29	0.040	0.036
20-Oct-2015	07:49:29	0.035	0.037
20-Oct-2015	07:53:29	0.035	0.034
20-Oct-2015	07:57:29	0.033	0.034
20-Oct-2015	08:01:29	0.034	0.035
20-Oct-2015	08:05:29	0.037	0.034
20-Oct-2015	08:09:29	0.032	0.034
20-Oct-2015	08:13:29	0.034	0.034
20-Oct-2015	08:17:29	0.036	0.036
20-Oct-2015	08:21:29	0.038	0.040
20-Oct-2015	08:25:29	0.046	0.039
20-Oct-2015	08:29:29	0.033	0.037
20-Oct-2015	08:33:29	0.033	0.032
20-Oct-2015	08:37:29	0.031	0.033
20-Oct-2015	08:41:29	0.034	0.032
20-Oct-2015	08:45:29	0.032	0.035

DUST MONITORING

October 2015

shading indicates values over the threshold

Monitor: 1

Threshold: 0.15 (mg/m^3)

Date	Time	Value (mg/m^3)	TWA (mg/m^3)
20-Oct-2015	08:49:29	0.040	0.035
20-Oct-2015	08:53:29	0.032	0.036
20-Oct-2015	08:57:29	0.036	0.033
20-Oct-2015	09:01:29	0.032	0.035
20-Oct-2015	09:05:29	0.037	0.035
20-Oct-2015	09:09:29	0.035	0.035
20-Oct-2015	09:13:29	0.032	0.033
20-Oct-2015	09:17:29	0.032	0.032
20-Oct-2015	09:21:29	0.032	0.032
20-Oct-2015	09:25:29	0.033	0.032
20-Oct-2015	09:29:29	0.032	0.032
20-Oct-2015	09:33:29	0.032	0.032
20-Oct-2015	09:37:29	0.032	0.032
20-Oct-2015	09:41:29	0.031	0.032
20-Oct-2015	09:45:29	0.033	0.035
20-Oct-2015	09:49:29	0.040	0.036
20-Oct-2015	09:53:29	0.035	0.036
20-Oct-2015	09:57:29	0.034	0.034
20-Oct-2015	10:01:29	0.034	0.034
20-Oct-2015	10:05:29	0.033	0.033
20-Oct-2015	10:09:29	0.033	0.033
20-Oct-2015	10:13:29	0.032	0.033
20-Oct-2015	10:17:29	0.033	0.033
20-Oct-2015	10:21:29	0.034	0.033
20-Oct-2015	10:25:29	0.033	0.034
20-Oct-2015	10:29:29	0.035	0.033
20-Oct-2015	10:33:29	0.032	0.033
20-Oct-2015	10:37:29	0.033	0.033
20-Oct-2015	10:41:29	0.033	0.033
20-Oct-2015	10:45:29	0.033	0.033
20-Oct-2015	10:49:29	0.032	0.033
20-Oct-2015	10:53:29	0.033	0.033
20-Oct-2015	10:57:29	0.033	0.033
20-Oct-2015	11:01:29	0.033	0.033
20-Oct-2015	11:05:29	0.033	0.033
20-Oct-2015	11:09:29	0.032	0.032
20-Oct-2015	11:13:29	0.032	0.032
20-Oct-2015	11:17:29	0.033	0.032
20-Oct-2015	11:21:29	0.032	0.033
20-Oct-2015	11:25:29	0.033	0.032
20-Oct-2015	11:29:29	0.032	0.032

DUST MONITORING

October 2015

shading indicates values over the threshold

Monitor: 1

Threshold: 0.15 (mg/m^3)

Date	Time	Value (mg/m^3)	TWA (mg/m^3)
20-Oct-2015	11:33:29	0.032	0.032
20-Oct-2015	11:37:29	0.032	0.032
20-Oct-2015	11:41:29	0.032	0.032
20-Oct-2015	11:45:29	0.031	0.032
20-Oct-2015	11:49:29	0.032	0.032
20-Oct-2015	11:53:29	0.032	0.032
20-Oct-2015	11:57:29	0.032	0.032
20-Oct-2015	12:01:29	0.032	0.032
20-Oct-2015	12:05:29	0.033	0.032
20-Oct-2015	12:09:29	0.032	0.032
20-Oct-2015	12:13:29	0.032	0.033
20-Oct-2015	12:17:29	0.034	0.033
20-Oct-2015	12:21:29	0.032	0.033
20-Oct-2015	12:25:29	0.032	0.032
20-Oct-2015	12:29:29	0.032	0.032
20-Oct-2015	12:33:29	0.033	0.032
20-Oct-2015	12:37:29	0.032	0.033
20-Oct-2015	12:41:29	0.035	0.033
20-Oct-2015	12:45:29	0.033	0.034
20-Oct-2015	12:49:29	0.033	0.034
20-Oct-2015	12:53:29	0.035	0.035
20-Oct-2015	12:57:29	0.036	0.035
20-Oct-2015	13:01:29	0.033	0.036
20-Oct-2015	13:05:29	0.038	0.087
20-Oct-2015	13:09:29	0.190	0.087
20-Oct-2015	13:13:29	0.034	0.087
20-Oct-2015	13:17:29	0.037	0.110
20-Oct-2015	13:21:29	0.260	0.315
20-Oct-2015	13:25:29	0.649	0.315
20-Oct-2015	13:29:29	0.037	0.343
21-Oct-2015	08:34:06	0.053	0.054
21-Oct-2015	08:38:06	0.055	0.054
21-Oct-2015	08:42:06	0.055	0.056
21-Oct-2015	08:46:06	0.057	0.057
21-Oct-2015	08:50:06	0.058	0.058
21-Oct-2015	08:54:06	0.060	0.059
21-Oct-2015	08:58:06	0.059	0.060
21-Oct-2015	09:02:06	0.060	0.059
21-Oct-2015	09:06:06	0.059	0.060
21-Oct-2015	09:10:06	0.060	0.060
21-Oct-2015	09:14:06	0.061	0.060

DUST MONITORING

October 2015

shading indicates values over the threshold

Monitor: 1

Threshold: 0.15 (mg/m^3)

Date	Time	Value (mg/m^3)	TWA (mg/m^3)
21-Oct-2015	09:18:06	0.060	0.060
21-Oct-2015	09:22:06	0.060	0.060
21-Oct-2015	09:26:06	0.061	0.061
21-Oct-2015	09:30:06	0.063	0.063
21-Oct-2015	09:34:06	0.064	0.063
21-Oct-2015	09:38:06	0.063	0.064
21-Oct-2015	09:42:06	0.064	0.064
21-Oct-2015	09:46:06	0.064	0.066
21-Oct-2015	09:50:06	0.069	0.071
21-Oct-2015	09:54:06	0.079	0.071
21-Oct-2015	09:58:06	0.064	0.070
21-Oct-2015	10:02:06	0.067	0.065
21-Oct-2015	10:06:06	0.065	0.066
21-Oct-2015	10:10:06	0.066	0.066
21-Oct-2015	10:14:06	0.067	0.067
21-Oct-2015	10:18:06	0.067	0.066
21-Oct-2015	10:22:06	0.065	0.066
21-Oct-2015	10:26:06	0.066	0.065
21-Oct-2015	10:30:06	0.065	0.066
21-Oct-2015	10:34:06	0.066	0.066
21-Oct-2015	10:38:06	0.066	0.066
21-Oct-2015	10:42:06	0.067	0.067
21-Oct-2015	10:46:06	0.067	0.067
21-Oct-2015	10:50:06	0.068	0.068
21-Oct-2015	10:54:06	0.069	0.068
21-Oct-2015	10:58:06	0.068	0.069
21-Oct-2015	11:02:06	0.069	0.069
21-Oct-2015	11:06:06	0.070	0.070
21-Oct-2015	11:10:06	0.070	0.070
21-Oct-2015	11:14:06	0.070	0.070
21-Oct-2015	11:18:06	0.070	0.070
21-Oct-2015	11:22:06	0.071	0.070
21-Oct-2015	11:26:06	0.070	0.071
21-Oct-2015	11:30:06	0.072	0.071
21-Oct-2015	11:34:06	0.072	0.072
21-Oct-2015	11:38:06	0.072	0.072
21-Oct-2015	11:42:06	0.073	0.073
21-Oct-2015	11:46:06	0.074	0.073
21-Oct-2015	11:50:06	0.073	0.219
21-Oct-2015	11:54:06	0.511	0.226
21-Oct-2015	11:58:06	0.093	0.226

DUST MONITORING

October 2015

shading indicates values over the threshold

Monitor: 1

Threshold: 0.15 (mg/m^3)

Date	Time	Value (mg/m^3)	TWA (mg/m^3)
21-Oct-2015	12:02:06	0.075	0.081
21-Oct-2015	12:06:06	0.076	0.077
21-Oct-2015	12:10:06	0.079	0.089
21-Oct-2015	12:14:06	0.113	0.096
22-Oct-2015	06:51:42	0.066	0.059
22-Oct-2015	06:55:42	0.051	0.057
22-Oct-2015	06:59:42	0.053	0.051
22-Oct-2015	07:03:42	0.050	0.052
22-Oct-2015	07:07:42	0.052	0.052
22-Oct-2015	07:11:42	0.053	0.054
22-Oct-2015	07:15:42	0.057	0.055
22-Oct-2015	07:19:42	0.056	0.057
22-Oct-2015	07:23:42	0.059	0.058
22-Oct-2015	07:27:42	0.058	0.059
22-Oct-2015	07:31:42	0.059	0.059
22-Oct-2015	07:35:42	0.060	0.066
22-Oct-2015	07:39:42	0.079	0.067
22-Oct-2015	07:43:42	0.061	0.065
22-Oct-2015	07:47:42	0.054	0.058
22-Oct-2015	07:51:42	0.059	0.064
22-Oct-2015	07:55:42	0.079	0.073
22-Oct-2015	07:59:42	0.080	0.072
22-Oct-2015	08:03:42	0.058	0.064
22-Oct-2015	08:07:42	0.054	0.055
22-Oct-2015	08:11:42	0.052	0.053
22-Oct-2015	08:15:42	0.054	0.054
22-Oct-2015	08:19:42	0.057	0.061
22-Oct-2015	08:23:42	0.071	0.061
22-Oct-2015	08:27:42	0.055	0.062
22-Oct-2015	08:31:42	0.059	0.057
22-Oct-2015	08:35:42	0.058	0.056
22-Oct-2015	08:39:42	0.052	0.053
22-Oct-2015	08:43:42	0.049	0.050
22-Oct-2015	08:47:42	0.050	0.049
22-Oct-2015	08:51:42	0.048	0.049
22-Oct-2015	08:55:42	0.049	0.048
22-Oct-2015	08:59:42	0.048	0.048
22-Oct-2015	09:03:42	0.048	0.048
22-Oct-2015	09:07:42	0.048	0.048
22-Oct-2015	09:11:42	0.047	0.048
22-Oct-2015	09:15:42	0.048	0.048

DUST MONITORING

October 2015

shading indicates values over the threshold

Monitor: 1

Threshold: 0.15 (mg/m^3)

Date	Time	Value (mg/m^3)	TWA (mg/m^3)
22-Oct-2015	09:19:42	0.048	0.048
22-Oct-2015	09:23:42	0.047	0.059
22-Oct-2015	09:27:42	0.082	0.060
22-Oct-2015	09:31:42	0.051	0.061
22-Oct-2015	09:35:42	0.050	0.049
22-Oct-2015	09:39:42	0.047	0.048
22-Oct-2015	09:43:42	0.047	0.047
22-Oct-2015	09:47:42	0.046	0.046
22-Oct-2015	09:51:42	0.045	0.045
22-Oct-2015	09:55:42	0.045	0.046
22-Oct-2015	09:59:42	0.047	0.048
22-Oct-2015	10:03:42	0.053	0.048
22-Oct-2015	10:07:42	0.045	0.047
22-Oct-2015	10:11:42	0.043	0.043
22-Oct-2015	10:15:42	0.041	0.043
22-Oct-2015	10:19:42	0.044	0.042
22-Oct-2015	10:23:42	0.042	0.043
22-Oct-2015	10:27:42	0.042	0.042
22-Oct-2015	10:31:42	0.042	0.041
22-Oct-2015	10:35:42	0.040	0.041
22-Oct-2015	10:39:42	0.040	0.040
22-Oct-2015	10:43:42	0.039	0.039
22-Oct-2015	10:47:42	0.039	0.039
22-Oct-2015	10:51:42	0.039	0.040
22-Oct-2015	10:55:42	0.042	0.041
22-Oct-2015	10:59:42	0.042	0.041
22-Oct-2015	11:03:42	0.039	0.040
22-Oct-2015	11:07:42	0.039	0.040
22-Oct-2015	11:11:42	0.043	0.040
22-Oct-2015	11:15:42	0.037	0.039
22-Oct-2015	11:19:42	0.037	0.037
22-Oct-2015	11:23:42	0.036	0.037
22-Oct-2015	11:27:42	0.037	0.037
22-Oct-2015	11:31:42	0.037	0.038
22-Oct-2015	11:35:42	0.039	0.039
22-Oct-2015	11:39:42	0.040	0.040
22-Oct-2015	11:43:42	0.040	0.040
22-Oct-2015	11:47:42	0.039	0.039
22-Oct-2015	11:51:42	0.039	0.039
22-Oct-2015	11:55:42	0.040	0.040
22-Oct-2015	11:59:42	0.040	0.040

DUST MONITORING

October 2015

shading indicates values over the threshold

Monitor: 1

Threshold: 0.15 (mg/m^3)

Date	Time	Value (mg/m^3)	TWA (mg/m^3)
22-Oct-2015	12:03:42	0.040	0.041
22-Oct-2015	12:07:42	0.042	0.041
22-Oct-2015	12:11:42	0.040	0.084
22-Oct-2015	12:15:42	0.170	0.091
22-Oct-2015	12:19:42	0.062	0.090
22-Oct-2015	12:23:42	0.038	0.046
22-Oct-2015	12:27:42	0.037	0.039
22-Oct-2015	12:31:42	0.042	0.040
22-Oct-2015	12:35:42	0.040	0.041
22-Oct-2015	12:39:42	0.040	0.042
22-Oct-2015	12:43:42	0.045	0.041
22-Oct-2015	12:47:42	0.038	0.041
22-Oct-2015	12:51:42	0.041	0.040
22-Oct-2015	12:55:42	0.040	0.041
22-Oct-2015	12:59:42	0.041	0.041
22-Oct-2015	13:03:42	0.041	0.040
22-Oct-2015	13:07:42	0.039	0.039
22-Oct-2015	13:11:42	0.037	0.038
22-Oct-2015	13:15:42	0.038	0.038
22-Oct-2015	13:19:42	0.038	0.038
22-Oct-2015	13:23:42	0.038	0.038
22-Oct-2015	13:27:42	0.037	0.037
22-Oct-2015	13:31:42	0.036	0.036
22-Oct-2015	13:35:42	0.036	0.036
22-Oct-2015	13:39:42	0.037	0.036
22-Oct-2015	13:43:42	0.036	0.037
22-Oct-2015	13:47:42	0.037	0.036
22-Oct-2015	13:51:42	0.036	0.036
22-Oct-2015	13:55:42	0.036	0.036
22-Oct-2015	13:59:42	0.037	0.036
22-Oct-2015	14:03:42	0.036	0.037
22-Oct-2015	14:07:42	0.037	0.037
22-Oct-2015	14:11:42	0.037	0.038
22-Oct-2015	14:15:42	0.040	0.038
22-Oct-2015	14:19:42	0.038	0.038
22-Oct-2015	14:23:42	0.036	0.038
22-Oct-2015	14:27:42	0.039	0.038
22-Oct-2015	14:31:42	0.038	0.037
22-Oct-2015	14:35:42	0.035	0.036
22-Oct-2015	14:39:42	0.036	0.035
22-Oct-2015	14:43:42	0.034	0.035

DUST MONITORING

October 2015

shading indicates values over the threshold

Monitor: 1

Threshold: 0.15 (mg/m^3)

Date	Time	Value (mg/m^3)	TWA (mg/m^3)
22-Oct-2015	14:47:42	0.034	0.034
22-Oct-2015	14:51:42	0.034	0.034
22-Oct-2015	14:55:42	0.035	0.035
22-Oct-2015	14:59:42	0.035	0.035
22-Oct-2015	15:03:42	0.035	0.035
22-Oct-2015	15:07:42	0.035	0.035
22-Oct-2015	15:11:42	0.035	0.035
22-Oct-2015	15:15:42	0.036	0.035
22-Oct-2015	15:19:42	0.035	0.036
22-Oct-2015	15:23:42	0.036	0.036
22-Oct-2015	15:27:42	0.036	0.037
22-Oct-2015	15:31:42	0.038	0.037
22-Oct-2015	15:35:42	0.037	0.037
22-Oct-2015	15:39:42	0.037	0.038
22-Oct-2015	15:43:42	0.039	0.038
22-Oct-2015	15:47:42	0.037	0.038
22-Oct-2015	15:51:42	0.037	0.037
22-Oct-2015	15:55:42	0.037	0.037
22-Oct-2015	15:59:42	0.037	0.037
22-Oct-2015	16:03:42	0.037	0.037
22-Oct-2015	16:07:42	0.037	0.037
22-Oct-2015	16:11:42	0.037	0.037
22-Oct-2015	16:15:42	0.036	0.037
22-Oct-2015	16:19:42	0.037	0.037
22-Oct-2015	16:23:42	0.037	0.037
22-Oct-2015	16:27:42	0.037	0.037
22-Oct-2015	16:31:42	0.037	0.037
22-Oct-2015	16:35:42	0.038	0.037
22-Oct-2015	16:39:42	0.037	0.037
22-Oct-2015	16:43:42	0.037	0.037
22-Oct-2015	16:47:42	0.037	0.037
22-Oct-2015	16:51:42	0.037	0.039
22-Oct-2015	16:55:42	0.042	0.040
22-Oct-2015	16:59:42	0.041	0.040
22-Oct-2015	17:03:42	0.037	0.038
22-Oct-2015	17:07:42	0.037	0.037
22-Oct-2015	17:11:42	0.038	0.038
22-Oct-2015	17:15:42	0.038	0.038
22-Oct-2015	17:19:42	0.037	0.037
22-Oct-2015	17:23:42	0.037	0.037
22-Oct-2015	17:27:42	0.038	0.038

DUST MONITORING

October 2015

shading indicates values over the threshold

Monitor: 1

Threshold: 0.15 (mg/m^3)

Date	Time	Value (mg/m^3)	TWA (mg/m^3)
22-Oct-2015	17:31:42	0.038	0.038
22-Oct-2015	17:35:42	0.038	0.039
22-Oct-2015	17:39:42	0.040	0.039
22-Oct-2015	17:43:42	0.039	0.039
22-Oct-2015	17:47:42	0.038	0.039
22-Oct-2015	17:51:42	0.039	0.039
22-Oct-2015	17:55:42	0.040	0.039
22-Oct-2015	17:59:42	0.039	0.040
22-Oct-2015	18:03:42	0.042	0.041
22-Oct-2015	18:07:42	0.041	0.041
22-Oct-2015	18:11:42	0.041	0.041
22-Oct-2015	18:15:42	0.040	0.041
22-Oct-2015	18:19:42	0.041	0.041
22-Oct-2015	18:23:42	0.042	0.043
22-Oct-2015	18:27:42	0.045	0.045
22-Oct-2015	18:31:42	0.047	0.048
22-Oct-2015	18:35:42	0.051	0.047
22-Oct-2015	18:39:42	0.043	0.045
22-Oct-2015	18:43:42	0.042	0.042
22-Oct-2015	18:47:42	0.041	0.042
22-Oct-2015	18:51:42	0.042	0.041
22-Oct-2015	18:55:42	0.041	0.042
23-Oct-2015	07:00:56	0.056	0.056
23-Oct-2015	07:04:56	0.056	0.053
23-Oct-2015	07:08:56	0.047	0.050
23-Oct-2015	07:12:56	0.047	0.050
23-Oct-2015	07:16:56	0.055	0.052
23-Oct-2015	07:20:56	0.055	0.054
23-Oct-2015	07:24:56	0.051	0.051
23-Oct-2015	07:28:56	0.047	0.046
23-Oct-2015	07:32:56	0.041	0.043
23-Oct-2015	07:36:56	0.041	0.041
23-Oct-2015	07:40:56	0.041	0.040
23-Oct-2015	07:44:56	0.037	0.039
23-Oct-2015	07:48:56	0.038	0.038
23-Oct-2015	07:52:56	0.040	0.040
23-Oct-2015	07:56:56	0.041	0.280
23-Oct-2015	08:00:56	0.759	0.303
23-Oct-2015	08:04:56	0.108	0.303
23-Oct-2015	08:08:56	0.042	0.064
23-Oct-2015	08:12:56	0.042	0.044

DUST MONITORING

October 2015

shading indicates values over the threshold

Monitor: 1

Threshold: 0.15 (mg/m^3)

Date	Time	Value (mg/m^3)	TWA (mg/m^3)
23-Oct-2015	08:16:56	0.048	0.050
23-Oct-2015	08:20:56	0.060	0.053
23-Oct-2015	08:24:56	0.052	0.059
23-Oct-2015	08:28:56	0.065	0.055
23-Oct-2015	08:32:56	0.048	0.055
23-Oct-2015	08:36:56	0.052	0.052
23-Oct-2015	08:40:56	0.055	0.051
23-Oct-2015	08:44:56	0.046	0.045
23-Oct-2015	08:48:56	0.033	0.037
23-Oct-2015	08:52:56	0.032	0.037
23-Oct-2015	08:56:56	0.046	0.036
23-Oct-2015	09:00:56	0.031	0.037
23-Oct-2015	09:04:56	0.035	0.032
23-Oct-2015	09:08:56	0.030	0.031
23-Oct-2015	09:12:56	0.029	0.035
23-Oct-2015	09:16:56	0.045	0.035
23-Oct-2015	09:20:56	0.031	0.045
23-Oct-2015	09:24:56	0.058	0.042
23-Oct-2015	09:28:56	0.037	0.043
23-Oct-2015	09:32:56	0.033	0.035
23-Oct-2015	09:36:56	0.035	0.034
23-Oct-2015	09:40:56	0.033	0.034
23-Oct-2015	09:44:56	0.033	0.034
23-Oct-2015	09:48:56	0.037	0.035
23-Oct-2015	09:52:56	0.035	0.035
23-Oct-2015	09:56:56	0.034	0.036
23-Oct-2015	10:00:56	0.039	0.037
23-Oct-2015	10:04:56	0.039	0.040
23-Oct-2015	10:08:56	0.042	0.038
23-Oct-2015	10:12:56	0.034	0.044
23-Oct-2015	10:16:56	0.055	0.068
23-Oct-2015	10:20:56	0.114	0.070
23-Oct-2015	10:24:56	0.042	0.066
23-Oct-2015	10:28:56	0.043	0.040
23-Oct-2015	10:32:56	0.034	0.035
23-Oct-2015	10:36:56	0.028	0.047
23-Oct-2015	10:40:56	0.078	0.047
23-Oct-2015	10:44:56	0.034	0.046
23-Oct-2015	10:48:56	0.027	0.029
23-Oct-2015	10:52:56	0.027	0.027
23-Oct-2015	10:56:56	0.026	0.027

DUST MONITORING

October 2015

shading indicates values over the threshold

Monitor: 1

Threshold: 0.15 (mg/m^3)

Date	Time	Value (mg/m^3)	TWA (mg/m^3)
23-Oct-2015	11:00:56	0.029	0.027
23-Oct-2015	11:04:56	0.026	0.027
23-Oct-2015	11:08:56	0.026	0.026
23-Oct-2015	11:12:56	0.025	0.025
23-Oct-2015	11:16:56	0.025	0.025
23-Oct-2015	11:20:56	0.025	0.025
23-Oct-2015	11:24:56	0.024	0.024
23-Oct-2015	11:28:56	0.024	0.025
23-Oct-2015	11:32:56	0.026	0.025
23-Oct-2015	11:36:56	0.024	0.025
23-Oct-2015	11:40:56	0.025	0.024
23-Oct-2015	11:44:56	0.024	0.025
23-Oct-2015	11:48:56	0.025	0.024
23-Oct-2015	11:52:56	0.024	0.025
23-Oct-2015	11:56:56	0.025	0.026
23-Oct-2015	12:00:56	0.030	0.026
23-Oct-2015	12:04:56	0.023	0.031
23-Oct-2015	12:08:56	0.041	0.031
23-Oct-2015	12:12:56	0.029	0.036
23-Oct-2015	12:16:56	0.038	0.033
23-Oct-2015	12:20:56	0.032	0.032
23-Oct-2015	12:24:56	0.027	0.029
23-Oct-2015	12:28:56	0.027	0.029
23-Oct-2015	12:32:56	0.034	0.033
23-Oct-2015	12:36:56	0.038	0.033
23-Oct-2015	12:40:56	0.028	0.048
23-Oct-2015	12:44:56	0.079	0.048
23-Oct-2015	12:48:56	0.037	0.050
23-Oct-2015	12:52:56	0.034	0.037
23-Oct-2015	12:56:56	0.041	0.038
23-Oct-2015	13:00:56	0.040	0.040
23-Oct-2015	13:04:56	0.039	0.053
23-Oct-2015	13:08:56	0.080	0.064
23-Oct-2015	13:12:56	0.073	0.066
23-Oct-2015	13:16:56	0.046	0.056
23-Oct-2015	13:20:56	0.049	0.043
23-Oct-2015	13:24:56	0.034	0.038
23-Oct-2015	13:28:56	0.030	0.031
23-Oct-2015	13:32:56	0.029	0.032
23-Oct-2015	13:36:56	0.037	0.031
23-Oct-2015	13:40:56	0.026	0.029

DUST MONITORING

October 2015

shading indicates values over the threshold

Monitor: 1

Threshold: 0.15 (mg/m^3)

Date	Time	Value (mg/m^3)	TWA (mg/m^3)
23-Oct-2015	13:44:56	0.025	0.026
23-Oct-2015	13:48:56	0.027	0.028
23-Oct-2015	13:52:56	0.032	0.029
23-Oct-2015	13:56:56	0.028	0.033
23-Oct-2015	14:00:56	0.039	0.032
23-Oct-2015	14:04:56	0.030	0.037
23-Oct-2015	14:08:56	0.042	0.034
23-Oct-2015	14:12:56	0.029	0.032
23-Oct-2015	14:16:56	0.024	0.030
23-Oct-2015	14:20:56	0.038	0.029
23-Oct-2015	14:24:56	0.026	0.046
23-Oct-2015	14:28:56	0.075	0.043
23-Oct-2015	14:32:56	0.027	0.042
23-Oct-2015	14:36:56	0.024	0.024
23-Oct-2015	14:40:56	0.022	0.024
23-Oct-2015	14:44:56	0.025	0.026
23-Oct-2015	14:48:56	0.030	0.026
23-Oct-2015	14:52:56	0.023	0.025
23-Oct-2015	14:56:56	0.023	0.023
23-Oct-2015	15:00:56	0.024	0.023
23-Oct-2015	15:04:56	0.022	0.023
23-Oct-2015	15:08:56	0.024	0.023
23-Oct-2015	15:12:56	0.022	0.023
23-Oct-2015	15:16:56	0.022	0.029
23-Oct-2015	15:20:56	0.043	0.031
23-Oct-2015	15:24:56	0.027	0.031
23-Oct-2015	15:28:56	0.023	0.024
23-Oct-2015	15:32:56	0.022	0.025
23-Oct-2015	15:36:56	0.030	0.025
23-Oct-2015	15:40:56	0.023	0.025
23-Oct-2015	15:44:56	0.023	0.032
23-Oct-2015	15:48:56	0.050	0.037

DUST MONITORING

October 2015

shading indicates values over the threshold

Monitor: 2

Threshold: 0.15 (mg/m^3)

Date	Time	Value (mg/m^3)	TWA (mg/m^3)
5-Oct-2015	07:16:51	0.004	0.003
5-Oct-2015	07:20:51	0.001	0.002
5-Oct-2015	07:24:51	0.000	0.000
5-Oct-2015	07:28:51	0.000	0.000
5-Oct-2015	07:32:51	0.000	0.000
5-Oct-2015	07:36:51	0.001	0.000
5-Oct-2015	07:40:51	0.000	0.000
5-Oct-2015	07:44:51	0.000	0.000
5-Oct-2015	07:48:51	0.000	0.000
5-Oct-2015	07:52:51	0.000	0.000
5-Oct-2015	07:56:51	0.000	0.000
5-Oct-2015	08:00:51	0.000	0.000
5-Oct-2015	08:04:51	0.000	0.000
5-Oct-2015	08:08:51	0.000	0.000
5-Oct-2015	08:12:51	0.000	0.000
5-Oct-2015	08:16:51	0.000	0.000
5-Oct-2015	08:20:51	0.000	0.000
5-Oct-2015	08:24:51	0.000	0.000
5-Oct-2015	08:28:51	0.000	0.000
5-Oct-2015	08:32:51	0.000	0.000
5-Oct-2015	08:36:51	0.000	0.000
5-Oct-2015	08:40:51	0.000	0.000
5-Oct-2015	08:44:51	0.000	0.000
5-Oct-2015	08:48:51	0.000	0.000
5-Oct-2015	08:52:51	0.000	0.000
5-Oct-2015	08:56:51	0.000	0.001
5-Oct-2015	09:00:51	0.003	0.001
5-Oct-2015	09:04:51	0.000	0.001
5-Oct-2015	09:08:51	0.000	0.000
5-Oct-2015	09:12:51	0.000	0.000
5-Oct-2015	09:16:51	0.000	0.000
5-Oct-2015	09:20:51	0.000	0.000
5-Oct-2015	09:24:51	0.000	0.000
5-Oct-2015	09:28:51	0.000	0.000
5-Oct-2015	09:32:51	0.000	0.000
5-Oct-2015	09:36:51	0.000	0.001
5-Oct-2015	09:40:51	0.002	0.001
5-Oct-2015	09:44:51	0.001	0.001
5-Oct-2015	09:48:51	0.000	0.000
5-Oct-2015	09:52:51	0.000	0.000
5-Oct-2015	09:56:51	0.000	0.000

DUST MONITORING

October 2015

shading indicates values over the threshold

Monitor: 2

Threshold: 0.15 (mg/m^3)

Date	Time	Value (mg/m^3)	TWA (mg/m^3)
5-Oct-2015	10:00:51	0.000	0.000
5-Oct-2015	10:04:51	0.000	0.000
5-Oct-2015	10:08:51	0.000	0.000
5-Oct-2015	10:12:51	0.000	0.000
5-Oct-2015	10:16:51	0.000	0.000
5-Oct-2015	10:20:51	0.000	0.000
5-Oct-2015	10:24:51	0.000	0.000
5-Oct-2015	10:28:51	0.000	0.000
5-Oct-2015	10:32:51	0.000	0.000
5-Oct-2015	10:36:51	0.000	0.000
5-Oct-2015	10:40:51	0.000	0.000
5-Oct-2015	10:44:51	0.000	0.000
5-Oct-2015	10:48:51	0.000	0.000
5-Oct-2015	10:52:51	0.000	0.000
5-Oct-2015	10:56:51	0.000	0.000
5-Oct-2015	11:00:51	0.000	0.000
5-Oct-2015	11:04:51	0.000	0.000
5-Oct-2015	11:08:51	0.000	0.000
5-Oct-2015	11:12:51	0.000	0.000
5-Oct-2015	11:16:51	0.000	0.000
5-Oct-2015	11:20:51	0.000	0.000
5-Oct-2015	11:24:51	0.000	0.000
5-Oct-2015	11:28:51	0.000	0.000
5-Oct-2015	11:32:51	0.000	0.000
5-Oct-2015	11:36:51	0.000	0.000
5-Oct-2015	11:40:51	0.000	0.000
5-Oct-2015	11:44:51	0.000	0.000
5-Oct-2015	11:48:51	0.000	0.000
5-Oct-2015	11:52:51	0.000	0.000
5-Oct-2015	11:56:51	0.000	0.000
5-Oct-2015	12:00:51	0.000	0.000
5-Oct-2015	12:04:51	0.000	0.000
5-Oct-2015	12:08:51	0.000	0.000
5-Oct-2015	12:12:51	0.000	0.000
5-Oct-2015	12:16:51	0.000	0.000
5-Oct-2015	12:20:51	0.000	0.000
5-Oct-2015	12:24:51	0.000	0.000
5-Oct-2015	12:28:51	0.000	0.000
5-Oct-2015	12:32:51	0.000	0.000
5-Oct-2015	12:36:51	0.000	0.000
5-Oct-2015	12:40:51	0.000	0.000

DUST MONITORING

October 2015

shading indicates values over the threshold

Monitor: 2

Threshold: 0.15 (mg/m^3)

Date	Time	Value (mg/m^3)	TWA (mg/m^3)
5-Oct-2015	12:44:51	0.000	0.000
5-Oct-2015	12:48:51	0.000	0.000
5-Oct-2015	12:52:51	0.000	0.000
5-Oct-2015	12:56:51	0.000	0.000
5-Oct-2015	13:00:51	0.000	0.000
5-Oct-2015	13:04:51	0.000	0.000
5-Oct-2015	13:08:51	0.000	0.000
5-Oct-2015	13:12:51	0.000	0.000
5-Oct-2015	13:16:51	0.000	0.000
5-Oct-2015	13:20:51	0.000	0.000
5-Oct-2015	13:24:51	0.000	0.000
5-Oct-2015	13:28:51	0.000	0.000
5-Oct-2015	13:32:51	0.000	0.000
5-Oct-2015	13:36:51	0.000	0.000
5-Oct-2015	13:40:51	0.000	0.000
5-Oct-2015	13:44:51	0.000	0.000
5-Oct-2015	13:48:51	0.000	0.000
5-Oct-2015	13:52:51	0.000	0.000
5-Oct-2015	13:56:51	0.000	0.000
5-Oct-2015	14:00:51	0.000	0.000
5-Oct-2015	14:04:51	0.000	0.003
5-Oct-2015	14:08:51	0.008	0.003
5-Oct-2015	14:12:51	0.000	0.003
5-Oct-2015	14:16:51	0.000	0.000
5-Oct-2015	14:20:51	0.000	0.000
5-Oct-2015	14:24:51	0.000	0.000
5-Oct-2015	14:28:51	0.000	0.000
5-Oct-2015	14:32:51	0.000	0.000
5-Oct-2015	14:36:51	0.000	0.000
5-Oct-2015	14:40:51	0.000	0.000
5-Oct-2015	14:44:51	0.000	0.000
5-Oct-2015	14:48:51	0.000	0.000
5-Oct-2015	14:52:51	0.000	0.000
5-Oct-2015	14:56:51	0.000	0.000
5-Oct-2015	15:00:51	0.000	0.000
5-Oct-2015	15:04:51	0.000	0.000
5-Oct-2015	15:08:51	0.000	0.000
5-Oct-2015	15:12:51	0.000	0.000
5-Oct-2015	15:16:51	0.000	0.000
5-Oct-2015	15:20:51	0.000	0.000
5-Oct-2015	15:24:51	0.000	0.000

DUST MONITORING

October 2015

shading indicates values over the threshold

Monitor: 2

Threshold: 0.15 (mg/m^3)

Date	Time	Value (mg/m^3)	TWA (mg/m^3)
5-Oct-2015	15:28:51	0.000	0.000
5-Oct-2015	15:32:51	0.000	0.000
5-Oct-2015	15:36:51	0.000	0.000
5-Oct-2015	15:40:51	0.000	0.000
5-Oct-2015	15:44:51	0.000	0.000
6-Oct-2015	07:15:45	0.000	0.000
6-Oct-2015	07:19:45	0.000	0.000
6-Oct-2015	07:23:45	0.000	0.000
6-Oct-2015	07:27:45	0.000	0.000
6-Oct-2015	07:31:45	0.000	0.000
6-Oct-2015	07:35:45	0.000	0.000
6-Oct-2015	07:39:45	0.000	0.000
6-Oct-2015	07:43:45	0.000	0.000
6-Oct-2015	07:47:45	0.000	0.000
6-Oct-2015	07:51:45	0.000	0.000
6-Oct-2015	07:55:45	0.000	0.000
6-Oct-2015	07:59:45	0.000	0.000
6-Oct-2015	08:03:45	0.000	0.000
6-Oct-2015	08:07:45	0.000	0.000
6-Oct-2015	08:11:45	0.000	0.000
6-Oct-2015	08:15:45	0.000	0.000
6-Oct-2015	08:19:45	0.000	0.000
6-Oct-2015	08:23:45	0.000	0.000
6-Oct-2015	08:27:45	0.000	0.000
6-Oct-2015	08:31:45	0.000	0.000
6-Oct-2015	08:35:45	0.000	0.000
6-Oct-2015	08:39:45	0.000	0.000
6-Oct-2015	08:43:45	0.000	0.000
6-Oct-2015	08:47:45	0.000	0.000
6-Oct-2015	08:51:45	0.000	0.000
6-Oct-2015	08:55:45	0.000	0.000
6-Oct-2015	08:59:45	0.000	0.000
6-Oct-2015	09:03:45	0.000	0.000
6-Oct-2015	09:07:45	0.000	0.000
6-Oct-2015	09:11:45	0.000	0.000
6-Oct-2015	09:15:45	0.000	0.000
6-Oct-2015	09:19:45	0.000	0.000
6-Oct-2015	09:23:45	0.000	0.000
6-Oct-2015	09:27:45	0.000	0.000
6-Oct-2015	09:31:45	0.000	0.000
6-Oct-2015	09:35:45	0.000	0.000

DUST MONITORING

October 2015

shading indicates values over the threshold

Monitor: 2

Threshold: 0.15 (mg/m^3)

Date	Time	Value (mg/m^3)	TWA (mg/m^3)
6-Oct-2015	09:39:45	0.000	0.000
6-Oct-2015	09:43:45	0.001	0.000
6-Oct-2015	09:47:45	0.000	0.000
6-Oct-2015	09:51:45	0.000	0.000
6-Oct-2015	09:55:45	0.000	0.000
6-Oct-2015	09:59:45	0.000	0.000
6-Oct-2015	10:03:45	0.000	0.000
6-Oct-2015	10:07:45	0.000	0.000
6-Oct-2015	10:11:45	0.000	0.000
6-Oct-2015	10:15:45	0.000	0.001
6-Oct-2015	10:19:45	0.002	0.001
6-Oct-2015	10:23:45	0.000	0.001
6-Oct-2015	10:27:45	0.000	0.001
6-Oct-2015	10:31:45	0.004	0.001
6-Oct-2015	10:35:45	0.000	0.002
6-Oct-2015	10:39:45	0.001	0.000
6-Oct-2015	10:43:45	0.000	0.000
6-Oct-2015	10:47:45	0.000	0.000
6-Oct-2015	10:51:45	0.000	0.000
6-Oct-2015	10:55:45	0.000	0.002
6-Oct-2015	10:59:45	0.007	0.003
6-Oct-2015	11:03:45	0.002	0.003
6-Oct-2015	11:07:45	0.000	0.001
6-Oct-2015	11:11:45	0.000	0.000
6-Oct-2015	11:15:45	0.000	0.000
6-Oct-2015	11:19:45	0.000	0.000
6-Oct-2015	11:23:45	0.000	0.001
6-Oct-2015	11:27:45	0.004	0.001
6-Oct-2015	11:31:45	0.000	0.001
6-Oct-2015	11:35:45	0.000	0.000
6-Oct-2015	11:39:45	0.000	0.000
6-Oct-2015	11:43:45	0.000	0.000
6-Oct-2015	11:47:45	0.000	0.003
6-Oct-2015	11:51:45	0.010	0.008
6-Oct-2015	11:55:45	0.014	0.008
6-Oct-2015	11:59:45	0.000	0.005
6-Oct-2015	12:03:45	0.000	0.000
6-Oct-2015	12:07:45	0.000	0.000
6-Oct-2015	12:11:45	0.000	0.000
6-Oct-2015	12:15:45	0.000	0.000
6-Oct-2015	12:19:45	0.000	0.000

DUST MONITORING

October 2015

shading indicates values over the threshold

Monitor: 2

Threshold: 0.15 (mg/m^3)

Date	Time	Value (mg/m^3)	TWA (mg/m^3)
6-Oct-2015	12:23:45	0.000	0.000
6-Oct-2015	12:27:45	0.000	0.000
6-Oct-2015	12:31:45	0.001	0.000
6-Oct-2015	12:35:45	0.000	0.000
6-Oct-2015	12:39:45	0.000	0.000
6-Oct-2015	12:43:45	0.000	0.000
6-Oct-2015	12:47:45	0.000	0.000
6-Oct-2015	12:51:45	0.000	0.000
6-Oct-2015	12:55:45	0.000	0.000
6-Oct-2015	12:59:45	0.000	0.000
6-Oct-2015	13:03:45	0.000	0.000
6-Oct-2015	13:07:45	0.000	0.000
6-Oct-2015	13:11:45	0.000	0.003
6-Oct-2015	13:15:45	0.008	0.003
6-Oct-2015	13:19:45	0.000	0.003
6-Oct-2015	13:23:45	0.000	0.001
6-Oct-2015	13:27:45	0.004	0.001
6-Oct-2015	13:31:45	0.000	0.001
6-Oct-2015	13:35:45	0.000	0.000
6-Oct-2015	13:39:45	0.000	0.000
6-Oct-2015	13:43:45	0.000	0.000
6-Oct-2015	13:47:45	0.000	0.000
6-Oct-2015	13:51:45	0.000	0.000
6-Oct-2015	13:55:45	0.000	0.000
6-Oct-2015	13:59:45	0.000	0.000
6-Oct-2015	14:03:45	0.000	0.000
6-Oct-2015	14:07:45	0.000	0.000
6-Oct-2015	14:11:45	0.000	0.000
6-Oct-2015	14:15:45	0.001	0.000
6-Oct-2015	14:19:45	0.000	0.018
6-Oct-2015	14:23:45	0.053	0.018
6-Oct-2015	14:27:45	0.000	0.018
6-Oct-2015	14:31:45	0.000	0.000
6-Oct-2015	14:35:45	0.000	0.000
6-Oct-2015	14:39:45	0.000	0.000
6-Oct-2015	14:43:45	0.000	0.000
7-Oct-2015	08:59:21	0.000	0.000
7-Oct-2015	09:03:21	0.000	0.000
7-Oct-2015	09:07:21	0.000	0.000
7-Oct-2015	09:11:21	0.000	0.000
7-Oct-2015	09:15:21	0.000	0.000

DUST MONITORING

October 2015

shading indicates values over the threshold

Monitor: 2

Threshold: 0.15 (mg/m^3)

Date	Time	Value (mg/m^3)	TWA (mg/m^3)
7-Oct-2015	09:19:21	0.000	0.000
7-Oct-2015	09:23:21	0.000	0.000
7-Oct-2015	09:27:21	0.000	0.000
7-Oct-2015	09:31:21	0.000	0.000
7-Oct-2015	09:35:21	0.000	0.000
7-Oct-2015	09:39:21	0.000	0.000
7-Oct-2015	09:43:21	0.000	0.000
7-Oct-2015	09:47:21	0.000	0.000
7-Oct-2015	09:51:21	0.000	0.000
7-Oct-2015	09:55:21	0.000	0.000
7-Oct-2015	09:59:21	0.000	0.000
7-Oct-2015	10:03:21	0.001	0.000
7-Oct-2015	10:07:21	0.000	0.000
7-Oct-2015	10:11:21	0.000	0.000
7-Oct-2015	10:15:21	0.001	0.000
7-Oct-2015	10:19:21	0.000	0.000
7-Oct-2015	10:23:21	0.000	0.000
7-Oct-2015	10:27:21	0.000	0.000
7-Oct-2015	10:31:21	0.000	0.000
7-Oct-2015	10:35:21	0.000	0.000
7-Oct-2015	10:39:21	0.000	0.000
7-Oct-2015	10:43:21	0.001	0.000
7-Oct-2015	10:47:21	0.000	0.000
7-Oct-2015	10:51:21	0.000	0.000
7-Oct-2015	10:55:21	0.000	0.000
7-Oct-2015	10:59:21	0.000	0.000
7-Oct-2015	11:03:21	0.000	0.000
7-Oct-2015	11:07:21	0.000	0.000
7-Oct-2015	11:11:21	0.001	0.000
7-Oct-2015	11:15:21	0.000	0.000
7-Oct-2015	11:19:21	0.000	0.000
7-Oct-2015	11:23:21	0.000	0.000
7-Oct-2015	11:27:21	0.000	0.017
7-Oct-2015	11:31:21	0.051	0.019
7-Oct-2015	11:35:21	0.007	0.030
7-Oct-2015	11:39:21	0.031	0.013
7-Oct-2015	11:43:21	0.000	0.010
7-Oct-2015	11:47:21	0.000	0.000
7-Oct-2015	11:51:21	0.000	0.000
7-Oct-2015	11:55:21	0.000	0.000
7-Oct-2015	11:59:21	0.000	0.000

DUST MONITORING

October 2015

shading indicates values over the threshold

Monitor: 2

Threshold: 0.15 (mg/m^3)

Date	Time	Value (mg/m^3)	TWA (mg/m^3)
7-Oct-2015	12:03:21	0.000	0.005
7-Oct-2015	12:07:21	0.014	0.005
7-Oct-2015	12:11:21	0.000	0.005
7-Oct-2015	12:15:21	0.000	0.000
7-Oct-2015	12:19:21	0.000	0.000
7-Oct-2015	12:23:21	0.000	0.000
7-Oct-2015	12:27:21	0.000	0.000
7-Oct-2015	12:31:21	0.001	0.000
7-Oct-2015	12:35:21	0.000	0.000
7-Oct-2015	12:39:21	0.000	0.000
7-Oct-2015	12:43:21	0.000	0.000
7-Oct-2015	12:47:21	0.000	0.000
7-Oct-2015	12:51:21	0.000	0.000
7-Oct-2015	12:55:21	0.000	0.000
7-Oct-2015	12:59:21	0.000	0.003
7-Oct-2015	13:03:21	0.009	0.003
7-Oct-2015	13:07:21	0.000	0.003
7-Oct-2015	13:11:21	0.000	0.000
7-Oct-2015	13:15:21	0.000	0.000
7-Oct-2015	13:19:21	0.000	0.000
7-Oct-2015	13:23:21	0.000	0.000
7-Oct-2015	13:27:21	0.000	0.000
7-Oct-2015	13:31:21	0.000	0.000
7-Oct-2015	13:35:21	0.000	0.000
7-Oct-2015	13:39:21	0.000	0.000
7-Oct-2015	13:43:21	0.000	0.001
7-Oct-2015	13:47:21	0.004	0.002
7-Oct-2015	13:51:21	0.001	0.002
7-Oct-2015	13:55:21	0.000	0.001
7-Oct-2015	13:59:21	0.001	0.011
7-Oct-2015	14:03:21	0.033	0.011
7-Oct-2015	14:07:21	0.000	0.011
7-Oct-2015	14:11:21	0.000	0.006
7-Oct-2015	14:15:21	0.017	0.006
7-Oct-2015	14:19:21	0.002	0.006
7-Oct-2015	14:23:21	0.000	0.001
7-Oct-2015	14:27:21	0.000	0.000
7-Oct-2015	14:31:21	0.000	0.002
7-Oct-2015	14:35:21	0.007	0.008
7-Oct-2015	14:39:21	0.016	0.009
7-Oct-2015	14:43:21	0.004	0.007

DUST MONITORING

October 2015

shading indicates values over the threshold

Monitor: 2

Threshold: 0.15 (mg/m^3)

Date	Time	Value (mg/m^3)	TWA (mg/m^3)
7-Oct-2015	14:47:21	0.000	0.003
7-Oct-2015	14:51:21	0.004	0.003
7-Oct-2015	14:55:21	0.006	0.003
7-Oct-2015	14:59:21	0.000	0.002
7-Oct-2015	15:03:21	0.001	0.001
7-Oct-2015	15:07:21	0.003	0.001
7-Oct-2015	15:11:21	0.000	0.006
7-Oct-2015	15:15:21	0.016	0.014
7-Oct-2015	15:19:21	0.026	0.016
7-Oct-2015	15:23:21	0.006	0.011
7-Oct-2015	15:27:21	0.000	0.002
7-Oct-2015	15:31:21	0.000	0.000
7-Oct-2015	15:35:21	0.000	0.000
7-Oct-2015	15:39:21	0.000	0.000
7-Oct-2015	15:43:21	0.000	0.000
7-Oct-2015	15:47:21	0.000	0.003
7-Oct-2015	15:51:21	0.008	0.003
7-Oct-2015	15:55:21	0.001	0.003
7-Oct-2015	15:59:21	0.000	0.002
7-Oct-2015	16:03:21	0.004	0.001
7-Oct-2015	16:07:21	0.000	0.002
8-Oct-2015	07:09:13	0.008	0.005
8-Oct-2015	07:13:13	0.001	0.009
8-Oct-2015	07:17:13	0.018	0.007
8-Oct-2015	07:21:13	0.003	0.007
8-Oct-2015	07:25:13	0.000	0.011
8-Oct-2015	07:29:13	0.031	0.033
8-Oct-2015	07:33:13	0.069	0.040
8-Oct-2015	07:37:13	0.020	0.030
8-Oct-2015	07:41:13	0.002	0.010
8-Oct-2015	07:45:13	0.009	0.004
8-Oct-2015	07:49:13	0.002	0.004
8-Oct-2015	07:53:13	0.001	0.001
8-Oct-2015	07:57:13	0.000	0.000
8-Oct-2015	08:01:13	0.000	0.000
8-Oct-2015	08:05:13	0.000	0.000
8-Oct-2015	08:09:13	0.000	0.000
8-Oct-2015	08:13:13	0.000	0.000
8-Oct-2015	08:17:13	0.000	0.000
8-Oct-2015	08:21:13	0.000	0.000
8-Oct-2015	08:25:13	0.000	0.000

DUST MONITORING

October 2015

shading indicates values over the threshold

Monitor: 2

Threshold: 0.15 (mg/m^3)

Date	Time	Value (mg/m^3)	TWA (mg/m^3)
8-Oct-2015	08:29:13	0.000	0.000
8-Oct-2015	08:33:13	0.000	0.000
8-Oct-2015	08:37:13	0.000	0.000
8-Oct-2015	08:41:13	0.000	0.000
8-Oct-2015	08:45:13	0.000	0.000
8-Oct-2015	08:49:13	0.000	0.000
8-Oct-2015	08:53:13	0.000	0.000
8-Oct-2015	08:57:13	0.000	0.000
8-Oct-2015	09:01:13	0.000	0.000
8-Oct-2015	09:05:13	0.000	0.000
8-Oct-2015	09:09:13	0.000	0.000
8-Oct-2015	09:13:13	0.001	0.000
8-Oct-2015	09:17:13	0.000	0.001
8-Oct-2015	09:21:13	0.001	0.000
8-Oct-2015	09:25:13	0.000	0.000
8-Oct-2015	09:29:13	0.000	0.002
8-Oct-2015	09:33:13	0.005	0.005
8-Oct-2015	09:37:13	0.010	0.005
8-Oct-2015	09:41:13	0.000	0.004
8-Oct-2015	09:45:13	0.001	0.000
8-Oct-2015	09:49:13	0.000	0.004
8-Oct-2015	09:53:13	0.011	0.006
8-Oct-2015	09:57:13	0.008	0.009
8-Oct-2015	10:01:13	0.008	0.009
8-Oct-2015	10:05:13	0.012	0.009
8-Oct-2015	10:09:13	0.007	0.011
8-Oct-2015	10:13:13	0.015	0.009
8-Oct-2015	10:17:13	0.004	0.007
8-Oct-2015	10:21:13	0.003	0.002
8-Oct-2015	10:25:13	0.000	0.001
8-Oct-2015	10:29:13	0.000	0.000
8-Oct-2015	10:33:13	0.000	0.000
8-Oct-2015	10:37:13	0.000	0.000
8-Oct-2015	10:41:13	0.000	0.000
8-Oct-2015	10:45:13	0.000	0.000
8-Oct-2015	10:49:13	0.000	0.000
8-Oct-2015	10:53:13	0.000	0.000
8-Oct-2015	10:57:13	0.000	0.001
8-Oct-2015	11:01:13	0.002	0.008
8-Oct-2015	11:05:13	0.023	0.009
8-Oct-2015	11:09:13	0.001	0.009

DUST MONITORING

October 2015

shading indicates values over the threshold

Monitor: 2

Threshold: 0.15 (mg/m^3)

Date	Time	Value (mg/m^3)	TWA (mg/m^3)
8-Oct-2015	11:13:13	0.002	0.001
8-Oct-2015	11:17:13	0.000	0.001
8-Oct-2015	11:21:13	0.000	0.000
8-Oct-2015	11:25:13	0.001	0.000
8-Oct-2015	11:29:13	0.000	0.000
8-Oct-2015	11:33:13	0.000	0.013
8-Oct-2015	11:37:13	0.039	0.014
8-Oct-2015	11:41:13	0.002	0.014
8-Oct-2015	11:45:13	0.000	0.001
8-Oct-2015	11:49:13	0.001	0.000
8-Oct-2015	11:53:13	0.000	0.000
8-Oct-2015	11:57:13	0.000	0.000
8-Oct-2015	12:01:13	0.000	0.000
8-Oct-2015	12:05:13	0.000	0.000
8-Oct-2015	12:09:13	0.001	0.000
8-Oct-2015	12:13:13	0.000	0.000
8-Oct-2015	12:17:13	0.000	0.000
8-Oct-2015	12:21:13	0.000	0.000
8-Oct-2015	12:25:13	0.001	0.000
8-Oct-2015	12:29:13	0.000	0.000
8-Oct-2015	12:33:13	0.000	0.000
8-Oct-2015	12:37:13	0.001	0.000
8-Oct-2015	12:41:13	0.000	0.000
8-Oct-2015	12:45:13	0.000	0.000
8-Oct-2015	12:49:13	0.000	0.000
8-Oct-2015	12:53:13	0.000	0.000
8-Oct-2015	12:57:13	0.000	0.000
8-Oct-2015	13:01:13	0.000	0.000
8-Oct-2015	13:05:13	0.000	0.000
8-Oct-2015	13:09:13	0.000	0.003
8-Oct-2015	13:13:13	0.009	0.003
8-Oct-2015	13:17:13	0.000	0.003
8-Oct-2015	13:21:13	0.000	0.000
8-Oct-2015	13:25:13	0.000	0.000
8-Oct-2015	13:29:13	0.001	0.004
8-Oct-2015	13:33:13	0.010	0.004
8-Oct-2015	13:37:13	0.001	0.004
8-Oct-2015	13:41:13	0.000	0.000
8-Oct-2015	13:45:13	0.000	0.000
8-Oct-2015	13:49:13	0.000	0.000
8-Oct-2015	13:53:13	0.000	0.000

DUST MONITORING

October 2015

shading indicates values over the threshold

Monitor: 2

Threshold: 0.15 (mg/m^3)

Date	Time	Value (mg/m^3)	TWA (mg/m^3)
8-Oct-2015	13:57:13	0.000	0.000
8-Oct-2015	14:01:13	0.000	0.000
8-Oct-2015	14:05:13	0.000	0.000
8-Oct-2015	14:09:13	0.000	0.000
8-Oct-2015	14:13:13	0.001	0.001
8-Oct-2015	14:17:13	0.002	0.001
8-Oct-2015	14:21:13	0.001	0.001
8-Oct-2015	14:25:13	0.001	0.004
8-Oct-2015	14:29:13	0.009	0.004
8-Oct-2015	14:33:13	0.003	0.006
8-Oct-2015	14:37:13	0.005	0.005
8-Oct-2015	14:41:13	0.008	0.006
8-Oct-2015	14:45:13	0.004	0.006
8-Oct-2015	14:49:13	0.005	0.007
8-Oct-2015	14:53:13	0.013	0.010
8-Oct-2015	14:57:13	0.012	0.012
8-Oct-2015	15:01:13	0.012	0.011
8-Oct-2015	15:05:13	0.008	0.009
8-Oct-2015	15:09:13	0.007	0.007
8-Oct-2015	15:13:13	0.005	0.006
8-Oct-2015	15:17:13	0.007	0.007
8-Oct-2015	15:21:13	0.008	0.008
8-Oct-2015	15:25:13	0.009	0.009
8-Oct-2015	15:29:13	0.010	0.009
8-Oct-2015	15:33:13	0.007	0.008
8-Oct-2015	15:37:13	0.006	0.007
9-Oct-2015	08:03:21	0.000	0.003
9-Oct-2015	08:07:21	0.005	0.002
9-Oct-2015	08:11:21	0.002	0.003
9-Oct-2015	08:15:21	0.001	0.001
9-Oct-2015	08:19:21	0.000	0.003
9-Oct-2015	08:23:21	0.007	0.002
9-Oct-2015	08:27:21	0.000	0.003
9-Oct-2015	08:31:21	0.002	0.001
9-Oct-2015	08:35:21	0.000	0.001
9-Oct-2015	08:39:21	0.000	0.012
9-Oct-2015	08:43:21	0.036	0.012
9-Oct-2015	08:47:21	0.000	0.013
9-Oct-2015	08:51:21	0.002	0.001
9-Oct-2015	08:55:21	0.000	0.001
9-Oct-2015	08:59:21	0.001	0.001

DUST MONITORING

October 2015

shading indicates values over the threshold

Monitor: 2

Threshold: 0.15 (mg/m^3)

Date	Time	Value (mg/m^3)	TWA (mg/m^3)
9-Oct-2015	09:03:21	0.001	0.001
9-Oct-2015	09:07:21	0.002	0.011
9-Oct-2015	09:11:21	0.031	0.016
9-Oct-2015	09:15:21	0.016	0.018
9-Oct-2015	09:19:21	0.006	0.008
9-Oct-2015	09:23:21	0.003	0.004
9-Oct-2015	09:27:21	0.002	0.002
9-Oct-2015	09:31:21	0.002	0.002
9-Oct-2015	09:35:21	0.003	0.004
9-Oct-2015	09:39:21	0.007	0.005
9-Oct-2015	09:43:21	0.005	0.006
9-Oct-2015	09:47:21	0.006	0.014
9-Oct-2015	09:51:21	0.032	0.014
9-Oct-2015	09:55:21	0.004	0.013
9-Oct-2015	09:59:21	0.004	0.007
9-Oct-2015	10:03:21	0.014	0.006
9-Oct-2015	10:07:21	0.000	0.005
9-Oct-2015	10:11:21	0.000	0.001
9-Oct-2015	10:15:21	0.002	0.001
9-Oct-2015	10:19:21	0.002	0.002
9-Oct-2015	10:23:21	0.003	0.002
9-Oct-2015	10:27:21	0.002	0.002
9-Oct-2015	10:31:21	0.000	0.002
9-Oct-2015	10:35:21	0.003	0.001
9-Oct-2015	10:39:21	0.001	0.002
9-Oct-2015	10:43:21	0.001	0.001
9-Oct-2015	10:47:21	0.000	0.000
9-Oct-2015	10:51:21	0.000	0.000
9-Oct-2015	10:55:21	0.001	0.000
9-Oct-2015	10:59:21	0.000	0.000
9-Oct-2015	11:03:21	0.000	0.000
9-Oct-2015	11:07:21	0.001	0.003
9-Oct-2015	11:11:21	0.008	0.054
9-Oct-2015	11:15:21	0.154	0.058
9-Oct-2015	11:19:21	0.013	0.056
9-Oct-2015	11:23:21	0.000	0.004
9-Oct-2015	11:27:21	0.000	0.000
9-Oct-2015	11:31:21	0.000	0.026
9-Oct-2015	11:35:21	0.077	0.026
9-Oct-2015	11:39:21	0.000	0.026
9-Oct-2015	11:43:21	0.002	0.001

DUST MONITORING

October 2015

shading indicates values over the threshold

Monitor: 2

Threshold: 0.15 (mg/m^3)

Date	Time	Value (mg/m^3)	TWA (mg/m^3)
9-Oct-2015	11:47:21	0.000	0.004
9-Oct-2015	11:51:21	0.009	0.043
9-Oct-2015	11:55:21	0.121	0.043
9-Oct-2015	11:59:21	0.000	0.044
9-Oct-2015	12:03:21	0.010	0.005
9-Oct-2015	12:07:21	0.005	0.005
9-Oct-2015	12:11:21	0.000	0.002
9-Oct-2015	12:15:21	0.000	0.001
9-Oct-2015	12:19:21	0.003	0.015
9-Oct-2015	12:23:21	0.043	0.015
9-Oct-2015	12:27:21	0.000	0.015
9-Oct-2015	12:31:21	0.002	0.009
9-Oct-2015	12:35:21	0.025	0.009
9-Oct-2015	12:39:21	0.000	0.008
9-Oct-2015	12:43:21	0.000	0.000
9-Oct-2015	12:47:21	0.000	0.000
9-Oct-2015	12:51:21	0.000	0.000
9-Oct-2015	12:55:21	0.000	0.000
9-Oct-2015	12:59:21	0.000	0.064
9-Oct-2015	13:03:21	0.192	0.064
9-Oct-2015	13:07:21	0.000	0.064
9-Oct-2015	13:11:21	0.000	0.000
9-Oct-2015	13:15:21	0.000	0.000
9-Oct-2015	13:19:21	0.000	0.002
9-Oct-2015	13:23:21	0.005	0.002
9-Oct-2015	13:27:21	0.000	0.003
9-Oct-2015	13:31:21	0.005	0.002
9-Oct-2015	13:35:21	0.000	0.002
9-Oct-2015	13:39:21	0.000	0.000
9-Oct-2015	13:43:21	0.001	0.013
9-Oct-2015	13:47:21	0.037	0.013
9-Oct-2015	13:51:21	0.000	0.013
9-Oct-2015	13:55:21	0.003	0.001
9-Oct-2015	13:59:21	0.000	0.002
9-Oct-2015	14:03:21	0.002	0.001
9-Oct-2015	14:07:21	0.001	0.001
9-Oct-2015	14:11:21	0.000	0.016
9-Oct-2015	14:15:21	0.046	0.015
9-Oct-2015	14:19:21	0.000	0.016
9-Oct-2015	14:23:21	0.001	0.000
9-Oct-2015	14:27:21	0.000	0.008

DUST MONITORING

October 2015

shading indicates values over the threshold

Monitor: 2

Threshold: 0.15 (mg/m^3)

Date	Time	Value (mg/m^3)	TWA (mg/m^3)
9-Oct-2015	14:31:21	0.022	0.007
9-Oct-2015	14:35:21	0.000	0.007
9-Oct-2015	14:39:21	0.000	0.000
9-Oct-2015	14:43:21	0.000	0.000
9-Oct-2015	14:47:21	0.000	0.000
9-Oct-2015	14:51:21	0.000	0.000
9-Oct-2015	14:55:21	0.000	0.000
9-Oct-2015	14:59:21	0.000	0.001
9-Oct-2015	15:03:21	0.003	0.001
9-Oct-2015	15:07:21	0.000	0.001
9-Oct-2015	15:11:21	0.000	0.000
9-Oct-2015	15:15:21	0.000	0.000
12-Oct-2015	07:58:47	0.002	0.002
12-Oct-2015	08:02:47	0.001	0.002
12-Oct-2015	08:06:47	0.004	0.002
12-Oct-2015	08:10:47	0.001	0.002
12-Oct-2015	08:14:47	0.001	0.002
12-Oct-2015	08:18:47	0.003	0.002
12-Oct-2015	08:22:47	0.002	0.003
12-Oct-2015	08:26:47	0.003	0.002
12-Oct-2015	08:30:47	0.002	0.003
12-Oct-2015	08:34:47	0.005	0.003
12-Oct-2015	08:38:47	0.003	0.003
12-Oct-2015	08:42:47	0.002	0.002
12-Oct-2015	08:46:47	0.001	0.002
12-Oct-2015	08:50:47	0.003	0.002
12-Oct-2015	08:54:47	0.002	0.002
12-Oct-2015	08:58:47	0.002	0.002
12-Oct-2015	09:02:47	0.002	0.002
12-Oct-2015	09:06:47	0.002	0.002
12-Oct-2015	09:10:47	0.003	0.002
12-Oct-2015	09:14:47	0.001	0.001
12-Oct-2015	09:18:47	0.000	0.000
12-Oct-2015	09:22:47	0.000	0.000
12-Oct-2015	09:26:47	0.001	0.001
12-Oct-2015	09:30:47	0.001	0.001
12-Oct-2015	09:34:47	0.001	0.001
12-Oct-2015	09:38:47	0.001	0.001
12-Oct-2015	09:42:47	0.001	0.001
12-Oct-2015	09:46:47	0.001	0.001
12-Oct-2015	09:50:47	0.001	0.001

DUST MONITORING

October 2015

shading indicates values over the threshold

Monitor: 2

Threshold: 0.15 (mg/m^3)

Date	Time	Value (mg/m^3)	TWA (mg/m^3)
12-Oct-2015	09:54:47	0.002	0.002
12-Oct-2015	09:58:47	0.002	0.002
12-Oct-2015	10:02:47	0.001	0.001
12-Oct-2015	10:06:47	0.000	0.000
12-Oct-2015	10:10:47	0.000	0.000
12-Oct-2015	10:14:47	0.000	0.000
12-Oct-2015	10:18:47	0.000	0.000
12-Oct-2015	10:22:47	0.000	0.000
12-Oct-2015	10:26:47	0.000	0.000
12-Oct-2015	10:30:47	0.001	0.000
12-Oct-2015	10:34:47	0.000	0.000
12-Oct-2015	10:38:47	0.000	0.000
12-Oct-2015	10:42:47	0.000	0.000
12-Oct-2015	10:46:47	0.000	0.000
12-Oct-2015	10:50:47	0.000	0.000
12-Oct-2015	10:54:47	0.000	0.000
12-Oct-2015	10:58:47	0.000	0.000
12-Oct-2015	11:02:47	0.000	0.000
12-Oct-2015	11:06:47	0.000	0.000
12-Oct-2015	11:10:47	0.000	0.000
12-Oct-2015	11:14:47	0.000	0.000
12-Oct-2015	11:18:47	0.000	0.000
12-Oct-2015	11:22:47	0.000	0.000
12-Oct-2015	11:26:47	0.000	0.000
12-Oct-2015	11:30:47	0.000	0.000
12-Oct-2015	11:34:47	0.000	0.000
12-Oct-2015	11:38:47	0.000	0.000
12-Oct-2015	11:42:47	0.000	0.000
12-Oct-2015	11:46:47	0.000	0.000
12-Oct-2015	11:50:47	0.000	0.000
12-Oct-2015	11:54:47	0.000	0.000
12-Oct-2015	11:58:47	0.000	0.000
12-Oct-2015	12:02:47	0.000	0.000
12-Oct-2015	12:06:47	0.000	0.000
12-Oct-2015	12:10:47	0.000	0.000
12-Oct-2015	12:14:47	0.000	0.000
12-Oct-2015	12:18:47	0.000	0.000
12-Oct-2015	12:22:47	0.000	0.000
12-Oct-2015	12:26:47	0.000	0.000
12-Oct-2015	12:30:47	0.000	0.000
12-Oct-2015	12:34:47	0.000	0.000

DUST MONITORING

October 2015

shading indicates values over the threshold

Monitor: 2

Threshold: 0.15 (mg/m^3)

Date	Time	Value (mg/m^3)	TWA (mg/m^3)
12-Oct-2015	12:38:47	0.000	0.000
12-Oct-2015	12:42:47	0.000	0.000
12-Oct-2015	12:46:47	0.000	0.000
12-Oct-2015	12:50:47	0.000	0.000
12-Oct-2015	12:54:47	0.000	0.000
12-Oct-2015	12:58:47	0.000	0.000
12-Oct-2015	13:02:47	0.000	0.000
12-Oct-2015	13:06:47	0.000	0.000
12-Oct-2015	13:10:47	0.000	0.000
12-Oct-2015	13:14:47	0.000	0.000
12-Oct-2015	13:18:47	0.000	0.000
12-Oct-2015	13:22:47	0.000	0.000
12-Oct-2015	13:26:47	0.001	0.000
12-Oct-2015	13:30:47	0.000	0.000
12-Oct-2015	13:34:47	0.000	0.001
12-Oct-2015	13:38:47	0.002	0.001
12-Oct-2015	13:42:47	0.000	0.001
12-Oct-2015	13:46:47	0.000	0.000
12-Oct-2015	13:50:47	0.000	0.000
12-Oct-2015	13:54:47	0.000	0.000
12-Oct-2015	13:58:47	0.000	0.000
12-Oct-2015	14:02:47	0.001	0.000
12-Oct-2015	14:06:47	0.000	0.000
12-Oct-2015	14:10:47	0.000	0.000
12-Oct-2015	14:14:47	0.000	0.000
12-Oct-2015	14:18:47	0.000	0.000
12-Oct-2015	14:22:47	0.000	0.000
12-Oct-2015	14:26:47	0.000	0.000
12-Oct-2015	14:30:47	0.000	0.000
12-Oct-2015	14:34:47	0.000	0.000
12-Oct-2015	14:38:47	0.000	0.000
12-Oct-2015	14:42:47	0.001	0.000
12-Oct-2015	14:46:47	0.000	0.000
12-Oct-2015	14:50:47	0.000	0.000
12-Oct-2015	14:54:47	0.001	0.000
12-Oct-2015	14:58:47	0.000	0.000
12-Oct-2015	15:02:47	0.000	0.000
12-Oct-2015	15:06:47	0.000	0.000
12-Oct-2015	15:10:47	0.000	0.000
12-Oct-2015	15:14:47	0.000	0.000
12-Oct-2015	15:18:47	0.000	0.000

DUST MONITORING

October 2015

shading indicates values over the threshold

Monitor: 2

Threshold: 0.15 (mg/m^3)

Date	Time	Value (mg/m^3)	TWA (mg/m^3)
12-Oct-2015	15:22:47	0.000	0.000
12-Oct-2015	15:26:47	0.000	0.000
12-Oct-2015	15:30:47	0.000	0.000
12-Oct-2015	15:34:47	0.000	0.000
12-Oct-2015	15:38:47	0.000	0.000
12-Oct-2015	15:42:47	0.000	0.000
12-Oct-2015	15:46:47	0.000	0.000
12-Oct-2015	15:50:47	0.000	0.000
12-Oct-2015	15:54:47	0.001	0.001
12-Oct-2015	15:58:47	0.003	0.007
12-Oct-2015	16:02:47	0.016	0.012
12-Oct-2015	16:06:47	0.016	0.015
12-Oct-2015	16:10:47	0.012	0.014
14-Oct-2015	09:34:05	0.003	0.003
14-Oct-2015	09:38:05	0.002	0.002
14-Oct-2015	09:42:05	0.002	0.002
14-Oct-2015	09:46:05	0.002	0.003
14-Oct-2015	09:50:05	0.004	0.004
14-Oct-2015	09:54:05	0.006	0.005
14-Oct-2015	09:58:05	0.005	0.004
14-Oct-2015	10:02:05	0.000	0.010
14-Oct-2015	10:06:05	0.026	0.019
14-Oct-2015	10:10:05	0.031	0.020
14-Oct-2015	10:14:05	0.004	0.012
14-Oct-2015	10:18:05	0.000	0.014
14-Oct-2015	10:22:05	0.039	0.013
14-Oct-2015	10:26:05	0.000	0.013
14-Oct-2015	10:30:05	0.000	0.000
14-Oct-2015	10:34:05	0.001	0.000
14-Oct-2015	10:38:05	0.000	0.001
14-Oct-2015	10:42:05	0.002	0.008
14-Oct-2015	10:46:05	0.023	0.009
14-Oct-2015	10:50:05	0.001	0.009
14-Oct-2015	10:54:05	0.004	0.002
14-Oct-2015	10:58:05	0.000	0.001
14-Oct-2015	11:02:05	0.000	0.000
14-Oct-2015	11:06:05	0.000	0.000
14-Oct-2015	11:10:05	0.000	0.004
14-Oct-2015	11:14:05	0.012	0.005
14-Oct-2015	11:18:05	0.002	0.010
14-Oct-2015	11:22:05	0.016	0.020

DUST MONITORING

October 2015

shading indicates values over the threshold

Monitor: 2

Threshold: 0.15 (mg/m^3)

Date	Time	Value (mg/m^3)	TWA (mg/m^3)
14-Oct-2015	11:26:05	0.041	0.024
14-Oct-2015	11:30:05	0.015	0.019
14-Oct-2015	11:34:05	0.001	0.005
14-Oct-2015	11:38:05	0.000	0.000
14-Oct-2015	11:42:05	0.000	0.004
14-Oct-2015	11:46:05	0.011	0.011
14-Oct-2015	11:50:05	0.021	0.011
14-Oct-2015	11:54:05	0.000	0.007
14-Oct-2015	11:58:05	0.000	0.009
14-Oct-2015	12:02:05	0.026	0.009
14-Oct-2015	12:06:05	0.000	0.010
14-Oct-2015	12:10:05	0.004	0.005
14-Oct-2015	12:14:05	0.012	0.014
14-Oct-2015	12:18:05	0.026	0.014
14-Oct-2015	12:22:05	0.004	0.010
14-Oct-2015	12:26:05	0.000	0.001
14-Oct-2015	12:30:05	0.000	0.010
14-Oct-2015	12:34:05	0.031	0.017
14-Oct-2015	12:38:05	0.020	0.018
14-Oct-2015	12:42:05	0.002	0.015
14-Oct-2015	12:46:05	0.023	0.015
14-Oct-2015	12:50:05	0.021	0.015
14-Oct-2015	12:54:05	0.000	0.007
14-Oct-2015	12:58:05	0.000	0.000
14-Oct-2015	13:02:05	0.000	0.000
14-Oct-2015	13:06:05	0.000	0.007
14-Oct-2015	13:10:05	0.020	0.007
14-Oct-2015	13:14:05	0.000	0.007
14-Oct-2015	13:18:05	0.000	0.000
14-Oct-2015	13:22:05	0.000	0.000
14-Oct-2015	13:26:05	0.000	0.004
14-Oct-2015	13:30:05	0.011	0.005
14-Oct-2015	13:34:05	0.004	0.007
14-Oct-2015	13:38:05	0.007	0.004
14-Oct-2015	13:42:05	0.000	0.003
14-Oct-2015	13:46:05	0.001	0.000
14-Oct-2015	13:50:05	0.000	0.016
14-Oct-2015	13:54:05	0.046	0.023
14-Oct-2015	13:58:05	0.022	0.023
14-Oct-2015	14:02:05	0.002	0.008
14-Oct-2015	14:06:05	0.001	0.016

DUST MONITORING

October 2015

shading indicates values over the threshold

Monitor: 2

Threshold: 0.15 (mg/m^3)

Date	Time	Value (mg/m^3)	TWA (mg/m^3)
14-Oct-2015	14:10:05	0.044	0.020
14-Oct-2015	14:14:05	0.015	0.023
14-Oct-2015	14:18:05	0.011	0.010
14-Oct-2015	14:22:05	0.003	0.005
14-Oct-2015	14:26:05	0.000	0.001
14-Oct-2015	14:30:05	0.000	0.002
14-Oct-2015	14:34:05	0.007	0.002
14-Oct-2015	14:38:05	0.000	0.008
14-Oct-2015	14:42:05	0.017	0.024
14-Oct-2015	14:46:05	0.054	0.030
14-Oct-2015	14:50:05	0.018	0.029
14-Oct-2015	14:54:05	0.015	0.012
14-Oct-2015	14:58:05	0.004	0.008
14-Oct-2015	15:02:05	0.004	0.003
14-Oct-2015	15:06:05	0.002	0.002
14-Oct-2015	15:10:05	0.000	0.001
14-Oct-2015	15:14:05	0.000	0.007
14-Oct-2015	15:18:05	0.020	0.007
14-Oct-2015	15:22:05	0.000	0.010
14-Oct-2015	15:26:05	0.011	0.015
14-Oct-2015	15:30:05	0.035	0.015
14-Oct-2015	15:34:05	0.000	0.012
14-Oct-2015	15:38:05	0.000	0.000
14-Oct-2015	15:42:05	0.000	0.021
14-Oct-2015	15:46:05	0.064	0.031
14-Oct-2015	15:50:05	0.028	0.031
14-Oct-2015	15:54:05	0.000	0.009
14-Oct-2015	15:58:05	0.000	0.000
14-Oct-2015	16:02:05	0.000	0.000
14-Oct-2015	16:06:05	0.000	0.000
14-Oct-2015	16:10:05	0.000	0.000
14-Oct-2015	16:14:05	0.000	0.000
14-Oct-2015	16:18:05	0.000	0.000
14-Oct-2015	16:22:05	0.000	0.000
14-Oct-2015	16:26:05	0.000	0.000
14-Oct-2015	16:30:05	0.000	0.000
14-Oct-2015	16:34:05	0.000	0.000
14-Oct-2015	16:38:05	0.000	0.000
14-Oct-2015	16:42:05	0.000	0.000
14-Oct-2015	16:46:05	0.000	0.000
14-Oct-2015	16:50:05	0.000	0.000

DUST MONITORING

October 2015

shading indicates values over the threshold

Monitor: 2

Threshold: 0.15 (mg/m^3)

Date	Time	Value (mg/m^3)	TWA (mg/m^3)
14-Oct-2015	16:54:05	0.000	0.004
14-Oct-2015	16:58:05	0.011	0.004
14-Oct-2015	17:02:05	0.000	0.004
14-Oct-2015	17:06:05	0.000	0.000
14-Oct-2015	17:10:05	0.000	0.001
14-Oct-2015	17:14:05	0.004	0.006
14-Oct-2015	17:18:05	0.013	0.021
14-Oct-2015	17:22:05	0.047	0.043
14-Oct-2015	17:26:05	0.070	0.051
14-Oct-2015	17:30:05	0.035	0.053
15-Oct-2015	12:54:54	0.015	0.013
15-Oct-2015	12:58:54	0.011	0.011
15-Oct-2015	13:02:54	0.006	0.008
15-Oct-2015	13:06:54	0.008	0.007
15-Oct-2015	13:10:54	0.006	0.007
15-Oct-2015	13:14:54	0.007	0.007
15-Oct-2015	13:18:54	0.008	0.007
15-Oct-2015	13:22:54	0.007	0.007
15-Oct-2015	13:26:54	0.005	0.006
15-Oct-2015	13:30:54	0.005	0.006
15-Oct-2015	13:34:54	0.007	0.006
15-Oct-2015	13:38:54	0.005	0.023
15-Oct-2015	13:42:54	0.056	0.027
15-Oct-2015	13:46:54	0.020	0.027
15-Oct-2015	13:50:54	0.005	0.010
15-Oct-2015	13:54:54	0.006	0.005
15-Oct-2015	13:58:54	0.005	0.018
15-Oct-2015	14:02:54	0.042	0.023
15-Oct-2015	14:06:54	0.022	0.024
15-Oct-2015	14:10:54	0.008	0.046
15-Oct-2015	14:14:54	0.108	0.042
15-Oct-2015	14:18:54	0.011	0.042
15-Oct-2015	14:22:54	0.008	0.013
15-Oct-2015	14:26:54	0.020	0.012
15-Oct-2015	14:30:54	0.009	0.012
15-Oct-2015	14:34:54	0.008	0.009
15-Oct-2015	14:38:54	0.010	0.010
15-Oct-2015	14:42:54	0.013	0.021
15-Oct-2015	14:46:54	0.040	0.021
15-Oct-2015	14:50:54	0.010	0.019
15-Oct-2015	14:54:54	0.007	0.008

DUST MONITORING

October 2015

shading indicates values over the threshold

Monitor: 2

Threshold: 0.15 (mg/m^3)

Date	Time	Value (mg/m^3)	TWA (mg/m^3)
15-Oct-2015	14:58:54	0.006	0.006
15-Oct-2015	15:02:54	0.006	0.009
15-Oct-2015	15:06:54	0.015	0.026
15-Oct-2015	15:10:54	0.058	0.044
15-Oct-2015	15:14:54	0.058	0.042
15-Oct-2015	15:18:54	0.011	0.036
15-Oct-2015	15:22:54	0.038	0.030
15-Oct-2015	15:26:54	0.041	0.032
15-Oct-2015	15:30:54	0.017	0.038
15-Oct-2015	15:34:54	0.057	0.039
15-Oct-2015	15:38:54	0.043	0.040
15-Oct-2015	15:42:54	0.020	0.029
15-Oct-2015	15:46:54	0.025	0.037
15-Oct-2015	15:50:54	0.066	0.062
15-Oct-2015	15:54:54	0.094	0.056
15-Oct-2015	15:58:54	0.008	0.038
15-Oct-2015	16:02:54	0.011	0.009
15-Oct-2015	16:06:54	0.009	0.010
15-Oct-2015	16:10:54	0.010	0.010
15-Oct-2015	16:14:54	0.011	0.010
15-Oct-2015	16:18:54	0.009	0.016
15-Oct-2015	16:22:54	0.029	0.017
15-Oct-2015	16:26:54	0.013	0.016
15-Oct-2015	16:30:54	0.006	0.016
15-Oct-2015	16:34:54	0.028	0.022
15-Oct-2015	16:38:54	0.032	0.036
15-Oct-2015	16:42:54	0.049	0.041
15-Oct-2015	16:46:54	0.042	0.053
15-Oct-2015	16:50:54	0.068	0.051
15-Oct-2015	16:54:54	0.042	0.058
15-Oct-2015	16:58:54	0.064	0.046
15-Oct-2015	17:02:54	0.031	0.048
15-Oct-2015	17:06:54	0.048	0.042
15-Oct-2015	17:10:54	0.046	0.054
15-Oct-2015	17:14:54	0.068	0.062
15-Oct-2015	17:18:54	0.073	0.064
15-Oct-2015	17:22:54	0.052	0.052
15-Oct-2015	17:26:54	0.030	0.049
15-Oct-2015	17:30:54	0.065	0.045
15-Oct-2015	17:34:54	0.040	0.039
15-Oct-2015	17:38:54	0.012	0.023

DUST MONITORING

October 2015

shading indicates values over the threshold

Monitor: 2

Threshold: 0.15 (mg/m^3)

Date	Time	Value (mg/m^3)	TWA (mg/m^3)
15-Oct-2015	17:42:54	0.016	0.013
15-Oct-2015	17:46:54	0.011	0.022
15-Oct-2015	17:50:54	0.040	0.027
15-Oct-2015	17:54:54	0.029	0.025
15-Oct-2015	17:58:54	0.006	0.018
15-Oct-2015	18:02:54	0.020	0.014
15-Oct-2015	18:06:54	0.017	0.016
15-Oct-2015	18:10:54	0.010	0.033
15-Oct-2015	18:14:54	0.073	0.040
15-Oct-2015	18:18:54	0.036	0.047
15-Oct-2015	18:22:54	0.032	0.026
15-Oct-2015	18:26:54	0.011	0.022
16-Oct-2015	09:45:53	0.008	0.005
16-Oct-2015	09:49:53	0.002	0.004
16-Oct-2015	09:53:53	0.001	0.007
16-Oct-2015	09:57:53	0.018	0.009
16-Oct-2015	10:01:53	0.007	0.024
16-Oct-2015	10:05:53	0.047	0.018
16-Oct-2015	10:09:53	0.000	0.016
16-Oct-2015	10:13:53	0.001	0.004
16-Oct-2015	10:17:53	0.010	0.008
16-Oct-2015	10:21:53	0.012	0.008
16-Oct-2015	10:25:53	0.001	0.005
16-Oct-2015	10:29:53	0.001	0.002
16-Oct-2015	10:33:53	0.003	0.001
16-Oct-2015	10:37:53	0.000	0.001
16-Oct-2015	10:41:53	0.000	0.000
16-Oct-2015	10:45:53	0.000	0.000
16-Oct-2015	10:49:53	0.000	0.000
16-Oct-2015	10:53:53	0.001	0.000
16-Oct-2015	10:57:53	0.000	0.000
16-Oct-2015	11:01:53	0.000	0.000
16-Oct-2015	11:05:53	0.000	0.001
16-Oct-2015	11:09:53	0.004	0.001
16-Oct-2015	11:13:53	0.000	0.002
16-Oct-2015	11:17:53	0.001	0.003
16-Oct-2015	11:21:53	0.007	0.004
16-Oct-2015	11:25:53	0.005	0.005
16-Oct-2015	11:29:53	0.002	0.003
16-Oct-2015	11:33:53	0.001	0.001
16-Oct-2015	11:37:53	0.000	0.001

DUST MONITORING

October 2015

shading indicates values over the threshold

Monitor: 2

Threshold: 0.15 (mg/m^3)

Date	Time	Value (mg/m^3)	TWA (mg/m^3)
16-Oct-2015	11:41:53	0.001	0.000
16-Oct-2015	11:45:53	0.000	0.001
16-Oct-2015	11:49:53	0.003	0.001
16-Oct-2015	11:53:53	0.001	0.002
16-Oct-2015	11:57:53	0.001	0.001
16-Oct-2015	12:01:53	0.000	0.006
16-Oct-2015	12:05:53	0.018	0.007
16-Oct-2015	12:09:53	0.004	0.008
16-Oct-2015	12:13:53	0.001	0.002
16-Oct-2015	12:17:53	0.001	0.001
16-Oct-2015	12:21:53	0.000	0.002
16-Oct-2015	12:25:53	0.004	0.002
16-Oct-2015	12:29:53	0.001	0.002
16-Oct-2015	12:33:53	0.001	0.001
16-Oct-2015	12:37:53	0.000	0.000
16-Oct-2015	12:41:53	0.000	0.000
16-Oct-2015	12:45:53	0.001	0.001
16-Oct-2015	12:49:53	0.002	0.001
16-Oct-2015	12:53:53	0.001	0.004
16-Oct-2015	12:57:53	0.008	0.010
16-Oct-2015	13:01:53	0.022	0.010
16-Oct-2015	13:05:53	0.001	0.008
16-Oct-2015	13:09:53	0.001	0.004
16-Oct-2015	13:13:53	0.010	0.010
16-Oct-2015	13:17:53	0.019	0.012
16-Oct-2015	13:21:53	0.006	0.008
16-Oct-2015	13:25:53	0.000	0.002
16-Oct-2015	13:29:53	0.000	0.005
16-Oct-2015	13:33:53	0.016	0.005
16-Oct-2015	13:37:53	0.000	0.006
16-Oct-2015	13:41:53	0.003	0.003
16-Oct-2015	13:45:53	0.006	0.008
16-Oct-2015	13:49:53	0.014	0.009
16-Oct-2015	13:53:53	0.006	0.007
16-Oct-2015	13:57:53	0.001	0.006
16-Oct-2015	14:01:53	0.010	0.008
16-Oct-2015	14:05:53	0.012	0.008
16-Oct-2015	14:09:53	0.003	0.006
16-Oct-2015	14:13:53	0.004	0.012
16-Oct-2015	14:17:53	0.028	0.012
16-Oct-2015	14:21:53	0.004	0.012

DUST MONITORING

October 2015

shading indicates values over the threshold

Monitor: 2

Threshold: 0.15 (mg/m^3)

Date	Time	Value (mg/m^3)	TWA (mg/m^3)
16-Oct-2015	14:25:53	0.003	0.003
16-Oct-2015	14:29:53	0.002	0.003
16-Oct-2015	14:33:53	0.004	0.003
16-Oct-2015	14:37:53	0.002	0.003
16-Oct-2015	14:41:53	0.003	0.005
16-Oct-2015	14:45:53	0.009	0.005
16-Oct-2015	14:49:53	0.003	0.005
16-Oct-2015	14:53:53	0.002	0.002
16-Oct-2015	14:57:53	0.001	0.004
16-Oct-2015	15:01:53	0.010	0.004
16-Oct-2015	15:05:53	0.002	0.005
16-Oct-2015	15:09:53	0.002	0.002
16-Oct-2015	15:13:53	0.002	0.002
16-Oct-2015	15:17:53	0.003	0.004
16-Oct-2015	15:21:53	0.006	0.004
16-Oct-2015	15:25:53	0.003	0.004
16-Oct-2015	15:29:53	0.002	0.003
16-Oct-2015	15:33:53	0.003	0.002
16-Oct-2015	15:37:53	0.002	0.002
16-Oct-2015	15:41:53	0.001	0.002
16-Oct-2015	15:45:53	0.002	0.001
16-Oct-2015	15:49:53	0.001	0.001
16-Oct-2015	15:53:53	0.001	0.001
16-Oct-2015	15:57:53	0.002	0.001
16-Oct-2015	16:01:53	0.001	0.001
16-Oct-2015	16:05:53	0.001	0.001
19-Oct-2015	08:50:08	0.009	0.006
19-Oct-2015	08:54:08	0.003	0.004
19-Oct-2015	08:58:08	0.001	0.001
19-Oct-2015	09:02:08	0.000	0.003
19-Oct-2015	09:06:08	0.008	0.005
19-Oct-2015	09:10:08	0.006	0.006
19-Oct-2015	09:14:08	0.003	0.004
19-Oct-2015	09:18:08	0.004	0.002
19-Oct-2015	09:22:08	0.000	0.001
19-Oct-2015	09:26:08	0.000	0.000
19-Oct-2015	09:30:08	0.001	0.000
19-Oct-2015	09:34:08	0.000	0.000
19-Oct-2015	09:38:08	0.000	0.000
19-Oct-2015	09:42:08	0.000	0.000
19-Oct-2015	09:46:08	0.000	0.000

DUST MONITORING

October 2015

shading indicates values over the threshold

Monitor: 2

Threshold: 0.15 (mg/m^3)

Date	Time	Value (mg/m^3)	TWA (mg/m^3)
19-Oct-2015	09:50:08	0.001	0.001
19-Oct-2015	09:54:08	0.003	0.001
19-Oct-2015	09:58:08	0.000	0.001
19-Oct-2015	10:02:08	0.000	0.001
19-Oct-2015	10:06:08	0.002	0.001
19-Oct-2015	10:10:08	0.002	0.001
19-Oct-2015	10:14:08	0.000	0.001
19-Oct-2015	10:18:08	0.000	0.000
19-Oct-2015	10:22:08	0.000	0.000
19-Oct-2015	10:26:08	0.000	0.002
19-Oct-2015	10:30:08	0.006	0.002
19-Oct-2015	10:34:08	0.000	0.002
19-Oct-2015	10:38:08	0.000	0.002
19-Oct-2015	10:42:08	0.005	0.004
19-Oct-2015	10:46:08	0.008	0.004
19-Oct-2015	10:50:08	0.000	0.003
19-Oct-2015	10:54:08	0.001	0.003
19-Oct-2015	10:58:08	0.009	0.003
19-Oct-2015	11:02:08	0.000	0.003
19-Oct-2015	11:06:08	0.000	0.000
19-Oct-2015	11:10:08	0.000	0.001
19-Oct-2015	11:14:08	0.003	0.002
19-Oct-2015	11:18:08	0.003	0.003
19-Oct-2015	11:22:08	0.002	0.002
19-Oct-2015	11:26:08	0.000	0.001
19-Oct-2015	11:30:08	0.000	0.000
19-Oct-2015	11:34:08	0.000	0.000
19-Oct-2015	11:38:08	0.000	0.000
19-Oct-2015	11:42:08	0.000	0.054
19-Oct-2015	11:46:08	0.161	0.054
19-Oct-2015	11:50:08	0.000	0.054
19-Oct-2015	11:54:08	0.000	0.001
19-Oct-2015	11:58:08	0.003	0.027
19-Oct-2015	12:02:08	0.078	0.027
19-Oct-2015	12:06:08	0.000	0.026
19-Oct-2015	12:10:08	0.000	0.000
19-Oct-2015	12:14:08	0.001	0.001
19-Oct-2015	12:18:08	0.001	0.001
19-Oct-2015	12:22:08	0.000	0.000
19-Oct-2015	12:26:08	0.000	0.000
19-Oct-2015	12:30:08	0.000	0.000

DUST MONITORING

October 2015

shading indicates values over the threshold

Monitor: 2

Threshold: 0.15 (mg/m^3)

Date	Time	Value (mg/m^3)	TWA (mg/m^3)
19-Oct-2015	12:34:08	0.000	0.000
19-Oct-2015	12:38:08	0.001	0.001
19-Oct-2015	12:42:08	0.003	0.002
19-Oct-2015	12:46:08	0.001	0.001
19-Oct-2015	12:50:08	0.000	0.000
19-Oct-2015	12:54:08	0.000	0.004
19-Oct-2015	12:58:08	0.011	0.010
19-Oct-2015	13:02:08	0.019	0.011
19-Oct-2015	13:06:08	0.002	0.009
19-Oct-2015	13:10:08	0.006	0.003
19-Oct-2015	13:14:08	0.000	0.002
19-Oct-2015	13:18:08	0.001	0.009
19-Oct-2015	13:22:08	0.025	0.010
19-Oct-2015	13:26:08	0.003	0.011
19-Oct-2015	13:30:08	0.005	0.003
19-Oct-2015	13:34:08	0.002	0.006
19-Oct-2015	13:38:08	0.010	0.004
19-Oct-2015	13:42:08	0.001	0.005
19-Oct-2015	13:46:08	0.004	0.002
19-Oct-2015	13:50:08	0.002	0.003
19-Oct-2015	13:54:08	0.002	0.008
19-Oct-2015	13:58:08	0.020	0.008
19-Oct-2015	14:02:08	0.002	0.009
19-Oct-2015	14:06:08	0.006	0.004
19-Oct-2015	14:10:08	0.005	0.094
19-Oct-2015	14:14:08	0.272	0.093
19-Oct-2015	14:18:08	0.003	0.093
19-Oct-2015	14:22:08	0.005	0.004
19-Oct-2015	14:26:08	0.004	0.003
19-Oct-2015	14:30:08	0.001	0.003
19-Oct-2015	14:34:08	0.003	0.002
19-Oct-2015	14:38:08	0.003	0.002
19-Oct-2015	14:42:08	0.001	0.006
19-Oct-2015	14:46:08	0.014	0.023
19-Oct-2015	14:50:08	0.055	0.026
19-Oct-2015	14:54:08	0.008	0.047
19-Oct-2015	14:58:08	0.079	0.038
19-Oct-2015	15:02:08	0.027	0.036
19-Oct-2015	15:06:08	0.003	0.010
19-Oct-2015	15:10:08	0.001	0.002
19-Oct-2015	15:14:08	0.001	0.001

DUST MONITORING

October 2015

shading indicates values over the threshold

Monitor: 2

Threshold: 0.15 (mg/m^3)

Date	Time	Value (mg/m^3)	TWA (mg/m^3)
19-Oct-2015	15:18:08	0.001	0.002
19-Oct-2015	15:22:08	0.005	0.002
19-Oct-2015	15:26:08	0.001	0.002
19-Oct-2015	15:30:08	0.001	0.001
19-Oct-2015	15:34:08	0.002	0.002
19-Oct-2015	15:38:08	0.003	0.003
19-Oct-2015	15:42:08	0.005	0.004
19-Oct-2015	15:46:08	0.003	0.004
19-Oct-2015	15:50:08	0.004	0.004
20-Oct-2015	08:58:57	0.022	0.019
20-Oct-2015	09:02:57	0.016	0.013
20-Oct-2015	09:06:57	0.000	0.015
20-Oct-2015	09:10:57	0.030	0.024
20-Oct-2015	09:14:57	0.041	0.024
20-Oct-2015	09:18:57	0.000	0.014
20-Oct-2015	09:22:57	0.000	0.000
20-Oct-2015	09:26:57	0.000	0.000
20-Oct-2015	09:30:57	0.000	0.000
20-Oct-2015	09:34:57	0.000	0.000
21-Oct-2015	08:19:52	0.000	0.000
21-Oct-2015	08:23:52	0.000	0.000
21-Oct-2015	08:27:52	0.001	0.001
21-Oct-2015	08:31:52	0.001	0.001
21-Oct-2015	08:35:52	0.001	0.002
21-Oct-2015	08:39:52	0.003	0.003
21-Oct-2015	08:43:52	0.005	0.004
21-Oct-2015	08:47:52	0.003	0.004
21-Oct-2015	08:51:52	0.004	0.004
21-Oct-2015	08:55:52	0.005	0.004
21-Oct-2015	08:59:52	0.004	0.004
21-Oct-2015	09:03:52	0.004	0.005
21-Oct-2015	09:07:52	0.006	0.006
21-Oct-2015	09:11:52	0.009	0.007
21-Oct-2015	09:15:52	0.005	0.006
21-Oct-2015	09:19:52	0.005	0.005
21-Oct-2015	09:23:52	0.005	0.005
21-Oct-2015	09:27:52	0.006	0.006
21-Oct-2015	09:31:52	0.006	0.006
21-Oct-2015	09:35:52	0.007	0.006
21-Oct-2015	09:39:52	0.006	0.006
21-Oct-2015	09:43:52	0.006	0.008

DUST MONITORING

October 2015

shading indicates values over the threshold

Monitor: 2

Threshold: 0.15 (mg/m^3)

Date	Time	Value (mg/m^3)	TWA (mg/m^3)
21-Oct-2015	09:47:52	0.011	0.008
21-Oct-2015	09:51:52	0.008	0.010
21-Oct-2015	09:55:52	0.011	0.009
21-Oct-2015	09:59:52	0.007	0.008
21-Oct-2015	10:03:52	0.007	0.007
21-Oct-2015	10:07:52	0.007	0.007
21-Oct-2015	10:11:52	0.008	0.008
21-Oct-2015	10:15:52	0.009	0.009
21-Oct-2015	10:19:52	0.009	0.009
21-Oct-2015	10:23:52	0.010	0.009
21-Oct-2015	10:27:52	0.008	0.009
21-Oct-2015	10:31:52	0.010	0.011
21-Oct-2015	10:35:52	0.014	0.011
21-Oct-2015	10:39:52	0.010	0.011
21-Oct-2015	10:43:52	0.010	0.010
21-Oct-2015	10:47:52	0.010	0.010
21-Oct-2015	10:51:52	0.011	0.011
21-Oct-2015	10:55:52	0.012	0.011
21-Oct-2015	10:59:52	0.011	0.012
21-Oct-2015	11:03:52	0.012	0.012
21-Oct-2015	11:07:52	0.012	0.012
21-Oct-2015	11:11:52	0.013	0.013
21-Oct-2015	11:15:52	0.014	0.014
21-Oct-2015	11:19:52	0.014	0.014
21-Oct-2015	11:23:52	0.015	0.015
21-Oct-2015	11:27:52	0.016	0.016
21-Oct-2015	11:31:52	0.016	0.016
21-Oct-2015	11:35:52	0.015	0.016
22-Oct-2015	07:14:28	0.000	0.000
22-Oct-2015	07:18:28	0.000	0.000
22-Oct-2015	07:22:28	0.000	0.005
22-Oct-2015	07:26:28	0.015	0.006
22-Oct-2015	07:30:28	0.004	0.006
22-Oct-2015	07:34:28	0.000	0.002
22-Oct-2015	07:38:28	0.001	0.002
22-Oct-2015	07:42:28	0.005	0.002
22-Oct-2015	07:46:28	0.000	0.002
22-Oct-2015	07:50:28	0.001	0.000
22-Oct-2015	07:54:28	0.000	0.000
22-Oct-2015	07:58:28	0.000	0.000
22-Oct-2015	08:02:28	0.000	0.000

DUST MONITORING

October 2015

shading indicates values over the threshold

Monitor: 2

Threshold: 0.15 (mg/m^3)

Date	Time	Value (mg/m^3)	TWA (mg/m^3)
22-Oct-2015	08:06:28	0.000	0.000
22-Oct-2015	08:10:28	0.000	0.000
22-Oct-2015	08:14:28	0.000	0.000
22-Oct-2015	08:18:28	0.000	0.000
22-Oct-2015	08:22:28	0.000	0.000
22-Oct-2015	08:26:28	0.000	0.000
22-Oct-2015	08:30:28	0.000	0.000
22-Oct-2015	08:34:28	0.000	0.000
22-Oct-2015	08:38:28	0.000	0.000
22-Oct-2015	08:42:28	0.000	0.000
22-Oct-2015	08:46:28	0.000	0.000
22-Oct-2015	08:50:28	0.000	0.000
22-Oct-2015	08:54:28	0.000	0.000
22-Oct-2015	08:58:28	0.000	0.000
22-Oct-2015	09:02:28	0.000	0.000
22-Oct-2015	09:06:28	0.000	0.000
22-Oct-2015	09:10:28	0.000	0.000
22-Oct-2015	09:14:28	0.001	0.000
22-Oct-2015	09:18:28	0.000	0.000
22-Oct-2015	09:22:28	0.000	0.004
22-Oct-2015	09:26:28	0.013	0.004
22-Oct-2015	09:30:28	0.000	0.004
22-Oct-2015	09:34:28	0.000	0.000
22-Oct-2015	09:38:28	0.000	0.000
22-Oct-2015	09:42:28	0.000	0.000
22-Oct-2015	09:46:28	0.000	0.000
22-Oct-2015	09:50:28	0.000	0.000
22-Oct-2015	09:54:28	0.000	0.000
22-Oct-2015	09:58:28	0.000	0.000
22-Oct-2015	10:02:28	0.000	0.000
22-Oct-2015	10:06:28	0.000	0.000
22-Oct-2015	10:10:28	0.000	0.000
22-Oct-2015	10:14:28	0.000	0.000
22-Oct-2015	10:18:28	0.000	0.000
22-Oct-2015	10:22:28	0.000	0.000
22-Oct-2015	10:26:28	0.000	0.000
22-Oct-2015	10:30:28	0.000	0.000
22-Oct-2015	10:34:28	0.000	0.000
22-Oct-2015	10:38:28	0.000	0.000
22-Oct-2015	10:42:28	0.000	0.000
22-Oct-2015	10:46:28	0.000	0.001

DUST MONITORING

October 2015

shading indicates values over the threshold

Monitor: 2

Threshold: 0.15 (mg/m^3)

Date	Time	Value (mg/m^3)	TWA (mg/m^3)
22-Oct-2015	10:50:28	0.003	0.003
22-Oct-2015	10:54:28	0.005	0.003
22-Oct-2015	10:58:28	0.000	0.002
22-Oct-2015	11:02:28	0.000	0.000
22-Oct-2015	11:06:28	0.000	0.000
22-Oct-2015	11:10:28	0.000	0.000
22-Oct-2015	11:14:28	0.000	0.000
22-Oct-2015	11:18:28	0.000	0.000
22-Oct-2015	11:22:28	0.000	0.000
22-Oct-2015	11:26:28	0.000	0.001
22-Oct-2015	11:30:28	0.002	0.001
22-Oct-2015	11:34:28	0.000	0.004
22-Oct-2015	11:38:28	0.009	0.003
22-Oct-2015	11:42:28	0.001	0.003
22-Oct-2015	11:46:28	0.000	0.000
22-Oct-2015	11:50:28	0.000	0.000
22-Oct-2015	11:54:28	0.001	0.000
22-Oct-2015	11:58:28	0.000	0.000
22-Oct-2015	12:02:28	0.000	0.000
22-Oct-2015	12:06:28	0.000	0.000
22-Oct-2015	12:10:28	0.000	0.006
22-Oct-2015	12:14:28	0.019	0.006
22-Oct-2015	12:18:28	0.000	0.006
22-Oct-2015	12:22:28	0.000	0.000
22-Oct-2015	12:26:28	0.000	0.000
22-Oct-2015	12:30:28	0.000	0.000
22-Oct-2015	12:34:28	0.000	0.000
22-Oct-2015	12:38:28	0.000	0.000
22-Oct-2015	12:42:28	0.000	0.000
22-Oct-2015	12:46:28	0.000	0.000
22-Oct-2015	12:50:28	0.000	0.000
22-Oct-2015	12:54:28	0.000	0.000
22-Oct-2015	12:58:28	0.000	0.000
22-Oct-2015	13:02:28	0.000	0.000
22-Oct-2015	13:06:28	0.000	0.000
22-Oct-2015	13:10:28	0.000	0.000
22-Oct-2015	13:14:28	0.001	0.001
22-Oct-2015	13:18:28	0.001	0.001
22-Oct-2015	13:22:28	0.000	0.000
22-Oct-2015	13:26:28	0.000	0.000
22-Oct-2015	13:30:28	0.000	0.000

DUST MONITORING

October 2015

shading indicates values over the threshold

Monitor: 2

Threshold: 0.15 (mg/m^3)

Date	Time	Value (mg/m^3)	TWA (mg/m^3)
22-Oct-2015	13:34:28	0.000	0.000
22-Oct-2015	13:38:28	0.000	0.002
22-Oct-2015	13:42:28	0.006	0.002
22-Oct-2015	13:46:28	0.000	0.002
22-Oct-2015	13:50:28	0.000	0.000
22-Oct-2015	13:54:28	0.000	0.000
22-Oct-2015	13:58:28	0.000	0.000
22-Oct-2015	14:02:28	0.000	0.000
22-Oct-2015	14:06:28	0.000	0.000
22-Oct-2015	14:10:28	0.000	0.000
22-Oct-2015	14:14:28	0.000	0.000
22-Oct-2015	14:18:28	0.000	0.001
22-Oct-2015	14:22:28	0.002	0.001
22-Oct-2015	14:26:28	0.000	0.001
22-Oct-2015	14:30:28	0.000	0.000
22-Oct-2015	14:34:28	0.000	0.000
22-Oct-2015	14:38:28	0.000	0.013
22-Oct-2015	14:42:28	0.039	0.014
22-Oct-2015	14:46:28	0.004	0.024
22-Oct-2015	14:50:28	0.028	0.013
22-Oct-2015	14:54:28	0.006	0.017
22-Oct-2015	14:58:28	0.017	0.021
22-Oct-2015	15:02:28	0.041	0.042
22-Oct-2015	15:06:28	0.069	0.037
22-Oct-2015	15:10:28	0.002	0.024
22-Oct-2015	15:14:28	0.000	0.015
22-Oct-2015	15:18:28	0.043	0.018
22-Oct-2015	15:22:28	0.012	0.018
22-Oct-2015	15:26:28	0.000	0.004
22-Oct-2015	15:30:28	0.000	0.000
22-Oct-2015	15:34:28	0.000	0.000
22-Oct-2015	15:38:28	0.000	0.000
22-Oct-2015	15:42:28	0.000	0.002
22-Oct-2015	15:46:28	0.006	0.052
22-Oct-2015	15:50:28	0.150	0.055
22-Oct-2015	15:54:28	0.009	0.057
22-Oct-2015	15:58:28	0.013	0.021
22-Oct-2015	16:02:28	0.040	0.018
22-Oct-2015	16:06:28	0.000	0.013
22-Oct-2015	16:10:28	0.000	0.000
22-Oct-2015	16:14:28	0.000	0.000

DUST MONITORING

October 2015

shading indicates values over the threshold

Monitor: 2

Threshold: 0.15 (mg/m^3)

Date	Time	Value (mg/m^3)	TWA (mg/m^3)
22-Oct-2015	16:18:28	0.000	0.000
22-Oct-2015	16:22:28	0.000	0.000
22-Oct-2015	16:26:28	0.000	0.000
22-Oct-2015	16:30:28	0.000	0.000
22-Oct-2015	16:34:28	0.000	0.000
22-Oct-2015	16:38:28	0.000	0.012
22-Oct-2015	16:42:28	0.035	0.012
22-Oct-2015	16:46:28	0.000	0.012
22-Oct-2015	16:50:28	0.000	0.000
22-Oct-2015	16:54:28	0.000	0.000
22-Oct-2015	16:58:28	0.000	0.001
22-Oct-2015	17:02:28	0.002	0.001
22-Oct-2015	17:06:28	0.001	0.002
22-Oct-2015	17:10:28	0.003	0.001
22-Oct-2015	17:14:28	0.000	0.002
22-Oct-2015	17:18:28	0.003	0.015
22-Oct-2015	17:22:28	0.041	0.015
22-Oct-2015	17:26:28	0.002	0.015
22-Oct-2015	17:30:28	0.001	0.001
22-Oct-2015	17:34:28	0.000	0.000
22-Oct-2015	17:38:28	0.000	0.000
22-Oct-2015	17:42:28	0.000	0.000
22-Oct-2015	17:46:28	0.000	0.000
22-Oct-2015	17:50:28	0.000	0.000
22-Oct-2015	17:54:28	0.000	0.000
22-Oct-2015	17:58:28	0.001	0.001
22-Oct-2015	18:02:28	0.002	0.002
22-Oct-2015	18:06:28	0.004	0.004
22-Oct-2015	18:10:28	0.006	0.004
22-Oct-2015	18:14:28	0.003	0.004
22-Oct-2015	18:18:28	0.003	0.003
22-Oct-2015	18:22:28	0.004	0.003
22-Oct-2015	18:26:28	0.002	0.003
22-Oct-2015	18:30:28	0.002	0.002
22-Oct-2015	18:34:28	0.002	0.002
22-Oct-2015	18:38:28	0.001	0.002
22-Oct-2015	18:42:28	0.002	0.002
22-Oct-2015	18:46:28	0.002	0.002
22-Oct-2015	18:50:28	0.003	0.002
22-Oct-2015	18:54:28	0.002	0.003
22-Oct-2015	18:58:28	0.003	0.003

DUST MONITORING

October 2015

shading indicates values over the threshold

Monitor: 2

Threshold: 0.15 (mg/m^3)

Date	Time	Value (mg/m^3)	TWA (mg/m^3)
22-Oct-2015	19:02:28	0.004	0.004
22-Oct-2015	19:06:28	0.004	0.005
22-Oct-2015	19:10:28	0.006	0.005
22-Oct-2015	19:14:28	0.005	0.006
22-Oct-2015	19:18:28	0.006	0.006
22-Oct-2015	19:22:28	0.007	0.007
22-Oct-2015	19:26:28	0.007	0.007
22-Oct-2015	19:30:28	0.008	0.008
22-Oct-2015	19:34:28	0.009	0.008
22-Oct-2015	19:38:28	0.008	0.008
22-Oct-2015	19:42:28	0.008	0.008
22-Oct-2015	19:46:28	0.009	0.009
22-Oct-2015	19:50:28	0.010	0.009
22-Oct-2015	19:54:28	0.009	0.009
22-Oct-2015	19:58:28	0.009	0.009
22-Oct-2015	20:02:28	0.009	0.009
22-Oct-2015	20:06:28	0.010	0.010
22-Oct-2015	20:10:28	0.010	0.010
22-Oct-2015	20:14:28	0.009	0.010
22-Oct-2015	20:18:28	0.010	0.010
22-Oct-2015	20:22:28	0.010	0.010
22-Oct-2015	20:26:28	0.010	0.010
22-Oct-2015	20:30:28	0.010	0.010
22-Oct-2015	20:34:28	0.011	0.011
22-Oct-2015	20:38:28	0.011	0.011
22-Oct-2015	20:42:28	0.011	0.011
22-Oct-2015	20:46:28	0.011	0.011
22-Oct-2015	20:50:28	0.011	0.011
23-Oct-2015	07:09:07	0.042	0.038
23-Oct-2015	07:13:07	0.034	0.038
23-Oct-2015	07:17:07	0.039	0.050
23-Oct-2015	07:21:07	0.078	0.057
23-Oct-2015	07:25:07	0.054	0.046
23-Oct-2015	07:29:07	0.005	0.039
23-Oct-2015	07:33:07	0.057	0.033
23-Oct-2015	07:37:07	0.037	0.063
23-Oct-2015	07:41:07	0.096	0.071
23-Oct-2015	07:45:07	0.080	0.072
23-Oct-2015	07:49:07	0.040	0.053
23-Oct-2015	07:53:07	0.040	0.040
23-Oct-2015	07:57:07	0.040	0.039

DUST MONITORING

October 2015

shading indicates values over the threshold

Monitor: 2

Threshold: 0.15 (mg/m^3)

Date	Time	Value (mg/m^3)	TWA (mg/m^3)
23-Oct-2015	08:01:07	0.037	0.037
23-Oct-2015	08:05:07	0.035	0.032
23-Oct-2015	08:09:07	0.023	0.026
23-Oct-2015	08:13:07	0.021	0.020
23-Oct-2015	08:17:07	0.015	0.016
23-Oct-2015	08:21:07	0.013	0.013
23-Oct-2015	08:25:07	0.012	0.013
23-Oct-2015	08:29:07	0.015	0.013
23-Oct-2015	08:33:07	0.012	0.013
23-Oct-2015	08:37:07	0.011	0.012
23-Oct-2015	08:41:07	0.013	0.012
23-Oct-2015	08:45:07	0.012	0.013
23-Oct-2015	08:49:07	0.013	0.012
23-Oct-2015	08:53:07	0.012	0.012
23-Oct-2015	08:57:07	0.010	0.015
23-Oct-2015	09:01:07	0.022	0.014
23-Oct-2015	09:05:07	0.011	0.014
23-Oct-2015	09:09:07	0.010	0.011
23-Oct-2015	09:13:07	0.011	0.012
23-Oct-2015	09:17:07	0.014	0.014
23-Oct-2015	09:21:07	0.018	0.018
23-Oct-2015	09:25:07	0.022	0.021
23-Oct-2015	09:29:07	0.022	0.022
23-Oct-2015	09:33:07	0.022	0.022
23-Oct-2015	09:37:07	0.022	0.022
23-Oct-2015	09:41:07	0.022	0.023
23-Oct-2015	09:45:07	0.025	0.023
23-Oct-2015	09:49:07	0.021	0.022
23-Oct-2015	09:53:07	0.021	0.021
23-Oct-2015	09:57:07	0.020	0.020
23-Oct-2015	10:01:07	0.019	0.019
23-Oct-2015	10:05:07	0.019	0.019
23-Oct-2015	10:09:07	0.019	0.019
23-Oct-2015	10:13:07	0.019	0.019
23-Oct-2015	10:17:07	0.018	0.020
23-Oct-2015	10:21:07	0.023	0.021
23-Oct-2015	10:25:07	0.023	0.023
23-Oct-2015	10:29:07	0.024	0.022
23-Oct-2015	10:33:07	0.020	0.021
23-Oct-2015	10:37:07	0.018	0.018
23-Oct-2015	10:41:07	0.017	0.018

DUST MONITORING

October 2015

shading indicates values over the threshold

Monitor: 2

Threshold: 0.15 (mg/m^3)

Date	Time	Value (mg/m^3)	TWA (mg/m^3)
23-Oct-2015	10:45:07	0.019	0.018
23-Oct-2015	10:49:07	0.017	0.018
23-Oct-2015	10:53:07	0.017	0.017
23-Oct-2015	10:57:07	0.017	0.017
23-Oct-2015	11:01:07	0.016	0.020
23-Oct-2015	11:05:07	0.027	0.021
23-Oct-2015	11:09:07	0.020	0.022
23-Oct-2015	11:13:07	0.019	0.019
23-Oct-2015	11:17:07	0.017	0.018
23-Oct-2015	11:21:07	0.017	0.017
23-Oct-2015	11:25:07	0.017	0.017
23-Oct-2015	11:29:07	0.018	0.017
23-Oct-2015	11:33:07	0.017	0.017
23-Oct-2015	11:37:07	0.017	0.018
23-Oct-2015	11:41:07	0.020	0.029
23-Oct-2015	11:45:07	0.049	0.028
23-Oct-2015	11:49:07	0.016	0.026
23-Oct-2015	11:53:07	0.013	0.026
23-Oct-2015	11:57:07	0.050	0.037
23-Oct-2015	12:01:07	0.047	0.035
23-Oct-2015	12:05:07	0.007	0.020
23-Oct-2015	12:09:07	0.007	0.018
23-Oct-2015	12:13:07	0.039	0.045
23-Oct-2015	12:17:07	0.090	0.093
23-Oct-2015	12:21:07	0.151	0.087
23-Oct-2015	12:25:07	0.020	0.061
23-Oct-2015	12:29:07	0.012	0.015
23-Oct-2015	12:33:07	0.013	0.012
23-Oct-2015	12:37:07	0.011	0.011
23-Oct-2015	12:41:07	0.010	0.013
23-Oct-2015	12:45:07	0.018	0.013
23-Oct-2015	12:49:07	0.011	0.056
23-Oct-2015	12:53:07	0.138	0.056
23-Oct-2015	12:57:07	0.018	0.059
23-Oct-2015	13:01:07	0.021	0.017
23-Oct-2015	13:05:07	0.012	0.015
23-Oct-2015	13:09:07	0.011	0.013
23-Oct-2015	13:13:07	0.017	0.013
23-Oct-2015	13:17:07	0.011	0.013
23-Oct-2015	13:21:07	0.010	0.010
23-Oct-2015	13:25:07	0.009	0.010

DUST MONITORING

October 2015

shading indicates values over the threshold

Monitor: **2**

Threshold: **0.15 (mg/m^3)**

Date	Time	Value (mg/m^3)	TWA (mg/m^3)
23-Oct-2015	13:29:07	0.010	0.019
23-Oct-2015	13:33:07	0.039	0.020
23-Oct-2015	13:37:07	0.011	0.020
23-Oct-2015	13:41:07	0.010	0.010
23-Oct-2015	13:45:07	0.010	0.010
23-Oct-2015	13:49:07	0.010	0.010
23-Oct-2015	13:53:07	0.011	0.010
23-Oct-2015	13:57:07	0.010	0.010
23-Oct-2015	14:01:07	0.009	0.014
23-Oct-2015	14:05:07	0.022	0.016

DUST MONITORING

October 2015

shading indicates values over the threshold

Monitor: 3

Threshold: 0.15 (mg/m^3)

Date	Time	Value (mg/m^3)	TWA (mg/m^3)
5-Oct-2015	07:17:54	0.002	0.001
5-Oct-2015	07:21:54	0.000	0.001
5-Oct-2015	07:25:54	0.000	0.000
5-Oct-2015	07:29:54	0.000	0.000
5-Oct-2015	07:33:54	0.000	0.000
5-Oct-2015	07:37:54	0.000	0.000
5-Oct-2015	07:41:54	0.000	0.000
5-Oct-2015	07:45:54	0.000	0.000
5-Oct-2015	07:49:54	0.000	0.000
5-Oct-2015	07:53:54	0.000	0.000
5-Oct-2015	07:57:54	0.000	0.000
5-Oct-2015	08:01:54	0.000	0.000
5-Oct-2015	08:05:54	0.000	0.000
5-Oct-2015	08:09:54	0.000	0.000
5-Oct-2015	08:13:54	0.000	0.000
5-Oct-2015	08:17:54	0.000	0.000
5-Oct-2015	08:21:54	0.000	0.000
5-Oct-2015	08:25:54	0.000	0.000
5-Oct-2015	08:29:54	0.000	0.000
5-Oct-2015	08:33:54	0.000	0.000
5-Oct-2015	08:37:54	0.000	0.000
5-Oct-2015	08:41:54	0.000	0.000
5-Oct-2015	08:45:54	0.000	0.000
5-Oct-2015	08:49:54	0.000	0.000
5-Oct-2015	08:53:54	0.000	0.000
5-Oct-2015	08:57:54	0.001	0.000
5-Oct-2015	09:01:54	0.000	0.000
5-Oct-2015	09:05:54	0.000	0.000
5-Oct-2015	09:09:54	0.000	0.000
5-Oct-2015	09:13:54	0.000	0.000
5-Oct-2015	09:17:54	0.000	0.000
5-Oct-2015	09:21:54	0.000	0.000
5-Oct-2015	09:25:54	0.000	0.000
5-Oct-2015	09:29:54	0.000	0.000
5-Oct-2015	09:33:54	0.000	0.001
5-Oct-2015	09:37:54	0.003	0.001
5-Oct-2015	09:41:54	0.000	0.001
5-Oct-2015	09:45:54	0.000	0.000
5-Oct-2015	09:49:54	0.000	0.000
5-Oct-2015	09:53:54	0.000	0.000
5-Oct-2015	09:57:54	0.000	0.000

DUST MONITORING

October 2015

shading indicates values over the threshold

Monitor: 3

Threshold: 0.15 (mg/m^3)

Date	Time	Value (mg/m^3)	TWA (mg/m^3)
5-Oct-2015	10:01:54	0.000	0.000
5-Oct-2015	10:05:54	0.000	0.000
5-Oct-2015	10:09:54	0.000	0.000
5-Oct-2015	10:13:54	0.000	0.000
5-Oct-2015	10:17:54	0.000	0.000
5-Oct-2015	10:21:54	0.000	0.000
5-Oct-2015	10:25:54	0.000	0.000
5-Oct-2015	10:29:54	0.000	0.000
5-Oct-2015	10:33:54	0.000	0.000
5-Oct-2015	10:37:54	0.000	0.000
5-Oct-2015	10:41:54	0.000	0.000
5-Oct-2015	10:45:54	0.000	0.000
5-Oct-2015	10:49:54	0.000	0.000
5-Oct-2015	10:53:54	0.000	0.000
5-Oct-2015	10:57:54	0.000	0.000
5-Oct-2015	11:01:54	0.000	0.000
5-Oct-2015	11:05:54	0.000	0.000
5-Oct-2015	11:09:54	0.000	0.000
5-Oct-2015	11:13:54	0.000	0.000
5-Oct-2015	11:17:54	0.000	0.000
5-Oct-2015	11:21:54	0.000	0.000
5-Oct-2015	11:25:54	0.000	0.000
5-Oct-2015	11:29:54	0.000	0.000
5-Oct-2015	11:33:54	0.000	0.000
5-Oct-2015	11:37:54	0.000	0.000
5-Oct-2015	11:41:54	0.000	0.000
5-Oct-2015	11:45:54	0.000	0.000
5-Oct-2015	11:49:54	0.000	0.000
5-Oct-2015	11:53:54	0.000	0.000
5-Oct-2015	11:57:54	0.000	0.000
5-Oct-2015	12:01:54	0.000	0.000
5-Oct-2015	12:05:54	0.000	0.000
5-Oct-2015	12:09:54	0.000	0.000
5-Oct-2015	12:13:54	0.000	0.000
5-Oct-2015	12:17:54	0.000	0.000
5-Oct-2015	12:21:54	0.000	0.000
5-Oct-2015	12:25:54	0.000	0.000
5-Oct-2015	12:29:54	0.000	0.000
5-Oct-2015	12:33:54	0.000	0.000
5-Oct-2015	12:37:54	0.000	0.001
5-Oct-2015	12:41:54	0.002	0.001

DUST MONITORING

October 2015

shading indicates values over the threshold

Monitor: 3

Threshold: 0.15 (mg/m^3)

Date	Time	Value (mg/m^3)	TWA (mg/m^3)
5-Oct-2015	12:45:54	0.000	0.001
5-Oct-2015	12:49:54	0.000	0.000
5-Oct-2015	12:53:54	0.000	0.000
5-Oct-2015	12:57:54	0.000	0.000
5-Oct-2015	13:01:54	0.000	0.000
5-Oct-2015	13:05:54	0.000	0.000
5-Oct-2015	13:09:54	0.000	0.000
5-Oct-2015	13:13:54	0.000	0.000
5-Oct-2015	13:17:54	0.000	0.000
5-Oct-2015	13:21:54	0.000	0.000
5-Oct-2015	13:25:54	0.000	0.016
5-Oct-2015	13:29:54	0.049	0.101
5-Oct-2015	13:33:54	0.255	0.107
5-Oct-2015	13:37:54	0.017	0.095
5-Oct-2015	13:41:54	0.012	0.011
5-Oct-2015	13:45:54	0.005	0.006
5-Oct-2015	13:49:54	0.000	0.004
5-Oct-2015	13:53:54	0.006	0.002
5-Oct-2015	13:57:54	0.000	0.003
5-Oct-2015	14:01:54	0.002	0.003
5-Oct-2015	14:05:54	0.006	0.003
5-Oct-2015	14:09:54	0.001	0.002
5-Oct-2015	14:13:54	0.000	0.000
5-Oct-2015	14:17:54	0.000	0.000
5-Oct-2015	14:21:54	0.000	0.000
5-Oct-2015	14:25:54	0.000	0.000
5-Oct-2015	14:29:54	0.000	0.000
5-Oct-2015	14:33:54	0.000	0.000
5-Oct-2015	14:37:54	0.001	0.000
5-Oct-2015	14:41:54	0.000	0.000
5-Oct-2015	14:45:54	0.000	0.000
5-Oct-2015	14:49:54	0.000	0.000
5-Oct-2015	14:53:54	0.000	0.000
5-Oct-2015	14:57:54	0.000	0.000
5-Oct-2015	15:01:54	0.000	0.000
5-Oct-2015	15:05:54	0.000	0.000
5-Oct-2015	15:09:54	0.000	0.000
5-Oct-2015	15:13:54	0.000	0.000
5-Oct-2015	15:17:54	0.000	0.000
5-Oct-2015	15:21:54	0.000	0.000
5-Oct-2015	15:25:54	0.000	0.000

DUST MONITORING

October 2015

shading indicates values over the threshold

Monitor: 3

Threshold: 0.15 (mg/m^3)

Date	Time	Value (mg/m^3)	TWA (mg/m^3)
5-Oct-2015	15:29:54	0.001	0.000
5-Oct-2015	15:33:54	0.000	0.000
5-Oct-2015	15:37:54	0.000	0.000
5-Oct-2015	15:41:54	0.000	0.000
6-Oct-2015	07:17:34	0.000	0.000
6-Oct-2015	07:21:34	0.000	0.000
6-Oct-2015	07:25:34	0.000	0.000
6-Oct-2015	07:29:34	0.000	0.000
6-Oct-2015	07:33:34	0.000	0.000
6-Oct-2015	07:37:34	0.000	0.000
6-Oct-2015	07:41:34	0.000	0.000
6-Oct-2015	07:45:34	0.000	0.000
6-Oct-2015	07:49:34	0.000	0.000
6-Oct-2015	07:53:34	0.000	0.000
6-Oct-2015	07:57:34	0.000	0.000
6-Oct-2015	08:01:34	0.000	0.000
6-Oct-2015	08:05:34	0.000	0.000
6-Oct-2015	08:09:34	0.000	0.000
6-Oct-2015	08:13:34	0.000	0.000
6-Oct-2015	08:17:34	0.000	0.000
6-Oct-2015	08:21:34	0.000	0.000
6-Oct-2015	08:25:34	0.000	0.000
6-Oct-2015	08:29:34	0.000	0.000
6-Oct-2015	08:33:34	0.000	0.000
6-Oct-2015	08:37:34	0.000	0.000
6-Oct-2015	08:41:34	0.000	0.000
6-Oct-2015	08:45:34	0.000	0.000
6-Oct-2015	08:49:34	0.000	0.000
6-Oct-2015	08:53:34	0.000	0.000
6-Oct-2015	08:57:34	0.000	0.000
6-Oct-2015	09:01:34	0.000	0.000
6-Oct-2015	09:05:34	0.000	0.000
6-Oct-2015	09:09:34	0.000	0.000
6-Oct-2015	09:13:34	0.000	0.000
6-Oct-2015	09:17:34	0.000	0.000
6-Oct-2015	09:21:34	0.000	0.000
6-Oct-2015	09:25:34	0.000	0.000
6-Oct-2015	09:29:34	0.000	0.000
6-Oct-2015	09:33:34	0.000	0.000
6-Oct-2015	09:37:34	0.000	0.000
6-Oct-2015	09:41:34	0.000	0.000

DUST MONITORING

October 2015

shading indicates values over the threshold

Monitor: 3

Threshold: 0.15 (mg/m^3)

Date	Time	Value (mg/m^3)	TWA (mg/m^3)
6-Oct-2015	09:45:34	0.000	0.000
6-Oct-2015	09:49:34	0.000	0.000
6-Oct-2015	09:53:34	0.000	0.000
6-Oct-2015	09:57:34	0.000	0.000
6-Oct-2015	10:01:34	0.000	0.000
6-Oct-2015	10:05:34	0.000	0.000
6-Oct-2015	10:09:34	0.000	0.000
6-Oct-2015	10:13:34	0.000	0.000
6-Oct-2015	10:17:34	0.000	0.000
6-Oct-2015	10:21:34	0.000	0.000
6-Oct-2015	10:25:34	0.000	0.000
6-Oct-2015	10:29:34	0.000	0.000
6-Oct-2015	10:33:34	0.000	0.000
6-Oct-2015	10:37:34	0.000	0.000
6-Oct-2015	10:41:34	0.000	0.000
6-Oct-2015	10:45:34	0.000	0.000
6-Oct-2015	10:49:34	0.000	0.000
6-Oct-2015	10:53:34	0.000	0.000
6-Oct-2015	10:57:34	0.000	0.000
6-Oct-2015	11:01:34	0.000	0.000
6-Oct-2015	11:05:34	0.000	0.000
6-Oct-2015	11:09:34	0.000	0.000
6-Oct-2015	11:13:34	0.000	0.000
6-Oct-2015	11:17:34	0.000	0.000
6-Oct-2015	11:21:34	0.000	0.000
6-Oct-2015	11:25:34	0.000	0.000
6-Oct-2015	11:29:34	0.000	0.000
6-Oct-2015	11:33:34	0.000	0.000
6-Oct-2015	11:37:34	0.000	0.000
6-Oct-2015	11:41:34	0.000	0.000
6-Oct-2015	11:45:34	0.000	0.000
6-Oct-2015	11:49:34	0.000	0.000
6-Oct-2015	11:53:34	0.000	0.000
6-Oct-2015	11:57:34	0.000	0.000
6-Oct-2015	12:01:34	0.000	0.000
6-Oct-2015	12:05:34	0.000	0.000
6-Oct-2015	12:09:34	0.000	0.000
6-Oct-2015	12:13:34	0.000	0.000
6-Oct-2015	12:17:34	0.000	0.000
6-Oct-2015	12:21:34	0.000	0.000
6-Oct-2015	12:25:34	0.000	0.000

DUST MONITORING

October 2015

shading indicates values over the threshold

Monitor: 3

Threshold: 0.15 (mg/m^3)

Date	Time	Value (mg/m^3)	TWA (mg/m^3)
6-Oct-2015	12:29:34	0.000	0.000
6-Oct-2015	12:33:34	0.000	0.000
6-Oct-2015	12:37:34	0.000	0.000
6-Oct-2015	12:41:34	0.000	0.000
6-Oct-2015	12:45:34	0.001	0.000
6-Oct-2015	12:49:34	0.000	0.000
6-Oct-2015	12:53:34	0.000	0.000
6-Oct-2015	12:57:34	0.000	0.000
6-Oct-2015	13:01:34	0.000	0.000
6-Oct-2015	13:05:34	0.000	0.000
6-Oct-2015	13:09:34	0.000	0.000
6-Oct-2015	13:13:34	0.000	0.000
6-Oct-2015	13:17:34	0.000	0.000
6-Oct-2015	13:21:34	0.000	0.001
6-Oct-2015	13:25:34	0.002	0.001
6-Oct-2015	13:29:34	0.000	0.001
6-Oct-2015	13:33:34	0.000	0.000
6-Oct-2015	13:37:34	0.000	0.000
6-Oct-2015	13:41:34	0.000	0.000
6-Oct-2015	13:45:34	0.000	0.000
6-Oct-2015	13:49:34	0.000	0.000
6-Oct-2015	13:53:34	0.000	0.002
6-Oct-2015	13:57:34	0.007	0.002
6-Oct-2015	14:01:34	0.000	0.003
6-Oct-2015	14:05:34	0.001	0.000
6-Oct-2015	14:09:34	0.000	0.000
6-Oct-2015	14:13:34	0.000	0.000
6-Oct-2015	14:17:34	0.001	0.000
6-Oct-2015	14:21:34	0.000	0.000
6-Oct-2015	14:25:34	0.000	0.000
6-Oct-2015	14:29:34	0.000	0.000
6-Oct-2015	14:33:34	0.000	0.000
6-Oct-2015	14:37:34	0.000	0.000
6-Oct-2015	14:41:34	0.000	0.000
6-Oct-2015	14:45:34	0.000	0.002
6-Oct-2015	14:49:34	0.006	0.005
6-Oct-2015	14:53:34	0.010	0.012
6-Oct-2015	14:57:34	0.021	0.010
6-Oct-2015	15:01:34	0.000	0.008
6-Oct-2015	15:05:34	0.004	0.002
6-Oct-2015	15:09:34	0.002	0.009

DUST MONITORING

October 2015

shading indicates values over the threshold

Monitor: 3

Threshold: 0.15 (mg/m^3)

Date	Time	Value (mg/m^3)	TWA (mg/m^3)
6-Oct-2015	15:13:34	0.022	0.009
6-Oct-2015	15:17:34	0.002	0.023
6-Oct-2015	15:21:34	0.046	0.017
6-Oct-2015	15:25:34	0.002	0.026
6-Oct-2015	15:29:34	0.029	0.032
6-Oct-2015	15:33:34	0.065	0.031
6-Oct-2015	15:37:34	0.000	0.022
6-Oct-2015	15:41:34	0.000	0.000
7-Oct-2015	08:59:42	0.000	0.001
7-Oct-2015	09:03:42	0.001	0.000
7-Oct-2015	09:07:42	0.000	0.000
7-Oct-2015	09:11:42	0.000	0.000
7-Oct-2015	09:15:42	0.001	0.000
7-Oct-2015	09:19:42	0.000	0.000
7-Oct-2015	09:23:42	0.000	0.000
7-Oct-2015	09:27:42	0.000	0.000
7-Oct-2015	09:31:42	0.001	0.004
7-Oct-2015	09:35:42	0.010	0.008
7-Oct-2015	09:39:42	0.014	0.008
7-Oct-2015	09:43:42	0.001	0.005
7-Oct-2015	09:47:42	0.000	0.000
7-Oct-2015	09:51:42	0.000	0.000
7-Oct-2015	09:55:42	0.000	0.011
7-Oct-2015	09:59:42	0.032	3.091
7-Oct-2015	10:03:42	9.240	12.287
7-Oct-2015	10:07:42	27.590	12.279
7-Oct-2015	10:11:42	0.007	9.199
7-Oct-2015	10:15:42	0.001	0.003
7-Oct-2015	10:19:42	0.000	0.000
7-Oct-2015	10:23:42	0.000	0.000
7-Oct-2015	10:27:42	0.000	0.000
7-Oct-2015	10:31:42	0.000	0.000
7-Oct-2015	10:35:42	0.000	0.001
7-Oct-2015	10:39:42	0.002	0.003
7-Oct-2015	10:43:42	0.008	0.003
7-Oct-2015	10:47:42	0.000	0.003
7-Oct-2015	10:51:42	0.001	0.003
7-Oct-2015	10:55:42	0.009	0.004
7-Oct-2015	10:59:42	0.001	0.003
7-Oct-2015	11:03:42	0.000	0.002
7-Oct-2015	11:07:42	0.004	0.001

DUST MONITORING

October 2015

shading indicates values over the threshold

Monitor: 3

Threshold: 0.15 (mg/m^3)

Date	Time	Value (mg/m^3)	TWA (mg/m^3)
7-Oct-2015	11:11:42	0.000	0.001
7-Oct-2015	11:15:42	0.000	0.000
7-Oct-2015	11:19:42	0.000	0.000
7-Oct-2015	11:23:42	0.001	0.000
7-Oct-2015	11:27:42	0.000	0.045
7-Oct-2015	11:31:42	0.135	0.050
7-Oct-2015	11:35:42	0.016	0.057
7-Oct-2015	11:39:42	0.021	0.012
7-Oct-2015	11:43:42	0.000	0.007
7-Oct-2015	11:47:42	0.000	0.000
7-Oct-2015	11:51:42	0.000	0.000
7-Oct-2015	11:55:42	0.000	0.000
7-Oct-2015	11:59:42	0.000	0.000
7-Oct-2015	12:03:42	0.000	0.004
7-Oct-2015	12:07:42	0.011	0.004
7-Oct-2015	12:11:42	0.000	0.017
7-Oct-2015	12:15:42	0.039	0.013
7-Oct-2015	12:19:42	0.000	0.013
7-Oct-2015	12:23:42	0.000	0.000
7-Oct-2015	12:27:42	0.000	0.001
7-Oct-2015	12:31:42	0.002	0.001
7-Oct-2015	12:35:42	0.000	0.001
7-Oct-2015	12:39:42	0.000	0.000
7-Oct-2015	12:43:42	0.000	0.001
7-Oct-2015	12:47:42	0.002	0.001
7-Oct-2015	12:51:42	0.000	0.001
7-Oct-2015	12:55:42	0.000	0.001
7-Oct-2015	12:59:42	0.002	0.002
7-Oct-2015	13:03:42	0.003	0.002
7-Oct-2015	13:07:42	0.000	0.001
7-Oct-2015	13:11:42	0.001	0.001
7-Oct-2015	13:15:42	0.001	0.001
7-Oct-2015	13:19:42	0.000	0.000
7-Oct-2015	13:23:42	0.000	0.000
7-Oct-2015	13:27:42	0.000	0.001
7-Oct-2015	13:31:42	0.004	0.002
7-Oct-2015	13:35:42	0.002	0.002
7-Oct-2015	13:39:42	0.000	0.001
7-Oct-2015	13:43:42	0.000	0.001
7-Oct-2015	13:47:42	0.004	0.002
7-Oct-2015	13:51:42	0.002	0.002

DUST MONITORING

October 2015

shading indicates values over the threshold

Monitor: 3

Threshold: 0.15 (mg/m^3)

Date	Time	Value (mg/m^3)	TWA (mg/m^3)
7-Oct-2015	13:55:42	0.000	0.001
7-Oct-2015	13:59:42	0.000	0.000
7-Oct-2015	14:03:42	0.000	0.000
7-Oct-2015	14:07:42	0.000	0.001
7-Oct-2015	14:11:42	0.002	0.004
7-Oct-2015	14:15:42	0.011	0.004
7-Oct-2015	14:19:42	0.000	0.004
7-Oct-2015	14:23:42	0.000	0.000
7-Oct-2015	14:27:42	0.000	0.000
7-Oct-2015	14:31:42	0.000	0.001
7-Oct-2015	14:35:42	0.004	0.002
7-Oct-2015	14:39:42	0.002	0.003
7-Oct-2015	14:43:42	0.002	0.003
7-Oct-2015	14:47:42	0.004	0.002
7-Oct-2015	14:51:42	0.001	0.004
7-Oct-2015	14:55:42	0.006	0.002
7-Oct-2015	14:59:42	0.000	0.003
7-Oct-2015	15:03:42	0.002	0.002
7-Oct-2015	15:07:42	0.005	0.002
7-Oct-2015	15:11:42	0.000	0.007
7-Oct-2015	15:15:42	0.015	0.006
7-Oct-2015	15:19:42	0.003	0.007
7-Oct-2015	15:23:42	0.004	0.002
7-Oct-2015	15:27:42	0.000	0.001
7-Oct-2015	15:31:42	0.000	0.000
7-Oct-2015	15:35:42	0.000	0.000
7-Oct-2015	15:39:42	0.000	0.000
7-Oct-2015	15:43:42	0.000	0.000
7-Oct-2015	15:47:42	0.000	0.002
7-Oct-2015	15:51:42	0.007	0.002
7-Oct-2015	15:55:42	0.000	0.003
7-Oct-2015	15:59:42	0.003	0.001
7-Oct-2015	16:03:42	0.000	0.001
7-Oct-2015	16:07:42	0.000	0.000
9-Oct-2015	08:02:19	0.008	0.009
9-Oct-2015	08:06:19	0.009	0.009
9-Oct-2015	08:10:19	0.010	0.008
9-Oct-2015	08:14:19	0.006	0.007
9-Oct-2015	08:18:19	0.004	0.008
9-Oct-2015	08:22:19	0.013	0.007
9-Oct-2015	08:26:19	0.003	0.007

DUST MONITORING

October 2015

shading indicates values over the threshold

Monitor: 3

Threshold: 0.15 (mg/m^3)

Date	Time	Value (mg/m^3)	TWA (mg/m^3)
9-Oct-2015	08:30:19	0.005	0.005
9-Oct-2015	08:34:19	0.006	0.005
9-Oct-2015	08:38:19	0.005	0.013
9-Oct-2015	08:42:19	0.027	0.012
9-Oct-2015	08:46:19	0.004	0.011
9-Oct-2015	08:50:19	0.001	0.002
9-Oct-2015	08:54:19	0.002	0.001
9-Oct-2015	08:58:19	0.001	0.010
9-Oct-2015	09:02:19	0.027	0.012
9-Oct-2015	09:06:19	0.007	0.015
9-Oct-2015	09:10:19	0.010	0.014
9-Oct-2015	09:14:19	0.025	0.027
9-Oct-2015	09:18:19	0.047	0.039
9-Oct-2015	09:22:19	0.045	0.033
9-Oct-2015	09:26:19	0.007	0.020
9-Oct-2015	09:30:19	0.008	0.008
9-Oct-2015	09:34:19	0.009	0.030
9-Oct-2015	09:38:19	0.074	0.041
9-Oct-2015	09:42:19	0.040	0.044
9-Oct-2015	09:46:19	0.017	0.029
9-Oct-2015	09:50:19	0.030	0.020
9-Oct-2015	09:54:19	0.014	0.018
9-Oct-2015	09:58:19	0.010	0.017
9-Oct-2015	10:02:19	0.027	0.015
9-Oct-2015	10:06:19	0.008	0.013
9-Oct-2015	10:10:19	0.004	0.007
9-Oct-2015	10:14:19	0.008	0.006
9-Oct-2015	10:18:19	0.005	0.006
9-Oct-2015	10:22:19	0.005	0.004
9-Oct-2015	10:26:19	0.003	0.004
9-Oct-2015	10:30:19	0.004	0.004
9-Oct-2015	10:34:19	0.004	0.004
9-Oct-2015	10:38:19	0.005	0.004
9-Oct-2015	10:42:19	0.003	0.004
9-Oct-2015	10:46:19	0.005	0.004
9-Oct-2015	10:50:19	0.004	0.004
9-Oct-2015	10:54:19	0.003	0.003
9-Oct-2015	10:58:19	0.002	0.003
9-Oct-2015	11:02:19	0.003	0.003
9-Oct-2015	11:06:19	0.003	0.008
9-Oct-2015	11:10:19	0.018	0.098

DUST MONITORING

October 2015

shading indicates values over the threshold

Monitor: 3

Threshold: 0.15 (mg/m^3)

Date	Time	Value (mg/m^3)	TWA (mg/m^3)
9-Oct-2015	11:14:19	0.272	0.115
9-Oct-2015	11:18:19	0.054	0.111
9-Oct-2015	11:22:19	0.008	0.023
9-Oct-2015	11:26:19	0.006	0.006
9-Oct-2015	11:30:19	0.005	0.016
9-Oct-2015	11:34:19	0.038	0.015
9-Oct-2015	11:38:19	0.002	0.016
9-Oct-2015	11:42:19	0.007	0.004
9-Oct-2015	11:46:19	0.003	0.008
9-Oct-2015	11:50:19	0.013	0.051
9-Oct-2015	11:54:19	0.138	0.052
9-Oct-2015	11:58:19	0.004	0.094
9-Oct-2015	12:02:19	0.140	0.107
9-Oct-2015	12:06:19	0.178	0.109
9-Oct-2015	12:10:19	0.008	0.064
9-Oct-2015	12:14:19	0.005	0.006
9-Oct-2015	12:18:19	0.004	0.024
9-Oct-2015	12:22:19	0.063	0.022
9-Oct-2015	12:26:19	0.000	0.048
9-Oct-2015	12:30:19	0.082	0.043
9-Oct-2015	12:34:19	0.047	0.043
9-Oct-2015	12:38:19	0.001	0.016
9-Oct-2015	12:42:19	0.001	0.003
9-Oct-2015	12:46:19	0.006	0.003
9-Oct-2015	12:50:19	0.001	0.003
9-Oct-2015	12:54:19	0.001	0.001
9-Oct-2015	12:58:19	0.002	0.026
9-Oct-2015	13:02:19	0.074	0.026
9-Oct-2015	13:06:19	0.003	0.029
9-Oct-2015	13:10:19	0.010	0.004
9-Oct-2015	13:14:19	0.000	0.003
9-Oct-2015	13:18:19	0.000	0.015
9-Oct-2015	13:22:19	0.044	0.016
9-Oct-2015	13:26:19	0.004	0.020
9-Oct-2015	13:30:19	0.011	0.006
9-Oct-2015	13:34:19	0.002	0.004
9-Oct-2015	13:38:19	0.000	0.001
9-Oct-2015	13:42:19	0.000	0.012
9-Oct-2015	13:46:19	0.037	0.014
9-Oct-2015	13:50:19	0.005	0.016
9-Oct-2015	13:54:19	0.006	0.004

DUST MONITORING

October 2015

shading indicates values over the threshold

Monitor: 3

Threshold: 0.15 (mg/m^3)

Date	Time	Value (mg/m^3)	TWA (mg/m^3)
9-Oct-2015	13:58:19	0.002	0.007
9-Oct-2015	14:02:19	0.014	0.006
9-Oct-2015	14:06:19	0.003	0.016
9-Oct-2015	14:10:19	0.032	0.053
9-Oct-2015	14:14:19	0.125	0.053
9-Oct-2015	14:18:19	0.002	0.043
9-Oct-2015	14:22:19	0.001	0.001
9-Oct-2015	14:26:19	0.001	0.008
9-Oct-2015	14:30:19	0.021	0.008
9-Oct-2015	14:34:19	0.002	0.008
9-Oct-2015	14:38:19	0.002	0.002
9-Oct-2015	14:42:19	0.002	0.002
9-Oct-2015	14:46:19	0.002	0.002
9-Oct-2015	14:50:19	0.002	0.002
9-Oct-2015	14:54:19	0.003	0.003
9-Oct-2015	14:58:19	0.003	0.003
9-Oct-2015	15:02:19	0.003	0.003
9-Oct-2015	15:06:19	0.003	0.003
9-Oct-2015	15:10:19	0.002	0.002
9-Oct-2015	15:14:19	0.002	0.003
9-Oct-2015	15:18:19	0.006	0.004
12-Oct-2015	08:04:55	0.009	0.011
12-Oct-2015	08:08:55	0.013	0.011
12-Oct-2015	08:12:55	0.010	0.011
12-Oct-2015	08:16:55	0.010	0.008
12-Oct-2015	08:20:55	0.005	0.007
12-Oct-2015	08:24:55	0.006	0.006
12-Oct-2015	08:28:55	0.007	0.006
12-Oct-2015	08:32:55	0.006	0.006
12-Oct-2015	08:36:55	0.004	0.005
12-Oct-2015	08:40:55	0.004	0.004
12-Oct-2015	08:44:55	0.003	0.004
12-Oct-2015	08:48:55	0.004	0.004
12-Oct-2015	08:52:55	0.004	0.004
12-Oct-2015	08:56:55	0.004	0.004
12-Oct-2015	09:00:55	0.005	0.005
12-Oct-2015	09:04:55	0.005	0.005
12-Oct-2015	09:08:55	0.004	0.004
12-Oct-2015	09:12:55	0.002	0.003
12-Oct-2015	09:16:55	0.003	0.003
12-Oct-2015	09:20:55	0.003	0.003

DUST MONITORING

October 2015

shading indicates values over the threshold

Monitor: 3

Threshold: 0.15 (mg/m^3)

Date	Time	Value (mg/m^3)	TWA (mg/m^3)
12-Oct-2015	09:24:55	0.003	0.003
12-Oct-2015	09:28:55	0.003	0.003
12-Oct-2015	09:32:55	0.004	0.004
12-Oct-2015	09:36:55	0.004	0.004
12-Oct-2015	09:40:55	0.005	0.004
12-Oct-2015	09:44:55	0.004	0.004
12-Oct-2015	09:48:55	0.004	0.004
12-Oct-2015	09:52:55	0.004	0.005
12-Oct-2015	09:56:55	0.006	0.005
12-Oct-2015	10:00:55	0.006	0.005
12-Oct-2015	10:04:55	0.004	0.004
12-Oct-2015	10:08:55	0.003	0.003
12-Oct-2015	10:12:55	0.003	0.003
12-Oct-2015	10:16:55	0.003	0.003
12-Oct-2015	10:20:55	0.002	0.003
12-Oct-2015	10:24:55	0.003	0.002
12-Oct-2015	10:28:55	0.001	0.002
12-Oct-2015	10:32:55	0.001	0.003
12-Oct-2015	10:36:55	0.006	0.003
12-Oct-2015	10:40:55	0.001	0.003
12-Oct-2015	10:44:55	0.001	0.001
12-Oct-2015	10:48:55	0.001	0.001
12-Oct-2015	10:52:55	0.001	0.002
12-Oct-2015	10:56:55	0.004	0.002
12-Oct-2015	11:00:55	0.002	0.003
12-Oct-2015	11:04:55	0.004	0.003
12-Oct-2015	11:08:55	0.002	0.003
12-Oct-2015	11:12:55	0.002	0.002
12-Oct-2015	11:16:55	0.002	0.003
12-Oct-2015	11:20:55	0.004	0.002
12-Oct-2015	11:24:55	0.001	0.002
12-Oct-2015	11:28:55	0.002	0.002
12-Oct-2015	11:32:55	0.003	0.002
12-Oct-2015	11:36:55	0.001	0.002
12-Oct-2015	11:40:55	0.001	0.001
12-Oct-2015	11:44:55	0.001	0.001
12-Oct-2015	11:48:55	0.001	0.001
12-Oct-2015	11:52:55	0.001	0.001
12-Oct-2015	11:56:55	0.001	0.001
12-Oct-2015	12:00:55	0.001	0.001
12-Oct-2015	12:04:55	0.000	0.001

DUST MONITORING

October 2015

shading indicates values over the threshold

Monitor: 3

Threshold: 0.15 (mg/m^3)

Date	Time	Value (mg/m^3)	TWA (mg/m^3)
12-Oct-2015	12:08:55	0.003	0.001
12-Oct-2015	12:12:55	0.001	0.002
12-Oct-2015	12:16:55	0.001	0.001
12-Oct-2015	12:20:55	0.002	0.001
12-Oct-2015	12:24:55	0.001	0.001
12-Oct-2015	12:28:55	0.000	0.001
12-Oct-2015	12:32:55	0.001	0.001
12-Oct-2015	12:36:55	0.001	0.001
12-Oct-2015	12:40:55	0.002	0.002
12-Oct-2015	12:44:55	0.002	0.002
12-Oct-2015	12:48:55	0.001	0.001
12-Oct-2015	12:52:55	0.001	0.001
12-Oct-2015	12:56:55	0.001	0.001
12-Oct-2015	13:00:55	0.001	0.001
12-Oct-2015	13:04:55	0.001	0.001
12-Oct-2015	13:08:55	0.001	0.001
12-Oct-2015	13:12:55	0.001	0.001
12-Oct-2015	13:16:55	0.000	0.001
12-Oct-2015	13:20:55	0.002	0.001
12-Oct-2015	13:24:55	0.000	0.001
12-Oct-2015	13:28:55	0.000	0.000
12-Oct-2015	13:32:55	0.000	0.000
12-Oct-2015	13:36:55	0.000	0.002
12-Oct-2015	13:40:55	0.006	0.002
12-Oct-2015	13:44:55	0.000	0.002
12-Oct-2015	13:48:55	0.001	0.002
12-Oct-2015	13:52:55	0.004	0.002
12-Oct-2015	13:56:55	0.001	0.004
12-Oct-2015	14:00:55	0.008	0.003
12-Oct-2015	14:04:55	0.000	0.003
12-Oct-2015	14:08:55	0.001	0.000
12-Oct-2015	14:12:55	0.000	0.000
12-Oct-2015	14:16:55	0.000	0.000
12-Oct-2015	14:20:55	0.000	0.000
12-Oct-2015	14:24:55	0.001	0.001
12-Oct-2015	14:28:55	0.001	0.001
12-Oct-2015	14:32:55	0.001	0.002
12-Oct-2015	14:36:55	0.003	0.002
12-Oct-2015	14:40:55	0.002	0.002
12-Oct-2015	14:44:55	0.001	0.001
12-Oct-2015	14:48:55	0.000	0.002

DUST MONITORING

October 2015

shading indicates values over the threshold

Monitor: 3

Threshold: 0.15 (mg/m^3)

Date	Time	Value (mg/m^3)	TWA (mg/m^3)
12-Oct-2015	14:52:55	0.004	0.004
12-Oct-2015	14:56:55	0.007	0.004
12-Oct-2015	15:00:55	0.001	0.005
12-Oct-2015	15:04:55	0.006	0.003
12-Oct-2015	15:08:55	0.002	0.003
12-Oct-2015	15:12:55	0.001	0.002
12-Oct-2015	15:16:55	0.002	0.001
12-Oct-2015	15:20:55	0.001	0.001
12-Oct-2015	15:24:55	0.001	0.001
12-Oct-2015	15:28:55	0.001	0.001
12-Oct-2015	15:32:55	0.000	0.001
12-Oct-2015	15:36:55	0.001	0.002
12-Oct-2015	15:40:55	0.006	0.007
12-Oct-2015	15:44:55	0.015	0.008
12-Oct-2015	15:48:55	0.003	0.008
12-Oct-2015	15:52:55	0.005	0.004
12-Oct-2015	15:56:55	0.004	0.005
12-Oct-2015	16:00:55	0.006	0.005
12-Oct-2015	16:04:55	0.006	0.006
12-Oct-2015	16:08:55	0.006	0.006
12-Oct-2015	16:12:55	0.006	0.006
14-Oct-2015	09:36:50	0.012	0.012
14-Oct-2015	09:40:50	0.012	0.012
14-Oct-2015	09:44:50	0.011	0.034
14-Oct-2015	09:48:50	0.080	0.053
14-Oct-2015	09:52:50	0.067	0.052
14-Oct-2015	09:56:50	0.009	0.027
14-Oct-2015	10:00:50	0.004	0.005
14-Oct-2015	10:04:50	0.003	0.003
14-Oct-2015	10:08:50	0.002	0.002
14-Oct-2015	10:12:50	0.002	0.002
14-Oct-2015	10:16:50	0.002	0.002
14-Oct-2015	10:20:50	0.002	0.002
14-Oct-2015	10:24:50	0.001	0.001
14-Oct-2015	10:28:50	0.001	0.001
14-Oct-2015	10:32:50	0.002	0.001
14-Oct-2015	10:36:50	0.001	0.002
14-Oct-2015	10:40:50	0.004	0.002
14-Oct-2015	10:44:50	0.002	0.002
14-Oct-2015	10:48:50	0.001	0.002
14-Oct-2015	10:52:50	0.002	0.002

DUST MONITORING

October 2015

shading indicates values over the threshold

Monitor: 3

Threshold: 0.15 (mg/m^3)

Date	Time	Value (mg/m^3)	TWA (mg/m^3)
14-Oct-2015	10:56:50	0.002	0.002
14-Oct-2015	11:00:50	0.001	0.001
14-Oct-2015	11:04:50	0.001	0.001
14-Oct-2015	11:08:50	0.001	0.001
14-Oct-2015	11:12:50	0.000	0.001
14-Oct-2015	11:16:50	0.001	0.000
14-Oct-2015	11:20:50	0.000	0.001
14-Oct-2015	11:24:50	0.002	0.001
14-Oct-2015	11:28:50	0.002	0.002
14-Oct-2015	11:32:50	0.003	0.003
14-Oct-2015	11:36:50	0.003	0.002
14-Oct-2015	11:40:50	0.001	0.002
14-Oct-2015	11:44:50	0.001	0.001
14-Oct-2015	11:48:50	0.002	0.001
14-Oct-2015	11:52:50	0.001	0.002
14-Oct-2015	11:56:50	0.002	0.002
14-Oct-2015	12:00:50	0.002	0.003
14-Oct-2015	12:04:50	0.005	0.004
14-Oct-2015	12:08:50	0.006	0.005
14-Oct-2015	12:12:50	0.003	0.004
14-Oct-2015	12:16:50	0.002	0.002
14-Oct-2015	12:20:50	0.002	0.002
14-Oct-2015	12:24:50	0.001	0.002
14-Oct-2015	12:28:50	0.003	0.002
14-Oct-2015	12:32:50	0.002	0.002
14-Oct-2015	12:36:50	0.002	0.002
14-Oct-2015	12:40:50	0.002	0.002
14-Oct-2015	12:44:50	0.002	0.002
14-Oct-2015	12:48:50	0.002	0.002
14-Oct-2015	12:52:50	0.002	0.002
14-Oct-2015	12:56:50	0.003	0.002
14-Oct-2015	13:00:50	0.001	0.002
14-Oct-2015	13:04:50	0.001	0.001
14-Oct-2015	13:08:50	0.002	0.002
14-Oct-2015	13:12:50	0.002	0.003
14-Oct-2015	13:16:50	0.004	0.003
14-Oct-2015	13:20:50	0.003	0.004
14-Oct-2015	13:24:50	0.004	0.004
14-Oct-2015	13:28:50	0.004	0.004
14-Oct-2015	13:32:50	0.004	0.005
14-Oct-2015	13:36:50	0.006	0.005

DUST MONITORING

October 2015

shading indicates values over the threshold

Monitor: 3

Threshold: 0.15 (mg/m^3)

Date	Time	Value (mg/m^3)	TWA (mg/m^3)
14-Oct-2015	13:40:50	0.005	0.005
14-Oct-2015	13:44:50	0.005	0.005
14-Oct-2015	13:48:50	0.005	0.005
14-Oct-2015	13:52:50	0.006	0.006
14-Oct-2015	13:56:50	0.007	0.008
14-Oct-2015	14:00:50	0.011	0.010
14-Oct-2015	14:04:50	0.013	0.012
14-Oct-2015	14:08:50	0.012	0.012
14-Oct-2015	14:12:50	0.010	0.011
14-Oct-2015	14:16:50	0.010	0.009
14-Oct-2015	14:20:50	0.008	0.008
14-Oct-2015	14:24:50	0.006	0.007
14-Oct-2015	14:28:50	0.007	0.007
14-Oct-2015	14:32:50	0.008	0.008
14-Oct-2015	14:36:50	0.008	0.008
14-Oct-2015	14:40:50	0.008	0.010
14-Oct-2015	14:44:50	0.013	0.011
14-Oct-2015	14:48:50	0.011	0.011
14-Oct-2015	14:52:50	0.010	0.012
14-Oct-2015	14:56:50	0.014	0.011
14-Oct-2015	15:00:50	0.009	0.011
14-Oct-2015	15:04:50	0.009	0.009
14-Oct-2015	15:08:50	0.008	0.008
14-Oct-2015	15:12:50	0.008	0.008
14-Oct-2015	15:16:50	0.008	0.008
14-Oct-2015	15:20:50	0.009	0.009
14-Oct-2015	15:24:50	0.009	0.009
14-Oct-2015	15:28:50	0.008	0.009
14-Oct-2015	15:32:50	0.009	0.008
14-Oct-2015	15:36:50	0.008	0.008
14-Oct-2015	15:40:50	0.007	0.007
14-Oct-2015	15:44:50	0.006	0.010
14-Oct-2015	15:48:50	0.018	0.010
14-Oct-2015	15:52:50	0.007	0.010
14-Oct-2015	15:56:50	0.005	0.006
14-Oct-2015	16:00:50	0.005	0.005
14-Oct-2015	16:04:50	0.005	0.005
14-Oct-2015	16:08:50	0.006	0.007
14-Oct-2015	16:12:50	0.010	0.007
14-Oct-2015	16:16:50	0.005	0.006
14-Oct-2015	16:20:50	0.004	0.004

DUST MONITORING

October 2015

shading indicates values over the threshold

Monitor: 3

Threshold: 0.15 (mg/m^3)

Date	Time	Value (mg/m^3)	TWA (mg/m^3)
14-Oct-2015	16:24:50	0.004	0.004
14-Oct-2015	16:28:50	0.005	0.004
14-Oct-2015	16:32:50	0.004	0.006
14-Oct-2015	16:36:50	0.008	0.007
14-Oct-2015	16:40:50	0.009	0.008
14-Oct-2015	16:44:50	0.007	0.007
14-Oct-2015	16:48:50	0.006	0.006
14-Oct-2015	16:52:50	0.005	0.006
14-Oct-2015	16:56:50	0.008	0.006
14-Oct-2015	17:00:50	0.005	0.006
14-Oct-2015	17:04:50	0.004	0.005
14-Oct-2015	17:08:50	0.005	0.004
14-Oct-2015	17:12:50	0.004	0.007
14-Oct-2015	17:16:50	0.011	0.010
14-Oct-2015	17:20:50	0.016	0.013
14-Oct-2015	17:24:50	0.011	0.035
14-Oct-2015	17:28:50	0.079	0.045
15-Oct-2015	12:54:12	0.008	0.006
15-Oct-2015	12:58:12	0.004	0.005
15-Oct-2015	13:02:12	0.003	0.003
15-Oct-2015	13:06:12	0.003	0.003
15-Oct-2015	13:10:12	0.002	0.003
15-Oct-2015	13:14:12	0.003	0.003
15-Oct-2015	13:18:12	0.004	0.003
15-Oct-2015	13:22:12	0.003	0.003
15-Oct-2015	13:26:12	0.002	0.003
15-Oct-2015	13:30:12	0.003	0.003
15-Oct-2015	13:34:12	0.003	0.003
15-Oct-2015	13:38:12	0.002	0.021
15-Oct-2015	13:42:12	0.058	0.025
15-Oct-2015	13:46:12	0.014	0.025
15-Oct-2015	13:50:12	0.002	0.006
15-Oct-2015	13:54:12	0.003	0.002
15-Oct-2015	13:58:12	0.001	0.013
15-Oct-2015	14:02:12	0.035	0.018
15-Oct-2015	14:06:12	0.017	0.018
15-Oct-2015	14:10:12	0.003	0.038
15-Oct-2015	14:14:12	0.095	0.035
15-Oct-2015	14:18:12	0.007	0.035
15-Oct-2015	14:22:12	0.004	0.008
15-Oct-2015	14:26:12	0.014	0.007

DUST MONITORING

October 2015

shading indicates values over the threshold

Monitor: 3

Threshold: 0.15 (mg/m^3)

Date	Time	Value (mg/m^3)	TWA (mg/m^3)
15-Oct-2015	14:30:12	0.003	0.007
15-Oct-2015	14:34:12	0.003	0.004
15-Oct-2015	14:38:12	0.007	0.006
15-Oct-2015	14:42:12	0.008	0.049
15-Oct-2015	14:46:12	0.131	0.048
15-Oct-2015	14:50:12	0.004	0.046
15-Oct-2015	14:54:12	0.004	0.004
15-Oct-2015	14:58:12	0.003	0.003
15-Oct-2015	15:02:12	0.002	0.005
15-Oct-2015	15:06:12	0.010	0.018
15-Oct-2015	15:10:12	0.043	0.033
15-Oct-2015	15:14:12	0.046	0.035
15-Oct-2015	15:18:12	0.016	0.031
15-Oct-2015	15:22:12	0.030	0.027
15-Oct-2015	15:26:12	0.035	0.026
15-Oct-2015	15:30:12	0.012	0.032
15-Oct-2015	15:34:12	0.049	0.030
15-Oct-2015	15:38:12	0.028	0.030
15-Oct-2015	15:42:12	0.013	0.020
15-Oct-2015	15:46:12	0.020	0.029
15-Oct-2015	15:50:12	0.055	0.053
15-Oct-2015	15:54:12	0.083	0.047
15-Oct-2015	15:58:12	0.004	0.032
15-Oct-2015	16:02:12	0.008	0.006
15-Oct-2015	16:06:12	0.005	0.007
15-Oct-2015	16:10:12	0.007	0.006
15-Oct-2015	16:14:12	0.006	0.007
15-Oct-2015	16:18:12	0.007	0.012
15-Oct-2015	16:22:12	0.022	0.013
15-Oct-2015	16:26:12	0.011	0.012
15-Oct-2015	16:30:12	0.004	0.013
15-Oct-2015	16:34:12	0.025	0.020
15-Oct-2015	16:38:12	0.032	0.035
15-Oct-2015	16:42:12	0.047	0.038
15-Oct-2015	16:46:12	0.036	0.050
15-Oct-2015	16:50:12	0.068	0.047
15-Oct-2015	16:54:12	0.036	0.053
15-Oct-2015	16:58:12	0.054	0.040
15-Oct-2015	17:02:12	0.030	0.042
15-Oct-2015	17:06:12	0.043	0.040
15-Oct-2015	17:10:12	0.048	0.050

DUST MONITORING

October 2015

shading indicates values over the threshold

Monitor: 3

Threshold: 0.15 (mg/m^3)

Date	Time	Value (mg/m^3)	TWA (mg/m^3)
15-Oct-2015	17:14:12	0.059	0.057
15-Oct-2015	17:18:12	0.064	0.059
15-Oct-2015	17:22:12	0.055	0.055
15-Oct-2015	17:26:12	0.046	0.056
15-Oct-2015	17:30:12	0.068	0.049
15-Oct-2015	17:34:12	0.032	0.038
15-Oct-2015	17:38:12	0.013	0.019
15-Oct-2015	17:42:12	0.013	0.012
15-Oct-2015	17:46:12	0.011	0.019
15-Oct-2015	17:50:12	0.033	0.023
15-Oct-2015	17:54:12	0.026	0.022
15-Oct-2015	17:58:12	0.008	0.017
15-Oct-2015	18:02:12	0.018	0.015
15-Oct-2015	18:06:12	0.018	0.016
15-Oct-2015	18:10:12	0.011	0.034
15-Oct-2015	18:14:12	0.073	0.046
15-Oct-2015	18:18:12	0.053	0.053
15-Oct-2015	18:22:12	0.033	0.035
15-Oct-2015	18:26:12	0.020	0.027
16-Oct-2015	09:43:19	0.025	0.023
16-Oct-2015	09:47:19	0.021	0.022
16-Oct-2015	09:51:19	0.019	0.021
16-Oct-2015	09:55:19	0.022	0.020
16-Oct-2015	09:59:19	0.018	0.020
16-Oct-2015	10:03:19	0.019	0.021
16-Oct-2015	10:07:19	0.025	0.020
16-Oct-2015	10:11:19	0.017	0.020
16-Oct-2015	10:15:19	0.017	0.025
16-Oct-2015	10:19:19	0.040	0.023
16-Oct-2015	10:23:19	0.011	0.026
16-Oct-2015	10:27:19	0.027	0.018
16-Oct-2015	10:31:19	0.016	0.020
16-Oct-2015	10:35:19	0.017	0.016
16-Oct-2015	10:39:19	0.014	0.015
16-Oct-2015	10:43:19	0.013	0.013
16-Oct-2015	10:47:19	0.013	0.011
16-Oct-2015	10:51:19	0.008	0.016
16-Oct-2015	10:55:19	0.028	0.017
16-Oct-2015	10:59:19	0.015	0.018
16-Oct-2015	11:03:19	0.011	0.015
16-Oct-2015	11:07:19	0.018	0.014

DUST MONITORING

October 2015

shading indicates values over the threshold

Monitor: 3

Threshold: 0.15 (mg/m^3)

Date	Time	Value (mg/m^3)	TWA (mg/m^3)
16-Oct-2015	11:11:19	0.014	0.016
16-Oct-2015	11:15:19	0.015	0.015
16-Oct-2015	11:19:19	0.017	0.016
16-Oct-2015	11:23:19	0.015	0.016
16-Oct-2015	11:27:19	0.017	0.016
16-Oct-2015	11:31:19	0.017	0.016
16-Oct-2015	11:35:19	0.015	0.016
16-Oct-2015	11:39:19	0.017	0.018
16-Oct-2015	11:43:19	0.023	0.018
16-Oct-2015	11:47:19	0.013	0.018
16-Oct-2015	11:51:19	0.019	0.018
16-Oct-2015	11:55:19	0.021	0.018
16-Oct-2015	11:59:19	0.014	0.017
16-Oct-2015	12:03:19	0.016	0.017
16-Oct-2015	12:07:19	0.020	0.018
16-Oct-2015	12:11:19	0.017	0.020
16-Oct-2015	12:15:19	0.022	0.018
16-Oct-2015	12:19:19	0.015	0.017
16-Oct-2015	12:23:19	0.015	0.017
16-Oct-2015	12:27:19	0.020	0.017
16-Oct-2015	12:31:19	0.016	0.018
16-Oct-2015	12:35:19	0.018	0.016
16-Oct-2015	12:39:19	0.014	0.017
16-Oct-2015	12:43:19	0.019	0.017
16-Oct-2015	12:47:19	0.017	0.017
16-Oct-2015	12:51:19	0.014	0.015
16-Oct-2015	12:55:19	0.014	0.015
16-Oct-2015	12:59:19	0.018	0.015
16-Oct-2015	13:03:19	0.013	0.014
16-Oct-2015	13:07:19	0.012	0.012
16-Oct-2015	13:11:19	0.012	0.012
16-Oct-2015	13:15:19	0.013	0.012
16-Oct-2015	13:19:19	0.012	0.012
16-Oct-2015	13:23:19	0.011	0.012
16-Oct-2015	13:27:19	0.014	0.012
16-Oct-2015	13:31:19	0.011	0.012
16-Oct-2015	13:35:19	0.011	0.011
16-Oct-2015	13:39:19	0.011	0.012
16-Oct-2015	13:43:19	0.015	0.013
16-Oct-2015	13:47:19	0.012	0.013
16-Oct-2015	13:51:19	0.011	0.012

DUST MONITORING

October 2015

shading indicates values over the threshold

Monitor: 3

Threshold: 0.15 (mg/m^3)

Date	Time	Value (mg/m^3)	TWA (mg/m^3)
16-Oct-2015	13:55:19	0.013	0.012
16-Oct-2015	13:59:19	0.011	0.012
16-Oct-2015	14:03:19	0.012	0.012
16-Oct-2015	14:07:19	0.012	0.012
16-Oct-2015	14:11:19	0.011	0.013
16-Oct-2015	14:15:19	0.016	0.014
16-Oct-2015	14:19:19	0.016	0.017
16-Oct-2015	14:23:19	0.018	0.015
16-Oct-2015	14:27:19	0.011	0.013
16-Oct-2015	14:31:19	0.011	0.011
16-Oct-2015	14:35:19	0.011	0.011
16-Oct-2015	14:39:19	0.011	0.011
16-Oct-2015	14:43:19	0.010	0.010
16-Oct-2015	14:47:19	0.009	0.010
16-Oct-2015	14:51:19	0.010	0.010
16-Oct-2015	14:55:19	0.010	0.010
16-Oct-2015	14:59:19	0.010	0.010
16-Oct-2015	15:03:19	0.010	0.010
16-Oct-2015	15:07:19	0.010	0.010
16-Oct-2015	15:11:19	0.009	0.010
16-Oct-2015	15:15:19	0.010	0.010
16-Oct-2015	15:19:19	0.010	0.011
16-Oct-2015	15:23:19	0.013	0.011
16-Oct-2015	15:27:19	0.009	0.011
16-Oct-2015	15:31:19	0.010	0.011
16-Oct-2015	15:35:19	0.013	0.012
16-Oct-2015	15:39:19	0.013	0.013
16-Oct-2015	15:43:19	0.014	0.013
16-Oct-2015	15:47:19	0.013	0.013
16-Oct-2015	15:51:19	0.013	0.013
16-Oct-2015	15:55:19	0.012	0.013
16-Oct-2015	15:59:19	0.014	0.013
16-Oct-2015	16:03:19	0.012	0.026
16-Oct-2015	16:07:19	0.053	0.030
16-Oct-2015	16:11:19	0.024	0.048
16-Oct-2015	16:15:19	0.067	0.041
16-Oct-2015	16:19:19	0.031	0.040
16-Oct-2015	16:23:19	0.021	0.023
16-Oct-2015	16:27:19	0.017	0.017
16-Oct-2015	16:31:19	0.013	0.076
16-Oct-2015	16:35:19	0.199	0.106

DUST MONITORING

October 2015

shading indicates values over the threshold

Monitor: 3

Threshold: 0.15 (mg/m^3)

Date	Time	Value (mg/m^3)	TWA (mg/m^3)
21-Oct-2015	08:21:14	0.015	0.016
21-Oct-2015	08:25:14	0.017	0.017
21-Oct-2015	08:29:14	0.019	0.019
21-Oct-2015	08:33:14	0.022	0.021
21-Oct-2015	08:37:14	0.023	0.033
21-Oct-2015	08:41:14	0.055	0.034
21-Oct-2015	08:45:14	0.024	0.035
21-Oct-2015	08:49:14	0.025	0.026
21-Oct-2015	08:53:14	0.029	0.026
21-Oct-2015	08:57:14	0.025	0.026
21-Oct-2015	09:01:14	0.025	0.025
21-Oct-2015	09:05:14	0.026	0.026
21-Oct-2015	09:09:14	0.026	0.026
21-Oct-2015	09:13:14	0.027	0.026
21-Oct-2015	09:17:14	0.026	0.026
21-Oct-2015	09:21:14	0.025	0.026
21-Oct-2015	09:25:14	0.026	0.026
21-Oct-2015	09:29:14	0.026	0.026
21-Oct-2015	09:33:14	0.026	0.026
21-Oct-2015	09:37:14	0.027	0.027
21-Oct-2015	09:41:14	0.027	0.028
21-Oct-2015	09:45:14	0.030	0.029
21-Oct-2015	09:49:14	0.029	0.029
21-Oct-2015	09:53:14	0.027	0.027
21-Oct-2015	09:57:14	0.026	0.027
21-Oct-2015	10:01:14	0.027	0.027
21-Oct-2015	10:05:14	0.027	0.027
21-Oct-2015	10:09:14	0.027	0.030
21-Oct-2015	10:13:14	0.035	0.030
21-Oct-2015	10:17:14	0.028	0.030
21-Oct-2015	10:21:14	0.028	0.028
21-Oct-2015	10:25:14	0.028	0.028
21-Oct-2015	10:29:14	0.028	0.028
21-Oct-2015	10:33:14	0.028	0.028
21-Oct-2015	10:37:14	0.028	0.028
21-Oct-2015	10:41:14	0.028	0.028
21-Oct-2015	10:45:14	0.028	0.028
21-Oct-2015	10:49:14	0.028	0.029
21-Oct-2015	10:53:14	0.030	0.029
21-Oct-2015	10:57:14	0.030	0.030
21-Oct-2015	11:01:14	0.030	0.030

DUST MONITORING

October 2015

shading indicates values over the threshold

Monitor: 3

Threshold: 0.15 (mg/m^3)

Date	Time	Value (mg/m^3)	TWA (mg/m^3)
21-Oct-2015	11:05:14	0.031	0.031
22-Oct-2015	07:15:01	0.003	0.003
22-Oct-2015	07:19:01	0.002	0.002
22-Oct-2015	07:23:01	0.002	0.020
22-Oct-2015	07:27:01	0.055	0.021
22-Oct-2015	07:31:01	0.007	0.022
22-Oct-2015	07:35:01	0.003	0.007
22-Oct-2015	07:39:01	0.011	0.005
22-Oct-2015	07:43:01	0.002	0.005
22-Oct-2015	07:47:01	0.002	0.003
22-Oct-2015	07:51:01	0.006	0.003
22-Oct-2015	07:55:01	0.002	0.004
22-Oct-2015	07:59:01	0.004	0.003
22-Oct-2015	08:03:01	0.003	0.003
22-Oct-2015	08:07:01	0.001	0.002
22-Oct-2015	08:11:01	0.002	0.001
22-Oct-2015	08:15:01	0.001	0.001
22-Oct-2015	08:19:01	0.001	0.002
22-Oct-2015	08:23:01	0.005	0.003
22-Oct-2015	08:27:01	0.002	0.002
22-Oct-2015	08:31:01	0.000	0.001
22-Oct-2015	08:35:01	0.002	0.002
22-Oct-2015	08:39:01	0.005	0.003
22-Oct-2015	08:43:01	0.002	0.003
22-Oct-2015	08:47:01	0.003	0.002
22-Oct-2015	08:51:01	0.000	0.001
22-Oct-2015	08:55:01	0.001	0.000
22-Oct-2015	08:59:01	0.000	0.001
22-Oct-2015	09:03:01	0.002	0.001
22-Oct-2015	09:07:01	0.001	0.002
22-Oct-2015	09:11:01	0.002	0.001
22-Oct-2015	09:15:01	0.001	0.001
22-Oct-2015	09:19:01	0.001	0.001
22-Oct-2015	09:23:01	0.001	0.002
22-Oct-2015	09:27:01	0.005	0.014
22-Oct-2015	09:31:01	0.036	0.014
22-Oct-2015	09:35:01	0.002	0.013
22-Oct-2015	09:39:01	0.002	0.002
22-Oct-2015	09:43:01	0.002	0.003
22-Oct-2015	09:47:01	0.004	0.003
22-Oct-2015	09:51:01	0.003	0.004

DUST MONITORING

October 2015

shading indicates values over the threshold

Monitor: 3

Threshold: 0.15 (mg/m^3)

Date	Time	Value (mg/m^3)	TWA (mg/m^3)
22-Oct-2015	09:55:01	0.005	0.004
22-Oct-2015	09:59:01	0.003	0.004
22-Oct-2015	10:03:01	0.005	0.005
22-Oct-2015	10:07:01	0.006	0.005
22-Oct-2015	10:11:01	0.003	0.003
22-Oct-2015	10:15:01	0.001	0.002
22-Oct-2015	10:19:01	0.001	0.001
22-Oct-2015	10:23:01	0.001	0.001
22-Oct-2015	10:27:01	0.000	0.001
22-Oct-2015	10:31:01	0.001	0.001
22-Oct-2015	10:35:01	0.002	0.001
22-Oct-2015	10:39:01	0.001	0.001
22-Oct-2015	10:43:01	0.001	0.001
22-Oct-2015	10:47:01	0.002	0.003
22-Oct-2015	10:51:01	0.005	0.003
22-Oct-2015	10:55:01	0.003	0.003
22-Oct-2015	10:59:01	0.000	0.001
22-Oct-2015	11:03:01	0.000	0.000
22-Oct-2015	11:07:01	0.000	0.000
22-Oct-2015	11:11:01	0.000	0.001
22-Oct-2015	11:15:01	0.002	0.001
22-Oct-2015	11:19:01	0.000	0.001
22-Oct-2015	11:23:01	0.000	0.000
22-Oct-2015	11:27:01	0.000	0.000
22-Oct-2015	11:31:01	0.000	0.000
22-Oct-2015	11:35:01	0.000	0.000
22-Oct-2015	11:39:01	0.001	0.000
22-Oct-2015	11:43:01	0.000	0.000
22-Oct-2015	11:47:01	0.000	0.000
22-Oct-2015	11:51:01	0.000	0.000
22-Oct-2015	11:55:01	0.001	0.000
22-Oct-2015	11:59:01	0.000	0.000
22-Oct-2015	12:03:01	0.000	0.000
22-Oct-2015	12:07:01	0.000	0.000
22-Oct-2015	12:11:01	0.000	0.007
22-Oct-2015	12:15:01	0.021	0.007
22-Oct-2015	12:19:01	0.000	0.007
22-Oct-2015	12:23:01	0.000	0.000
22-Oct-2015	12:27:01	0.000	0.000
22-Oct-2015	12:31:01	0.000	0.000
22-Oct-2015	12:35:01	0.000	0.000

DUST MONITORING

October 2015

shading indicates values over the threshold

Monitor: 3

Threshold: 0.15 (mg/m^3)

Date	Time	Value (mg/m^3)	TWA (mg/m^3)
22-Oct-2015	12:39:01	0.000	0.000
22-Oct-2015	12:43:01	0.000	0.000
22-Oct-2015	12:47:01	0.000	0.000
22-Oct-2015	12:51:01	0.000	0.000
22-Oct-2015	12:55:01	0.001	0.000
22-Oct-2015	12:59:01	0.000	0.000
22-Oct-2015	13:03:01	0.000	0.000
22-Oct-2015	13:07:01	0.000	0.000
22-Oct-2015	13:11:01	0.000	0.000
22-Oct-2015	13:15:01	0.000	0.000
22-Oct-2015	13:19:01	0.000	0.000
22-Oct-2015	13:23:01	0.000	0.001
22-Oct-2015	13:27:01	0.002	0.001
22-Oct-2015	13:31:01	0.000	0.001
22-Oct-2015	13:35:01	0.000	0.000
22-Oct-2015	13:39:01	0.000	0.008
22-Oct-2015	13:43:01	0.025	0.008
22-Oct-2015	13:47:01	0.000	0.008
22-Oct-2015	13:51:01	0.000	0.000
22-Oct-2015	13:55:01	0.000	0.000
22-Oct-2015	13:59:01	0.000	0.000
22-Oct-2015	14:03:01	0.001	0.000
22-Oct-2015	14:07:01	0.000	0.000
22-Oct-2015	14:11:01	0.000	0.000
22-Oct-2015	14:15:01	0.000	0.000
22-Oct-2015	14:19:01	0.000	0.001
22-Oct-2015	14:23:01	0.002	0.001
22-Oct-2015	14:27:01	0.000	0.001
22-Oct-2015	14:31:01	0.000	0.000
22-Oct-2015	14:35:01	0.000	0.005
22-Oct-2015	14:39:01	0.015	0.015
22-Oct-2015	14:43:01	0.030	0.015
22-Oct-2015	14:47:01	0.000	0.010
22-Oct-2015	14:51:01	0.000	0.003
22-Oct-2015	14:55:01	0.008	0.003
22-Oct-2015	14:59:01	0.002	0.003
22-Oct-2015	15:03:01	0.000	0.003
22-Oct-2015	15:07:01	0.006	0.002
22-Oct-2015	15:11:01	0.000	0.002
22-Oct-2015	15:15:01	0.000	0.002
22-Oct-2015	15:19:01	0.006	0.002

DUST MONITORING

October 2015

shading indicates values over the threshold

Monitor: 3

Threshold: 0.15 (mg/m^3)

Date	Time	Value (mg/m^3)	TWA (mg/m^3)
22-Oct-2015	15:23:01	0.000	0.002
22-Oct-2015	15:27:01	0.000	0.000
22-Oct-2015	15:31:01	0.000	0.000
22-Oct-2015	15:35:01	0.000	0.000
22-Oct-2015	15:39:01	0.001	0.000
22-Oct-2015	15:43:01	0.000	0.000
22-Oct-2015	15:47:01	0.000	0.000
22-Oct-2015	15:51:01	0.000	0.000
22-Oct-2015	15:55:01	0.000	0.000
22-Oct-2015	15:59:01	0.000	0.000
22-Oct-2015	16:03:01	0.000	0.000
22-Oct-2015	16:07:01	0.000	0.000
22-Oct-2015	16:11:01	0.000	0.000
22-Oct-2015	16:15:01	0.000	0.000
22-Oct-2015	16:19:01	0.000	0.000
22-Oct-2015	16:23:01	0.000	0.000
22-Oct-2015	16:27:01	0.000	0.000
22-Oct-2015	16:31:01	0.000	0.000
22-Oct-2015	16:35:01	0.000	0.000
22-Oct-2015	16:39:01	0.000	0.000
22-Oct-2015	16:43:01	0.000	0.000
22-Oct-2015	16:47:01	0.000	0.000
22-Oct-2015	16:51:01	0.000	0.000
22-Oct-2015	16:55:01	0.000	0.000
22-Oct-2015	16:59:01	0.000	0.001
22-Oct-2015	17:03:01	0.004	0.002
22-Oct-2015	17:07:01	0.002	0.002
22-Oct-2015	17:11:01	0.001	0.001
22-Oct-2015	17:15:01	0.000	0.002
22-Oct-2015	17:19:01	0.004	0.009
22-Oct-2015	17:23:01	0.024	0.010
22-Oct-2015	17:27:01	0.001	0.008
22-Oct-2015	17:31:01	0.000	0.000
22-Oct-2015	17:35:01	0.000	0.000
22-Oct-2015	17:39:01	0.000	0.000
22-Oct-2015	17:43:01	0.000	0.000
22-Oct-2015	17:47:01	0.000	0.000
22-Oct-2015	17:51:01	0.000	0.000
22-Oct-2015	17:55:01	0.000	0.000
22-Oct-2015	17:59:01	0.001	0.000
22-Oct-2015	18:03:01	0.000	0.000

DUST MONITORING

October 2015

shading indicates values over the threshold

Monitor: 3

Threshold: 0.15 (mg/m^3)

Date	Time	Value (mg/m^3)	TWA (mg/m^3)
22-Oct-2015	18:07:01	0.000	0.000
22-Oct-2015	18:11:01	0.000	0.000
22-Oct-2015	18:15:01	0.000	0.000
22-Oct-2015	18:19:01	0.000	0.000
22-Oct-2015	18:23:01	0.000	0.000
22-Oct-2015	18:27:01	0.000	0.000
22-Oct-2015	18:31:01	0.000	0.000
22-Oct-2015	18:35:01	0.000	0.000
22-Oct-2015	18:39:01	0.001	0.001
22-Oct-2015	18:43:01	0.001	0.001
22-Oct-2015	18:47:01	0.001	0.001
22-Oct-2015	18:51:01	0.000	0.001
22-Oct-2015	18:55:01	0.001	0.001
22-Oct-2015	18:59:01	0.001	0.001
22-Oct-2015	19:03:01	0.001	0.001
22-Oct-2015	19:07:01	0.001	0.001
22-Oct-2015	19:11:01	0.001	0.001
22-Oct-2015	19:15:01	0.001	0.002
22-Oct-2015	19:19:01	0.003	0.002
22-Oct-2015	19:23:01	0.002	0.002
22-Oct-2015	19:27:01	0.002	0.002
22-Oct-2015	19:31:01	0.002	0.002
22-Oct-2015	19:35:01	0.003	0.002
22-Oct-2015	19:39:01	0.002	0.002
22-Oct-2015	19:43:01	0.002	0.002
22-Oct-2015	19:47:01	0.003	0.003
22-Oct-2015	19:51:01	0.003	0.003
22-Oct-2015	19:55:01	0.003	0.003
22-Oct-2015	19:59:01	0.003	0.003
22-Oct-2015	20:03:01	0.003	0.003
22-Oct-2015	20:07:01	0.003	0.003
22-Oct-2015	20:11:01	0.004	0.003
22-Oct-2015	20:15:01	0.003	0.004
22-Oct-2015	20:19:01	0.004	0.004
22-Oct-2015	20:23:01	0.004	0.004
22-Oct-2015	20:27:01	0.003	0.003
22-Oct-2015	20:31:01	0.003	0.004
22-Oct-2015	20:35:01	0.005	0.004
22-Oct-2015	20:39:01	0.004	0.005
22-Oct-2015	20:43:01	0.005	0.005
22-Oct-2015	20:47:01	0.006	0.006

DUST MONITORING

October 2015

shading indicates values over the threshold

Monitor: 3

Threshold: 0.15 (mg/m^3)

Date	Time	Value (mg/m^3)	TWA (mg/m^3)
22-Oct-2015	20:51:01	0.006	0.006
22-Oct-2015	20:55:01	0.006	0.006
22-Oct-2015	20:59:01	0.006	0.006
22-Oct-2015	21:03:01	0.006	0.006
23-Oct-2015	07:07:16	0.034	0.029
23-Oct-2015	07:11:16	0.023	0.034
23-Oct-2015	07:15:16	0.044	0.037
23-Oct-2015	07:19:16	0.043	0.041
23-Oct-2015	07:23:16	0.035	0.040
23-Oct-2015	07:27:16	0.041	0.042
23-Oct-2015	07:31:16	0.050	0.045
23-Oct-2015	07:35:16	0.045	0.064
23-Oct-2015	07:39:16	0.098	0.074
23-Oct-2015	07:43:16	0.078	0.068
23-Oct-2015	07:47:16	0.027	0.046
23-Oct-2015	07:51:16	0.033	0.029
23-Oct-2015	07:55:16	0.028	0.029
23-Oct-2015	07:59:16	0.027	0.025
23-Oct-2015	08:03:16	0.019	0.019
23-Oct-2015	08:07:16	0.012	0.012
23-Oct-2015	08:11:16	0.006	0.007
23-Oct-2015	08:15:16	0.004	0.004
23-Oct-2015	08:19:16	0.003	0.003
23-Oct-2015	08:23:16	0.002	0.003
23-Oct-2015	08:27:16	0.004	0.003
23-Oct-2015	08:31:16	0.004	0.003
23-Oct-2015	08:35:16	0.001	0.002
23-Oct-2015	08:39:16	0.001	0.001
23-Oct-2015	08:43:16	0.000	0.001
23-Oct-2015	08:47:16	0.001	0.001
23-Oct-2015	08:51:16	0.001	0.001
23-Oct-2015	08:55:16	0.001	0.002
23-Oct-2015	08:59:16	0.003	0.001
23-Oct-2015	09:03:16	0.000	0.001
23-Oct-2015	09:07:16	0.000	0.000
23-Oct-2015	09:11:16	0.000	0.000
23-Oct-2015	09:15:16	0.000	0.000
23-Oct-2015	09:19:16	0.000	0.000
23-Oct-2015	09:23:16	0.000	0.000
23-Oct-2015	09:27:16	0.000	0.000
23-Oct-2015	09:31:16	0.000	0.000

DUST MONITORING

October 2015

shading indicates values over the threshold

Monitor: 3

Threshold: 0.15 (mg/m^3)

Date	Time	Value (mg/m^3)	TWA (mg/m^3)
23-Oct-2015	09:35:16	0.001	0.001
23-Oct-2015	09:39:16	0.001	0.002
23-Oct-2015	09:43:16	0.003	0.001
23-Oct-2015	09:47:16	0.000	0.001
23-Oct-2015	09:51:16	0.000	0.000
23-Oct-2015	09:55:16	0.000	0.000
23-Oct-2015	09:59:16	0.000	0.000
23-Oct-2015	10:03:16	0.000	0.000
23-Oct-2015	10:07:16	0.000	0.000
23-Oct-2015	10:11:16	0.000	0.000
23-Oct-2015	10:15:16	0.000	0.000
23-Oct-2015	10:19:16	0.000	0.000
23-Oct-2015	10:23:16	0.000	0.000
23-Oct-2015	10:27:16	0.000	0.000
23-Oct-2015	10:31:16	0.000	0.000
23-Oct-2015	10:35:16	0.000	0.000
23-Oct-2015	10:39:16	0.000	0.000
23-Oct-2015	10:43:16	0.000	0.000
23-Oct-2015	10:47:16	0.001	0.000
23-Oct-2015	10:51:16	0.000	0.000
23-Oct-2015	10:55:16	0.000	0.000
23-Oct-2015	10:59:16	0.000	0.002
23-Oct-2015	11:03:16	0.007	0.003
23-Oct-2015	11:07:16	0.003	0.003
23-Oct-2015	11:11:16	0.000	0.001
23-Oct-2015	11:15:16	0.000	0.000
23-Oct-2015	11:19:16	0.000	0.000
23-Oct-2015	11:23:16	0.000	0.000
23-Oct-2015	11:27:16	0.000	0.000
23-Oct-2015	11:31:16	0.000	0.000
23-Oct-2015	11:35:16	0.000	0.000
23-Oct-2015	11:39:16	0.001	0.009
23-Oct-2015	11:43:16	0.025	0.009
23-Oct-2015	11:47:16	0.001	0.009
23-Oct-2015	11:51:16	0.000	0.004
23-Oct-2015	11:55:16	0.011	0.010
23-Oct-2015	11:59:16	0.020	0.011
23-Oct-2015	12:03:16	0.001	0.015
23-Oct-2015	12:07:16	0.024	0.012
23-Oct-2015	12:11:16	0.010	0.011
23-Oct-2015	12:15:16	0.000	0.069

DUST MONITORING

October 2015

shading indicates values over the threshold

Monitor: 3

Threshold: 0.15 (mg/m^3)

Date	Time	Value (mg/m^3)	TWA (mg/m^3)
23-Oct-2015	12:19:16	0.197	0.067
23-Oct-2015	12:23:16	0.003	0.067
23-Oct-2015	12:27:16	0.000	0.001
23-Oct-2015	12:31:16	0.000	0.001
23-Oct-2015	12:35:16	0.002	0.001
23-Oct-2015	12:39:16	0.000	0.005
23-Oct-2015	12:43:16	0.012	0.004
23-Oct-2015	12:47:16	0.000	0.004
23-Oct-2015	12:51:16	0.001	0.013
23-Oct-2015	12:55:16	0.039	0.015
23-Oct-2015	12:59:16	0.006	0.017
23-Oct-2015	13:03:16	0.007	0.004
23-Oct-2015	13:07:16	0.000	0.003
23-Oct-2015	13:11:16	0.002	0.001
23-Oct-2015	13:15:16	0.001	0.001
23-Oct-2015	13:19:16	0.001	0.001
23-Oct-2015	13:23:16	0.000	0.000
23-Oct-2015	13:27:16	0.000	0.059
23-Oct-2015	13:31:16	0.176	0.059
23-Oct-2015	13:35:16	0.000	0.059
23-Oct-2015	13:39:16	0.000	0.000
23-Oct-2015	13:43:16	0.000	0.000
23-Oct-2015	13:47:16	0.000	0.321
23-Oct-2015	13:51:16	0.963	0.350
23-Oct-2015	13:55:16	0.087	0.354
23-Oct-2015	13:59:16	0.012	0.049
23-Oct-2015	14:03:16	0.049	0.031

DUST MONITORING

November 2015

shading indicates values over the threshold

Monitor: 1

Threshold: 0.15 (mg/m^3)

Date	Time	Value (mg/m^3)	TWA (mg/m^3)
4-Nov-2015	14:18:53	0.006	0.007
4-Nov-2015	14:22:53	0.007	0.005
4-Nov-2015	14:26:53	0.002	0.004
4-Nov-2015	14:30:53	0.002	0.002
4-Nov-2015	14:34:53	0.001	0.002
4-Nov-2015	14:38:53	0.003	0.004
4-Nov-2015	14:42:53	0.009	0.005
4-Nov-2015	14:46:53	0.002	0.005
4-Nov-2015	14:50:53	0.004	0.002
4-Nov-2015	14:54:53	0.001	0.002
4-Nov-2015	14:58:53	0.001	0.003
4-Nov-2015	15:02:53	0.008	0.007
4-Nov-2015	15:06:53	0.012	0.009
4-Nov-2015	15:10:53	0.006	0.007
4-Nov-2015	15:14:53	0.002	0.008
4-Nov-2015	15:18:53	0.016	0.009
4-Nov-2015	15:22:53	0.009	0.011
4-Nov-2015	15:26:53	0.007	0.007
4-Nov-2015	15:30:53	0.004	0.009
4-Nov-2015	15:34:53	0.015	0.017
4-Nov-2015	15:38:53	0.033	0.022
4-Nov-2015	15:42:53	0.019	0.020
4-Nov-2015	15:46:53	0.007	0.011
4-Nov-2015	15:50:53	0.008	0.006
4-Nov-2015	15:54:53	0.003	0.005
4-Nov-2015	15:58:53	0.003	0.004
4-Nov-2015	16:02:53	0.005	0.009
4-Nov-2015	16:06:53	0.020	0.017
4-Nov-2015	16:10:53	0.025	0.021
4-Nov-2015	16:14:53	0.017	0.017
4-Nov-2015	16:18:53	0.008	0.011
4-Nov-2015	16:22:53	0.007	0.008
4-Nov-2015	16:26:53	0.008	0.007
4-Nov-2015	16:30:53	0.005	0.010
4-Nov-2015	16:34:53	0.016	0.024
4-Nov-2015	16:38:53	0.051	0.031
4-Nov-2015	16:42:53	0.026	0.030
4-Nov-2015	16:46:53	0.013	0.019
4-Nov-2015	16:50:53	0.018	0.014
4-Nov-2015	16:54:53	0.012	0.013
4-Nov-2015	16:58:53	0.008	0.012

DUST MONITORING

November 2015

shading indicates values over the threshold

Monitor: 1

Threshold: 0.15 (mg/m^3)

Date	Time	Value (mg/m^3)	TWA (mg/m^3)
4-Nov-2015	17:02:53	0.016	0.011
4-Nov-2015	17:06:53	0.008	0.014
4-Nov-2015	17:10:53	0.018	0.013
4-Nov-2015	17:14:53	0.013	0.015
4-Nov-2015	17:18:53	0.015	0.013
4-Nov-2015	17:22:53	0.010	0.011
4-Nov-2015	17:26:53	0.008	0.009
4-Nov-2015	17:30:53	0.008	0.008
4-Nov-2015	17:34:53	0.009	0.008
4-Nov-2015	17:38:53	0.008	0.009
5-Nov-2015	07:57:14	0.023	0.024
5-Nov-2015	08:01:14	0.025	0.025
5-Nov-2015	08:05:14	0.026	0.025
5-Nov-2015	08:09:14	0.025	0.025
5-Nov-2015	08:13:14	0.024	0.024
5-Nov-2015	08:17:14	0.023	0.027
5-Nov-2015	08:21:14	0.035	0.027
5-Nov-2015	08:25:14	0.022	0.028
5-Nov-2015	08:29:14	0.028	0.027
5-Nov-2015	08:33:14	0.030	0.030
5-Nov-2015	08:37:14	0.033	0.030
5-Nov-2015	08:41:14	0.028	0.028
5-Nov-2015	08:45:14	0.024	0.024
5-Nov-2015	08:49:14	0.019	0.022
5-Nov-2015	08:53:14	0.023	0.019
5-Nov-2015	08:57:14	0.015	0.018
5-Nov-2015	09:01:14	0.015	0.015
5-Nov-2015	09:05:14	0.016	0.016
5-Nov-2015	09:09:14	0.016	0.019
5-Nov-2015	09:13:14	0.026	0.021
5-Nov-2015	09:17:14	0.022	0.023
5-Nov-2015	09:21:14	0.021	0.024
5-Nov-2015	09:25:14	0.028	0.023
5-Nov-2015	09:29:14	0.019	0.037
5-Nov-2015	09:33:14	0.064	0.037
5-Nov-2015	09:37:14	0.029	0.038
5-Nov-2015	09:41:14	0.021	0.025
5-Nov-2015	09:45:14	0.026	0.022
5-Nov-2015	09:49:14	0.018	0.023
5-Nov-2015	09:53:14	0.026	0.019
5-Nov-2015	09:57:14	0.014	0.019

DUST MONITORING

November 2015

shading indicates values over the threshold

Monitor: 1

Threshold: 0.15 (mg/m^3)

Date	Time	Value (mg/m^3)	TWA (mg/m^3)
5-Nov-2015	10:01:14	0.016	0.015
5-Nov-2015	10:05:14	0.014	0.017
5-Nov-2015	10:09:14	0.022	0.019
5-Nov-2015	10:13:14	0.021	0.017
5-Nov-2015	10:17:14	0.008	0.016
5-Nov-2015	10:21:14	0.018	0.012
5-Nov-2015	10:25:14	0.010	0.013
5-Nov-2015	10:29:14	0.010	0.011
5-Nov-2015	10:33:14	0.012	0.011
5-Nov-2015	10:37:14	0.011	0.017
5-Nov-2015	10:41:14	0.028	0.015
5-Nov-2015	10:45:14	0.007	0.015
5-Nov-2015	10:49:14	0.009	0.008
13-Nov-2015	08:05:59	0.000	0.000
13-Nov-2015	08:09:59	0.000	0.000
13-Nov-2015	08:13:59	0.000	0.000
13-Nov-2015	08:17:59	0.000	0.000
13-Nov-2015	08:21:59	0.000	0.000
13-Nov-2015	08:25:59	0.000	0.000
13-Nov-2015	08:29:59	0.000	0.000
13-Nov-2015	08:33:59	0.000	0.000
13-Nov-2015	08:37:59	0.001	0.000
13-Nov-2015	08:41:59	0.000	0.000
13-Nov-2015	08:45:59	0.000	0.000
13-Nov-2015	08:49:59	0.000	0.000
13-Nov-2015	08:53:59	0.000	0.000
13-Nov-2015	08:57:59	0.000	0.000
13-Nov-2015	09:01:59	0.000	0.000
13-Nov-2015	09:05:59	0.000	0.000
13-Nov-2015	09:09:59	0.000	0.000
13-Nov-2015	09:13:59	0.000	0.000
13-Nov-2015	09:17:59	0.000	0.000
13-Nov-2015	09:21:59	0.000	0.000
13-Nov-2015	09:25:59	0.000	0.000
13-Nov-2015	09:29:59	0.000	0.000
13-Nov-2015	09:33:59	0.000	0.000
13-Nov-2015	09:37:59	0.000	0.000
13-Nov-2015	09:41:59	0.000	0.000
13-Nov-2015	09:45:59	0.000	0.000
13-Nov-2015	09:49:59	0.000	0.000
13-Nov-2015	09:53:59	0.000	0.000

DUST MONITORING

November 2015

shading indicates values over the threshold

Monitor: 1

Threshold: 0.15 (mg/m^3)

Date	Time	Value (mg/m^3)	TWA (mg/m^3)
13-Nov-2015	09:57:59	0.000	0.000
13-Nov-2015	10:01:59	0.000	0.000
13-Nov-2015	10:05:59	0.000	0.000
13-Nov-2015	10:09:59	0.000	0.000
13-Nov-2015	10:13:59	0.000	0.000
13-Nov-2015	10:17:59	0.000	0.000
13-Nov-2015	10:21:59	0.000	0.000
13-Nov-2015	10:25:59	0.000	0.000
13-Nov-2015	10:29:59	0.000	0.000
13-Nov-2015	10:33:59	0.000	0.000
13-Nov-2015	10:37:59	0.000	0.000
13-Nov-2015	10:41:59	0.000	0.000
13-Nov-2015	10:45:59	0.000	0.000
13-Nov-2015	10:49:59	0.000	0.000
13-Nov-2015	10:53:59	0.000	0.000
13-Nov-2015	10:57:59	0.000	0.000
13-Nov-2015	11:01:59	0.000	0.000
13-Nov-2015	11:05:59	0.000	0.000
13-Nov-2015	11:09:59	0.000	0.000
13-Nov-2015	11:13:59	0.000	0.000
13-Nov-2015	11:17:59	0.000	0.000
13-Nov-2015	11:21:59	0.001	0.000
13-Nov-2015	11:25:59	0.000	0.001
13-Nov-2015	11:29:59	0.001	0.000
13-Nov-2015	11:33:59	0.000	0.000
13-Nov-2015	11:37:59	0.000	0.000
13-Nov-2015	11:41:59	0.000	0.009
13-Nov-2015	11:45:59	0.028	0.010
13-Nov-2015	11:49:59	0.001	0.010
13-Nov-2015	11:53:59	0.000	0.000
13-Nov-2015	11:57:59	0.000	0.000
13-Nov-2015	12:01:59	0.000	0.000
13-Nov-2015	12:05:59	0.000	0.000
13-Nov-2015	12:09:59	0.000	0.000
13-Nov-2015	12:13:59	0.000	0.000
13-Nov-2015	12:17:59	0.000	0.006
13-Nov-2015	12:21:59	0.018	0.006
13-Nov-2015	12:25:59	0.000	0.006
13-Nov-2015	12:29:59	0.000	0.000
13-Nov-2015	12:33:59	0.000	0.000
13-Nov-2015	12:37:59	0.000	0.000

DUST MONITORING

November 2015

shading indicates values over the threshold

Monitor: 1

Threshold: 0.15 (mg/m^3)

Date	Time	Value (mg/m^3)	TWA (mg/m^3)
13-Nov-2015	12:41:59	0.000	0.000
13-Nov-2015	12:45:59	0.000	0.000
13-Nov-2015	12:49:59	0.000	0.000
13-Nov-2015	12:53:59	0.000	0.002
13-Nov-2015	12:57:59	0.006	0.002
13-Nov-2015	13:01:59	0.000	0.002
13-Nov-2015	13:05:59	0.000	0.000
13-Nov-2015	13:09:59	0.000	0.000
13-Nov-2015	13:13:59	0.000	0.000
13-Nov-2015	13:17:59	0.001	0.000
13-Nov-2015	13:21:59	0.000	0.000
13-Nov-2015	13:25:59	0.000	0.000
13-Nov-2015	13:29:59	0.000	0.000
13-Nov-2015	13:33:59	0.000	0.000
13-Nov-2015	13:37:59	0.000	0.003
13-Nov-2015	13:41:59	0.008	0.005
13-Nov-2015	13:45:59	0.006	0.005
13-Nov-2015	13:49:59	0.000	0.004
13-Nov-2015	13:53:59	0.006	0.002
13-Nov-2015	13:57:59	0.000	0.002
13-Nov-2015	14:01:59	0.000	0.000
13-Nov-2015	14:05:59	0.000	0.000
13-Nov-2015	14:09:59	0.000	0.000
13-Nov-2015	14:13:59	0.000	0.000
13-Nov-2015	14:17:59	0.000	0.000
13-Nov-2015	14:21:59	0.000	0.000
13-Nov-2015	14:25:59	0.000	0.000
13-Nov-2015	14:29:59	0.000	0.004
13-Nov-2015	14:33:59	0.012	0.004
13-Nov-2015	14:37:59	0.000	0.004
13-Nov-2015	14:41:59	0.000	0.000
13-Nov-2015	14:45:59	0.000	0.000
13-Nov-2015	14:49:59	0.000	0.000
13-Nov-2015	14:53:59	0.000	0.000
13-Nov-2015	14:57:59	0.000	0.000
13-Nov-2015	15:01:59	0.000	0.000
13-Nov-2015	15:05:59	0.000	0.000
13-Nov-2015	15:09:59	0.000	0.000
13-Nov-2015	15:13:59	0.000	0.000
13-Nov-2015	15:17:59	0.000	0.000
13-Nov-2015	15:21:59	0.000	0.000

DUST MONITORING

November 2015

shading indicates values over the threshold

Monitor: 1

Threshold: 0.15 (mg/m^3)

Date	Time	Value (mg/m^3)	TWA (mg/m^3)
13-Nov-2015	15:25:59	0.000	0.001
13-Nov-2015	15:29:59	0.004	0.001
13-Nov-2015	15:33:59	0.000	0.001
13-Nov-2015	15:37:59	0.000	0.000
13-Nov-2015	15:41:59	0.000	0.000
13-Nov-2015	15:45:59	0.000	0.000
13-Nov-2015	15:49:59	0.000	0.000
13-Nov-2015	15:53:59	0.000	0.000
13-Nov-2015	15:57:59	0.000	0.000
13-Nov-2015	16:01:59	0.000	0.000
13-Nov-2015	16:05:59	0.000	0.000
13-Nov-2015	16:09:59	0.000	0.000
13-Nov-2015	16:13:59	0.000	0.000
13-Nov-2015	16:17:59	0.000	0.000
13-Nov-2015	16:21:59	0.000	0.000
13-Nov-2015	16:25:59	0.000	0.000
13-Nov-2015	16:29:59	0.000	0.000
13-Nov-2015	16:33:59	0.000	0.000
13-Nov-2015	16:37:59	0.000	0.000
13-Nov-2015	16:41:59	0.000	0.000
13-Nov-2015	16:45:59	0.000	0.000
16-Nov-2015	08:47:17	0.014	0.011
16-Nov-2015	08:51:17	0.007	0.009
16-Nov-2015	08:55:17	0.007	0.007
16-Nov-2015	08:59:17	0.006	0.006
16-Nov-2015	09:03:17	0.005	0.006
16-Nov-2015	09:07:17	0.008	0.006
16-Nov-2015	09:11:17	0.006	0.006
16-Nov-2015	09:15:17	0.005	0.006
16-Nov-2015	09:19:17	0.006	0.006
16-Nov-2015	09:23:17	0.006	0.006
16-Nov-2015	09:27:17	0.005	0.007
16-Nov-2015	09:31:17	0.010	0.007
16-Nov-2015	09:35:17	0.007	0.008
16-Nov-2015	09:39:17	0.006	0.007
16-Nov-2015	09:43:17	0.007	0.010
16-Nov-2015	09:47:17	0.017	0.011
16-Nov-2015	09:51:17	0.010	0.012
16-Nov-2015	09:55:17	0.010	0.011
16-Nov-2015	09:59:17	0.013	0.011
16-Nov-2015	10:03:17	0.009	0.010

DUST MONITORING

November 2015

shading indicates values over the threshold

Monitor: 1

Threshold: 0.15 (mg/m^3)

Date	Time	Value (mg/m^3)	TWA (mg/m^3)
16-Nov-2015	10:07:17	0.008	0.008
16-Nov-2015	10:11:17	0.008	0.008
16-Nov-2015	10:15:17	0.009	0.012
16-Nov-2015	10:19:17	0.018	0.013
16-Nov-2015	10:23:17	0.013	0.017
16-Nov-2015	10:27:17	0.019	0.019
16-Nov-2015	10:31:17	0.024	0.017
16-Nov-2015	10:35:17	0.009	0.014
16-Nov-2015	10:39:17	0.010	0.009
16-Nov-2015	10:43:17	0.008	0.008
16-Nov-2015	10:47:17	0.007	0.009
16-Nov-2015	10:51:17	0.011	0.010
16-Nov-2015	10:55:17	0.012	0.010
16-Nov-2015	10:59:17	0.007	0.013
16-Nov-2015	11:03:17	0.019	0.014
16-Nov-2015	11:07:17	0.015	0.020
16-Nov-2015	11:11:17	0.025	0.020
16-Nov-2015	11:15:17	0.019	0.018
16-Nov-2015	11:19:17	0.011	0.015
16-Nov-2015	11:23:17	0.015	0.012
16-Nov-2015	11:27:17	0.009	0.011
16-Nov-2015	11:31:17	0.009	0.011
16-Nov-2015	11:35:17	0.016	0.012
16-Nov-2015	11:39:17	0.011	0.015
16-Nov-2015	11:43:17	0.017	0.013
16-Nov-2015	11:47:17	0.011	0.013
16-Nov-2015	11:51:17	0.012	0.012
16-Nov-2015	11:55:17	0.014	0.013
16-Nov-2015	11:59:17	0.013	0.011
16-Nov-2015	12:03:17	0.007	0.009
16-Nov-2015	12:07:17	0.007	0.007
16-Nov-2015	12:11:17	0.008	0.008
16-Nov-2015	12:15:17	0.008	0.008
16-Nov-2015	12:19:17	0.007	0.007
16-Nov-2015	12:23:17	0.007	0.009
16-Nov-2015	12:27:17	0.012	0.009
16-Nov-2015	12:31:17	0.007	0.010
16-Nov-2015	12:35:17	0.010	0.008
16-Nov-2015	12:39:17	0.008	0.009
16-Nov-2015	12:43:17	0.008	0.009
16-Nov-2015	12:47:17	0.010	0.009

DUST MONITORING

November 2015

shading indicates values over the threshold

Monitor: 1

Threshold: 0.15 (mg/m^3)

Date	Time	Value (mg/m^3)	TWA (mg/m^3)
16-Nov-2015	12:51:17	0.010	0.009
16-Nov-2015	12:55:17	0.007	0.008
16-Nov-2015	12:59:17	0.008	0.008
16-Nov-2015	13:03:17	0.008	0.008
16-Nov-2015	13:07:17	0.008	0.008
16-Nov-2015	13:11:17	0.009	0.008
16-Nov-2015	13:15:17	0.008	0.021
16-Nov-2015	13:19:17	0.047	0.023
16-Nov-2015	13:23:17	0.015	0.024
16-Nov-2015	13:27:17	0.009	0.011
16-Nov-2015	13:31:17	0.010	0.009
16-Nov-2015	13:35:17	0.008	0.009
16-Nov-2015	13:39:17	0.008	0.008
16-Nov-2015	13:43:17	0.008	0.008
16-Nov-2015	13:47:17	0.008	0.008
16-Nov-2015	13:51:17	0.009	0.008
16-Nov-2015	13:55:17	0.008	0.008
16-Nov-2015	13:59:17	0.008	0.009
16-Nov-2015	14:03:17	0.010	0.010
16-Nov-2015	14:07:17	0.012	0.010
16-Nov-2015	14:11:17	0.009	0.012
16-Nov-2015	14:15:17	0.015	0.014
16-Nov-2015	14:19:17	0.018	0.014
16-Nov-2015	14:23:17	0.008	0.012
16-Nov-2015	14:27:17	0.010	0.009
16-Nov-2015	14:31:17	0.008	0.008
16-Nov-2015	14:35:17	0.007	0.008
16-Nov-2015	14:39:17	0.008	0.008
16-Nov-2015	14:43:17	0.008	0.008
16-Nov-2015	14:47:17	0.008	0.008
16-Nov-2015	14:51:17	0.008	0.009
16-Nov-2015	14:55:17	0.010	0.009
16-Nov-2015	14:59:17	0.009	0.009
16-Nov-2015	15:03:17	0.009	0.009
16-Nov-2015	15:07:17	0.009	0.011
16-Nov-2015	15:11:17	0.015	0.011
16-Nov-2015	15:15:17	0.010	0.022
16-Nov-2015	15:19:17	0.041	0.025
16-Nov-2015	15:23:17	0.025	0.025
16-Nov-2015	15:27:17	0.009	0.015
16-Nov-2015	15:31:17	0.010	0.009

DUST MONITORING

November 2015

shading indicates values over the threshold

Monitor: 1

Threshold: 0.15 (mg/m^3)

Date	Time	Value (mg/m^3)	TWA (mg/m^3)
16-Nov-2015	15:35:17	0.009	0.010
16-Nov-2015	15:39:17	0.010	0.010
16-Nov-2015	15:43:17	0.010	0.010
16-Nov-2015	15:47:17	0.010	0.010
16-Nov-2015	15:51:17	0.010	0.011
16-Nov-2015	15:55:17	0.012	0.011
16-Nov-2015	15:59:17	0.010	0.011
16-Nov-2015	16:03:17	0.010	0.010
16-Nov-2015	16:07:17	0.010	0.010
16-Nov-2015	16:11:17	0.011	0.011
16-Nov-2015	16:15:17	0.012	0.013
16-Nov-2015	16:19:17	0.017	0.014
16-Nov-2015	16:23:17	0.013	0.014
16-Nov-2015	16:27:17	0.012	0.013
16-Nov-2015	16:31:17	0.013	0.013
16-Nov-2015	16:35:17	0.014	0.013
16-Nov-2015	16:39:17	0.012	0.013
16-Nov-2015	16:43:17	0.013	0.013
16-Nov-2015	16:47:17	0.013	0.013
16-Nov-2015	16:51:17	0.012	0.013
16-Nov-2015	16:55:17	0.013	0.013
16-Nov-2015	16:59:17	0.013	0.013
16-Nov-2015	17:03:17	0.013	0.014
16-Nov-2015	17:07:17	0.017	0.015
16-Nov-2015	17:11:17	0.014	0.018
16-Nov-2015	17:15:17	0.022	0.023
16-Nov-2015	17:19:17	0.034	0.025
16-Nov-2015	17:23:17	0.018	0.022
16-Nov-2015	17:27:17	0.014	0.015
16-Nov-2015	17:31:17	0.014	0.015
16-Nov-2015	17:35:17	0.017	0.016
16-Nov-2015	17:39:17	0.016	0.017
16-Nov-2015	17:43:17	0.017	0.017
16-Nov-2015	17:47:17	0.018	0.020
16-Nov-2015	17:51:17	0.025	0.022
16-Nov-2015	17:55:17	0.024	0.023
16-Nov-2015	17:59:17	0.020	0.020
16-Nov-2015	18:03:17	0.017	0.019
16-Nov-2015	18:07:17	0.019	0.018
16-Nov-2015	18:11:17	0.019	0.019
16-Nov-2015	18:15:17	0.018	0.019

DUST MONITORING

November 2015

shading indicates values over the threshold

Monitor: 1

Threshold: 0.15 (mg/m^3)

Date	Time	Value (mg/m^3)	TWA (mg/m^3)
16-Nov-2015	18:19:17	0.019	0.018
16-Nov-2015	18:23:17	0.017	0.018
16-Nov-2015	18:27:17	0.018	0.017
16-Nov-2015	18:31:17	0.017	0.017
16-Nov-2015	18:35:17	0.017	0.017
16-Nov-2015	18:39:17	0.017	0.018
16-Nov-2015	18:43:17	0.019	0.018
16-Nov-2015	18:47:17	0.019	0.019
16-Nov-2015	18:51:17	0.020	0.019
16-Nov-2015	18:55:17	0.019	0.019
16-Nov-2015	18:59:17	0.018	0.019
16-Nov-2015	19:03:17	0.019	0.019
16-Nov-2015	19:07:17	0.019	0.019
16-Nov-2015	19:11:17	0.019	0.019
16-Nov-2015	19:15:17	0.019	0.019
16-Nov-2015	19:19:17	0.018	0.019
16-Nov-2015	19:23:17	0.019	0.019
16-Nov-2015	19:27:17	0.019	0.019
16-Nov-2015	19:31:17	0.019	0.019
16-Nov-2015	19:35:17	0.019	0.019
16-Nov-2015	19:39:17	0.019	0.020
16-Nov-2015	19:43:17	0.021	0.020
16-Nov-2015	19:47:17	0.020	0.021
16-Nov-2015	19:51:17	0.022	0.021
16-Nov-2015	19:55:17	0.020	0.021
16-Nov-2015	19:59:17	0.020	0.020
16-Nov-2015	20:03:17	0.020	0.020
23-Nov-2015	11:05:44	0.005	0.005
23-Nov-2015	11:09:44	0.004	0.004
23-Nov-2015	11:13:44	0.002	0.003
23-Nov-2015	11:17:44	0.004	0.004
23-Nov-2015	11:21:44	0.006	0.006
23-Nov-2015	11:25:44	0.008	0.008
23-Nov-2015	11:29:44	0.010	0.009
23-Nov-2015	11:33:44	0.008	0.008
23-Nov-2015	11:37:44	0.007	0.008
23-Nov-2015	11:41:44	0.008	0.008
23-Nov-2015	11:45:44	0.010	0.011
23-Nov-2015	11:49:44	0.014	0.010
23-Nov-2015	11:53:44	0.007	0.012
23-Nov-2015	11:57:44	0.014	0.010

DUST MONITORING

November 2015

shading indicates values over the threshold

Monitor: 1

Threshold: 0.15 (mg/m^3)

Date	Time	Value (mg/m^3)	TWA (mg/m^3)
23-Nov-2015	12:01:44	0.008	0.010
23-Nov-2015	12:05:44	0.008	0.008
23-Nov-2015	12:09:44	0.008	0.008
23-Nov-2015	12:13:44	0.009	0.009
23-Nov-2015	12:17:44	0.009	0.009
23-Nov-2015	12:21:44	0.010	0.010
23-Nov-2015	12:25:44	0.011	0.010
23-Nov-2015	12:29:44	0.009	0.010
23-Nov-2015	12:33:44	0.011	0.010
23-Nov-2015	12:37:44	0.011	0.010
23-Nov-2015	12:41:44	0.009	0.010
23-Nov-2015	12:45:44	0.010	0.010
23-Nov-2015	12:49:44	0.011	0.012
23-Nov-2015	12:53:44	0.015	0.014
23-Nov-2015	12:57:44	0.015	0.015
23-Nov-2015	13:01:44	0.014	0.013
23-Nov-2015	13:05:44	0.010	0.014
23-Nov-2015	13:09:44	0.017	0.012
23-Nov-2015	13:13:44	0.010	0.013
23-Nov-2015	13:17:44	0.013	0.012
23-Nov-2015	13:21:44	0.013	0.014
23-Nov-2015	13:25:44	0.015	0.014
23-Nov-2015	13:29:44	0.013	0.014
23-Nov-2015	13:33:44	0.013	0.013
23-Nov-2015	13:37:44	0.013	0.012
23-Nov-2015	13:41:44	0.011	0.012
23-Nov-2015	13:45:44	0.012	0.012
23-Nov-2015	13:49:44	0.012	0.011
23-Nov-2015	13:53:44	0.010	0.011
23-Nov-2015	13:57:44	0.010	0.012
23-Nov-2015	14:01:44	0.015	0.014
23-Nov-2015	14:05:44	0.017	0.014
23-Nov-2015	14:09:44	0.010	0.012
23-Nov-2015	14:13:44	0.009	0.009
23-Nov-2015	14:17:44	0.007	0.008
23-Nov-2015	14:21:44	0.007	0.007
23-Nov-2015	14:25:44	0.007	0.007
23-Nov-2015	14:29:44	0.007	0.007
23-Nov-2015	14:33:44	0.007	0.007
23-Nov-2015	14:37:44	0.008	0.008
23-Nov-2015	14:41:44	0.008	0.008

DUST MONITORING

November 2015

shading indicates values over the threshold

Monitor: 1

Threshold: 0.15 (mg/m^3)

Date	Time	Value (mg/m^3)	TWA (mg/m^3)
23-Nov-2015	14:45:44	0.008	0.008
23-Nov-2015	14:49:44	0.007	0.007
23-Nov-2015	14:53:44	0.007	0.007
23-Nov-2015	14:57:44	0.007	0.009
23-Nov-2015	15:01:44	0.013	0.009
23-Nov-2015	15:05:44	0.008	0.009
23-Nov-2015	15:09:44	0.007	0.007
23-Nov-2015	15:13:44	0.007	0.007
23-Nov-2015	15:17:44	0.007	0.007
23-Nov-2015	15:21:44	0.008	0.008
23-Nov-2015	15:25:44	0.008	0.010
23-Nov-2015	15:29:44	0.013	0.011
24-Nov-2015	10:44:25	0.043	0.042
24-Nov-2015	10:48:25	0.040	0.039
24-Nov-2015	10:52:25	0.034	0.036
24-Nov-2015	10:56:25	0.035	0.035
24-Nov-2015	11:00:25	0.036	0.034
24-Nov-2015	11:04:25	0.031	0.032
24-Nov-2015	11:08:25	0.029	0.031
24-Nov-2015	11:12:25	0.034	0.033
24-Nov-2015	11:16:25	0.037	0.034
24-Nov-2015	11:20:25	0.032	0.032
24-Nov-2015	11:24:25	0.027	0.030
24-Nov-2015	11:28:25	0.031	0.027
24-Nov-2015	11:32:25	0.024	0.028
24-Nov-2015	11:36:25	0.028	0.025
24-Nov-2015	11:40:25	0.024	0.025
24-Nov-2015	11:44:25	0.024	0.024
24-Nov-2015	11:48:25	0.023	0.024
24-Nov-2015	11:52:25	0.026	0.024
24-Nov-2015	11:56:25	0.023	0.024
24-Nov-2015	12:00:25	0.023	0.022
24-Nov-2015	12:04:25	0.021	0.022
24-Nov-2015	12:08:25	0.023	0.022
24-Nov-2015	12:12:25	0.023	0.022
24-Nov-2015	12:16:25	0.021	0.022
24-Nov-2015	12:20:25	0.022	0.021
24-Nov-2015	12:24:25	0.020	0.020
24-Nov-2015	12:28:25	0.017	0.018
24-Nov-2015	12:32:25	0.017	0.016
24-Nov-2015	12:36:25	0.013	0.013

DUST MONITORING

November 2015

shading indicates values over the threshold

Monitor: 1

Threshold: 0.15 (mg/m^3)

Date	Time	Value (mg/m^3)	TWA (mg/m^3)
24-Nov-2015	12:40:25	0.010	0.012
24-Nov-2015	12:44:25	0.012	0.010
24-Nov-2015	12:48:25	0.009	0.010
24-Nov-2015	12:52:25	0.010	0.011
24-Nov-2015	12:56:25	0.014	0.013
24-Nov-2015	13:00:25	0.015	0.016
24-Nov-2015	13:04:25	0.018	0.018
24-Nov-2015	13:08:25	0.021	0.019
24-Nov-2015	13:12:25	0.019	0.021
24-Nov-2015	13:16:25	0.023	0.020
24-Nov-2015	13:20:25	0.018	0.020
24-Nov-2015	13:24:25	0.018	0.018
24-Nov-2015	13:28:25	0.018	0.018
24-Nov-2015	13:32:25	0.018	0.018
24-Nov-2015	13:36:25	0.018	0.018
24-Nov-2015	13:40:25	0.019	0.018
24-Nov-2015	13:44:25	0.017	0.019
24-Nov-2015	13:48:25	0.020	0.018
24-Nov-2015	13:52:25	0.018	0.018
24-Nov-2015	13:56:25	0.017	0.018
24-Nov-2015	14:00:25	0.019	0.018
24-Nov-2015	14:04:25	0.019	0.019
24-Nov-2015	14:08:25	0.019	0.020
24-Nov-2015	14:12:25	0.022	0.022
24-Nov-2015	14:16:25	0.026	0.022
24-Nov-2015	14:20:25	0.018	0.019
24-Nov-2015	14:24:25	0.014	0.016
24-Nov-2015	14:28:25	0.015	0.014
24-Nov-2015	14:32:25	0.014	0.014
24-Nov-2015	14:36:25	0.013	0.013
24-Nov-2015	14:40:25	0.012	0.013
24-Nov-2015	14:44:25	0.015	0.014
24-Nov-2015	14:48:25	0.016	0.015
24-Nov-2015	14:52:25	0.013	0.014
24-Nov-2015	14:56:25	0.013	0.012
24-Nov-2015	15:00:25	0.010	0.012
24-Nov-2015	15:04:25	0.012	0.011
24-Nov-2015	15:08:25	0.011	0.011
24-Nov-2015	15:12:25	0.011	0.011
24-Nov-2015	15:16:25	0.011	0.010
24-Nov-2015	15:20:25	0.009	0.010

DUST MONITORING

November 2015

shading indicates values over the threshold

Monitor: 1

Threshold: 0.15 (mg/m^3)

Date	Time	Value (mg/m^3)	TWA (mg/m^3)
24-Nov-2015	15:24:25	0.009	0.009
24-Nov-2015	15:28:25	0.010	0.011
24-Nov-2015	15:32:25	0.014	0.013
24-Nov-2015	15:36:25	0.014	0.014
24-Nov-2015	15:40:25	0.013	0.014
24-Nov-2015	15:44:25	0.015	0.014
24-Nov-2015	15:48:25	0.014	0.014
24-Nov-2015	15:52:25	0.014	0.014
24-Nov-2015	15:56:25	0.013	0.014
24-Nov-2015	16:00:25	0.014	0.020
24-Nov-2015	16:04:25	0.034	0.023
24-Nov-2015	16:08:25	0.020	0.023
24-Nov-2015	16:12:25	0.015	0.016
24-Nov-2015	16:16:25	0.014	0.016
24-Nov-2015	16:20:25	0.019	0.018
24-Nov-2015	16:24:25	0.021	0.021
24-Nov-2015	16:28:25	0.023	0.022
24-Nov-2015	16:32:25	0.021	0.022
24-Nov-2015	16:36:25	0.023	0.026
24-Nov-2015	16:40:25	0.035	0.028
24-Nov-2015	16:44:25	0.027	0.029
24-Nov-2015	16:48:25	0.024	0.025
24-Nov-2015	16:52:25	0.023	0.029
24-Nov-2015	16:56:25	0.041	0.035
24-Nov-2015	17:00:25	0.041	0.039
24-Nov-2015	17:04:25	0.036	0.035
24-Nov-2015	17:08:25	0.028	0.039
24-Nov-2015	17:12:25	0.054	0.046
24-Nov-2015	17:16:25	0.057	0.046
24-Nov-2015	17:20:25	0.028	0.036
24-Nov-2015	17:24:25	0.023	0.026

DUST MONITORING

November 2015

shading indicates values over the threshold

Monitor: 2

Threshold: 0.15 (mg/m^3)

Date	Time	Value (mg/m^3)	TWA (mg/m^3)
4-Nov-2015	14:18:55	0.064	0.064
4-Nov-2015	14:22:55	0.064	0.062
4-Nov-2015	14:26:55	0.059	0.063
4-Nov-2015	14:30:55	0.065	0.061
4-Nov-2015	14:34:55	0.058	0.061
4-Nov-2015	14:38:55	0.059	0.063
4-Nov-2015	14:42:55	0.073	0.068
4-Nov-2015	14:46:55	0.071	0.069
4-Nov-2015	14:50:55	0.063	0.065
4-Nov-2015	14:54:55	0.061	0.061
4-Nov-2015	14:58:55	0.058	0.062
4-Nov-2015	15:02:55	0.067	0.071
4-Nov-2015	15:06:55	0.089	0.080
4-Nov-2015	15:10:55	0.085	0.079
4-Nov-2015	15:14:55	0.062	0.072
4-Nov-2015	15:18:55	0.069	0.073
4-Nov-2015	15:22:55	0.088	0.074
4-Nov-2015	15:26:55	0.065	0.071
4-Nov-2015	15:30:55	0.059	0.066
4-Nov-2015	15:34:55	0.075	0.091
4-Nov-2015	15:38:55	0.139	0.093
4-Nov-2015	15:42:55	0.066	0.093
4-Nov-2015	15:46:55	0.073	0.073
4-Nov-2015	15:50:55	0.080	0.072
4-Nov-2015	15:54:55	0.064	0.069
4-Nov-2015	15:58:55	0.062	0.063
4-Nov-2015	16:02:55	0.062	0.065
4-Nov-2015	16:06:55	0.070	0.069
4-Nov-2015	16:10:55	0.075	0.079
4-Nov-2015	16:14:55	0.093	0.083
4-Nov-2015	16:18:55	0.080	0.080
4-Nov-2015	16:22:55	0.066	0.075
4-Nov-2015	16:26:55	0.078	0.070
4-Nov-2015	16:30:55	0.065	0.069
4-Nov-2015	16:34:55	0.065	0.066
4-Nov-2015	16:38:55	0.069	0.079
4-Nov-2015	16:42:55	0.103	0.081
4-Nov-2015	16:46:55	0.072	0.090
4-Nov-2015	16:50:55	0.096	0.083
4-Nov-2015	16:54:55	0.080	0.081
4-Nov-2015	16:58:55	0.068	0.072

DUST MONITORING

November 2015

shading indicates values over the threshold

Monitor: 2

Threshold: 0.15 (mg/m^3)

Date	Time	Value (mg/m^3)	TWA (mg/m^3)
4-Nov-2015	17:02:55	0.069	0.068
4-Nov-2015	17:06:55	0.067	0.076
4-Nov-2015	17:10:55	0.091	0.078
4-Nov-2015	17:14:55	0.076	0.083
4-Nov-2015	17:18:55	0.083	0.077
4-Nov-2015	17:22:55	0.072	0.075
4-Nov-2015	17:26:55	0.069	0.070
4-Nov-2015	17:30:55	0.069	0.069
4-Nov-2015	17:34:55	0.068	0.069
4-Nov-2015	17:38:55	0.070	0.069
4-Nov-2015	17:42:55	0.069	0.070
5-Nov-2015	07:59:11	0.072	0.073
5-Nov-2015	08:03:11	0.073	0.073
5-Nov-2015	08:07:11	0.074	0.074
5-Nov-2015	08:11:11	0.076	0.075
5-Nov-2015	08:15:11	0.075	0.078
5-Nov-2015	08:19:11	0.084	0.079
5-Nov-2015	08:23:11	0.079	0.079
5-Nov-2015	08:27:11	0.074	0.076
5-Nov-2015	08:31:11	0.075	0.075
5-Nov-2015	08:35:11	0.077	0.077
5-Nov-2015	08:39:11	0.079	0.077
5-Nov-2015	08:43:11	0.076	0.076
5-Nov-2015	08:47:11	0.073	0.074
5-Nov-2015	08:51:11	0.072	0.072
5-Nov-2015	08:55:11	0.072	0.071
5-Nov-2015	08:59:11	0.070	0.071
5-Nov-2015	09:03:11	0.071	0.070
5-Nov-2015	09:07:11	0.070	0.071
5-Nov-2015	09:11:11	0.071	0.073
5-Nov-2015	09:15:11	0.078	0.074
5-Nov-2015	09:19:11	0.073	0.075
5-Nov-2015	09:23:11	0.075	0.074
5-Nov-2015	09:27:11	0.075	0.075
5-Nov-2015	09:31:11	0.074	0.079
5-Nov-2015	09:35:11	0.088	0.079
5-Nov-2015	09:39:11	0.074	0.078
5-Nov-2015	09:43:11	0.073	0.074
5-Nov-2015	09:47:11	0.075	0.073
5-Nov-2015	09:51:11	0.072	0.073
5-Nov-2015	09:55:11	0.072	0.071

DUST MONITORING

November 2015

shading indicates values over the threshold

Monitor: 2

Threshold: 0.15 (mg/m^3)

Date	Time	Value (mg/m^3)	TWA (mg/m^3)
5-Nov-2015	09:59:11	0.068	0.070
5-Nov-2015	10:03:11	0.070	0.069
5-Nov-2015	10:07:11	0.069	0.070
5-Nov-2015	10:11:11	0.071	0.070
5-Nov-2015	10:15:11	0.070	0.069
5-Nov-2015	10:19:11	0.065	0.068
5-Nov-2015	10:23:11	0.068	0.066
5-Nov-2015	10:27:11	0.065	0.066
5-Nov-2015	10:31:11	0.064	0.064
5-Nov-2015	10:35:11	0.064	0.064
5-Nov-2015	10:39:11	0.064	0.064
5-Nov-2015	10:43:11	0.065	0.064
5-Nov-2015	10:47:11	0.062	0.063
5-Nov-2015	10:51:11	0.063	0.063
5-Nov-2015	10:55:11	0.064	0.064
5-Nov-2015	10:59:11	0.064	0.065
5-Nov-2015	11:03:11	0.067	0.065
5-Nov-2015	11:07:11	0.063	0.068
5-Nov-2015	11:11:11	0.073	0.068
13-Nov-2015	10:17:01	0.059	0.058
13-Nov-2015	10:21:01	0.057	0.059
13-Nov-2015	10:25:01	0.060	0.058
13-Nov-2015	10:29:01	0.056	0.060
13-Nov-2015	10:33:01	0.063	0.069
13-Nov-2015	10:37:01	0.087	0.070
13-Nov-2015	10:41:01	0.060	0.070
13-Nov-2015	10:45:01	0.064	0.062
16-Nov-2015	08:42:55	0.067	0.061
16-Nov-2015	08:46:55	0.055	0.059
16-Nov-2015	08:50:55	0.054	0.055
16-Nov-2015	08:54:55	0.055	0.053
16-Nov-2015	08:58:55	0.051	0.053
16-Nov-2015	09:02:55	0.052	0.053
16-Nov-2015	09:06:55	0.055	0.053
16-Nov-2015	09:10:55	0.052	0.053
16-Nov-2015	09:14:55	0.052	0.052
16-Nov-2015	09:18:55	0.052	0.054
16-Nov-2015	09:22:55	0.058	0.054
16-Nov-2015	09:26:55	0.053	0.056
16-Nov-2015	09:30:55	0.056	0.055
16-Nov-2015	09:34:55	0.057	0.055

DUST MONITORING

November 2015

shading indicates values over the threshold

Monitor: 2

Threshold: 0.15 (mg/m^3)

Date	Time	Value (mg/m^3)	TWA (mg/m^3)
16-Nov-2015	09:38:55	0.053	0.056
16-Nov-2015	09:42:55	0.057	0.055
16-Nov-2015	09:46:55	0.054	0.055
16-Nov-2015	09:50:55	0.054	0.054
16-Nov-2015	09:54:55	0.054	0.056
16-Nov-2015	09:58:55	0.059	0.057
16-Nov-2015	10:02:55	0.058	0.057
16-Nov-2015	10:06:55	0.054	0.055
16-Nov-2015	10:10:55	0.053	0.054
16-Nov-2015	10:14:55	0.055	0.056
16-Nov-2015	10:18:55	0.059	0.060
16-Nov-2015	10:22:55	0.066	0.063
16-Nov-2015	10:26:55	0.064	0.073
16-Nov-2015	10:30:55	0.088	0.070
16-Nov-2015	10:34:55	0.057	0.068
16-Nov-2015	10:38:55	0.058	0.057
16-Nov-2015	10:42:55	0.056	0.057
16-Nov-2015	10:46:55	0.057	0.058
16-Nov-2015	10:50:55	0.062	0.060
16-Nov-2015	10:54:55	0.062	0.060
16-Nov-2015	10:58:55	0.057	0.076
16-Nov-2015	11:02:55	0.109	0.077
16-Nov-2015	11:06:55	0.065	0.078
16-Nov-2015	11:10:55	0.060	0.072
16-Nov-2015	11:14:55	0.091	0.070
16-Nov-2015	11:18:55	0.060	0.072
16-Nov-2015	11:22:55	0.064	0.062
16-Nov-2015	11:26:55	0.062	0.062
16-Nov-2015	11:30:55	0.059	0.061
16-Nov-2015	11:34:55	0.061	0.060
16-Nov-2015	11:38:55	0.060	0.060
16-Nov-2015	11:42:55	0.058	0.059
16-Nov-2015	11:46:55	0.058	0.058
23-Nov-2015	11:08:55	0.001	0.001
23-Nov-2015	11:12:55	0.000	0.000
23-Nov-2015	11:16:55	0.000	0.000
23-Nov-2015	11:20:55	0.000	0.000
23-Nov-2015	11:24:55	0.000	0.000
23-Nov-2015	11:28:55	0.000	0.000
23-Nov-2015	11:32:55	0.000	0.002
23-Nov-2015	11:36:55	0.006	0.002

DUST MONITORING

November 2015

shading indicates values over the threshold

Monitor: 2

Threshold: 0.15 (mg/m^3)

Date	Time	Value (mg/m^3)	TWA (mg/m^3)
23-Nov-2015	11:40:55	0.000	0.002
23-Nov-2015	11:44:55	0.000	0.006
23-Nov-2015	11:48:55	0.018	0.006
23-Nov-2015	11:52:55	0.000	0.006
23-Nov-2015	11:56:55	0.000	0.000
23-Nov-2015	12:00:55	0.000	0.000
23-Nov-2015	12:04:55	0.000	0.000
23-Nov-2015	12:08:55	0.000	0.000
23-Nov-2015	12:12:55	0.000	0.000
23-Nov-2015	12:16:55	0.000	0.000
23-Nov-2015	12:20:55	0.000	0.000
23-Nov-2015	12:24:55	0.000	0.000
23-Nov-2015	12:28:55	0.000	0.000
23-Nov-2015	12:32:55	0.000	0.000
23-Nov-2015	12:36:55	0.000	0.000
23-Nov-2015	12:40:55	0.000	0.000
23-Nov-2015	12:44:55	0.000	0.000
23-Nov-2015	12:48:55	0.000	0.001
23-Nov-2015	12:52:55	0.002	0.001
23-Nov-2015	12:56:55	0.000	0.001
23-Nov-2015	13:00:55	0.000	0.000
23-Nov-2015	13:04:55	0.000	0.000
23-Nov-2015	13:08:55	0.000	0.000
23-Nov-2015	13:12:55	0.000	0.000
23-Nov-2015	13:16:55	0.000	0.000
23-Nov-2015	13:20:55	0.000	0.000
23-Nov-2015	13:24:55	0.000	0.000
23-Nov-2015	13:28:55	0.000	0.000
23-Nov-2015	13:32:55	0.000	0.000
23-Nov-2015	13:36:55	0.000	0.000
23-Nov-2015	13:40:55	0.000	0.000
23-Nov-2015	13:44:55	0.000	0.000
23-Nov-2015	13:48:55	0.000	0.000
23-Nov-2015	13:52:55	0.000	0.000
23-Nov-2015	13:56:55	0.000	0.000
23-Nov-2015	14:00:55	0.000	0.000
23-Nov-2015	14:04:55	0.000	0.000
23-Nov-2015	14:08:55	0.000	0.000
23-Nov-2015	14:12:55	0.000	0.000
23-Nov-2015	14:16:55	0.000	0.000
23-Nov-2015	14:20:55	0.000	0.000

DUST MONITORING

November 2015

shading indicates values over the threshold

Monitor: 2

Threshold: 0.15 (mg/m^3)

Date	Time	Value (mg/m^3)	TWA (mg/m^3)
23-Nov-2015	14:24:55	0.000	0.000
23-Nov-2015	14:28:55	0.000	0.000
23-Nov-2015	14:32:55	0.000	0.000
23-Nov-2015	14:36:55	0.000	0.000
23-Nov-2015	14:40:55	0.000	0.003
23-Nov-2015	14:44:55	0.009	0.006
23-Nov-2015	14:48:55	0.009	0.006
23-Nov-2015	14:52:55	0.000	0.003
23-Nov-2015	14:56:55	0.000	0.000
23-Nov-2015	15:00:55	0.000	0.000
23-Nov-2015	15:04:55	0.000	0.000
23-Nov-2015	15:08:55	0.000	0.000
23-Nov-2015	15:12:55	0.000	0.000
23-Nov-2015	15:16:55	0.000	0.000
23-Nov-2015	15:20:55	0.000	0.000
23-Nov-2015	15:24:55	0.000	0.000
23-Nov-2015	15:28:55	0.000	0.000
23-Nov-2015	15:32:55	0.000	0.000
23-Nov-2015	15:36:55	0.000	0.000
23-Nov-2015	15:40:55	0.000	0.000
23-Nov-2015	15:44:55	0.000	0.000
23-Nov-2015	15:48:55	0.000	0.000
23-Nov-2015	15:52:55	0.000	0.000
23-Nov-2015	15:56:55	0.000	0.000
23-Nov-2015	16:00:55	0.000	0.000
23-Nov-2015	16:04:55	0.000	0.000
23-Nov-2015	16:08:55	0.000	0.000
23-Nov-2015	16:12:55	0.000	0.000
24-Nov-2015	09:25:42	0.010	0.009
24-Nov-2015	09:29:42	0.007	0.009
24-Nov-2015	09:33:42	0.011	0.009
24-Nov-2015	09:37:42	0.010	0.010
24-Nov-2015	09:41:42	0.009	0.010
24-Nov-2015	09:45:42	0.010	0.010
24-Nov-2015	09:49:42	0.010	0.011
24-Nov-2015	09:53:42	0.014	0.015
24-Nov-2015	09:57:42	0.021	0.020
24-Nov-2015	10:01:42	0.025	0.021
24-Nov-2015	10:05:42	0.018	0.018
24-Nov-2015	10:09:42	0.010	0.013
24-Nov-2015	10:13:42	0.011	0.011

DUST MONITORING

November 2015

shading indicates values over the threshold

Monitor: 2

Threshold: 0.15 (mg/m^3)

Date	Time	Value (mg/m^3)	TWA (mg/m^3)
24-Nov-2015	10:17:42	0.011	0.010
24-Nov-2015	10:21:42	0.009	0.011
24-Nov-2015	10:25:42	0.012	0.010
24-Nov-2015	10:29:42	0.009	0.010
24-Nov-2015	10:33:42	0.010	0.010
24-Nov-2015	10:37:42	0.012	0.013
24-Nov-2015	10:41:42	0.017	0.013
24-Nov-2015	10:45:42	0.010	0.013
24-Nov-2015	10:49:42	0.011	0.010
24-Nov-2015	10:53:42	0.009	0.008
24-Nov-2015	10:57:42	0.004	0.005
24-Nov-2015	11:01:42	0.003	0.003
24-Nov-2015	11:05:42	0.001	0.003
24-Nov-2015	11:09:42	0.004	0.003
24-Nov-2015	11:13:42	0.005	0.004
24-Nov-2015	11:17:42	0.003	0.004
24-Nov-2015	11:21:42	0.004	0.004
24-Nov-2015	11:25:42	0.006	0.007
24-Nov-2015	11:29:42	0.012	0.006
24-Nov-2015	11:33:42	0.000	0.004
24-Nov-2015	11:37:42	0.000	0.000
24-Nov-2015	11:41:42	0.001	0.001
24-Nov-2015	11:45:42	0.001	0.001
24-Nov-2015	11:49:42	0.001	0.001
24-Nov-2015	11:53:42	0.001	0.001
24-Nov-2015	11:57:42	0.001	0.001
24-Nov-2015	12:01:42	0.000	0.000
24-Nov-2015	12:05:42	0.000	0.001
24-Nov-2015	12:09:42	0.003	0.002
24-Nov-2015	12:13:42	0.002	0.002
24-Nov-2015	12:17:42	0.000	0.001
24-Nov-2015	12:21:42	0.000	0.000
24-Nov-2015	12:25:42	0.000	0.000
24-Nov-2015	12:29:42	0.001	0.000
24-Nov-2015	12:33:42	0.000	0.001
24-Nov-2015	12:37:42	0.002	0.001
24-Nov-2015	12:41:42	0.002	0.002
24-Nov-2015	12:45:42	0.001	0.001
24-Nov-2015	12:49:42	0.001	0.001
24-Nov-2015	12:53:42	0.000	0.000
24-Nov-2015	12:57:42	0.000	0.000

DUST MONITORING

November 2015

shading indicates values over the threshold

Monitor: 2

Threshold: 0.15 (mg/m^3)

Date	Time	Value (mg/m^3)	TWA (mg/m^3)
24-Nov-2015	13:01:42	0.000	0.000
24-Nov-2015	13:05:42	0.000	0.000
24-Nov-2015	13:09:42	0.000	0.000
24-Nov-2015	13:13:42	0.001	0.001
24-Nov-2015	13:17:42	0.002	0.001
24-Nov-2015	13:21:42	0.000	0.001
24-Nov-2015	13:25:42	0.001	0.001
24-Nov-2015	13:29:42	0.001	0.001
24-Nov-2015	13:33:42	0.000	0.000
24-Nov-2015	13:37:42	0.000	0.000
24-Nov-2015	13:41:42	0.001	0.000
24-Nov-2015	13:45:42	0.000	0.001
24-Nov-2015	13:49:42	0.001	0.000
24-Nov-2015	13:53:42	0.000	0.001
24-Nov-2015	13:57:42	0.002	0.001
24-Nov-2015	14:01:42	0.002	0.002
24-Nov-2015	14:05:42	0.001	0.001
24-Nov-2015	14:09:42	0.001	0.001
24-Nov-2015	14:13:42	0.000	0.001
24-Nov-2015	14:17:42	0.002	0.002
24-Nov-2015	14:21:42	0.003	0.002
24-Nov-2015	14:25:42	0.001	0.003
24-Nov-2015	14:29:42	0.004	0.002
24-Nov-2015	14:33:42	0.001	0.002
24-Nov-2015	14:37:42	0.000	0.002
24-Nov-2015	14:41:42	0.004	0.001
24-Nov-2015	14:45:42	0.000	0.002
24-Nov-2015	14:49:42	0.001	0.001
24-Nov-2015	14:53:42	0.003	0.002
24-Nov-2015	14:57:42	0.001	0.002
24-Nov-2015	15:01:42	0.001	0.001
24-Nov-2015	15:05:42	0.001	0.001
24-Nov-2015	15:09:42	0.001	0.002
24-Nov-2015	15:13:42	0.003	0.002
24-Nov-2015	15:17:42	0.001	0.002
24-Nov-2015	15:21:42	0.001	0.002
24-Nov-2015	15:25:42	0.005	0.003
24-Nov-2015	15:29:42	0.003	0.005
24-Nov-2015	15:33:42	0.008	0.006
24-Nov-2015	15:37:42	0.008	0.006
24-Nov-2015	15:41:42	0.002	0.006

DUST MONITORING

November 2015

shading indicates values over the threshold

Monitor: **2**

Threshold: **0.15 (mg/m^3)**

Date	Time	Value (mg/m^3)	TWA (mg/m^3)
24-Nov-2015	15:45:42	0.008	0.006
24-Nov-2015	15:49:42	0.007	0.006
24-Nov-2015	15:53:42	0.002	0.004
24-Nov-2015	15:57:42	0.003	0.005
24-Nov-2015	16:01:42	0.009	0.005
24-Nov-2015	16:05:42	0.003	0.007
24-Nov-2015	16:09:42	0.009	0.009
24-Nov-2015	16:13:42	0.015	0.009
24-Nov-2015	16:17:42	0.004	0.008
24-Nov-2015	16:21:42	0.005	0.005
24-Nov-2015	16:25:42	0.006	0.008
24-Nov-2015	16:29:42	0.013	0.010
24-Nov-2015	16:33:42	0.011	0.015
24-Nov-2015	16:37:42	0.022	0.017

DUST MONITORING

November 2015

shading indicates values over the threshold

Monitor: 3

Threshold: 0.15 (mg/m^3)

Date	Time	Value (mg/m^3)	TWA (mg/m^3)
4-Nov-2015	14:22:09	0.010	0.010
4-Nov-2015	14:26:09	0.010	0.010
4-Nov-2015	14:30:09	0.011	0.011
4-Nov-2015	14:34:09	0.011	0.011
4-Nov-2015	14:38:09	0.011	0.011
4-Nov-2015	14:42:09	0.011	0.011
4-Nov-2015	14:46:09	0.011	0.011
4-Nov-2015	14:50:09	0.012	0.011
4-Nov-2015	14:54:09	0.010	0.011
4-Nov-2015	14:58:09	0.010	0.010
4-Nov-2015	15:02:09	0.010	0.010
4-Nov-2015	15:06:09	0.010	0.010
4-Nov-2015	15:10:09	0.009	0.009
4-Nov-2015	15:14:09	0.009	0.009
4-Nov-2015	15:18:09	0.009	0.009
4-Nov-2015	15:22:09	0.010	0.009
4-Nov-2015	15:26:09	0.009	0.010
4-Nov-2015	15:30:09	0.010	0.010
4-Nov-2015	15:34:09	0.010	0.010
4-Nov-2015	15:38:09	0.011	0.011
4-Nov-2015	15:42:09	0.011	0.011
4-Nov-2015	15:46:09	0.011	0.011
4-Nov-2015	15:50:09	0.012	0.011
4-Nov-2015	15:54:09	0.010	0.011
4-Nov-2015	15:58:09	0.011	0.011
4-Nov-2015	16:02:09	0.011	0.011
4-Nov-2015	16:06:09	0.011	0.011
4-Nov-2015	16:10:09	0.012	0.011
4-Nov-2015	16:14:09	0.011	0.011
4-Nov-2015	16:18:09	0.011	0.011
4-Nov-2015	16:22:09	0.011	0.011
4-Nov-2015	16:26:09	0.011	0.011
4-Nov-2015	16:30:09	0.012	0.012
4-Nov-2015	16:34:09	0.012	0.012
4-Nov-2015	16:38:09	0.012	0.012
4-Nov-2015	16:42:09	0.012	0.012
4-Nov-2015	16:46:09	0.012	0.012
4-Nov-2015	16:50:09	0.013	0.013
4-Nov-2015	16:54:09	0.013	0.013
4-Nov-2015	16:58:09	0.013	0.013
4-Nov-2015	17:02:09	0.013	0.013

DUST MONITORING

November 2015

shading indicates values over the threshold

Monitor: 3

Threshold: 0.15 (mg/m^3)

Date	Time	Value (mg/m^3)	TWA (mg/m^3)
4-Nov-2015	17:06:09	0.014	0.013
4-Nov-2015	17:10:09	0.013	0.013
4-Nov-2015	17:14:09	0.013	0.013
4-Nov-2015	17:18:09	0.012	0.013
5-Nov-2015	08:02:40	0.023	0.025
5-Nov-2015	08:06:40	0.026	0.025
5-Nov-2015	08:10:40	0.027	0.027
5-Nov-2015	08:14:40	0.028	0.028
5-Nov-2015	08:18:40	0.029	0.029
5-Nov-2015	08:22:40	0.029	0.029
5-Nov-2015	08:26:40	0.028	0.028
5-Nov-2015	08:30:40	0.027	0.028
5-Nov-2015	08:34:40	0.028	0.028
5-Nov-2015	08:38:40	0.028	0.028
5-Nov-2015	08:42:40	0.027	0.027
5-Nov-2015	08:46:40	0.025	0.025
5-Nov-2015	08:50:40	0.023	0.023
5-Nov-2015	08:54:40	0.021	0.022
5-Nov-2015	08:58:40	0.022	0.021
5-Nov-2015	09:02:40	0.021	0.021
5-Nov-2015	09:06:40	0.021	0.021
5-Nov-2015	09:10:40	0.022	0.022
5-Nov-2015	09:14:40	0.022	0.022
5-Nov-2015	09:18:40	0.021	0.021
5-Nov-2015	09:22:40	0.021	0.021
5-Nov-2015	09:26:40	0.021	0.022
5-Nov-2015	09:30:40	0.023	0.022
5-Nov-2015	09:34:40	0.022	0.023
5-Nov-2015	09:38:40	0.023	0.022
5-Nov-2015	09:42:40	0.021	0.021
5-Nov-2015	09:46:40	0.020	0.020
5-Nov-2015	09:50:40	0.019	0.019
5-Nov-2015	09:54:40	0.019	0.018
5-Nov-2015	09:58:40	0.017	0.017
5-Nov-2015	10:02:40	0.016	0.015
5-Nov-2015	10:06:40	0.013	0.014
5-Nov-2015	10:10:40	0.014	0.013
5-Nov-2015	10:14:40	0.013	0.013
5-Nov-2015	10:18:40	0.012	0.012
5-Nov-2015	10:22:40	0.011	0.012
16-Nov-2015	08:41:50	0.014	0.010

DUST MONITORING

November 2015

shading indicates values over the threshold

Monitor: 3

Threshold: 0.15 (mg/m^3)

Date	Time	Value (mg/m^3)	TWA (mg/m^3)
16-Nov-2015	08:45:50	0.006	0.009
16-Nov-2015	08:49:50	0.007	0.007
16-Nov-2015	08:53:50	0.007	0.006
16-Nov-2015	08:57:50	0.004	0.006
16-Nov-2015	09:01:50	0.006	0.006
16-Nov-2015	09:05:50	0.007	0.007
16-Nov-2015	09:09:50	0.007	0.006
16-Nov-2015	09:13:50	0.004	0.006
16-Nov-2015	09:17:50	0.006	0.006
16-Nov-2015	09:21:50	0.008	0.008
16-Nov-2015	09:25:50	0.009	0.008
16-Nov-2015	09:29:50	0.008	0.009
16-Nov-2015	09:33:50	0.010	0.008
16-Nov-2015	09:37:50	0.007	0.008
16-Nov-2015	09:41:50	0.008	0.008
16-Nov-2015	09:45:50	0.008	0.008
16-Nov-2015	09:49:50	0.007	0.007
16-Nov-2015	09:53:50	0.007	0.008
16-Nov-2015	09:57:50	0.011	0.010
16-Nov-2015	10:01:50	0.011	0.010
16-Nov-2015	10:05:50	0.007	0.008
16-Nov-2015	10:09:50	0.006	0.006
16-Nov-2015	10:13:50	0.006	0.008
16-Nov-2015	10:17:50	0.011	0.011
16-Nov-2015	10:21:50	0.015	0.013
16-Nov-2015	10:25:50	0.013	0.025
16-Nov-2015	10:29:50	0.046	0.022
16-Nov-2015	10:33:50	0.008	0.022
16-Nov-2015	10:37:50	0.012	0.009
16-Nov-2015	10:41:50	0.006	0.008
16-Nov-2015	10:45:50	0.007	0.008
16-Nov-2015	10:49:50	0.012	0.011
16-Nov-2015	10:53:50	0.014	0.011
16-Nov-2015	10:57:50	0.007	0.025
16-Nov-2015	11:01:50	0.055	0.025
16-Nov-2015	11:05:50	0.014	0.027
16-Nov-2015	11:09:50	0.012	0.021
16-Nov-2015	11:13:50	0.038	0.020
16-Nov-2015	11:17:50	0.009	0.021
16-Nov-2015	11:21:50	0.015	0.012
16-Nov-2015	11:25:50	0.011	0.012

DUST MONITORING

November 2015

shading indicates values over the threshold

Monitor: 3

Threshold: 0.15 (mg/m^3)

Date	Time	Value (mg/m^3)	TWA (mg/m^3)
16-Nov-2015	11:29:50	0.009	0.010
16-Nov-2015	11:33:50	0.010	0.009
16-Nov-2015	11:37:50	0.009	0.009
16-Nov-2015	11:41:50	0.008	0.008
16-Nov-2015	11:45:50	0.008	0.008
17-Nov-2015	08:51:20	0.011	0.011
17-Nov-2015	08:55:20	0.011	0.011
17-Nov-2015	08:59:20	0.011	0.011
17-Nov-2015	09:03:20	0.012	0.012
17-Nov-2015	09:07:20	0.012	0.012
17-Nov-2015	09:11:20	0.013	0.012
17-Nov-2015	09:15:20	0.012	0.012
17-Nov-2015	09:19:20	0.011	0.011
17-Nov-2015	09:23:20	0.010	0.013
17-Nov-2015	09:27:20	0.017	0.013
17-Nov-2015	09:31:20	0.013	0.014
17-Nov-2015	09:35:20	0.011	0.012
17-Nov-2015	09:39:20	0.012	0.012
17-Nov-2015	09:43:20	0.012	0.012
17-Nov-2015	09:47:20	0.011	0.015
17-Nov-2015	09:51:20	0.021	0.015
17-Nov-2015	09:55:20	0.012	0.015
17-Nov-2015	09:59:20	0.012	0.012
17-Nov-2015	10:03:20	0.013	0.012
17-Nov-2015	10:07:20	0.011	0.012
17-Nov-2015	10:11:20	0.011	0.012
17-Nov-2015	10:15:20	0.013	0.019
17-Nov-2015	10:19:20	0.034	0.020
17-Nov-2015	10:23:20	0.012	0.019
17-Nov-2015	10:27:20	0.011	0.011
17-Nov-2015	10:31:20	0.010	0.011
17-Nov-2015	10:35:20	0.011	0.010
17-Nov-2015	10:39:20	0.010	0.010
17-Nov-2015	10:43:20	0.010	0.010
17-Nov-2015	10:47:20	0.011	0.011
17-Nov-2015	10:51:20	0.011	0.010
17-Nov-2015	10:55:20	0.009	0.015
17-Nov-2015	10:59:20	0.026	0.015
17-Nov-2015	11:03:20	0.009	0.015
17-Nov-2015	11:07:20	0.009	0.009
17-Nov-2015	11:11:20	0.009	0.009

DUST MONITORING

November 2015

shading indicates values over the threshold

Monitor: 3

Threshold: 0.15 (mg/m^3)

Date	Time	Value (mg/m^3)	TWA (mg/m^3)
17-Nov-2015	11:15:20	0.010	0.010
17-Nov-2015	11:19:20	0.010	0.010
17-Nov-2015	11:23:20	0.009	0.010
17-Nov-2015	11:27:20	0.011	0.010
17-Nov-2015	11:31:20	0.009	0.012
17-Nov-2015	11:35:20	0.017	0.011
17-Nov-2015	11:39:20	0.008	0.011
17-Nov-2015	11:43:20	0.009	0.009
17-Nov-2015	11:47:20	0.010	0.010
17-Nov-2015	11:51:20	0.010	0.010
17-Nov-2015	11:55:20	0.011	0.011
17-Nov-2015	11:59:20	0.013	0.015
17-Nov-2015	12:03:20	0.021	0.015
17-Nov-2015	12:07:20	0.010	0.023
17-Nov-2015	12:11:20	0.038	0.021
17-Nov-2015	12:15:20	0.016	0.022
17-Nov-2015	12:19:20	0.011	0.016
17-Nov-2015	12:23:20	0.022	0.016
17-Nov-2015	12:27:20	0.016	0.016
17-Nov-2015	12:31:20	0.010	0.012
17-Nov-2015	12:35:20	0.010	0.011
17-Nov-2015	12:39:20	0.014	0.012
17-Nov-2015	12:43:20	0.012	0.014
17-Nov-2015	12:47:20	0.017	0.013
17-Nov-2015	12:51:20	0.011	0.013
17-Nov-2015	12:55:20	0.011	0.017
17-Nov-2015	12:59:20	0.030	0.018
17-Nov-2015	13:03:20	0.012	0.018
17-Nov-2015	13:07:20	0.011	0.011
17-Nov-2015	13:11:20	0.011	0.011
17-Nov-2015	13:15:20	0.012	0.011
17-Nov-2015	13:19:20	0.011	0.019
17-Nov-2015	13:23:20	0.035	0.022
17-Nov-2015	13:27:20	0.019	0.033
17-Nov-2015	13:31:20	0.045	0.031
17-Nov-2015	13:35:20	0.028	0.033
17-Nov-2015	13:39:20	0.027	0.024
17-Nov-2015	13:43:20	0.018	0.020
17-Nov-2015	13:47:20	0.015	0.016
17-Nov-2015	13:51:20	0.016	0.014
17-Nov-2015	13:55:20	0.012	0.013

DUST MONITORING

November 2015

shading indicates values over the threshold

Monitor: 3

Threshold: 0.15 (mg/m^3)

Date	Time	Value (mg/m^3)	TWA (mg/m^3)
17-Nov-2015	13:59:20	0.012	0.013
17-Nov-2015	14:03:20	0.016	0.014
17-Nov-2015	14:07:20	0.013	0.014
17-Nov-2015	14:11:20	0.013	0.014
17-Nov-2015	14:15:20	0.017	0.014
17-Nov-2015	14:19:20	0.013	0.015
17-Nov-2015	14:23:20	0.014	0.013
17-Nov-2015	14:27:20	0.011	0.012
17-Nov-2015	14:31:20	0.011	0.020
17-Nov-2015	14:35:20	0.037	0.020
17-Nov-2015	14:39:20	0.012	0.027
17-Nov-2015	14:43:20	0.032	0.022
17-Nov-2015	14:47:20	0.022	0.022
17-Nov-2015	14:51:20	0.013	0.016
17-Nov-2015	14:55:20	0.013	0.013
17-Nov-2015	14:59:20	0.013	0.027
17-Nov-2015	15:03:20	0.056	0.027
17-Nov-2015	15:07:20	0.013	0.035
17-Nov-2015	15:11:20	0.036	0.023
17-Nov-2015	15:15:20	0.021	0.023
17-Nov-2015	15:19:20	0.013	0.016
17-Nov-2015	15:23:20	0.013	0.013
17-Nov-2015	15:27:20	0.012	0.012
17-Nov-2015	15:31:20	0.012	0.012
17-Nov-2015	15:35:20	0.013	0.018
17-Nov-2015	15:39:20	0.030	0.035
17-Nov-2015	15:43:20	0.061	0.036
17-Nov-2015	15:47:20	0.018	0.031
17-Nov-2015	15:51:20	0.014	0.017
17-Nov-2015	15:55:20	0.019	0.017
17-Nov-2015	15:59:20	0.018	0.018
17-Nov-2015	16:03:20	0.017	0.017
17-Nov-2015	16:07:20	0.015	0.015
17-Nov-2015	16:11:20	0.014	0.014
17-Nov-2015	16:15:20	0.014	0.014
17-Nov-2015	16:19:20	0.014	0.017
17-Nov-2015	16:23:20	0.024	0.019
17-Nov-2015	16:27:20	0.020	0.019
17-Nov-2015	16:31:20	0.014	0.017
23-Nov-2015	11:13:58	0.003	0.003
23-Nov-2015	11:17:58	0.002	0.003

DUST MONITORING

November 2015

shading indicates values over the threshold

Monitor: 3

Threshold: 0.15 (mg/m^3)

Date	Time	Value (mg/m^3)	TWA (mg/m^3)
23-Nov-2015	11:21:58	0.004	0.003
23-Nov-2015	11:25:58	0.003	0.003
23-Nov-2015	11:29:58	0.002	0.002
23-Nov-2015	11:33:58	0.001	0.001
23-Nov-2015	11:37:58	0.001	0.001
23-Nov-2015	11:41:58	0.001	0.001
23-Nov-2015	11:45:58	0.000	0.000
23-Nov-2015	11:49:58	0.000	0.000
23-Nov-2015	11:53:58	0.001	0.000
23-Nov-2015	11:57:58	0.000	0.000
23-Nov-2015	12:01:58	0.000	0.000
23-Nov-2015	12:05:58	0.000	0.000
23-Nov-2015	12:09:58	0.000	0.000
23-Nov-2015	12:13:58	0.000	0.000
23-Nov-2015	12:17:58	0.000	0.000
23-Nov-2015	12:21:58	0.000	0.000
23-Nov-2015	12:25:58	0.000	0.000
23-Nov-2015	12:29:58	0.001	0.000
23-Nov-2015	12:33:58	0.000	0.000
23-Nov-2015	12:37:58	0.000	0.000
23-Nov-2015	12:41:58	0.000	0.000
23-Nov-2015	12:45:58	0.000	0.000
23-Nov-2015	12:49:58	0.000	0.000
23-Nov-2015	12:53:58	0.000	0.000
23-Nov-2015	12:57:58	0.001	0.000
23-Nov-2015	13:01:58	0.000	0.000
23-Nov-2015	13:05:58	0.000	0.000
23-Nov-2015	13:09:58	0.001	0.001
23-Nov-2015	13:13:58	0.001	0.001
23-Nov-2015	13:17:58	0.001	0.001
23-Nov-2015	13:21:58	0.001	0.001
23-Nov-2015	13:25:58	0.000	0.002
23-Nov-2015	13:29:58	0.005	0.002
23-Nov-2015	13:33:58	0.001	0.011
23-Nov-2015	13:37:58	0.027	0.010
23-Nov-2015	13:41:58	0.001	0.009
23-Nov-2015	13:45:58	0.000	0.001
23-Nov-2015	13:49:58	0.001	0.000
23-Nov-2015	13:53:58	0.000	0.000
23-Nov-2015	13:57:58	0.000	0.001
23-Nov-2015	14:01:58	0.002	0.001

DUST MONITORING

November 2015

shading indicates values over the threshold

Monitor: 3

Threshold: 0.15 (mg/m^3)

Date	Time	Value (mg/m^3)	TWA (mg/m^3)
23-Nov-2015	14:05:58	0.001	0.001
23-Nov-2015	14:09:58	0.000	0.001
23-Nov-2015	14:13:58	0.001	0.001
23-Nov-2015	14:17:58	0.001	0.001
23-Nov-2015	14:21:58	0.001	0.001
23-Nov-2015	14:25:58	0.002	0.001
23-Nov-2015	14:29:58	0.001	0.001
23-Nov-2015	14:33:58	0.001	0.010
23-Nov-2015	14:37:58	0.029	0.011
23-Nov-2015	14:41:58	0.003	0.017
23-Nov-2015	14:45:58	0.019	0.008
23-Nov-2015	14:49:58	0.001	0.007
23-Nov-2015	14:53:58	0.002	0.001
23-Nov-2015	14:57:58	0.001	0.009
23-Nov-2015	15:01:58	0.024	0.009
23-Nov-2015	15:05:58	0.001	0.009
23-Nov-2015	15:09:58	0.001	0.004
23-Nov-2015	15:13:58	0.011	0.004
23-Nov-2015	15:17:58	0.001	0.005
23-Nov-2015	15:21:58	0.002	0.002
23-Nov-2015	15:25:58	0.002	0.005
23-Nov-2015	15:29:58	0.011	0.005
23-Nov-2015	15:33:58	0.001	0.005
23-Nov-2015	15:37:58	0.002	0.002
23-Nov-2015	15:41:58	0.002	0.003
23-Nov-2015	15:45:58	0.004	0.003
23-Nov-2015	15:49:58	0.002	0.007
23-Nov-2015	15:53:58	0.015	0.006
23-Nov-2015	15:57:58	0.001	0.006
23-Nov-2015	16:01:58	0.001	0.003
23-Nov-2015	16:05:58	0.008	0.003
23-Nov-2015	16:09:58	0.001	0.003
23-Nov-2015	16:13:58	0.001	0.002
23-Nov-2015	16:17:58	0.003	0.002
23-Nov-2015	16:21:58	0.002	0.002
23-Nov-2015	16:25:58	0.002	0.002
24-Nov-2015	09:25:42	0.010	0.009
24-Nov-2015	09:29:42	0.007	0.009
24-Nov-2015	09:33:42	0.011	0.009
24-Nov-2015	09:37:42	0.010	0.010
24-Nov-2015	09:41:42	0.009	0.010

DUST MONITORING

November 2015

shading indicates values over the threshold

Monitor: 3

Threshold: 0.15 (mg/m^3)

Date	Time	Value (mg/m^3)	TWA (mg/m^3)
24-Nov-2015	09:45:42	0.010	0.010
24-Nov-2015	09:49:42	0.010	0.011
24-Nov-2015	09:53:42	0.014	0.015
24-Nov-2015	09:57:42	0.021	0.020
24-Nov-2015	10:01:42	0.025	0.021
24-Nov-2015	10:05:42	0.018	0.018
24-Nov-2015	10:09:42	0.010	0.013
24-Nov-2015	10:13:42	0.011	0.011
24-Nov-2015	10:17:42	0.011	0.010
24-Nov-2015	10:21:42	0.009	0.011
24-Nov-2015	10:25:42	0.012	0.010
24-Nov-2015	10:29:42	0.009	0.010
24-Nov-2015	10:33:42	0.010	0.010
24-Nov-2015	10:37:42	0.012	0.013
24-Nov-2015	10:41:42	0.017	0.013
24-Nov-2015	10:45:42	0.010	0.013
24-Nov-2015	10:49:42	0.011	0.010
24-Nov-2015	10:53:42	0.009	0.008
24-Nov-2015	10:57:42	0.004	0.005
24-Nov-2015	11:01:42	0.003	0.003
24-Nov-2015	11:05:42	0.001	0.003
24-Nov-2015	11:09:42	0.004	0.003
24-Nov-2015	11:13:42	0.005	0.004
24-Nov-2015	11:17:42	0.003	0.004
24-Nov-2015	11:21:42	0.004	0.004
24-Nov-2015	11:25:42	0.006	0.007
24-Nov-2015	11:29:42	0.012	0.006
24-Nov-2015	11:33:42	0.000	0.004
24-Nov-2015	11:37:42	0.000	0.000
24-Nov-2015	11:41:42	0.001	0.001
24-Nov-2015	11:45:42	0.001	0.001
24-Nov-2015	11:49:42	0.001	0.001
24-Nov-2015	11:53:42	0.001	0.001
24-Nov-2015	11:57:42	0.001	0.001
24-Nov-2015	12:01:42	0.000	0.000
24-Nov-2015	12:05:42	0.000	0.001
24-Nov-2015	12:09:42	0.003	0.002
24-Nov-2015	12:13:42	0.002	0.002
24-Nov-2015	12:17:42	0.000	0.001
24-Nov-2015	12:21:42	0.000	0.000
24-Nov-2015	12:25:42	0.000	0.000

DUST MONITORING

November 2015

shading indicates values over the threshold

Monitor: 3

Threshold: 0.15 (mg/m^3)

Date	Time	Value (mg/m^3)	TWA (mg/m^3)
24-Nov-2015	12:29:42	0.001	0.000
24-Nov-2015	12:33:42	0.000	0.001
24-Nov-2015	12:37:42	0.002	0.001
24-Nov-2015	12:41:42	0.002	0.002
24-Nov-2015	12:45:42	0.001	0.001
24-Nov-2015	12:49:42	0.001	0.001
24-Nov-2015	12:53:42	0.000	0.000
24-Nov-2015	12:57:42	0.000	0.000
24-Nov-2015	13:01:42	0.000	0.000
24-Nov-2015	13:05:42	0.000	0.000
24-Nov-2015	13:09:42	0.000	0.000
24-Nov-2015	13:13:42	0.001	0.001
24-Nov-2015	13:17:42	0.002	0.001
24-Nov-2015	13:21:42	0.000	0.001
24-Nov-2015	13:25:42	0.001	0.001
24-Nov-2015	13:29:42	0.001	0.001
24-Nov-2015	13:33:42	0.000	0.000
24-Nov-2015	13:37:42	0.000	0.000
24-Nov-2015	13:41:42	0.001	0.000
24-Nov-2015	13:45:42	0.000	0.001
24-Nov-2015	13:49:42	0.001	0.000
24-Nov-2015	13:53:42	0.000	0.001
24-Nov-2015	13:57:42	0.002	0.001
24-Nov-2015	14:01:42	0.002	0.002
24-Nov-2015	14:05:42	0.001	0.001
24-Nov-2015	14:09:42	0.001	0.001
24-Nov-2015	14:13:42	0.000	0.001
24-Nov-2015	14:17:42	0.002	0.002
24-Nov-2015	14:21:42	0.003	0.002
24-Nov-2015	14:25:42	0.001	0.003
24-Nov-2015	14:29:42	0.004	0.002
24-Nov-2015	14:33:42	0.001	0.002
24-Nov-2015	14:37:42	0.000	0.002
24-Nov-2015	14:41:42	0.004	0.001
24-Nov-2015	14:45:42	0.000	0.002
24-Nov-2015	14:49:42	0.001	0.001
24-Nov-2015	14:53:42	0.003	0.002
24-Nov-2015	14:57:42	0.001	0.002
24-Nov-2015	15:01:42	0.001	0.001
24-Nov-2015	15:05:42	0.001	0.001
24-Nov-2015	15:09:42	0.001	0.002

DUST MONITORING

November 2015

shading indicates values over the threshold

Monitor: 3

Threshold: 0.15 (mg/m^3)

Date	Time	Value (mg/m^3)	TWA (mg/m^3)
24-Nov-2015	15:13:42	0.003	0.002
24-Nov-2015	15:17:42	0.001	0.002
24-Nov-2015	15:21:42	0.001	0.002
24-Nov-2015	15:25:42	0.005	0.003
24-Nov-2015	15:29:42	0.003	0.005
24-Nov-2015	15:33:42	0.008	0.006
24-Nov-2015	15:37:42	0.008	0.006
24-Nov-2015	15:41:42	0.002	0.006
24-Nov-2015	15:45:42	0.008	0.006
24-Nov-2015	15:49:42	0.007	0.006
24-Nov-2015	15:53:42	0.002	0.004
24-Nov-2015	15:57:42	0.003	0.005
24-Nov-2015	16:01:42	0.009	0.005
24-Nov-2015	16:05:42	0.003	0.007
24-Nov-2015	16:09:42	0.009	0.009
24-Nov-2015	16:13:42	0.015	0.009
24-Nov-2015	16:17:42	0.004	0.008
24-Nov-2015	16:21:42	0.005	0.005
24-Nov-2015	16:25:42	0.006	0.008
24-Nov-2015	16:29:42	0.013	0.010
24-Nov-2015	16:33:42	0.011	0.015
24-Nov-2015	16:37:42	0.022	0.017

DUST MONITORING

December 2015

shading indicates values over the threshold

Monitor: 1

Threshold: 0.15 (mg/m^3)

Date	Time	Value (mg/m^3)	TWA (mg/m^3)
4-Dec-2015	09:28:56	0.026	0.026
4-Dec-2015	09:32:56	0.025	0.024
4-Dec-2015	09:36:56	0.022	0.021
4-Dec-2015	09:40:56	0.016	0.022
4-Dec-2015	09:44:56	0.029	0.023
4-Dec-2015	09:48:56	0.024	0.029
4-Dec-2015	09:52:56	0.035	0.026
4-Dec-2015	09:56:56	0.019	0.023
4-Dec-2015	10:00:56	0.015	0.016
4-Dec-2015	10:04:56	0.014	0.014
4-Dec-2015	10:08:56	0.014	0.014
4-Dec-2015	10:12:56	0.015	0.014
4-Dec-2015	10:16:56	0.014	0.014
4-Dec-2015	10:20:56	0.014	0.014
4-Dec-2015	10:24:56	0.013	0.014
4-Dec-2015	10:28:56	0.015	0.013
4-Dec-2015	10:32:56	0.012	0.014
4-Dec-2015	10:36:56	0.015	0.014
4-Dec-2015	10:40:56	0.015	0.014
4-Dec-2015	10:44:56	0.013	0.014
4-Dec-2015	10:48:56	0.013	0.016
4-Dec-2015	10:52:56	0.022	0.021
4-Dec-2015	10:56:56	0.028	0.024
4-Dec-2015	11:00:56	0.023	0.024
4-Dec-2015	11:04:56	0.020	0.019
4-Dec-2015	11:08:56	0.014	0.015
4-Dec-2015	11:12:56	0.012	0.013
4-Dec-2015	11:16:56	0.013	0.013
7-Dec-2015	09:36:47	0.031	0.032
7-Dec-2015	09:40:47	0.032	0.031
7-Dec-2015	09:44:47	0.029	0.028
7-Dec-2015	09:48:47	0.024	0.027
7-Dec-2015	09:52:47	0.027	0.027
7-Dec-2015	09:56:47	0.029	0.028
7-Dec-2015	10:00:47	0.028	0.026
7-Dec-2015	10:04:47	0.021	0.022
7-Dec-2015	10:08:47	0.017	0.031
7-Dec-2015	10:12:47	0.056	0.032
7-Dec-2015	10:16:47	0.022	0.031
7-Dec-2015	10:20:47	0.015	0.019
7-Dec-2015	10:24:47	0.019	0.019

DUST MONITORING

December 2015

shading indicates values over the threshold

Monitor: 1

Threshold: 0.15 (mg/m^3)

Date	Time	Value (mg/m^3)	TWA (mg/m^3)
7-Dec-2015	10:28:47	0.022	0.021
7-Dec-2015	10:32:47	0.023	0.020
7-Dec-2015	10:36:47	0.016	0.017
7-Dec-2015	10:40:47	0.012	0.014
7-Dec-2015	10:44:47	0.013	0.013
7-Dec-2015	10:48:47	0.014	0.013
7-Dec-2015	10:52:47	0.013	0.014
7-Dec-2015	10:56:47	0.015	0.015
7-Dec-2015	11:00:47	0.018	0.015
7-Dec-2015	11:04:47	0.013	0.016
7-Dec-2015	11:08:47	0.016	0.020
7-Dec-2015	11:12:47	0.030	0.023
7-Dec-2015	11:16:47	0.022	0.024
7-Dec-2015	11:20:47	0.021	0.049
7-Dec-2015	11:24:47	0.103	0.050
7-Dec-2015	11:28:47	0.027	0.048
7-Dec-2015	11:32:47	0.014	0.029
7-Dec-2015	11:36:47	0.045	0.025
7-Dec-2015	11:40:47	0.015	0.049
7-Dec-2015	11:44:47	0.088	0.040
7-Dec-2015	11:48:47	0.017	0.039
7-Dec-2015	11:52:47	0.013	0.014
7-Dec-2015	11:56:47	0.013	0.013
7-Dec-2015	12:00:47	0.013	0.013
7-Dec-2015	12:04:47	0.012	0.013
7-Dec-2015	12:08:47	0.014	0.013
7-Dec-2015	12:12:47	0.012	0.013
7-Dec-2015	12:16:47	0.012	0.020
7-Dec-2015	12:20:47	0.036	0.029
7-Dec-2015	12:24:47	0.038	0.029
7-Dec-2015	12:28:47	0.012	0.021
7-Dec-2015	12:32:47	0.012	0.012
7-Dec-2015	12:36:47	0.013	0.016
7-Dec-2015	12:40:47	0.023	0.019
7-Dec-2015	12:44:47	0.021	0.018
7-Dec-2015	12:48:47	0.011	0.014
7-Dec-2015	12:52:47	0.010	0.015
7-Dec-2015	12:56:47	0.023	0.015
7-Dec-2015	13:00:47	0.011	0.020
7-Dec-2015	13:04:47	0.026	0.016
7-Dec-2015	13:08:47	0.010	0.023

DUST MONITORING

December 2015

shading indicates values over the threshold

Monitor: 1

Threshold: 0.15 (mg/m^3)

Date	Time	Value (mg/m^3)	TWA (mg/m^3)
7-Dec-2015	13:12:47	0.032	0.024
7-Dec-2015	13:16:47	0.030	0.031
7-Dec-2015	13:20:47	0.030	0.027
7-Dec-2015	13:24:47	0.020	0.023
7-Dec-2015	13:28:47	0.020	0.019
7-Dec-2015	13:32:47	0.018	0.016
7-Dec-2015	13:36:47	0.011	0.015
7-Dec-2015	13:40:47	0.016	0.017
7-Dec-2015	13:44:47	0.024	0.018
7-Dec-2015	13:48:47	0.013	0.017
7-Dec-2015	13:52:47	0.014	0.013
7-Dec-2015	13:56:47	0.013	0.016
7-Dec-2015	14:00:47	0.022	0.023
7-Dec-2015	14:04:47	0.035	0.028
7-Dec-2015	14:08:47	0.027	0.025
7-Dec-2015	14:12:47	0.012	0.020
7-Dec-2015	14:16:47	0.021	0.034
7-Dec-2015	14:20:47	0.070	0.072
7-Dec-2015	14:24:47	0.126	0.078
7-Dec-2015	14:28:47	0.038	0.059
7-Dec-2015	14:32:47	0.014	0.022
7-Dec-2015	14:36:47	0.014	0.015
7-Dec-2015	14:40:47	0.016	0.015
7-Dec-2015	14:44:47	0.014	0.015
7-Dec-2015	14:48:47	0.015	0.016
7-Dec-2015	14:52:47	0.018	0.017
7-Dec-2015	14:56:47	0.019	0.020
7-Dec-2015	15:00:47	0.024	0.020
7-Dec-2015	15:04:47	0.017	0.023
7-Dec-2015	15:08:47	0.028	0.022
7-Dec-2015	15:12:47	0.021	0.043
7-Dec-2015	15:16:47	0.080	0.096
7-Dec-2015	15:20:47	0.187	0.108
7-Dec-2015	15:24:47	0.056	0.086
7-Dec-2015	15:28:47	0.015	0.030
7-Dec-2015	15:32:47	0.020	0.020
7-Dec-2015	15:36:47	0.025	0.024
7-Dec-2015	15:40:47	0.028	0.023
7-Dec-2015	15:44:47	0.017	0.024
7-Dec-2015	15:48:47	0.028	0.021
7-Dec-2015	15:52:47	0.019	0.023

DUST MONITORING

December 2015

shading indicates values over the threshold

Monitor: 1

Threshold: 0.15 (mg/m^3)

Date	Time	Value (mg/m^3)	TWA (mg/m^3)
7-Dec-2015	15:56:47	0.021	0.019
7-Dec-2015	16:00:47	0.016	0.018
7-Dec-2015	16:04:47	0.018	0.017
7-Dec-2015	16:08:47	0.016	0.017
7-Dec-2015	16:12:47	0.016	0.056
7-Dec-2015	16:16:47	0.137	0.060
7-Dec-2015	16:20:47	0.026	0.067
7-Dec-2015	16:24:47	0.037	0.035
7-Dec-2015	16:28:47	0.042	0.039
7-Dec-2015	16:32:47	0.038	0.033
7-Dec-2015	16:36:47	0.018	0.025
7-Dec-2015	16:40:47	0.018	0.057
7-Dec-2015	16:44:47	0.134	0.057
7-Dec-2015	16:48:47	0.019	0.058
7-Dec-2015	16:52:47	0.021	0.021
7-Dec-2015	16:56:47	0.024	0.022
7-Dec-2015	17:00:47	0.022	0.022
7-Dec-2015	17:04:47	0.020	0.020
7-Dec-2015	17:08:47	0.019	0.020
8-Dec-2015	07:59:33	0.068	0.073
8-Dec-2015	08:03:33	0.077	0.074
8-Dec-2015	08:07:33	0.077	0.083
8-Dec-2015	08:11:33	0.094	0.091
8-Dec-2015	08:15:33	0.102	0.101
8-Dec-2015	08:19:33	0.107	0.101
8-Dec-2015	08:23:33	0.094	0.097
8-Dec-2015	08:27:33	0.089	0.094
8-Dec-2015	08:31:33	0.098	0.094
8-Dec-2015	08:35:33	0.096	0.094
8-Dec-2015	08:39:33	0.089	0.091
8-Dec-2015	08:43:33	0.089	0.088
8-Dec-2015	08:47:33	0.086	0.085
8-Dec-2015	08:51:33	0.079	0.079
8-Dec-2015	08:55:33	0.073	0.073
8-Dec-2015	08:59:33	0.067	0.070
8-Dec-2015	09:03:33	0.070	0.069
8-Dec-2015	09:07:33	0.071	0.069
8-Dec-2015	09:11:33	0.065	0.068
8-Dec-2015	09:15:33	0.069	0.065
8-Dec-2015	09:19:33	0.061	0.064
8-Dec-2015	09:23:33	0.062	0.062

DUST MONITORING

December 2015

shading indicates values over the threshold

Monitor: 1

Threshold: 0.15 (mg/m^3)

Date	Time	Value (mg/m^3)	TWA (mg/m^3)
8-Dec-2015	09:27:33	0.063	0.059
8-Dec-2015	09:31:33	0.053	0.058
8-Dec-2015	09:35:33	0.057	0.054
8-Dec-2015	09:39:33	0.051	0.053
8-Dec-2015	09:43:33	0.051	0.050
8-Dec-2015	09:47:33	0.049	0.049
8-Dec-2015	09:51:33	0.048	0.050
8-Dec-2015	09:55:33	0.053	0.050
8-Dec-2015	09:59:33	0.048	0.050
8-Dec-2015	10:03:33	0.049	0.047
8-Dec-2015	10:07:33	0.045	0.045
8-Dec-2015	10:11:33	0.042	0.047
8-Dec-2015	10:15:33	0.053	0.045
8-Dec-2015	10:19:33	0.040	0.043
8-Dec-2015	10:23:33	0.036	0.052
8-Dec-2015	10:27:33	0.079	0.056
8-Dec-2015	10:31:33	0.052	0.055
8-Dec-2015	10:35:33	0.033	0.040
8-Dec-2015	10:39:33	0.035	0.039
8-Dec-2015	10:43:33	0.050	0.042
8-Dec-2015	10:47:33	0.041	0.040
8-Dec-2015	10:51:33	0.030	0.033
8-Dec-2015	10:55:33	0.028	0.029
8-Dec-2015	10:59:33	0.030	0.028
8-Dec-2015	11:03:33	0.025	0.026
8-Dec-2015	11:07:33	0.023	0.024
8-Dec-2015	11:11:33	0.023	0.024
8-Dec-2015	11:15:33	0.026	0.029
8-Dec-2015	11:19:33	0.037	0.028
8-Dec-2015	11:23:33	0.022	0.027
8-Dec-2015	11:27:33	0.023	0.022
8-Dec-2015	11:31:33	0.021	0.024
8-Dec-2015	11:35:33	0.027	0.023
8-Dec-2015	11:39:33	0.021	0.024
8-Dec-2015	11:43:33	0.023	0.022
8-Dec-2015	11:47:33	0.022	0.023
8-Dec-2015	11:51:33	0.023	0.023
8-Dec-2015	11:55:33	0.023	0.025
8-Dec-2015	11:59:33	0.030	0.025
8-Dec-2015	12:03:33	0.023	0.025
8-Dec-2015	12:07:33	0.022	0.022

DUST MONITORING

December 2015

shading indicates values over the threshold

Monitor: 1

Threshold: 0.15 (mg/m^3)

Date	Time	Value (mg/m^3)	TWA (mg/m^3)
8-Dec-2015	12:11:33	0.022	0.022
8-Dec-2015	12:15:33	0.023	0.024
8-Dec-2015	12:19:33	0.026	0.025
8-Dec-2015	12:23:33	0.027	0.026
8-Dec-2015	12:27:33	0.024	0.025
8-Dec-2015	12:31:33	0.023	0.025
8-Dec-2015	12:35:33	0.029	0.090
8-Dec-2015	12:39:33	0.217	0.096
8-Dec-2015	12:43:33	0.043	0.098
8-Dec-2015	12:47:33	0.034	0.034
8-Dec-2015	12:51:33	0.025	0.027
8-Dec-2015	12:55:33	0.023	0.024
8-Dec-2015	12:59:33	0.024	0.024
8-Dec-2015	13:03:33	0.025	0.025
8-Dec-2015	13:07:33	0.026	0.025
8-Dec-2015	13:11:33	0.024	0.025
8-Dec-2015	13:15:33	0.026	0.025
8-Dec-2015	13:19:33	0.024	0.025
8-Dec-2015	13:23:33	0.025	0.028
8-Dec-2015	13:27:33	0.036	0.028
8-Dec-2015	13:31:33	0.022	0.027
8-Dec-2015	13:35:33	0.022	0.025
8-Dec-2015	13:39:33	0.030	0.036
8-Dec-2015	13:43:33	0.057	0.043
8-Dec-2015	13:47:33	0.041	0.041
8-Dec-2015	13:51:33	0.025	0.029
8-Dec-2015	13:55:33	0.022	0.025
8-Dec-2015	13:59:33	0.027	0.024
8-Dec-2015	14:03:33	0.024	0.025
8-Dec-2015	14:07:33	0.023	0.023
8-Dec-2015	14:11:33	0.022	0.022
8-Dec-2015	14:15:33	0.022	0.022
8-Dec-2015	14:19:33	0.022	0.022
8-Dec-2015	14:23:33	0.022	0.025
8-Dec-2015	14:27:33	0.030	0.026
8-Dec-2015	14:31:33	0.025	0.025
8-Dec-2015	14:35:33	0.019	0.021
8-Dec-2015	14:39:33	0.019	0.019
8-Dec-2015	14:43:33	0.020	0.019
8-Dec-2015	14:47:33	0.019	0.019
8-Dec-2015	14:51:33	0.019	0.022

DUST MONITORING

December 2015

shading indicates values over the threshold

Monitor: 1

Threshold: 0.15 (mg/m^3)

Date	Time	Value (mg/m^3)	TWA (mg/m^3)
8-Dec-2015	14:55:33	0.029	0.028
8-Dec-2015	14:59:33	0.037	0.028
8-Dec-2015	15:03:33	0.017	0.027
9-Dec-2015	10:59:02	0.046	0.042
9-Dec-2015	11:03:02	0.037	0.039
9-Dec-2015	11:07:02	0.035	0.036
9-Dec-2015	11:11:02	0.035	0.035
9-Dec-2015	11:15:02	0.034	0.035
9-Dec-2015	11:19:02	0.036	0.035
9-Dec-2015	11:23:02	0.036	0.036
9-Dec-2015	11:27:02	0.035	0.035
9-Dec-2015	11:31:02	0.035	0.035
9-Dec-2015	11:35:02	0.035	0.035
9-Dec-2015	11:39:02	0.034	0.034
9-Dec-2015	11:43:02	0.034	0.034
9-Dec-2015	11:47:02	0.034	0.035
9-Dec-2015	11:51:02	0.036	0.035
9-Dec-2015	11:55:02	0.035	0.035
9-Dec-2015	11:59:02	0.034	0.035
9-Dec-2015	12:03:02	0.035	0.035
9-Dec-2015	12:07:02	0.035	0.035
9-Dec-2015	12:11:02	0.036	0.036
9-Dec-2015	12:15:02	0.037	0.037
9-Dec-2015	12:19:02	0.037	0.037
9-Dec-2015	12:23:02	0.037	0.037
9-Dec-2015	12:27:02	0.036	0.037
9-Dec-2015	12:31:02	0.037	0.037
9-Dec-2015	12:35:02	0.037	0.036
9-Dec-2015	12:39:02	0.035	0.035
9-Dec-2015	12:43:02	0.034	0.035
9-Dec-2015	12:47:02	0.036	0.036
9-Dec-2015	12:51:02	0.037	0.037
9-Dec-2015	12:55:02	0.037	0.037
9-Dec-2015	12:59:02	0.037	0.037
9-Dec-2015	13:03:02	0.037	0.037
9-Dec-2015	13:07:02	0.038	0.038
9-Dec-2015	13:11:02	0.038	0.038
9-Dec-2015	13:15:02	0.037	0.037
9-Dec-2015	13:19:02	0.037	0.037
9-Dec-2015	13:23:02	0.036	0.036
9-Dec-2015	13:27:02	0.036	0.036

DUST MONITORING

December 2015

shading indicates values over the threshold

Monitor: 1

Threshold: 0.15 (mg/m^3)

Date	Time	Value (mg/m^3)	TWA (mg/m^3)
9-Dec-2015	13:31:02	0.036	0.036
9-Dec-2015	13:35:02	0.037	0.037
9-Dec-2015	13:39:02	0.038	0.038
9-Dec-2015	13:43:02	0.039	0.038
9-Dec-2015	13:47:02	0.036	0.037
9-Dec-2015	13:51:02	0.037	0.037
9-Dec-2015	13:55:02	0.037	0.037
9-Dec-2015	13:59:02	0.038	0.037
9-Dec-2015	14:03:02	0.037	0.038
9-Dec-2015	14:07:02	0.038	0.037
9-Dec-2015	14:11:02	0.037	0.037
9-Dec-2015	14:15:02	0.037	0.037
9-Dec-2015	14:19:02	0.037	0.037
9-Dec-2015	14:23:02	0.037	0.037
9-Dec-2015	14:27:02	0.037	0.037
9-Dec-2015	14:31:02	0.038	0.037
9-Dec-2015	14:35:02	0.037	0.038
9-Dec-2015	14:39:02	0.038	0.038
9-Dec-2015	14:43:02	0.038	0.038
9-Dec-2015	14:47:02	0.038	0.038
9-Dec-2015	14:51:02	0.039	0.038
9-Dec-2015	14:55:02	0.038	0.038
9-Dec-2015	14:59:02	0.038	0.039
9-Dec-2015	15:03:02	0.040	0.039
9-Dec-2015	15:07:02	0.038	0.039
9-Dec-2015	15:11:02	0.039	0.040
9-Dec-2015	15:15:02	0.043	0.040
9-Dec-2015	15:19:02	0.038	0.040
9-Dec-2015	15:23:02	0.039	0.039
9-Dec-2015	15:27:02	0.039	0.039
9-Dec-2015	15:31:02	0.039	0.039
9-Dec-2015	15:35:02	0.040	0.040
9-Dec-2015	15:39:02	0.040	0.040
9-Dec-2015	15:43:02	0.040	0.040
9-Dec-2015	15:47:02	0.040	0.042
9-Dec-2015	15:51:02	0.045	0.043
9-Dec-2015	15:55:02	0.043	0.043
9-Dec-2015	15:59:02	0.041	0.041
9-Dec-2015	16:03:02	0.040	0.041
9-Dec-2015	16:07:02	0.041	0.041
9-Dec-2015	16:11:02	0.042	0.042

DUST MONITORING

December 2015

shading indicates values over the threshold

Monitor: 1

Threshold: 0.15 (mg/m^3)

Date	Time	Value (mg/m^3)	TWA (mg/m^3)
9-Dec-2015	16:15:02	0.043	0.042
9-Dec-2015	16:19:02	0.042	0.043
9-Dec-2015	16:23:02	0.043	0.042
9-Dec-2015	16:27:02	0.042	0.043
9-Dec-2015	16:31:02	0.045	0.043
9-Dec-2015	16:35:02	0.043	0.043
9-Dec-2015	16:39:02	0.042	0.043
9-Dec-2015	16:43:02	0.043	0.043
9-Dec-2015	16:47:02	0.044	0.043
9-Dec-2015	16:51:02	0.043	0.043
9-Dec-2015	16:55:02	0.043	0.043
9-Dec-2015	16:59:02	0.043	0.043
10-Dec-2015	08:29:47	0.059	0.061
10-Dec-2015	08:33:47	0.063	0.062
10-Dec-2015	08:37:47	0.064	0.063
10-Dec-2015	08:41:47	0.061	0.062
10-Dec-2015	08:45:47	0.062	0.065
10-Dec-2015	08:49:47	0.071	0.068
10-Dec-2015	08:53:47	0.072	0.072
10-Dec-2015	08:57:47	0.074	0.073
10-Dec-2015	09:01:47	0.072	0.072
10-Dec-2015	09:05:47	0.071	0.070
10-Dec-2015	09:09:47	0.066	0.066
10-Dec-2015	09:13:47	0.061	0.064
10-Dec-2015	09:17:47	0.064	0.071
10-Dec-2015	09:21:47	0.087	0.074
10-Dec-2015	09:25:47	0.071	0.073
10-Dec-2015	09:29:47	0.062	0.064
10-Dec-2015	09:33:47	0.058	0.060
10-Dec-2015	09:37:47	0.061	0.059
10-Dec-2015	09:41:47	0.059	0.059
10-Dec-2015	09:45:47	0.057	0.058
10-Dec-2015	09:49:47	0.059	0.059
10-Dec-2015	09:53:47	0.060	0.059
10-Dec-2015	09:57:47	0.059	0.059
10-Dec-2015	10:01:47	0.057	0.057
10-Dec-2015	10:05:47	0.055	0.055
10-Dec-2015	10:09:47	0.053	0.054
10-Dec-2015	10:13:47	0.053	0.053
10-Dec-2015	10:17:47	0.053	0.053
10-Dec-2015	10:21:47	0.052	0.052

DUST MONITORING

December 2015

shading indicates values over the threshold

Monitor: 1

Threshold: 0.15 (mg/m^3)

Date	Time	Value (mg/m^3)	TWA (mg/m^3)
10-Dec-2015	10:25:47	0.050	0.050
10-Dec-2015	10:29:47	0.049	0.049
10-Dec-2015	10:33:47	0.048	0.049
10-Dec-2015	10:37:47	0.051	0.050
10-Dec-2015	10:41:47	0.050	0.049
10-Dec-2015	10:45:47	0.047	0.047
10-Dec-2015	10:49:47	0.045	0.046
10-Dec-2015	10:53:47	0.045	0.045
10-Dec-2015	10:57:47	0.044	0.044
10-Dec-2015	11:01:47	0.043	0.043
10-Dec-2015	11:05:47	0.043	0.042
10-Dec-2015	11:09:47	0.041	0.041
10-Dec-2015	11:13:47	0.040	0.040
10-Dec-2015	11:17:47	0.040	0.040
10-Dec-2015	11:21:47	0.039	0.039
10-Dec-2015	11:25:47	0.039	0.039
10-Dec-2015	11:29:47	0.038	0.038
10-Dec-2015	11:33:47	0.038	0.038
10-Dec-2015	11:37:47	0.038	0.038
10-Dec-2015	11:41:47	0.039	0.039
10-Dec-2015	11:45:47	0.039	0.039
10-Dec-2015	11:49:47	0.040	0.042
10-Dec-2015	11:53:47	0.046	0.099
10-Dec-2015	11:57:47	0.212	0.099
10-Dec-2015	12:01:47	0.039	0.096
10-Dec-2015	12:05:47	0.038	0.038
10-Dec-2015	12:09:47	0.037	0.037
10-Dec-2015	12:13:47	0.036	0.038
10-Dec-2015	12:17:47	0.040	0.038
10-Dec-2015	12:21:47	0.039	0.039
10-Dec-2015	12:25:47	0.038	0.075
10-Dec-2015	12:29:47	0.149	0.074
10-Dec-2015	12:33:47	0.036	0.074
10-Dec-2015	12:37:47	0.038	0.057
10-Dec-2015	12:41:47	0.096	0.059
10-Dec-2015	12:45:47	0.042	0.058
10-Dec-2015	12:49:47	0.036	0.038
10-Dec-2015	12:53:47	0.036	0.037
10-Dec-2015	12:57:47	0.039	0.037
10-Dec-2015	13:01:47	0.037	0.037
10-Dec-2015	13:05:47	0.035	0.036

DUST MONITORING

December 2015

shading indicates values over the threshold

Monitor: 1

Threshold: 0.15 (mg/m^3)

Date	Time	Value (mg/m^3)	TWA (mg/m^3)
10-Dec-2015	13:09:47	0.035	0.035
10-Dec-2015	13:13:47	0.035	0.035
10-Dec-2015	13:17:47	0.035	0.035
10-Dec-2015	13:21:47	0.036	0.035
10-Dec-2015	13:25:47	0.035	0.035
10-Dec-2015	13:29:47	0.034	0.034
10-Dec-2015	13:33:47	0.033	0.033
10-Dec-2015	13:37:47	0.033	0.033
10-Dec-2015	13:41:47	0.033	0.033
10-Dec-2015	13:45:47	0.033	0.034
10-Dec-2015	13:49:47	0.035	0.034
10-Dec-2015	13:53:47	0.035	0.035
10-Dec-2015	13:57:47	0.034	0.035
10-Dec-2015	14:01:47	0.035	0.034
10-Dec-2015	14:05:47	0.034	0.034
10-Dec-2015	14:09:47	0.034	0.034
10-Dec-2015	14:13:47	0.033	0.033
10-Dec-2015	14:17:47	0.033	0.033
10-Dec-2015	14:21:47	0.033	0.033
10-Dec-2015	14:25:47	0.033	0.033
10-Dec-2015	14:29:47	0.032	0.033
10-Dec-2015	14:33:47	0.034	0.036
10-Dec-2015	14:37:47	0.041	0.038
10-Dec-2015	14:41:47	0.039	0.040
10-Dec-2015	14:45:47	0.039	0.039
10-Dec-2015	14:49:47	0.039	0.039
10-Dec-2015	14:53:47	0.040	0.040
10-Dec-2015	14:57:47	0.041	0.041
10-Dec-2015	15:01:47	0.041	0.041
10-Dec-2015	15:05:47	0.041	0.041
10-Dec-2015	15:09:47	0.041	0.042
10-Dec-2015	15:13:47	0.045	0.043
10-Dec-2015	15:17:47	0.043	0.043
10-Dec-2015	15:21:47	0.041	0.042
10-Dec-2015	15:25:47	0.041	0.041
10-Dec-2015	15:29:47	0.041	0.042
10-Dec-2015	15:33:47	0.045	0.044
10-Dec-2015	15:37:47	0.045	0.044
10-Dec-2015	15:41:47	0.042	0.043
10-Dec-2015	15:45:47	0.042	0.042
11-Dec-2015	09:32:10	0.002	0.001

DUST MONITORING

December 2015

shading indicates values over the threshold

Monitor: 1

Threshold: 0.15 (mg/m^3)

Date	Time	Value (mg/m^3)	TWA (mg/m^3)
11-Dec-2015	09:36:10	0.000	0.001
11-Dec-2015	09:40:10	0.000	0.001
11-Dec-2015	09:44:10	0.002	0.001
11-Dec-2015	09:48:10	0.002	0.002
11-Dec-2015	09:52:10	0.003	0.002
11-Dec-2015	09:56:10	0.002	0.002
11-Dec-2015	10:00:10	0.002	0.002
11-Dec-2015	10:04:10	0.001	0.001
11-Dec-2015	10:08:10	0.000	0.001
11-Dec-2015	10:12:10	0.001	0.000
11-Dec-2015	10:16:10	0.000	0.001
11-Dec-2015	10:20:10	0.001	0.000
11-Dec-2015	10:24:10	0.000	0.000
11-Dec-2015	10:28:10	0.000	0.000
11-Dec-2015	10:32:10	0.000	0.000
11-Dec-2015	10:36:10	0.000	0.000
11-Dec-2015	10:40:10	0.000	0.000
11-Dec-2015	10:44:10	0.001	0.001
11-Dec-2015	10:48:10	0.001	0.001
11-Dec-2015	10:52:10	0.002	0.001
11-Dec-2015	10:56:10	0.001	0.001
11-Dec-2015	11:00:10	0.001	0.001
11-Dec-2015	11:04:10	0.001	0.001
11-Dec-2015	11:08:10	0.001	0.001
11-Dec-2015	11:12:10	0.001	0.001
11-Dec-2015	11:16:10	0.001	0.001
11-Dec-2015	11:20:10	0.000	0.000
11-Dec-2015	11:24:10	0.000	0.000
11-Dec-2015	11:28:10	0.001	0.001
11-Dec-2015	11:32:10	0.001	0.001
11-Dec-2015	11:36:10	0.001	0.001
11-Dec-2015	11:40:10	0.002	0.002
11-Dec-2015	11:44:10	0.002	0.002
11-Dec-2015	11:48:10	0.001	0.002
11-Dec-2015	11:52:10	0.002	0.003
11-Dec-2015	11:56:10	0.005	0.007
11-Dec-2015	12:00:10	0.014	0.009
11-Dec-2015	12:04:10	0.008	0.008
11-Dec-2015	12:08:10	0.002	0.005
11-Dec-2015	12:12:10	0.004	0.003
11-Dec-2015	12:16:10	0.004	0.003

DUST MONITORING

December 2015

shading indicates values over the threshold

Monitor: 1

Threshold: 0.15 (mg/m^3)

Date	Time	Value (mg/m^3)	TWA (mg/m^3)
11-Dec-2015	12:20:10	0.000	0.002
11-Dec-2015	12:24:10	0.002	0.001
11-Dec-2015	12:28:10	0.000	0.001
11-Dec-2015	12:32:10	0.000	0.000
11-Dec-2015	12:36:10	0.000	0.000
11-Dec-2015	12:40:10	0.001	0.000
11-Dec-2015	12:44:10	0.000	0.001
11-Dec-2015	12:48:10	0.001	0.001
11-Dec-2015	12:52:10	0.001	0.001
11-Dec-2015	12:56:10	0.001	0.001
11-Dec-2015	13:00:10	0.000	0.000
11-Dec-2015	13:04:10	0.000	0.000
11-Dec-2015	13:08:10	0.001	0.001
11-Dec-2015	13:12:10	0.001	0.002
11-Dec-2015	13:16:10	0.004	0.002
11-Dec-2015	13:20:10	0.002	0.003
11-Dec-2015	13:24:10	0.002	0.002
11-Dec-2015	13:28:10	0.001	0.002
11-Dec-2015	13:32:10	0.002	0.003
11-Dec-2015	13:36:10	0.006	0.003
11-Dec-2015	13:40:10	0.000	0.003
11-Dec-2015	13:44:10	0.004	0.001
11-Dec-2015	13:48:10	0.000	0.001
11-Dec-2015	13:52:10	0.000	0.001
11-Dec-2015	13:56:10	0.004	0.002
11-Dec-2015	14:00:10	0.001	0.002
11-Dec-2015	14:04:10	0.000	0.001
11-Dec-2015	14:08:10	0.001	0.001
11-Dec-2015	14:12:10	0.001	0.002
11-Dec-2015	14:16:10	0.005	0.004
11-Dec-2015	14:20:10	0.005	0.004
11-Dec-2015	14:24:10	0.003	0.003
11-Dec-2015	14:28:10	0.000	0.001
11-Dec-2015	14:32:10	0.001	0.001
11-Dec-2015	14:36:10	0.003	0.002
11-Dec-2015	14:40:10	0.002	0.003
11-Dec-2015	14:44:10	0.004	0.002
11-Dec-2015	14:48:10	0.000	0.002
11-Dec-2015	14:52:10	0.001	0.003
11-Dec-2015	14:56:10	0.008	0.004
11-Dec-2015	15:00:10	0.004	0.005

DUST MONITORING

December 2015

shading indicates values over the threshold

Monitor: 1

Threshold: 0.15 (mg/m^3)

Date	Time	Value (mg/m^3)	TWA (mg/m^3)
11-Dec-2015	15:04:10	0.003	0.007
11-Dec-2015	15:08:10	0.013	0.006
11-Dec-2015	15:12:10	0.001	0.006
11-Dec-2015	15:16:10	0.003	0.003
11-Dec-2015	15:20:10	0.004	0.003
11-Dec-2015	15:24:10	0.003	0.003
11-Dec-2015	15:28:10	0.002	0.002
11-Dec-2015	15:32:10	0.001	0.001
11-Dec-2015	15:36:10	0.001	0.001
11-Dec-2015	15:40:10	0.000	0.001
11-Dec-2015	15:44:10	0.002	0.004
11-Dec-2015	15:48:10	0.010	0.008
11-Dec-2015	15:52:10	0.011	0.008
11-Dec-2015	15:56:10	0.004	0.007
11-Dec-2015	16:00:10	0.005	0.006
11-Dec-2015	16:04:10	0.010	0.008
11-Dec-2015	16:08:10	0.009	0.008
11-Dec-2015	16:12:10	0.006	0.008
11-Dec-2015	16:16:10	0.008	0.007
11-Dec-2015	16:20:10	0.006	0.007
11-Dec-2015	16:24:10	0.006	0.007
11-Dec-2015	16:28:10	0.008	0.010
11-Dec-2015	16:32:10	0.016	0.014
11-Dec-2015	16:36:10	0.019	0.018
11-Dec-2015	16:40:10	0.018	0.017
11-Dec-2015	16:44:10	0.015	0.014
11-Dec-2015	16:48:10	0.009	0.011
11-Dec-2015	16:52:10	0.008	0.009
11-Dec-2015	16:56:10	0.011	0.010
15-Dec-2015	08:24:55	0.008	0.007
15-Dec-2015	08:28:55	0.005	0.005
15-Dec-2015	08:32:55	0.003	0.004
15-Dec-2015	08:36:55	0.005	0.004
15-Dec-2015	08:40:55	0.005	0.006
15-Dec-2015	08:44:55	0.008	0.008
15-Dec-2015	08:48:55	0.011	0.010
15-Dec-2015	08:52:55	0.010	0.010
15-Dec-2015	08:56:55	0.008	0.007
15-Dec-2015	09:00:55	0.003	0.004
15-Dec-2015	09:04:55	0.001	0.004
15-Dec-2015	09:08:55	0.007	0.004

DUST MONITORING

December 2015

shading indicates values over the threshold

Monitor: 1

Threshold: 0.15 (mg/m^3)

Date	Time	Value (mg/m^3)	TWA (mg/m^3)
15-Dec-2015	09:12:55	0.005	0.004
15-Dec-2015	09:16:55	0.001	0.003
15-Dec-2015	09:20:55	0.003	0.001
15-Dec-2015	09:24:55	0.000	0.001
15-Dec-2015	09:28:55	0.001	0.000
15-Dec-2015	09:32:55	0.000	0.001
15-Dec-2015	09:36:55	0.002	0.001
15-Dec-2015	09:40:55	0.001	0.001
15-Dec-2015	09:44:55	0.000	0.000
15-Dec-2015	09:48:55	0.000	0.000
15-Dec-2015	09:52:55	0.000	0.000
15-Dec-2015	09:56:55	0.001	0.001
15-Dec-2015	10:00:55	0.002	0.001
15-Dec-2015	10:04:55	0.000	0.001
15-Dec-2015	10:08:55	0.002	0.002
15-Dec-2015	10:12:55	0.003	0.002
15-Dec-2015	10:16:55	0.000	0.001
15-Dec-2015	10:20:55	0.000	0.000
15-Dec-2015	10:24:55	0.000	0.000
15-Dec-2015	10:28:55	0.001	0.000
15-Dec-2015	10:32:55	0.000	0.000
15-Dec-2015	10:36:55	0.000	0.000
15-Dec-2015	10:40:55	0.000	0.000
15-Dec-2015	10:44:55	0.000	0.000
15-Dec-2015	10:48:55	0.000	0.000
15-Dec-2015	10:52:55	0.000	0.000
15-Dec-2015	10:56:55	0.000	0.000
15-Dec-2015	11:00:55	0.000	0.000
15-Dec-2015	11:04:55	0.000	0.000
15-Dec-2015	11:08:55	0.000	0.000
15-Dec-2015	11:12:55	0.000	0.000
15-Dec-2015	11:16:55	0.000	0.000
15-Dec-2015	11:20:55	0.000	0.000
15-Dec-2015	11:24:55	0.000	0.000
15-Dec-2015	11:28:55	0.000	0.000
15-Dec-2015	11:32:55	0.000	0.000
15-Dec-2015	11:36:55	0.000	0.000
15-Dec-2015	11:40:55	0.000	0.000
15-Dec-2015	11:44:55	0.000	0.000
15-Dec-2015	11:48:55	0.000	0.000
15-Dec-2015	11:52:55	0.000	0.000

DUST MONITORING

December 2015

shading indicates values over the threshold

Monitor: 1

Threshold: 0.15 (mg/m^3)

Date	Time	Value (mg/m^3)	TWA (mg/m^3)
15-Dec-2015	11:56:55	0.000	0.000
15-Dec-2015	12:00:55	0.000	0.000
15-Dec-2015	12:04:55	0.000	0.000
15-Dec-2015	12:08:55	0.000	0.000
15-Dec-2015	12:12:55	0.000	0.000
15-Dec-2015	12:16:55	0.000	0.000
15-Dec-2015	12:20:55	0.000	0.000
15-Dec-2015	12:24:55	0.000	0.000
15-Dec-2015	12:28:55	0.000	0.000
15-Dec-2015	12:32:55	0.000	0.000
15-Dec-2015	12:36:55	0.000	0.001
15-Dec-2015	12:40:55	0.004	0.002
15-Dec-2015	12:44:55	0.002	0.002
15-Dec-2015	12:48:55	0.000	0.001
15-Dec-2015	12:52:55	0.000	0.000
15-Dec-2015	12:56:55	0.000	0.000
15-Dec-2015	13:00:55	0.000	0.000
15-Dec-2015	13:04:55	0.000	0.000
15-Dec-2015	13:08:55	0.000	0.000
15-Dec-2015	13:12:55	0.000	0.000
15-Dec-2015	13:16:55	0.000	0.000
15-Dec-2015	13:20:55	0.000	0.000
15-Dec-2015	13:24:55	0.000	0.000
15-Dec-2015	13:28:55	0.000	0.000
15-Dec-2015	13:32:55	0.000	0.000
15-Dec-2015	13:36:55	0.000	0.000
15-Dec-2015	13:40:55	0.000	0.000
15-Dec-2015	13:44:55	0.000	0.000
15-Dec-2015	13:48:55	0.000	0.000
15-Dec-2015	13:52:55	0.000	0.000
15-Dec-2015	13:56:55	0.000	0.000
15-Dec-2015	14:00:55	0.000	0.002
15-Dec-2015	14:04:55	0.005	0.002
15-Dec-2015	14:08:55	0.000	0.002
15-Dec-2015	14:12:55	0.000	0.000
15-Dec-2015	14:16:55	0.000	0.000
15-Dec-2015	14:20:55	0.001	0.000
15-Dec-2015	14:24:55	0.000	0.000
15-Dec-2015	14:28:55	0.000	0.000
15-Dec-2015	14:32:55	0.000	0.000
15-Dec-2015	14:36:55	0.000	0.001

DUST MONITORING

December 2015

shading indicates values over the threshold

Monitor: 1

Threshold: 0.15 (mg/m^3)

Date	Time	Value (mg/m^3)	TWA (mg/m^3)
15-Dec-2015	14:40:55	0.002	0.001
15-Dec-2015	14:44:55	0.000	0.001
15-Dec-2015	14:48:55	0.000	0.000
15-Dec-2015	14:52:55	0.000	0.000
15-Dec-2015	14:56:55	0.000	0.000
15-Dec-2015	15:00:55	0.001	0.000
15-Dec-2015	15:04:55	0.000	0.000
15-Dec-2015	15:08:55	0.000	0.000
15-Dec-2015	15:12:55	0.000	0.000
15-Dec-2015	15:16:55	0.000	0.000
15-Dec-2015	15:20:55	0.000	0.000
15-Dec-2015	15:24:55	0.000	0.000
15-Dec-2015	15:28:55	0.000	0.000
15-Dec-2015	15:32:55	0.001	0.001
15-Dec-2015	15:36:55	0.001	0.001
15-Dec-2015	15:40:55	0.000	0.000
15-Dec-2015	15:44:55	0.000	0.000
15-Dec-2015	15:48:55	0.000	0.000
15-Dec-2015	15:52:55	0.000	0.000
15-Dec-2015	15:56:55	0.000	0.000
15-Dec-2015	16:00:55	0.000	0.000
15-Dec-2015	16:04:55	0.000	0.000
15-Dec-2015	16:08:55	0.000	0.000
15-Dec-2015	16:12:55	0.000	0.000

DUST MONITORING

December 2015

shading indicates values over the threshold

Monitor: 2

Threshold: 0.15 (mg/m^3)

Date	Time	Value (mg/m^3)	TWA (mg/m^3)
7-Dec-2015	09:39:18	0.025	0.023
7-Dec-2015	09:43:18	0.021	0.022
7-Dec-2015	09:47:18	0.020	0.020
7-Dec-2015	09:51:18	0.019	0.020
7-Dec-2015	09:55:18	0.021	0.019
7-Dec-2015	09:59:18	0.018	0.018
7-Dec-2015	10:03:18	0.016	0.016
7-Dec-2015	10:07:18	0.014	0.015
7-Dec-2015	10:11:18	0.015	0.022
7-Dec-2015	10:15:18	0.037	0.021
7-Dec-2015	10:19:18	0.011	0.020
7-Dec-2015	10:23:18	0.012	0.013
7-Dec-2015	10:27:18	0.015	0.015
7-Dec-2015	10:31:18	0.018	0.016
7-Dec-2015	10:35:18	0.014	0.016
7-Dec-2015	10:39:18	0.016	0.013
7-Dec-2015	10:43:18	0.008	0.012
7-Dec-2015	10:47:18	0.011	0.009
7-Dec-2015	10:51:18	0.009	0.011
7-Dec-2015	10:55:18	0.012	0.011
7-Dec-2015	10:59:18	0.012	0.013
7-Dec-2015	11:03:18	0.015	0.012
7-Dec-2015	11:07:18	0.010	0.012
7-Dec-2015	11:11:18	0.010	0.023
7-Dec-2015	11:15:18	0.048	0.025
7-Dec-2015	11:19:18	0.017	0.025
7-Dec-2015	11:23:18	0.011	0.013
7-Dec-2015	11:27:18	0.010	0.010
7-Dec-2015	11:31:18	0.010	0.010
7-Dec-2015	11:35:18	0.009	0.011
7-Dec-2015	11:39:18	0.014	0.010
7-Dec-2015	11:43:18	0.008	0.013
7-Dec-2015	11:47:18	0.017	0.012
7-Dec-2015	11:51:18	0.010	0.012
7-Dec-2015	11:55:18	0.010	0.010
7-Dec-2015	11:59:18	0.009	0.009
7-Dec-2015	12:03:18	0.009	0.008
7-Dec-2015	12:07:18	0.007	0.008
7-Dec-2015	12:11:18	0.008	0.008
7-Dec-2015	12:15:18	0.008	0.008
7-Dec-2015	12:19:18	0.008	0.011

DUST MONITORING

December 2015

shading indicates values over the threshold

Monitor: 2

Threshold: 0.15 (mg/m^3)

Date	Time	Value (mg/m^3)	TWA (mg/m^3)
7-Dec-2015	12:23:18	0.018	0.011
7-Dec-2015	12:27:18	0.008	0.011
7-Dec-2015	12:31:18	0.008	0.008
7-Dec-2015	12:35:18	0.008	0.008
7-Dec-2015	12:39:18	0.008	0.010
7-Dec-2015	12:43:18	0.015	0.011
7-Dec-2015	12:47:18	0.009	0.011
7-Dec-2015	12:51:18	0.008	0.008
7-Dec-2015	12:55:18	0.008	0.008
7-Dec-2015	12:59:18	0.008	0.009
7-Dec-2015	13:03:18	0.010	0.013
7-Dec-2015	13:07:18	0.020	0.013
7-Dec-2015	13:11:18	0.009	0.013
7-Dec-2015	13:15:18	0.011	0.010
7-Dec-2015	13:19:18	0.011	0.012
7-Dec-2015	13:23:18	0.014	0.012
7-Dec-2015	13:27:18	0.012	0.013
7-Dec-2015	13:31:18	0.012	0.015
7-Dec-2015	13:35:18	0.021	0.014
7-Dec-2015	13:39:18	0.010	0.014
7-Dec-2015	13:43:18	0.012	0.011
7-Dec-2015	13:47:18	0.011	0.011
7-Dec-2015	13:51:18	0.010	0.011
7-Dec-2015	13:55:18	0.011	0.010
7-Dec-2015	13:59:18	0.010	0.011
7-Dec-2015	14:03:18	0.011	0.011
7-Dec-2015	14:07:18	0.012	0.012
7-Dec-2015	14:11:18	0.012	0.012
7-Dec-2015	14:15:18	0.011	0.011
7-Dec-2015	14:19:18	0.011	0.020
7-Dec-2015	14:23:18	0.037	0.040
7-Dec-2015	14:27:18	0.073	0.043
7-Dec-2015	14:31:18	0.018	0.034
7-Dec-2015	14:35:18	0.010	0.013
7-Dec-2015	14:39:18	0.011	0.011
7-Dec-2015	14:43:18	0.013	0.012
7-Dec-2015	14:47:18	0.011	0.011
7-Dec-2015	14:51:18	0.010	0.013
7-Dec-2015	14:55:18	0.019	0.013
7-Dec-2015	14:59:18	0.010	0.014
7-Dec-2015	15:03:18	0.012	0.012

DUST MONITORING

December 2015

shading indicates values over the threshold

Monitor: 2

Threshold: 0.15 (mg/m^3)

Date	Time	Value (mg/m^3)	TWA (mg/m^3)
7-Dec-2015	15:07:18	0.014	0.014
7-Dec-2015	15:11:18	0.015	0.013
7-Dec-2015	15:15:18	0.010	0.012
7-Dec-2015	15:19:18	0.010	0.010
7-Dec-2015	15:23:18	0.011	0.011
7-Dec-2015	15:27:18	0.012	0.011
7-Dec-2015	15:31:18	0.010	0.014
7-Dec-2015	15:35:18	0.020	0.015
7-Dec-2015	15:39:18	0.014	0.018
7-Dec-2015	15:43:18	0.020	0.016
7-Dec-2015	15:47:18	0.013	0.014
7-Dec-2015	15:51:18	0.010	0.012
7-Dec-2015	15:55:18	0.013	0.011
7-Dec-2015	15:59:18	0.010	0.011
7-Dec-2015	16:03:18	0.009	0.010
7-Dec-2015	16:07:18	0.010	0.010
7-Dec-2015	16:11:18	0.010	0.010
7-Dec-2015	16:15:18	0.011	0.011
7-Dec-2015	16:19:18	0.011	0.011
7-Dec-2015	16:23:18	0.012	0.011
7-Dec-2015	16:27:18	0.010	0.011
7-Dec-2015	16:31:18	0.011	0.011
7-Dec-2015	16:35:18	0.011	0.011
7-Dec-2015	16:39:18	0.010	0.011
7-Dec-2015	16:43:18	0.011	0.011
7-Dec-2015	16:47:18	0.011	0.011
7-Dec-2015	16:51:18	0.010	0.011
7-Dec-2015	16:55:18	0.011	0.012
7-Dec-2015	16:59:18	0.016	0.014
7-Dec-2015	17:03:18	0.016	0.014
7-Dec-2015	17:07:18	0.011	0.014
8-Dec-2015	07:59:57	0.050	0.052
8-Dec-2015	08:03:57	0.053	0.057
8-Dec-2015	08:07:57	0.069	0.064
8-Dec-2015	08:11:57	0.071	0.074
8-Dec-2015	08:15:57	0.081	0.075
8-Dec-2015	08:19:57	0.072	0.073
8-Dec-2015	08:23:57	0.065	0.066
8-Dec-2015	08:27:57	0.060	0.061
8-Dec-2015	08:31:57	0.058	0.056
8-Dec-2015	08:35:57	0.051	0.053

DUST MONITORING

December 2015

shading indicates values over the threshold

Monitor: 2

Threshold: 0.15 (mg/m^3)

Date	Time	Value (mg/m^3)	TWA (mg/m^3)
8-Dec-2015	08:39:57	0.049	0.048
8-Dec-2015	08:43:57	0.043	0.044
8-Dec-2015	08:47:57	0.039	0.040
8-Dec-2015	08:51:57	0.038	0.036
8-Dec-2015	08:55:57	0.032	0.033
8-Dec-2015	08:59:57	0.030	0.033
8-Dec-2015	09:03:57	0.037	0.035
8-Dec-2015	09:07:57	0.037	0.036
8-Dec-2015	09:11:57	0.033	0.035
8-Dec-2015	09:15:57	0.034	0.034
8-Dec-2015	09:19:57	0.034	0.035
8-Dec-2015	09:23:57	0.038	0.036
8-Dec-2015	09:27:57	0.037	0.035
8-Dec-2015	09:31:57	0.031	0.034
8-Dec-2015	09:35:57	0.033	0.032
8-Dec-2015	09:39:57	0.033	0.031
8-Dec-2015	09:43:57	0.026	0.029
8-Dec-2015	09:47:57	0.028	0.027
8-Dec-2015	09:51:57	0.026	0.027
8-Dec-2015	09:55:57	0.026	0.025
8-Dec-2015	09:59:57	0.024	0.025
8-Dec-2015	10:03:57	0.025	0.025
8-Dec-2015	10:07:57	0.025	0.025
8-Dec-2015	10:11:57	0.025	0.026
8-Dec-2015	10:15:57	0.027	0.026
8-Dec-2015	10:19:57	0.025	0.027
8-Dec-2015	10:23:57	0.029	0.028
8-Dec-2015	10:27:57	0.029	0.032
8-Dec-2015	10:31:57	0.037	0.031
8-Dec-2015	10:35:57	0.026	0.029
8-Dec-2015	10:39:57	0.023	0.032
8-Dec-2015	10:43:57	0.047	0.037
8-Dec-2015	10:47:57	0.041	0.040
8-Dec-2015	10:51:57	0.033	0.033
8-Dec-2015	10:55:57	0.025	0.028
8-Dec-2015	10:59:57	0.025	0.024
8-Dec-2015	11:03:57	0.023	0.023
8-Dec-2015	11:07:57	0.021	0.021
8-Dec-2015	11:11:57	0.020	0.020
8-Dec-2015	11:15:57	0.020	0.020
9-Dec-2015	11:00:39	0.012	0.011

DUST MONITORING

December 2015

shading indicates values over the threshold

Monitor: 2

Threshold: 0.15 (mg/m^3)

Date	Time	Value (mg/m^3)	TWA (mg/m^3)
9-Dec-2015	11:04:39	0.010	0.011
9-Dec-2015	11:08:39	0.010	0.010
9-Dec-2015	11:12:39	0.010	0.010
9-Dec-2015	11:16:39	0.010	0.010
9-Dec-2015	11:20:39	0.009	0.010
9-Dec-2015	11:24:39	0.010	0.009
9-Dec-2015	11:28:39	0.009	0.010
9-Dec-2015	11:32:39	0.010	0.010
9-Dec-2015	11:36:39	0.010	0.010
9-Dec-2015	11:40:39	0.010	0.010
9-Dec-2015	11:44:39	0.010	0.010
9-Dec-2015	11:48:39	0.011	0.011
9-Dec-2015	11:52:39	0.012	0.011
9-Dec-2015	11:56:39	0.010	0.011
9-Dec-2015	12:00:39	0.010	0.010
9-Dec-2015	12:04:39	0.010	0.010
9-Dec-2015	12:08:39	0.011	0.011
9-Dec-2015	12:12:39	0.012	0.012
9-Dec-2015	12:16:39	0.012	0.012
9-Dec-2015	12:20:39	0.011	0.012
9-Dec-2015	12:24:39	0.013	0.013
9-Dec-2015	12:28:39	0.014	0.014
9-Dec-2015	12:32:39	0.014	0.014
9-Dec-2015	12:36:39	0.015	0.014
9-Dec-2015	12:40:39	0.014	0.014
9-Dec-2015	12:44:39	0.013	0.015
9-Dec-2015	12:48:39	0.017	0.016
9-Dec-2015	12:52:39	0.018	0.017
9-Dec-2015	12:56:39	0.016	0.017
9-Dec-2015	13:00:39	0.016	0.016
9-Dec-2015	13:04:39	0.017	0.017
9-Dec-2015	13:08:39	0.018	0.017
9-Dec-2015	13:12:39	0.016	0.016
9-Dec-2015	13:16:39	0.015	0.015
9-Dec-2015	13:20:39	0.015	0.015
9-Dec-2015	13:24:39	0.015	0.015
9-Dec-2015	13:28:39	0.015	0.015
9-Dec-2015	13:32:39	0.016	0.016
9-Dec-2015	13:36:39	0.016	0.016
9-Dec-2015	13:40:39	0.016	0.016
9-Dec-2015	13:44:39	0.017	0.016

DUST MONITORING

December 2015

shading indicates values over the threshold

Monitor: 2

Threshold: 0.15 (mg/m^3)

Date	Time	Value (mg/m^3)	TWA (mg/m^3)
9-Dec-2015	13:48:39	0.015	0.016
9-Dec-2015	13:52:39	0.016	0.016
9-Dec-2015	13:56:39	0.017	0.016
9-Dec-2015	14:00:39	0.016	0.016
9-Dec-2015	14:04:39	0.016	0.017
9-Dec-2015	14:08:39	0.018	0.017
9-Dec-2015	14:12:39	0.016	0.017
9-Dec-2015	14:16:39	0.016	0.016
9-Dec-2015	14:20:39	0.016	0.016
9-Dec-2015	14:24:39	0.016	0.016
9-Dec-2015	14:28:39	0.016	0.016
9-Dec-2015	14:32:39	0.017	0.016
9-Dec-2015	14:36:39	0.016	0.017
9-Dec-2015	14:40:39	0.017	0.017
9-Dec-2015	14:44:39	0.017	0.017
9-Dec-2015	14:48:39	0.017	0.018
9-Dec-2015	14:52:39	0.019	0.018
9-Dec-2015	14:56:39	0.018	0.018
9-Dec-2015	15:00:39	0.017	0.018
9-Dec-2015	15:04:39	0.019	0.018
9-Dec-2015	15:08:39	0.017	0.018
9-Dec-2015	15:12:39	0.018	0.018
9-Dec-2015	15:16:39	0.020	0.019
9-Dec-2015	15:20:39	0.018	0.019
9-Dec-2015	15:24:39	0.020	0.019
9-Dec-2015	15:28:39	0.019	0.019
9-Dec-2015	15:32:39	0.019	0.019
9-Dec-2015	15:36:39	0.020	0.019
9-Dec-2015	15:40:39	0.019	0.020
9-Dec-2015	15:44:39	0.020	0.019
9-Dec-2015	15:48:39	0.019	0.021
9-Dec-2015	15:52:39	0.024	0.021
9-Dec-2015	15:56:39	0.021	0.022
9-Dec-2015	16:00:39	0.020	0.020
9-Dec-2015	16:04:39	0.019	0.020
9-Dec-2015	16:08:39	0.020	0.020
9-Dec-2015	16:12:39	0.020	0.020
9-Dec-2015	16:16:39	0.020	0.020
9-Dec-2015	16:20:39	0.020	0.020
9-Dec-2015	16:24:39	0.020	0.020
9-Dec-2015	16:28:39	0.020	0.021

DUST MONITORING

December 2015

shading indicates values over the threshold

Monitor: 2

Threshold: 0.15 (mg/m^3)

Date	Time	Value (mg/m^3)	TWA (mg/m^3)
9-Dec-2015	16:32:39	0.022	0.021
9-Dec-2015	16:36:39	0.021	0.021
9-Dec-2015	16:40:39	0.019	0.020
9-Dec-2015	16:44:39	0.020	0.020
9-Dec-2015	16:48:39	0.020	0.020
9-Dec-2015	16:52:39	0.020	0.020
9-Dec-2015	16:56:39	0.021	0.021
9-Dec-2015	17:00:39	0.021	0.021
10-Dec-2015	08:31:27	0.033	0.036
10-Dec-2015	08:35:27	0.038	0.035
10-Dec-2015	08:39:27	0.034	0.035
10-Dec-2015	08:43:27	0.034	0.035
10-Dec-2015	08:47:27	0.036	0.036
10-Dec-2015	08:51:27	0.039	0.039
10-Dec-2015	08:55:27	0.042	0.041
10-Dec-2015	08:59:27	0.042	0.042
10-Dec-2015	09:03:27	0.042	0.041
10-Dec-2015	09:07:27	0.039	0.039
10-Dec-2015	09:11:27	0.036	0.036
10-Dec-2015	09:15:27	0.033	0.034
10-Dec-2015	09:19:27	0.034	0.039
10-Dec-2015	09:23:27	0.049	0.040
10-Dec-2015	09:27:27	0.037	0.040
10-Dec-2015	09:31:27	0.034	0.034
10-Dec-2015	09:35:27	0.030	0.033
10-Dec-2015	09:39:27	0.034	0.032
10-Dec-2015	09:43:27	0.032	0.032
10-Dec-2015	09:47:27	0.030	0.032
10-Dec-2015	09:51:27	0.033	0.033
10-Dec-2015	09:55:27	0.035	0.034
10-Dec-2015	09:59:27	0.035	0.034
10-Dec-2015	10:03:27	0.033	0.033
10-Dec-2015	10:07:27	0.031	0.031
10-Dec-2015	10:11:27	0.030	0.030
10-Dec-2015	10:15:27	0.028	0.029
10-Dec-2015	10:19:27	0.028	0.028
10-Dec-2015	10:23:27	0.029	0.028
10-Dec-2015	10:27:27	0.027	0.028
10-Dec-2015	10:31:27	0.028	0.027
10-Dec-2015	10:35:27	0.027	0.028
10-Dec-2015	10:39:27	0.030	0.029

DUST MONITORING

December 2015

shading indicates values over the threshold

Monitor: 2

Threshold: 0.15 (mg/m^3)

Date	Time	Value (mg/m^3)	TWA (mg/m^3)
10-Dec-2015	10:43:27	0.031	0.030
10-Dec-2015	10:47:27	0.028	0.029
10-Dec-2015	10:51:27	0.027	0.027
10-Dec-2015	10:55:27	0.026	0.026
10-Dec-2015	10:59:27	0.025	0.025
10-Dec-2015	11:03:27	0.025	0.025
10-Dec-2015	11:07:27	0.026	0.026
10-Dec-2015	11:11:27	0.027	0.026
10-Dec-2015	11:15:27	0.024	0.025
10-Dec-2015	11:19:27	0.023	0.024
10-Dec-2015	11:23:27	0.025	0.024
10-Dec-2015	11:27:27	0.025	0.025
10-Dec-2015	11:31:27	0.024	0.025
10-Dec-2015	11:35:27	0.026	0.026
10-Dec-2015	11:39:27	0.028	0.027
10-Dec-2015	11:43:27	0.027	0.028
10-Dec-2015	11:47:27	0.028	0.028
10-Dec-2015	11:51:27	0.028	0.028
10-Dec-2015	11:55:27	0.028	0.028
10-Dec-2015	11:59:27	0.027	0.027
10-Dec-2015	12:03:27	0.027	0.026
10-Dec-2015	12:07:27	0.024	0.024
10-Dec-2015	12:11:27	0.022	0.023
10-Dec-2015	12:15:27	0.022	0.023
10-Dec-2015	12:19:27	0.024	0.023
10-Dec-2015	12:23:27	0.024	0.024
10-Dec-2015	12:27:27	0.024	0.024
10-Dec-2015	12:31:27	0.023	0.023
10-Dec-2015	12:35:27	0.023	0.023
10-Dec-2015	12:39:27	0.023	0.023
10-Dec-2015	12:43:27	0.023	0.024
10-Dec-2015	12:47:27	0.027	0.024
10-Dec-2015	12:51:27	0.022	0.024
10-Dec-2015	12:55:27	0.023	0.023
10-Dec-2015	12:59:27	0.025	0.023
10-Dec-2015	13:03:27	0.021	0.023
10-Dec-2015	13:07:27	0.023	0.023
10-Dec-2015	13:11:27	0.025	0.025
10-Dec-2015	13:15:27	0.026	0.026
10-Dec-2015	13:19:27	0.027	0.027
10-Dec-2015	13:23:27	0.029	0.028

DUST MONITORING

December 2015

shading indicates values over the threshold

Monitor: 2

Threshold: 0.15 (mg/m^3)

Date	Time	Value (mg/m^3)	TWA (mg/m^3)
10-Dec-2015	13:27:27	0.027	0.027
10-Dec-2015	13:31:27	0.026	0.026
10-Dec-2015	13:35:27	0.026	0.026
10-Dec-2015	13:39:27	0.027	0.026
10-Dec-2015	13:43:27	0.026	0.027
10-Dec-2015	13:47:27	0.027	0.027
10-Dec-2015	13:51:27	0.027	0.027
10-Dec-2015	13:55:27	0.028	0.027
10-Dec-2015	13:59:27	0.027	0.027
10-Dec-2015	14:03:27	0.027	0.027
10-Dec-2015	14:07:27	0.027	0.027
10-Dec-2015	14:11:27	0.027	0.027
10-Dec-2015	14:15:27	0.028	0.027
10-Dec-2015	14:19:27	0.027	0.027
10-Dec-2015	14:23:27	0.025	0.026
10-Dec-2015	14:27:27	0.025	0.025
10-Dec-2015	14:31:27	0.025	0.026
10-Dec-2015	14:35:27	0.028	0.028
10-Dec-2015	14:39:27	0.031	0.029
10-Dec-2015	14:43:27	0.028	0.029
10-Dec-2015	14:47:27	0.028	0.028
10-Dec-2015	14:51:27	0.028	0.028
10-Dec-2015	14:55:27	0.028	0.029
10-Dec-2015	14:59:27	0.030	0.029
10-Dec-2015	15:03:27	0.030	0.030
11-Dec-2015	11:21:50	0.009	0.005
11-Dec-2015	11:25:50	0.001	0.004
11-Dec-2015	11:29:50	0.001	0.001
11-Dec-2015	11:33:50	0.000	0.000
11-Dec-2015	11:37:50	0.000	0.000
11-Dec-2015	11:41:50	0.001	0.001
11-Dec-2015	11:45:50	0.001	0.001
11-Dec-2015	11:49:50	0.001	0.001
11-Dec-2015	11:53:50	0.000	0.000
11-Dec-2015	11:57:50	0.000	0.000
11-Dec-2015	12:01:50	0.000	0.000
11-Dec-2015	12:05:50	0.000	0.000
11-Dec-2015	12:09:50	0.000	0.000
11-Dec-2015	12:13:50	0.000	0.000
11-Dec-2015	12:17:50	0.000	0.000
11-Dec-2015	12:21:50	0.000	0.000

DUST MONITORING

December 2015

shading indicates values over the threshold

Monitor: 2

Threshold: 0.15 (mg/m^3)

Date	Time	Value (mg/m^3)	TWA (mg/m^3)
11-Dec-2015	12:25:50	0.000	0.000
11-Dec-2015	12:29:50	0.001	0.000
11-Dec-2015	12:33:50	0.000	0.002
11-Dec-2015	12:37:50	0.004	0.002
11-Dec-2015	12:41:50	0.001	0.002
11-Dec-2015	12:45:50	0.000	0.001
11-Dec-2015	12:49:50	0.001	0.001
11-Dec-2015	12:53:50	0.001	0.001
11-Dec-2015	12:57:50	0.000	0.000
11-Dec-2015	13:01:50	0.000	0.000
11-Dec-2015	13:05:50	0.001	0.001
11-Dec-2015	13:09:50	0.001	0.002
11-Dec-2015	13:13:50	0.003	0.002
11-Dec-2015	13:17:50	0.003	0.003
11-Dec-2015	13:21:50	0.004	0.004
11-Dec-2015	13:25:50	0.004	0.004
11-Dec-2015	13:29:50	0.004	0.004
11-Dec-2015	13:33:50	0.004	0.004
11-Dec-2015	13:37:50	0.005	0.005
11-Dec-2015	13:41:50	0.006	0.004
11-Dec-2015	13:45:50	0.002	0.003
11-Dec-2015	13:49:50	0.002	0.002
11-Dec-2015	13:53:50	0.002	0.002
11-Dec-2015	13:57:50	0.002	0.003
11-Dec-2015	14:01:50	0.004	0.003
11-Dec-2015	14:05:50	0.004	0.004
11-Dec-2015	14:09:50	0.003	0.004
11-Dec-2015	14:13:50	0.004	0.003
11-Dec-2015	14:17:50	0.002	0.002
11-Dec-2015	14:21:50	0.001	0.003
11-Dec-2015	14:25:50	0.006	0.005
11-Dec-2015	14:29:50	0.007	0.007
11-Dec-2015	14:33:50	0.007	0.006
11-Dec-2015	14:37:50	0.005	0.008
11-Dec-2015	14:41:50	0.011	0.009
11-Dec-2015	14:45:50	0.011	0.011
11-Dec-2015	14:49:50	0.011	0.010
11-Dec-2015	14:53:50	0.009	0.010
11-Dec-2015	14:57:50	0.009	0.009
11-Dec-2015	15:01:50	0.009	0.010
11-Dec-2015	15:05:50	0.012	0.010

DUST MONITORING

December 2015

shading indicates values over the threshold

Monitor: 2

Threshold: 0.15 (mg/m^3)

Date	Time	Value (mg/m^3)	TWA (mg/m^3)
11-Dec-2015	15:09:50	0.009	0.010
11-Dec-2015	15:13:50	0.009	0.009
11-Dec-2015	15:17:50	0.010	0.011
11-Dec-2015	15:21:50	0.013	0.012
11-Dec-2015	15:25:50	0.014	0.014
11-Dec-2015	15:29:50	0.016	0.015
11-Dec-2015	15:33:50	0.016	0.016
11-Dec-2015	15:37:50	0.017	0.017
11-Dec-2015	15:41:50	0.018	0.018
11-Dec-2015	15:45:50	0.019	0.020
11-Dec-2015	15:49:50	0.024	0.021
11-Dec-2015	15:53:50	0.020	0.021
11-Dec-2015	15:57:50	0.018	0.020
11-Dec-2015	16:01:50	0.022	0.018
11-Dec-2015	16:05:50	0.015	0.016
11-Dec-2015	16:09:50	0.012	0.013
11-Dec-2015	16:13:50	0.013	0.013
11-Dec-2015	16:17:50	0.013	0.014
11-Dec-2015	16:21:50	0.016	0.015
11-Dec-2015	16:25:50	0.017	0.018
11-Dec-2015	16:29:50	0.022	0.021
11-Dec-2015	16:33:50	0.023	0.023
11-Dec-2015	16:37:50	0.025	0.024
11-Dec-2015	16:41:50	0.025	0.025
11-Dec-2015	16:45:50	0.024	0.024
11-Dec-2015	16:49:50	0.024	0.024
15-Dec-2015	08:44:18	0.007	0.006
15-Dec-2015	08:48:18	0.004	0.005
15-Dec-2015	08:52:18	0.004	0.004
15-Dec-2015	08:56:18	0.005	0.004
15-Dec-2015	09:00:18	0.002	0.003
15-Dec-2015	09:04:18	0.003	0.003
15-Dec-2015	09:08:18	0.003	0.003
15-Dec-2015	09:12:18	0.002	0.003
15-Dec-2015	09:16:18	0.003	0.003
15-Dec-2015	09:20:18	0.003	0.003
15-Dec-2015	09:24:18	0.003	0.003
15-Dec-2015	09:28:18	0.003	0.003
15-Dec-2015	09:32:18	0.004	0.004
15-Dec-2015	09:36:18	0.004	0.004
15-Dec-2015	09:40:18	0.004	0.004

DUST MONITORING

December 2015

shading indicates values over the threshold

Monitor: 2

Threshold: 0.15 (mg/m^3)

Date	Time	Value (mg/m^3)	TWA (mg/m^3)
15-Dec-2015	09:44:18	0.003	0.004
15-Dec-2015	09:48:18	0.006	0.005
15-Dec-2015	09:52:18	0.005	0.006
15-Dec-2015	09:56:18	0.006	0.006
15-Dec-2015	10:00:18	0.007	0.007
15-Dec-2015	10:04:18	0.007	0.008
15-Dec-2015	10:08:18	0.010	0.008
15-Dec-2015	10:12:18	0.007	0.009
15-Dec-2015	10:16:18	0.010	0.012
15-Dec-2015	10:20:18	0.020	0.023
15-Dec-2015	10:24:18	0.039	0.026
15-Dec-2015	10:28:18	0.020	0.023
15-Dec-2015	10:32:18	0.011	0.014
15-Dec-2015	10:36:18	0.011	0.011
15-Dec-2015	10:40:18	0.011	0.010
15-Dec-2015	10:44:18	0.008	0.008
15-Dec-2015	10:48:18	0.006	0.010
15-Dec-2015	10:52:18	0.016	0.009
15-Dec-2015	10:56:18	0.006	0.020
15-Dec-2015	11:00:18	0.039	0.017
15-Dec-2015	11:04:18	0.007	0.017
15-Dec-2015	11:08:18	0.006	0.006
15-Dec-2015	11:12:18	0.006	0.006
15-Dec-2015	11:16:18	0.007	0.006
15-Dec-2015	11:20:18	0.006	0.006
15-Dec-2015	11:24:18	0.006	0.006
15-Dec-2015	11:28:18	0.006	0.006
15-Dec-2015	11:32:18	0.007	0.009
15-Dec-2015	11:36:18	0.013	0.009
15-Dec-2015	11:40:18	0.007	0.009
15-Dec-2015	11:44:18	0.006	0.007
15-Dec-2015	11:48:18	0.007	0.006
15-Dec-2015	11:52:18	0.006	0.007
15-Dec-2015	11:56:18	0.007	0.006
15-Dec-2015	12:00:18	0.006	0.007
15-Dec-2015	12:04:18	0.007	0.006
15-Dec-2015	12:08:18	0.006	0.008
15-Dec-2015	12:12:18	0.012	0.008
15-Dec-2015	12:16:18	0.006	0.007
15-Dec-2015	12:20:18	0.004	0.005
15-Dec-2015	12:24:18	0.004	0.004

DUST MONITORING

December 2015

shading indicates values over the threshold

Monitor: 2

Threshold: 0.15 (mg/m^3)

Date	Time	Value (mg/m^3)	TWA (mg/m^3)
15-Dec-2015	12:28:18	0.004	0.004
15-Dec-2015	12:32:18	0.003	0.010
15-Dec-2015	12:36:18	0.023	0.010
15-Dec-2015	12:40:18	0.004	0.015
15-Dec-2015	12:44:18	0.018	0.009
15-Dec-2015	12:48:18	0.005	0.010
15-Dec-2015	12:52:18	0.008	0.008
15-Dec-2015	12:56:18	0.012	0.011
15-Dec-2015	13:00:18	0.012	0.014
15-Dec-2015	13:04:18	0.018	0.013
15-Dec-2015	13:08:18	0.010	0.012
15-Dec-2015	13:12:18	0.009	0.009
15-Dec-2015	13:16:18	0.008	0.013
15-Dec-2015	13:20:18	0.023	0.013
15-Dec-2015	13:24:18	0.008	0.018
15-Dec-2015	13:28:18	0.024	0.012
15-Dec-2015	13:32:18	0.003	0.009
15-Dec-2015	13:36:18	0.001	0.002
15-Dec-2015	13:40:18	0.001	0.001
15-Dec-2015	13:44:18	0.001	0.001
15-Dec-2015	13:48:18	0.000	0.000
15-Dec-2015	13:52:18	0.000	0.000
15-Dec-2015	13:56:18	0.001	0.001
15-Dec-2015	14:00:18	0.001	0.001
15-Dec-2015	14:04:18	0.001	0.004
15-Dec-2015	14:08:18	0.011	0.004
15-Dec-2015	14:12:18	0.000	0.004
15-Dec-2015	14:16:18	0.000	0.000
15-Dec-2015	14:20:18	0.000	0.000
15-Dec-2015	14:24:18	0.000	0.000
15-Dec-2015	14:28:18	0.000	0.000
15-Dec-2015	14:32:18	0.000	0.000
15-Dec-2015	14:36:18	0.001	0.000
15-Dec-2015	14:40:18	0.000	0.000
15-Dec-2015	14:44:18	0.000	0.000
15-Dec-2015	14:48:18	0.001	0.001
15-Dec-2015	14:52:18	0.002	0.002
15-Dec-2015	14:56:18	0.002	0.002
15-Dec-2015	15:00:18	0.002	0.001
15-Dec-2015	15:04:18	0.000	0.001
15-Dec-2015	15:08:18	0.000	0.000

DUST MONITORING

December 2015

shading indicates values over the threshold

Monitor: **2**

Threshold: **0.15 (mg/m^3)**

Date	Time	Value (mg/m^3)	TWA (mg/m^3)
15-Dec-2015	15:12:18	0.000	0.000
15-Dec-2015	15:16:18	0.000	0.000
15-Dec-2015	15:20:18	0.000	0.001
15-Dec-2015	15:24:18	0.003	0.001
15-Dec-2015	15:28:18	0.000	0.001
15-Dec-2015	15:32:18	0.000	0.000
15-Dec-2015	15:36:18	0.000	0.005
15-Dec-2015	15:40:18	0.015	0.005
15-Dec-2015	15:44:18	0.000	0.005
15-Dec-2015	15:48:18	0.000	0.000
15-Dec-2015	15:52:18	0.001	0.001
15-Dec-2015	15:56:18	0.002	0.002
15-Dec-2015	16:00:18	0.003	0.003
15-Dec-2015	16:04:18	0.003	0.003
15-Dec-2015	16:08:18	0.003	0.005
15-Dec-2015	16:12:18	0.009	0.005
15-Dec-2015	16:16:18	0.002	0.004
15-Dec-2015	16:20:18	0.002	0.003
15-Dec-2015	16:24:18	0.005	0.004
15-Dec-2015	16:28:18	0.004	0.005

DUST MONITORING

December 2015

shading indicates values over the threshold

Monitor: 3

Threshold: 0.15 (mg/m^3)

Date	Time	Value (mg/m^3)	TWA (mg/m^3)
7-Dec-2015	09:36:47	0.031	0.032
7-Dec-2015	09:40:47	0.032	0.031
7-Dec-2015	09:44:47	0.029	0.028
7-Dec-2015	09:48:47	0.024	0.027
7-Dec-2015	09:52:47	0.027	0.027
7-Dec-2015	09:56:47	0.029	0.028
7-Dec-2015	10:00:47	0.028	0.026
7-Dec-2015	10:04:47	0.021	0.022
7-Dec-2015	10:08:47	0.017	0.031
7-Dec-2015	10:12:47	0.056	0.032
7-Dec-2015	10:16:47	0.022	0.031
7-Dec-2015	10:20:47	0.015	0.019
7-Dec-2015	10:24:47	0.019	0.019
7-Dec-2015	10:28:47	0.022	0.021
7-Dec-2015	10:32:47	0.023	0.020
7-Dec-2015	10:36:47	0.016	0.017
7-Dec-2015	10:40:47	0.012	0.014
7-Dec-2015	10:44:47	0.013	0.013
7-Dec-2015	10:48:47	0.014	0.013
7-Dec-2015	10:52:47	0.013	0.014
7-Dec-2015	10:56:47	0.015	0.015
7-Dec-2015	11:00:47	0.018	0.015
7-Dec-2015	11:04:47	0.013	0.016
7-Dec-2015	11:08:47	0.016	0.020
7-Dec-2015	11:12:47	0.030	0.023
7-Dec-2015	11:16:47	0.022	0.024
7-Dec-2015	11:20:47	0.021	0.049
7-Dec-2015	11:24:47	0.103	0.050
7-Dec-2015	11:28:47	0.027	0.048
7-Dec-2015	11:32:47	0.014	0.029
7-Dec-2015	11:36:47	0.045	0.025
7-Dec-2015	11:40:47	0.015	0.049
7-Dec-2015	11:44:47	0.088	0.040
7-Dec-2015	11:48:47	0.017	0.039
7-Dec-2015	11:52:47	0.013	0.014
7-Dec-2015	11:56:47	0.013	0.013
7-Dec-2015	12:00:47	0.013	0.013
7-Dec-2015	12:04:47	0.012	0.013
7-Dec-2015	12:08:47	0.014	0.013
7-Dec-2015	12:12:47	0.012	0.013
7-Dec-2015	12:16:47	0.012	0.020

DUST MONITORING

December 2015

shading indicates values over the threshold

Monitor: 3

Threshold: 0.15 (mg/m^3)

Date	Time	Value (mg/m^3)	TWA (mg/m^3)
7-Dec-2015	12:20:47	0.036	0.029
7-Dec-2015	12:24:47	0.038	0.029
7-Dec-2015	12:28:47	0.012	0.021
7-Dec-2015	12:32:47	0.012	0.012
7-Dec-2015	12:36:47	0.013	0.016
7-Dec-2015	12:40:47	0.023	0.019
7-Dec-2015	12:44:47	0.021	0.018
7-Dec-2015	12:48:47	0.011	0.014
7-Dec-2015	12:52:47	0.010	0.015
7-Dec-2015	12:56:47	0.023	0.015
7-Dec-2015	13:00:47	0.011	0.020
7-Dec-2015	13:04:47	0.026	0.016
7-Dec-2015	13:08:47	0.010	0.023
7-Dec-2015	13:12:47	0.032	0.024
7-Dec-2015	13:16:47	0.030	0.031
7-Dec-2015	13:20:47	0.030	0.027
7-Dec-2015	13:24:47	0.020	0.023
7-Dec-2015	13:28:47	0.020	0.019
7-Dec-2015	13:32:47	0.018	0.016
7-Dec-2015	13:36:47	0.011	0.015
7-Dec-2015	13:40:47	0.016	0.017
7-Dec-2015	13:44:47	0.024	0.018
7-Dec-2015	13:48:47	0.013	0.017
7-Dec-2015	13:52:47	0.014	0.013
7-Dec-2015	13:56:47	0.013	0.016
7-Dec-2015	14:00:47	0.022	0.023
7-Dec-2015	14:04:47	0.035	0.028
7-Dec-2015	14:08:47	0.027	0.025
7-Dec-2015	14:12:47	0.012	0.020
7-Dec-2015	14:16:47	0.021	0.034
7-Dec-2015	14:20:47	0.070	0.072
7-Dec-2015	14:24:47	0.126	0.078
7-Dec-2015	14:28:47	0.038	0.059
7-Dec-2015	14:32:47	0.014	0.022
7-Dec-2015	14:36:47	0.014	0.015
7-Dec-2015	14:40:47	0.016	0.015
7-Dec-2015	14:44:47	0.014	0.015
7-Dec-2015	14:48:47	0.015	0.016
7-Dec-2015	14:52:47	0.018	0.017
7-Dec-2015	14:56:47	0.019	0.020
7-Dec-2015	15:00:47	0.024	0.020

DUST MONITORING

December 2015

shading indicates values over the threshold

Monitor: 3

Threshold: 0.15 (mg/m^3)

Date	Time	Value (mg/m^3)	TWA (mg/m^3)
7-Dec-2015	15:04:47	0.017	0.023
7-Dec-2015	15:08:47	0.028	0.022
7-Dec-2015	15:12:47	0.021	0.043
7-Dec-2015	15:16:47	0.080	0.096
7-Dec-2015	15:20:47	0.187	0.108
7-Dec-2015	15:24:47	0.056	0.086
7-Dec-2015	15:28:47	0.015	0.030
7-Dec-2015	15:32:47	0.020	0.020
7-Dec-2015	15:36:47	0.025	0.024
7-Dec-2015	15:40:47	0.028	0.023
7-Dec-2015	15:44:47	0.017	0.024
7-Dec-2015	15:48:47	0.028	0.021
7-Dec-2015	15:52:47	0.019	0.023
7-Dec-2015	15:56:47	0.021	0.019
7-Dec-2015	16:00:47	0.016	0.018
7-Dec-2015	16:04:47	0.018	0.017
7-Dec-2015	16:08:47	0.016	0.017
7-Dec-2015	16:12:47	0.016	0.056
7-Dec-2015	16:16:47	0.137	0.060
7-Dec-2015	16:20:47	0.026	0.067
7-Dec-2015	16:24:47	0.037	0.035
7-Dec-2015	16:28:47	0.042	0.039
7-Dec-2015	16:32:47	0.038	0.033
7-Dec-2015	16:36:47	0.018	0.025
7-Dec-2015	16:40:47	0.018	0.057
7-Dec-2015	16:44:47	0.134	0.057
7-Dec-2015	16:48:47	0.019	0.058
7-Dec-2015	16:52:47	0.021	0.021
7-Dec-2015	16:56:47	0.024	0.022
7-Dec-2015	17:00:47	0.022	0.022
7-Dec-2015	17:04:47	0.020	0.020
7-Dec-2015	17:08:47	0.019	0.020
8-Dec-2015	07:59:33	0.068	0.073
8-Dec-2015	08:03:33	0.077	0.074
8-Dec-2015	08:07:33	0.077	0.083
8-Dec-2015	08:11:33	0.094	0.091
8-Dec-2015	08:15:33	0.102	0.101
8-Dec-2015	08:19:33	0.107	0.101
8-Dec-2015	08:23:33	0.094	0.097
8-Dec-2015	08:27:33	0.089	0.094
8-Dec-2015	08:31:33	0.098	0.094

DUST MONITORING

December 2015

shading indicates values over the threshold

Monitor: 3

Threshold: 0.15 (mg/m^3)

Date	Time	Value (mg/m^3)	TWA (mg/m^3)
8-Dec-2015	08:35:33	0.096	0.094
8-Dec-2015	08:39:33	0.089	0.091
8-Dec-2015	08:43:33	0.089	0.088
8-Dec-2015	08:47:33	0.086	0.085
8-Dec-2015	08:51:33	0.079	0.079
8-Dec-2015	08:55:33	0.073	0.073
8-Dec-2015	08:59:33	0.067	0.070
8-Dec-2015	09:03:33	0.070	0.069
8-Dec-2015	09:07:33	0.071	0.069
8-Dec-2015	09:11:33	0.065	0.068
8-Dec-2015	09:15:33	0.069	0.065
8-Dec-2015	09:19:33	0.061	0.064
8-Dec-2015	09:23:33	0.062	0.062
8-Dec-2015	09:27:33	0.063	0.059
8-Dec-2015	09:31:33	0.053	0.058
8-Dec-2015	09:35:33	0.057	0.054
8-Dec-2015	09:39:33	0.051	0.053
8-Dec-2015	09:43:33	0.051	0.050
8-Dec-2015	09:47:33	0.049	0.049
8-Dec-2015	09:51:33	0.048	0.050
8-Dec-2015	09:55:33	0.053	0.050
8-Dec-2015	09:59:33	0.048	0.050
8-Dec-2015	10:03:33	0.049	0.047
8-Dec-2015	10:07:33	0.045	0.045
8-Dec-2015	10:11:33	0.042	0.047
8-Dec-2015	10:15:33	0.053	0.045
8-Dec-2015	10:19:33	0.040	0.043
8-Dec-2015	10:23:33	0.036	0.052
8-Dec-2015	10:27:33	0.079	0.056
8-Dec-2015	10:31:33	0.052	0.055
8-Dec-2015	10:35:33	0.033	0.040
8-Dec-2015	10:39:33	0.035	0.039
8-Dec-2015	10:43:33	0.050	0.042
8-Dec-2015	10:47:33	0.041	0.040
8-Dec-2015	10:51:33	0.030	0.033
8-Dec-2015	10:55:33	0.028	0.029
8-Dec-2015	10:59:33	0.030	0.028
8-Dec-2015	11:03:33	0.025	0.026
8-Dec-2015	11:07:33	0.023	0.024
8-Dec-2015	11:11:33	0.023	0.024
8-Dec-2015	11:15:33	0.026	0.029

DUST MONITORING

December 2015

shading indicates values over the threshold

Monitor: 3

Threshold: 0.15 (mg/m^3)

Date	Time	Value (mg/m^3)	TWA (mg/m^3)
8-Dec-2015	11:19:33	0.037	0.028
8-Dec-2015	11:23:33	0.022	0.027
8-Dec-2015	11:27:33	0.023	0.022
8-Dec-2015	11:31:33	0.021	0.024
8-Dec-2015	11:35:33	0.027	0.023
8-Dec-2015	11:39:33	0.021	0.024
8-Dec-2015	11:43:33	0.023	0.022
8-Dec-2015	11:47:33	0.022	0.023
8-Dec-2015	11:51:33	0.023	0.023
8-Dec-2015	11:55:33	0.023	0.025
8-Dec-2015	11:59:33	0.030	0.025
8-Dec-2015	12:03:33	0.023	0.025
8-Dec-2015	12:07:33	0.022	0.022
8-Dec-2015	12:11:33	0.022	0.022
8-Dec-2015	12:15:33	0.023	0.024
8-Dec-2015	12:19:33	0.026	0.025
8-Dec-2015	12:23:33	0.027	0.026
8-Dec-2015	12:27:33	0.024	0.025
8-Dec-2015	12:31:33	0.023	0.025
8-Dec-2015	12:35:33	0.029	0.090
8-Dec-2015	12:39:33	0.217	0.096
8-Dec-2015	12:43:33	0.043	0.098
8-Dec-2015	12:47:33	0.034	0.034
8-Dec-2015	12:51:33	0.025	0.027
8-Dec-2015	12:55:33	0.023	0.024
8-Dec-2015	12:59:33	0.024	0.024
8-Dec-2015	13:03:33	0.025	0.025
8-Dec-2015	13:07:33	0.026	0.025
8-Dec-2015	13:11:33	0.024	0.025
8-Dec-2015	13:15:33	0.026	0.025
8-Dec-2015	13:19:33	0.024	0.025
8-Dec-2015	13:23:33	0.025	0.028
8-Dec-2015	13:27:33	0.036	0.028
8-Dec-2015	13:31:33	0.022	0.027
8-Dec-2015	13:35:33	0.022	0.025
8-Dec-2015	13:39:33	0.030	0.036
8-Dec-2015	13:43:33	0.057	0.043
8-Dec-2015	13:47:33	0.041	0.041
8-Dec-2015	13:51:33	0.025	0.029
8-Dec-2015	13:55:33	0.022	0.025
8-Dec-2015	13:59:33	0.027	0.024

DUST MONITORING

December 2015

shading indicates values over the threshold

Monitor: 3

Threshold: 0.15 (mg/m^3)

Date	Time	Value (mg/m^3)	TWA (mg/m^3)
8-Dec-2015	14:03:33	0.024	0.025
8-Dec-2015	14:07:33	0.023	0.023
8-Dec-2015	14:11:33	0.022	0.022
8-Dec-2015	14:15:33	0.022	0.022
8-Dec-2015	14:19:33	0.022	0.022
8-Dec-2015	14:23:33	0.022	0.025
8-Dec-2015	14:27:33	0.030	0.026
8-Dec-2015	14:31:33	0.025	0.025
8-Dec-2015	14:35:33	0.019	0.021
8-Dec-2015	14:39:33	0.019	0.019
8-Dec-2015	14:43:33	0.020	0.019
8-Dec-2015	14:47:33	0.019	0.019
8-Dec-2015	14:51:33	0.019	0.022
8-Dec-2015	14:55:33	0.029	0.028
8-Dec-2015	14:59:33	0.037	0.028
8-Dec-2015	15:03:33	0.017	0.027
9-Dec-2015	09:49:51	0.038	0.033
9-Dec-2015	09:53:51	0.028	0.038
9-Dec-2015	09:57:51	0.048	0.037
9-Dec-2015	10:01:51	0.034	0.044
9-Dec-2015	10:05:51	0.049	0.040
9-Dec-2015	10:09:51	0.037	0.037
9-Dec-2015	10:13:51	0.026	0.045
9-Dec-2015	10:17:51	0.071	0.041
9-Dec-2015	10:21:51	0.027	0.042
9-Dec-2015	10:25:51	0.028	0.027
9-Dec-2015	10:29:51	0.027	0.035
9-Dec-2015	10:33:51	0.051	0.036
9-Dec-2015	10:37:51	0.029	0.055
9-Dec-2015	10:41:51	0.084	0.047
9-Dec-2015	10:45:51	0.029	0.067
9-Dec-2015	10:49:51	0.089	0.056
9-Dec-2015	10:53:51	0.049	0.055
9-Dec-2015	10:57:51	0.026	0.035
9-Dec-2015	11:01:51	0.031	0.027
9-Dec-2015	11:05:51	0.025	0.028
9-Dec-2015	11:09:51	0.029	0.026
9-Dec-2015	11:13:51	0.023	0.026
9-Dec-2015	11:17:51	0.027	0.025
9-Dec-2015	11:21:51	0.024	0.023
9-Dec-2015	11:25:51	0.019	0.025

DUST MONITORING

December 2015

shading indicates values over the threshold

Monitor: 3

Threshold: 0.15 (mg/m^3)

Date	Time	Value (mg/m^3)	TWA (mg/m^3)
9-Dec-2015	11:29:51	0.031	0.023
9-Dec-2015	11:33:51	0.019	0.027
9-Dec-2015	11:37:51	0.030	0.026
9-Dec-2015	11:41:51	0.030	0.028
9-Dec-2015	11:45:51	0.023	0.026
9-Dec-2015	11:49:51	0.024	0.024
9-Dec-2015	11:53:51	0.025	0.025
9-Dec-2015	11:57:51	0.026	0.026
9-Dec-2015	12:01:51	0.026	0.026
9-Dec-2015	12:05:51	0.027	0.027
9-Dec-2015	12:09:51	0.029	0.028
9-Dec-2015	12:13:51	0.028	0.028
9-Dec-2015	12:17:51	0.028	0.028
9-Dec-2015	12:21:51	0.028	0.028
9-Dec-2015	12:25:51	0.027	0.027
9-Dec-2015	12:29:51	0.026	0.027
9-Dec-2015	12:33:51	0.028	0.027
9-Dec-2015	12:37:51	0.027	0.032
9-Dec-2015	12:41:51	0.040	0.034
9-Dec-2015	12:45:51	0.035	0.039
9-Dec-2015	12:49:51	0.041	0.040
9-Dec-2015	12:53:51	0.045	0.036
9-Dec-2015	12:57:51	0.023	0.031
9-Dec-2015	13:01:51	0.026	0.025
9-Dec-2015	13:05:51	0.026	0.037
9-Dec-2015	13:09:51	0.058	0.049
9-Dec-2015	13:13:51	0.063	0.054
9-Dec-2015	13:17:51	0.042	0.045
9-Dec-2015	13:21:51	0.031	0.033
9-Dec-2015	13:25:51	0.026	0.028
9-Dec-2015	13:29:51	0.028	0.036
9-Dec-2015	13:33:51	0.054	0.038
9-Dec-2015	13:37:51	0.032	0.038
9-Dec-2015	13:41:51	0.029	0.033
9-Dec-2015	13:45:51	0.037	0.036
9-Dec-2015	13:49:51	0.043	0.040
9-Dec-2015	13:53:51	0.040	0.039
9-Dec-2015	13:57:51	0.033	0.034
9-Dec-2015	14:01:51	0.029	0.030
9-Dec-2015	14:05:51	0.029	0.029
9-Dec-2015	14:09:51	0.028	0.028

DUST MONITORING

December 2015

shading indicates values over the threshold

Monitor: 3

Threshold: 0.15 (mg/m^3)

Date	Time	Value (mg/m^3)	TWA (mg/m^3)
9-Dec-2015	14:13:51	0.028	0.037
9-Dec-2015	14:17:51	0.055	0.038
9-Dec-2015	14:21:51	0.031	0.043
9-Dec-2015	14:25:51	0.043	0.038
9-Dec-2015	14:29:51	0.039	0.051
9-Dec-2015	14:33:51	0.070	0.075
9-Dec-2015	14:37:51	0.115	0.076
9-Dec-2015	14:41:51	0.042	0.062
9-Dec-2015	14:45:51	0.030	0.034
9-Dec-2015	14:49:51	0.031	0.030
9-Dec-2015	14:53:51	0.029	0.031
9-Dec-2015	14:57:51	0.034	0.034
9-Dec-2015	15:01:51	0.040	0.035
9-Dec-2015	15:05:51	0.032	0.034
9-Dec-2015	15:09:51	0.030	0.066
9-Dec-2015	15:13:51	0.135	0.081
9-Dec-2015	15:17:51	0.077	0.088
9-Dec-2015	15:21:51	0.052	0.054
9-Dec-2015	15:25:51	0.033	0.039
9-Dec-2015	15:29:51	0.033	0.056
9-Dec-2015	15:33:51	0.102	0.094
9-Dec-2015	15:37:51	0.146	0.098
9-Dec-2015	15:41:51	0.047	0.079
9-Dec-2015	15:45:51	0.043	0.048
9-Dec-2015	15:49:51	0.054	0.057
9-Dec-2015	15:53:51	0.073	0.054
9-Dec-2015	15:57:51	0.034	0.047
9-Dec-2015	16:01:51	0.033	0.072
9-Dec-2015	16:05:51	0.148	0.071
9-Dec-2015	16:09:51	0.033	0.072
9-Dec-2015	16:13:51	0.034	0.041
9-Dec-2015	16:17:51	0.057	0.054
9-Dec-2015	16:21:51	0.071	0.054
9-Dec-2015	16:25:51	0.033	0.060
9-Dec-2015	16:29:51	0.075	0.070
9-Dec-2015	16:33:51	0.101	0.073
9-Dec-2015	16:37:51	0.042	0.059
9-Dec-2015	16:41:51	0.034	0.037
9-Dec-2015	16:45:51	0.036	0.039
9-Dec-2015	16:49:51	0.046	0.038
9-Dec-2015	16:53:51	0.033	0.040

DUST MONITORING

December 2015

shading indicates values over the threshold

Monitor: 3

Threshold: 0.15 (mg/m^3)

Date	Time	Value (mg/m^3)	TWA (mg/m^3)
10-Dec-2015	08:41:44	0.034	0.033
10-Dec-2015	08:45:44	0.032	0.033
10-Dec-2015	08:49:44	0.032	0.034
10-Dec-2015	08:53:44	0.038	0.038
10-Dec-2015	08:57:44	0.043	0.042
10-Dec-2015	09:01:44	0.044	0.043
10-Dec-2015	09:05:44	0.042	0.040
10-Dec-2015	09:09:44	0.033	0.038
10-Dec-2015	09:13:44	0.038	0.038
10-Dec-2015	09:17:44	0.043	0.039
10-Dec-2015	09:21:44	0.037	0.039
10-Dec-2015	09:25:44	0.036	0.037
10-Dec-2015	09:29:44	0.039	0.037
10-Dec-2015	09:33:44	0.037	0.038
10-Dec-2015	09:37:44	0.037	0.037
10-Dec-2015	09:41:44	0.036	0.036
10-Dec-2015	09:45:44	0.035	0.037
10-Dec-2015	09:49:44	0.040	0.038
10-Dec-2015	09:53:44	0.040	0.039
10-Dec-2015	09:57:44	0.038	0.039
10-Dec-2015	10:01:44	0.038	0.038
10-Dec-2015	10:05:44	0.037	0.036
10-Dec-2015	10:09:44	0.033	0.034
10-Dec-2015	10:13:44	0.033	0.033
10-Dec-2015	10:17:44	0.033	0.033
10-Dec-2015	10:21:44	0.034	0.034
10-Dec-2015	10:25:44	0.035	0.033
10-Dec-2015	10:29:44	0.030	0.031
10-Dec-2015	10:33:44	0.029	0.030
10-Dec-2015	10:37:44	0.031	0.030
10-Dec-2015	10:41:44	0.031	0.030
10-Dec-2015	10:45:44	0.029	0.029
10-Dec-2015	10:49:44	0.028	0.028
10-Dec-2015	10:53:44	0.028	0.027
10-Dec-2015	10:57:44	0.026	0.027
10-Dec-2015	11:01:44	0.027	0.027
10-Dec-2015	11:05:44	0.028	0.027
10-Dec-2015	11:09:44	0.025	0.025
10-Dec-2015	11:13:44	0.022	0.022
10-Dec-2015	11:17:44	0.019	0.021
10-Dec-2015	11:21:44	0.021	0.020

DUST MONITORING

December 2015

shading indicates values over the threshold

Monitor: 3

Threshold: 0.15 (mg/m^3)

Date	Time	Value (mg/m^3)	TWA (mg/m^3)
10-Dec-2015	11:25:44	0.019	0.022
10-Dec-2015	11:29:44	0.025	0.021
10-Dec-2015	11:33:44	0.018	0.021
10-Dec-2015	11:37:44	0.021	0.020
10-Dec-2015	11:41:44	0.021	0.021
10-Dec-2015	11:45:44	0.021	0.022
10-Dec-2015	11:49:44	0.025	0.022
10-Dec-2015	11:53:44	0.019	0.021
10-Dec-2015	11:57:44	0.020	0.022
10-Dec-2015	12:01:44	0.028	0.023
10-Dec-2015	12:05:44	0.020	0.024
10-Dec-2015	12:09:44	0.024	0.021
10-Dec-2015	12:13:44	0.020	0.022
10-Dec-2015	12:17:44	0.023	0.021
10-Dec-2015	12:21:44	0.021	0.021
10-Dec-2015	12:25:44	0.020	0.024
10-Dec-2015	12:29:44	0.031	0.027
10-Dec-2015	12:33:44	0.031	0.029
10-Dec-2015	12:37:44	0.024	0.025
10-Dec-2015	12:41:44	0.019	0.021
10-Dec-2015	12:45:44	0.019	0.019
10-Dec-2015	12:49:44	0.019	0.019
10-Dec-2015	12:53:44	0.019	0.019
10-Dec-2015	12:57:44	0.020	0.019
10-Dec-2015	13:01:44	0.018	0.019
10-Dec-2015	13:05:44	0.020	0.019
10-Dec-2015	13:09:44	0.019	0.019
10-Dec-2015	13:13:44	0.018	0.019
10-Dec-2015	13:17:44	0.019	0.021
10-Dec-2015	13:21:44	0.025	0.022
10-Dec-2015	13:25:44	0.021	0.023
10-Dec-2015	13:29:44	0.024	0.021
10-Dec-2015	13:33:44	0.019	0.022
10-Dec-2015	13:37:44	0.022	0.020
10-Dec-2015	13:41:44	0.018	0.019
10-Dec-2015	13:45:44	0.017	0.018
10-Dec-2015	13:49:44	0.018	0.019
10-Dec-2015	13:53:44	0.023	0.023
10-Dec-2015	13:57:44	0.029	0.028
10-Dec-2015	14:01:44	0.031	0.034
10-Dec-2015	14:05:44	0.042	0.031

DUST MONITORING

December 2015

shading indicates values over the threshold

Monitor: 3

Threshold: 0.15 (mg/m^3)

Date	Time	Value (mg/m^3)	TWA (mg/m^3)
10-Dec-2015	14:09:44	0.021	0.027
10-Dec-2015	14:13:44	0.019	0.021
10-Dec-2015	14:17:44	0.022	0.021
10-Dec-2015	14:21:44	0.022	0.020
10-Dec-2015	14:25:44	0.017	0.020
10-Dec-2015	14:29:44	0.021	0.020
10-Dec-2015	14:33:44	0.023	0.026
10-Dec-2015	14:37:44	0.034	0.026
10-Dec-2015	14:41:44	0.020	0.025
10-Dec-2015	14:45:44	0.020	0.020
10-Dec-2015	14:49:44	0.020	0.020
10-Dec-2015	14:53:44	0.021	0.020
10-Dec-2015	14:57:44	0.020	0.021
10-Dec-2015	15:01:44	0.021	0.022
10-Dec-2015	15:05:44	0.025	0.022
10-Dec-2015	15:09:44	0.021	0.022
10-Dec-2015	15:13:44	0.020	0.020
10-Dec-2015	15:17:44	0.019	0.019
10-Dec-2015	15:21:44	0.019	0.023
10-Dec-2015	15:25:44	0.030	0.024
10-Dec-2015	15:29:44	0.024	0.027
11-Dec-2015	11:23:59	0.020	0.020
11-Dec-2015	11:27:59	0.020	0.020
11-Dec-2015	11:31:59	0.021	0.021
11-Dec-2015	11:35:59	0.021	0.021
11-Dec-2015	11:39:59	0.022	0.022
11-Dec-2015	11:43:59	0.022	0.022
11-Dec-2015	11:47:59	0.021	0.021
11-Dec-2015	11:51:59	0.021	0.021
11-Dec-2015	11:55:59	0.022	0.021
11-Dec-2015	11:59:59	0.021	0.022
15-Dec-2015	08:54:35	0.028	0.024
15-Dec-2015	08:58:35	0.019	0.022
15-Dec-2015	09:02:35	0.020	0.020
15-Dec-2015	09:06:35	0.021	0.021
15-Dec-2015	09:10:35	0.021	0.021
15-Dec-2015	09:14:35	0.020	0.021
15-Dec-2015	09:18:35	0.021	0.021
15-Dec-2015	09:22:35	0.023	0.023
15-Dec-2015	09:26:35	0.024	0.022
15-Dec-2015	09:30:35	0.019	0.021

DUST MONITORING

December 2015

shading indicates values over the threshold

Monitor: 3

Threshold: 0.15 (mg/m^3)

Date	Time	Value (mg/m^3)	TWA (mg/m^3)
15-Dec-2015	09:34:35	0.019	0.017
15-Dec-2015	09:38:35	0.014	0.015
15-Dec-2015	09:42:35	0.011	0.012
15-Dec-2015	09:46:35	0.012	0.011
15-Dec-2015	09:50:35	0.011	0.011
15-Dec-2015	09:54:35	0.011	0.011
15-Dec-2015	09:58:35	0.012	0.012
15-Dec-2015	10:02:35	0.012	0.012
15-Dec-2015	10:06:35	0.011	0.012
15-Dec-2015	10:10:35	0.012	0.012
15-Dec-2015	10:14:35	0.013	0.013
15-Dec-2015	10:18:35	0.013	0.013
15-Dec-2015	10:22:35	0.013	0.013
15-Dec-2015	10:26:35	0.012	0.013
15-Dec-2015	10:30:35	0.014	0.013
15-Dec-2015	10:34:35	0.012	0.012
15-Dec-2015	10:38:35	0.011	0.011
15-Dec-2015	10:42:35	0.011	0.011
15-Dec-2015	10:46:35	0.012	0.012
15-Dec-2015	10:50:35	0.012	0.012
15-Dec-2015	10:54:35	0.012	0.013
15-Dec-2015	10:58:35	0.014	0.013
15-Dec-2015	11:02:35	0.013	0.013
15-Dec-2015	11:06:35	0.012	0.012
15-Dec-2015	11:10:35	0.012	0.011
15-Dec-2015	11:14:35	0.010	0.010
15-Dec-2015	11:18:35	0.009	0.010
15-Dec-2015	11:22:35	0.012	0.011
15-Dec-2015	11:26:35	0.013	0.013
15-Dec-2015	11:30:35	0.014	0.013
15-Dec-2015	11:34:35	0.013	0.014
15-Dec-2015	11:38:35	0.014	0.014
15-Dec-2015	11:42:35	0.014	0.015
15-Dec-2015	11:46:35	0.016	0.014
15-Dec-2015	11:50:35	0.013	0.014
15-Dec-2015	11:54:35	0.013	0.013
15-Dec-2015	11:58:35	0.013	0.013
15-Dec-2015	12:02:35	0.014	0.014
15-Dec-2015	12:06:35	0.015	0.014
15-Dec-2015	12:10:35	0.014	0.014
15-Dec-2015	12:14:35	0.013	0.013

DUST MONITORING

December 2015

shading indicates values over the threshold

Monitor: 3

Threshold: 0.15 (mg/m^3)

Date	Time	Value (mg/m^3)	TWA (mg/m^3)
15-Dec-2015	12:18:35	0.012	0.012
15-Dec-2015	12:22:35	0.011	0.011
15-Dec-2015	12:26:35	0.011	0.012
15-Dec-2015	12:30:35	0.013	0.012
15-Dec-2015	12:34:35	0.013	0.013
15-Dec-2015	12:38:35	0.014	0.014
15-Dec-2015	12:42:35	0.014	0.014
15-Dec-2015	12:46:35	0.015	0.015
15-Dec-2015	12:50:35	0.015	0.015
15-Dec-2015	12:54:35	0.014	0.014
15-Dec-2015	12:58:35	0.014	0.014
15-Dec-2015	13:02:35	0.015	0.014
15-Dec-2015	13:06:35	0.014	0.014
15-Dec-2015	13:10:35	0.012	0.012
15-Dec-2015	13:14:35	0.011	0.011
15-Dec-2015	13:18:35	0.010	0.011
15-Dec-2015	13:22:35	0.012	0.012
15-Dec-2015	13:26:35	0.014	0.013
15-Dec-2015	13:30:35	0.014	0.014
15-Dec-2015	13:34:35	0.014	0.014
15-Dec-2015	13:38:35	0.015	0.015
15-Dec-2015	13:42:35	0.015	0.015
15-Dec-2015	13:46:35	0.014	0.014
15-Dec-2015	13:50:35	0.014	0.014
15-Dec-2015	13:54:35	0.015	0.015
15-Dec-2015	13:58:35	0.015	0.016
15-Dec-2015	14:02:35	0.017	0.016
15-Dec-2015	14:06:35	0.016	0.016
15-Dec-2015	14:10:35	0.015	0.016
15-Dec-2015	14:14:35	0.018	0.017
15-Dec-2015	14:18:35	0.017	0.017
15-Dec-2015	14:22:35	0.016	0.017
15-Dec-2015	14:26:35	0.017	0.017
15-Dec-2015	14:30:35	0.017	0.017
15-Dec-2015	14:34:35	0.016	0.017
15-Dec-2015	14:38:35	0.018	0.017
15-Dec-2015	14:42:35	0.016	0.016
15-Dec-2015	14:46:35	0.015	0.015
15-Dec-2015	14:50:35	0.015	0.016
15-Dec-2015	14:54:35	0.018	0.016
15-Dec-2015	14:58:35	0.015	0.016

DUST MONITORING

December 2015

shading indicates values over the threshold

Monitor: 3

Threshold: 0.15 (mg/m^3)

Date	Time	Value (mg/m^3)	TWA (mg/m^3)
15-Dec-2015	15:02:35	0.016	0.015
15-Dec-2015	15:06:35	0.015	0.015
15-Dec-2015	15:10:35	0.015	0.015
15-Dec-2015	15:14:35	0.016	0.015
15-Dec-2015	15:18:35	0.015	0.015
15-Dec-2015	15:22:35	0.014	0.014
15-Dec-2015	15:26:35	0.014	0.014
15-Dec-2015	15:30:35	0.013	0.014
15-Dec-2015	15:34:35	0.014	0.014
15-Dec-2015	15:38:35	0.014	0.014
15-Dec-2015	15:42:35	0.014	0.014
15-Dec-2015	15:46:35	0.015	0.014
15-Dec-2015	15:50:35	0.014	0.015
15-Dec-2015	15:54:35	0.016	0.017
15-Dec-2015	15:58:35	0.020	0.018
15-Dec-2015	16:02:35	0.019	0.019
15-Dec-2015	16:06:35	0.018	0.018
15-Dec-2015	16:10:35	0.017	0.018
15-Dec-2015	16:14:35	0.018	0.017
15-Dec-2015	16:18:35	0.017	0.017
15-Dec-2015	16:22:35	0.016	0.016
15-Dec-2015	16:26:35	0.015	0.015
15-Dec-2015	16:30:35	0.015	0.015
15-Dec-2015	16:34:35	0.016	0.015
15-Dec-2015	16:38:35	0.014	0.015
15-Dec-2015	16:42:35	0.015	0.015
15-Dec-2015	16:46:35	0.015	0.015
15-Dec-2015	16:50:35	0.015	0.015
15-Dec-2015	16:54:35	0.014	0.015
15-Dec-2015	16:58:35	0.015	0.015
15-Dec-2015	17:02:35	0.016	0.016
15-Dec-2015	17:06:35	0.018	0.017
15-Dec-2015	17:10:35	0.017	0.017
15-Dec-2015	17:14:35	0.017	0.017
15-Dec-2015	17:18:35	0.017	0.017

DUST MONITORING

January 2016

shading indicates values over the threshold

Monitor: 1

Threshold: 0.15 (mg/m^3)

Date	Time	Value (mg/m^3)	TWA (mg/m^3)
5-Jan-2016	09:23:16	0.005	0.006
5-Jan-2016	09:27:16	0.006	0.005
5-Jan-2016	09:31:16	0.003	0.004
5-Jan-2016	09:35:16	0.003	0.003
5-Jan-2016	09:39:16	0.003	0.002
5-Jan-2016	09:43:16	0.001	0.002
5-Jan-2016	09:47:16	0.001	0.001
5-Jan-2016	09:51:16	0.000	0.001
5-Jan-2016	09:55:16	0.001	0.000
5-Jan-2016	09:59:16	0.000	0.000
5-Jan-2016	10:03:16	0.000	0.000
5-Jan-2016	10:07:16	0.000	0.000
5-Jan-2016	10:11:16	0.001	0.001
5-Jan-2016	10:15:16	0.001	0.001
5-Jan-2016	10:19:16	0.001	0.001
5-Jan-2016	10:23:16	0.001	0.001
5-Jan-2016	10:27:16	0.000	0.000
5-Jan-2016	10:31:16	0.000	0.000
5-Jan-2016	10:35:16	0.000	0.000
5-Jan-2016	10:39:16	0.000	0.000
5-Jan-2016	10:43:16	0.000	0.000
5-Jan-2016	10:47:16	0.000	0.000
5-Jan-2016	10:51:16	0.000	0.000
5-Jan-2016	10:55:16	0.001	0.001
5-Jan-2016	10:59:16	0.001	0.001
5-Jan-2016	11:03:16	0.000	0.000
5-Jan-2016	11:07:16	0.000	0.000
5-Jan-2016	11:11:16	0.000	0.000
5-Jan-2016	11:15:16	0.000	0.001
5-Jan-2016	11:19:16	0.002	0.001
5-Jan-2016	11:23:16	0.001	0.001
5-Jan-2016	11:27:16	0.000	0.001
5-Jan-2016	11:31:16	0.001	0.001
5-Jan-2016	11:35:16	0.003	0.002
5-Jan-2016	11:39:16	0.001	0.002
5-Jan-2016	11:43:16	0.001	0.001
5-Jan-2016	11:47:16	0.001	0.001
5-Jan-2016	11:51:16	0.000	0.001
5-Jan-2016	11:55:16	0.001	0.001
5-Jan-2016	11:59:16	0.001	0.001
5-Jan-2016	12:03:16	0.002	0.001

DUST MONITORING

January 2016

shading indicates values over the threshold

Monitor: 1

Threshold: 0.15 (mg/m^3)

Date	Time	Value (mg/m^3)	TWA (mg/m^3)
5-Jan-2016	12:07:16	0.001	0.001
5-Jan-2016	12:11:16	0.000	0.001
5-Jan-2016	12:15:16	0.001	0.001
5-Jan-2016	12:19:16	0.001	0.001
5-Jan-2016	12:23:16	0.001	0.002
5-Jan-2016	12:27:16	0.003	0.002
5-Jan-2016	12:31:16	0.003	0.004
5-Jan-2016	12:35:16	0.006	0.003
5-Jan-2016	12:39:16	0.001	0.003
5-Jan-2016	12:43:16	0.001	0.001
5-Jan-2016	12:47:16	0.001	0.001
5-Jan-2016	12:51:16	0.001	0.001
5-Jan-2016	12:55:16	0.001	0.001
5-Jan-2016	12:59:16	0.001	0.001
5-Jan-2016	13:03:16	0.001	0.001
5-Jan-2016	13:07:16	0.002	0.001
5-Jan-2016	13:11:16	0.001	0.002
5-Jan-2016	13:15:16	0.003	0.004
5-Jan-2016	13:19:16	0.009	0.005
5-Jan-2016	13:23:16	0.002	0.004
5-Jan-2016	13:27:16	0.002	0.002
5-Jan-2016	13:31:16	0.002	0.002
5-Jan-2016	13:35:16	0.001	0.002
5-Jan-2016	13:39:16	0.002	0.001
5-Jan-2016	13:43:16	0.001	0.003
5-Jan-2016	13:47:16	0.005	0.003
5-Jan-2016	13:51:16	0.002	0.003
5-Jan-2016	13:55:16	0.002	0.002
5-Jan-2016	13:59:16	0.002	0.002
5-Jan-2016	14:03:16	0.001	0.001
5-Jan-2016	14:07:16	0.001	0.001
5-Jan-2016	14:11:16	0.002	0.002
5-Jan-2016	14:15:16	0.002	0.002
5-Jan-2016	14:19:16	0.003	0.003
5-Jan-2016	14:23:16	0.004	0.003
5-Jan-2016	14:27:16	0.003	0.005
5-Jan-2016	14:31:16	0.007	0.005
5-Jan-2016	14:35:16	0.004	0.005
5-Jan-2016	14:39:16	0.004	0.004
5-Jan-2016	14:43:16	0.004	0.004
5-Jan-2016	14:47:16	0.003	0.004

DUST MONITORING

January 2016

shading indicates values over the threshold

Monitor: 1

Threshold: 0.15 (mg/m^3)

Date	Time	Value (mg/m^3)	TWA (mg/m^3)
5-Jan-2016	14:51:16	0.005	0.004
5-Jan-2016	14:55:16	0.004	0.005
5-Jan-2016	14:59:16	0.006	0.005
5-Jan-2016	15:03:16	0.004	0.005
5-Jan-2016	15:07:16	0.004	0.004
5-Jan-2016	15:11:16	0.004	0.004
5-Jan-2016	15:15:16	0.004	0.004
5-Jan-2016	15:19:16	0.005	0.007
5-Jan-2016	15:23:16	0.013	0.008
5-Jan-2016	15:27:16	0.005	0.010
5-Jan-2016	15:31:16	0.012	0.007
5-Jan-2016	15:35:16	0.005	0.007
5-Jan-2016	15:39:16	0.005	0.005
5-Jan-2016	15:43:16	0.005	0.005
5-Jan-2016	15:47:16	0.005	0.005
5-Jan-2016	15:51:16	0.006	0.006
5-Jan-2016	15:55:16	0.008	0.006
5-Jan-2016	15:59:16	0.005	0.006
5-Jan-2016	16:03:16	0.004	0.005
5-Jan-2016	16:07:16	0.005	0.005
5-Jan-2016	16:11:16	0.005	0.005
5-Jan-2016	16:15:16	0.004	0.006
5-Jan-2016	16:19:16	0.008	0.006
5-Jan-2016	16:23:16	0.007	0.008
5-Jan-2016	16:27:16	0.009	0.006
5-Jan-2016	16:31:16	0.003	0.005
5-Jan-2016	16:35:16	0.004	0.005
5-Jan-2016	16:39:16	0.008	0.008
5-Jan-2016	16:43:16	0.013	0.009
5-Jan-2016	16:47:16	0.006	0.008
5-Jan-2016	16:51:16	0.004	0.005
5-Jan-2016	16:55:16	0.005	0.006
5-Jan-2016	16:59:16	0.008	0.009
5-Jan-2016	17:03:16	0.014	0.008
5-Jan-2016	17:07:16	0.003	0.007
5-Jan-2016	17:11:16	0.003	0.003
5-Jan-2016	17:15:16	0.003	0.003
5-Jan-2016	17:19:16	0.002	0.003
6-Jan-2016	09:44:32	0.010	0.011
6-Jan-2016	09:48:32	0.011	0.011
6-Jan-2016	09:52:32	0.013	0.011

DUST MONITORING

January 2016

shading indicates values over the threshold

Monitor: 1

Threshold: 0.15 (mg/m^3)

Date	Time	Value (mg/m^3)	TWA (mg/m^3)
6-Jan-2016	09:56:32	0.010	0.013
6-Jan-2016	10:00:32	0.015	0.011
6-Jan-2016	10:04:32	0.008	0.011
6-Jan-2016	10:08:32	0.009	0.008
6-Jan-2016	10:12:32	0.008	0.011
6-Jan-2016	10:16:32	0.015	0.012
6-Jan-2016	10:20:32	0.012	0.014
6-Jan-2016	10:24:32	0.015	0.013
6-Jan-2016	10:28:32	0.011	0.012
6-Jan-2016	10:32:32	0.009	0.010
6-Jan-2016	10:36:32	0.010	0.010
6-Jan-2016	10:40:32	0.010	0.010
6-Jan-2016	10:44:32	0.010	0.010
6-Jan-2016	10:48:32	0.010	0.010
6-Jan-2016	10:52:32	0.010	0.010
6-Jan-2016	10:56:32	0.010	0.011
6-Jan-2016	11:00:32	0.012	0.015
6-Jan-2016	11:04:32	0.023	0.015
6-Jan-2016	11:08:32	0.010	0.017
6-Jan-2016	11:12:32	0.019	0.015
6-Jan-2016	11:16:32	0.017	0.015
6-Jan-2016	11:20:32	0.010	0.013
6-Jan-2016	11:24:32	0.011	0.010
6-Jan-2016	11:28:32	0.010	0.010
6-Jan-2016	11:32:32	0.010	0.010
6-Jan-2016	11:36:32	0.010	0.010
6-Jan-2016	11:40:32	0.011	0.011
6-Jan-2016	11:44:32	0.011	0.011
6-Jan-2016	11:48:32	0.011	0.011
6-Jan-2016	11:52:32	0.012	0.012
6-Jan-2016	11:56:32	0.012	0.012
6-Jan-2016	12:00:32	0.012	0.012
6-Jan-2016	12:04:32	0.012	0.012
6-Jan-2016	12:08:32	0.012	0.012
6-Jan-2016	12:12:32	0.012	0.012
6-Jan-2016	12:16:32	0.011	0.011
6-Jan-2016	12:20:32	0.011	0.011
6-Jan-2016	12:24:32	0.011	0.010
6-Jan-2016	12:28:32	0.009	0.010
6-Jan-2016	12:32:32	0.011	0.009
6-Jan-2016	12:36:32	0.008	0.010

DUST MONITORING

January 2016

shading indicates values over the threshold

Monitor: 1

Threshold: 0.15 (mg/m^3)

Date	Time	Value (mg/m^3)	TWA (mg/m^3)
6-Jan-2016	12:40:32	0.011	0.009
6-Jan-2016	12:44:32	0.009	0.010
6-Jan-2016	12:48:32	0.009	0.009
6-Jan-2016	12:52:32	0.010	0.010
6-Jan-2016	12:56:32	0.011	0.011
6-Jan-2016	13:00:32	0.012	0.011
6-Jan-2016	13:04:32	0.010	0.011
6-Jan-2016	13:08:32	0.010	0.011
6-Jan-2016	13:12:32	0.012	0.013
6-Jan-2016	13:16:32	0.016	0.013
6-Jan-2016	13:20:32	0.011	0.013
6-Jan-2016	13:24:32	0.011	0.011
6-Jan-2016	13:28:32	0.012	0.011
6-Jan-2016	13:32:32	0.010	0.011
6-Jan-2016	13:36:32	0.011	0.011
6-Jan-2016	13:40:32	0.011	0.011
6-Jan-2016	13:44:32	0.010	0.010
6-Jan-2016	13:48:32	0.009	0.009
6-Jan-2016	13:52:32	0.009	0.009
6-Jan-2016	13:56:32	0.008	0.009
6-Jan-2016	14:00:32	0.010	0.010
6-Jan-2016	14:04:32	0.012	0.012
6-Jan-2016	14:08:32	0.014	0.012
6-Jan-2016	14:12:32	0.011	0.011
6-Jan-2016	14:16:32	0.009	0.009
6-Jan-2016	14:20:32	0.007	0.008
6-Jan-2016	14:24:32	0.008	0.008
6-Jan-2016	14:28:32	0.009	0.008
6-Jan-2016	14:32:32	0.006	0.007
6-Jan-2016	14:36:32	0.006	0.006
6-Jan-2016	14:40:32	0.006	0.007
6-Jan-2016	14:44:32	0.008	0.007
6-Jan-2016	14:48:32	0.008	0.008
6-Jan-2016	14:52:32	0.007	0.008
6-Jan-2016	14:56:32	0.010	0.010
6-Jan-2016	15:00:32	0.013	0.010
6-Jan-2016	15:04:32	0.008	0.010
6-Jan-2016	15:08:32	0.009	0.012
6-Jan-2016	15:12:32	0.018	0.012
6-Jan-2016	15:16:32	0.010	0.016
6-Jan-2016	15:20:32	0.020	0.014

DUST MONITORING

January 2016

shading indicates values over the threshold

Monitor: 1

Threshold: 0.15 (mg/m^3)

Date	Time	Value (mg/m^3)	TWA (mg/m^3)
6-Jan-2016	15:24:32	0.011	0.015
6-Jan-2016	15:28:32	0.013	0.012
6-Jan-2016	15:32:32	0.011	0.012
11-Jan-2016	08:48:17	0.004	0.002
11-Jan-2016	08:52:17	0.000	0.001
11-Jan-2016	08:56:17	0.000	0.000
11-Jan-2016	09:00:17	0.001	0.000
11-Jan-2016	09:04:17	0.000	0.001
11-Jan-2016	09:08:17	0.002	0.003
11-Jan-2016	09:12:17	0.007	0.006
11-Jan-2016	09:16:17	0.009	0.007
11-Jan-2016	09:20:17	0.006	0.008
11-Jan-2016	09:24:17	0.010	0.008
11-Jan-2016	09:28:17	0.009	0.009
11-Jan-2016	09:32:17	0.008	0.007
11-Jan-2016	09:36:17	0.005	0.006
11-Jan-2016	09:40:17	0.004	0.005
11-Jan-2016	09:44:17	0.005	0.006
11-Jan-2016	09:48:17	0.010	0.008
11-Jan-2016	09:52:17	0.009	0.008
11-Jan-2016	09:56:17	0.005	0.006
11-Jan-2016	10:00:17	0.004	0.004
11-Jan-2016	10:04:17	0.003	0.005
11-Jan-2016	10:08:17	0.007	0.004
11-Jan-2016	10:12:17	0.002	0.003
11-Jan-2016	10:16:17	0.000	0.001
11-Jan-2016	10:20:17	0.000	0.000
11-Jan-2016	10:24:17	0.001	0.001
11-Jan-2016	10:28:17	0.002	0.001
11-Jan-2016	10:32:17	0.001	0.001
11-Jan-2016	10:36:17	0.001	0.001
11-Jan-2016	10:40:17	0.000	0.001
11-Jan-2016	10:44:17	0.001	0.001
11-Jan-2016	10:48:17	0.001	0.001
11-Jan-2016	10:52:17	0.001	0.001
11-Jan-2016	10:56:17	0.001	0.001
11-Jan-2016	11:00:17	0.000	0.001
11-Jan-2016	11:04:17	0.001	0.001
11-Jan-2016	11:08:17	0.001	0.001
11-Jan-2016	11:12:17	0.000	0.000
11-Jan-2016	11:16:17	0.000	0.000

DUST MONITORING

January 2016

shading indicates values over the threshold

Monitor: 1

Threshold: 0.15 (mg/m^3)

Date	Time	Value (mg/m^3)	TWA (mg/m^3)
11-Jan-2016	11:20:17	0.000	0.000
11-Jan-2016	11:24:17	0.000	0.000
11-Jan-2016	11:28:17	0.001	0.001
11-Jan-2016	11:32:17	0.001	0.002
11-Jan-2016	11:36:17	0.004	0.003
11-Jan-2016	11:40:17	0.003	0.003
11-Jan-2016	11:44:17	0.002	0.002
11-Jan-2016	11:48:17	0.001	0.001
11-Jan-2016	11:52:17	0.000	0.000
11-Jan-2016	11:56:17	0.000	0.001
11-Jan-2016	12:00:17	0.002	0.002
11-Jan-2016	12:04:17	0.005	0.003
11-Jan-2016	12:08:17	0.002	0.003
11-Jan-2016	12:12:17	0.003	0.002
11-Jan-2016	12:16:17	0.000	0.001
11-Jan-2016	12:20:17	0.001	0.000
11-Jan-2016	12:24:17	0.000	0.001
11-Jan-2016	12:28:17	0.001	0.000
11-Jan-2016	12:32:17	0.000	0.000
11-Jan-2016	12:36:17	0.000	0.000
11-Jan-2016	12:40:17	0.000	0.000
11-Jan-2016	12:44:17	0.001	0.001
11-Jan-2016	12:48:17	0.001	0.002
11-Jan-2016	12:52:17	0.003	0.002
11-Jan-2016	12:56:17	0.002	0.002
11-Jan-2016	13:00:17	0.001	0.002
11-Jan-2016	13:04:17	0.004	0.002
11-Jan-2016	13:08:17	0.001	0.002
11-Jan-2016	13:12:17	0.001	0.001
11-Jan-2016	13:16:17	0.000	0.000
11-Jan-2016	13:20:17	0.000	0.000
11-Jan-2016	13:24:17	0.000	0.000
11-Jan-2016	13:28:17	0.000	0.000
11-Jan-2016	13:32:17	0.000	0.000
11-Jan-2016	13:36:17	0.001	0.000
11-Jan-2016	13:40:17	0.000	0.000
11-Jan-2016	13:44:17	0.000	0.000
11-Jan-2016	13:48:17	0.000	0.000
11-Jan-2016	13:52:17	0.000	0.000
11-Jan-2016	13:56:17	0.001	0.000
11-Jan-2016	14:00:17	0.000	0.000

DUST MONITORING

January 2016

shading indicates values over the threshold

Monitor: 1

Threshold: 0.15 (mg/m^3)

Date	Time	Value (mg/m^3)	TWA (mg/m^3)
11-Jan-2016	14:04:17	0.000	0.000
11-Jan-2016	14:08:17	0.000	0.000
11-Jan-2016	14:12:17	0.000	0.000
11-Jan-2016	14:16:17	0.000	0.000
11-Jan-2016	14:20:17	0.001	0.000
11-Jan-2016	14:24:17	0.000	0.000
11-Jan-2016	14:28:17	0.000	0.000
11-Jan-2016	14:32:17	0.000	0.000
11-Jan-2016	14:36:17	0.000	0.000
11-Jan-2016	14:40:17	0.000	0.000
11-Jan-2016	14:44:17	0.000	0.000
11-Jan-2016	14:48:17	0.000	0.000
11-Jan-2016	14:52:17	0.000	0.000
11-Jan-2016	14:56:17	0.000	0.000
11-Jan-2016	15:00:17	0.000	0.000
11-Jan-2016	15:04:17	0.000	0.000
11-Jan-2016	15:08:17	0.000	0.000
11-Jan-2016	15:12:17	0.000	0.000
11-Jan-2016	15:16:17	0.001	0.000
11-Jan-2016	15:20:17	0.000	0.000
11-Jan-2016	15:24:17	0.000	0.000
11-Jan-2016	15:28:17	0.000	0.000
11-Jan-2016	15:32:17	0.000	0.000
11-Jan-2016	15:36:17	0.000	0.000
11-Jan-2016	15:40:17	0.001	0.000
11-Jan-2016	15:44:17	0.000	0.000
11-Jan-2016	15:48:17	0.000	0.000
11-Jan-2016	15:52:17	0.001	0.000
11-Jan-2016	15:56:17	0.000	0.000
11-Jan-2016	16:00:17	0.000	0.001
11-Jan-2016	16:04:17	0.002	0.001
11-Jan-2016	16:08:17	0.001	0.001
11-Jan-2016	16:12:17	0.000	0.000
11-Jan-2016	16:16:17	0.000	0.000
11-Jan-2016	16:20:17	0.000	0.000
11-Jan-2016	16:24:17	0.000	0.000
11-Jan-2016	16:28:17	0.000	0.000
11-Jan-2016	16:32:17	0.000	0.000
11-Jan-2016	16:36:17	0.000	0.000
11-Jan-2016	16:40:17	0.001	0.000
11-Jan-2016	16:44:17	0.000	0.000

DUST MONITORING

January 2016

shading indicates values over the threshold

Monitor: 1

Threshold: 0.15 (mg/m^3)

Date	Time	Value (mg/m^3)	TWA (mg/m^3)
11-Jan-2016	16:48:17	0.000	0.000
11-Jan-2016	16:52:17	0.000	0.000
11-Jan-2016	16:56:17	0.000	0.000
11-Jan-2016	17:00:17	0.000	0.000
11-Jan-2016	17:04:17	0.000	0.000
11-Jan-2016	17:08:17	0.000	0.000
12-Jan-2016	08:38:11	0.000	0.001
12-Jan-2016	08:42:11	0.002	0.001
12-Jan-2016	08:46:11	0.000	0.001
12-Jan-2016	08:50:11	0.001	0.001
12-Jan-2016	08:54:11	0.001	0.001
12-Jan-2016	08:58:11	0.000	0.001
12-Jan-2016	09:02:11	0.001	0.000
12-Jan-2016	09:06:11	0.000	0.001
12-Jan-2016	09:10:11	0.001	0.001
12-Jan-2016	09:14:11	0.001	0.001
12-Jan-2016	09:18:11	0.001	0.001
12-Jan-2016	09:22:11	0.001	0.001
12-Jan-2016	09:26:11	0.001	0.001
12-Jan-2016	09:30:11	0.001	0.001
12-Jan-2016	09:34:11	0.001	0.001
12-Jan-2016	09:38:11	0.001	0.001
12-Jan-2016	09:42:11	0.001	0.001
12-Jan-2016	09:46:11	0.001	0.001
12-Jan-2016	09:50:11	0.002	0.001
12-Jan-2016	09:54:11	0.001	0.001
12-Jan-2016	09:58:11	0.001	0.001
12-Jan-2016	10:02:11	0.001	0.001
12-Jan-2016	10:06:11	0.002	0.002
12-Jan-2016	10:10:11	0.002	0.002
12-Jan-2016	10:14:11	0.002	0.002
12-Jan-2016	10:18:11	0.002	0.002
12-Jan-2016	10:22:11	0.002	0.002
12-Jan-2016	10:26:11	0.002	0.002
12-Jan-2016	10:30:11	0.002	0.002
12-Jan-2016	10:34:11	0.002	0.002
12-Jan-2016	10:38:11	0.002	0.002
12-Jan-2016	10:42:11	0.002	0.002
12-Jan-2016	10:46:11	0.002	0.002
12-Jan-2016	10:50:11	0.002	0.002
12-Jan-2016	10:54:11	0.002	0.003

DUST MONITORING

January 2016

shading indicates values over the threshold

Monitor: 1

Threshold: 0.15 (mg/m^3)

Date	Time	Value (mg/m^3)	TWA (mg/m^3)
12-Jan-2016	10:58:11	0.004	0.003
12-Jan-2016	11:02:11	0.003	0.003
12-Jan-2016	11:06:11	0.003	0.004
12-Jan-2016	11:10:11	0.005	0.004
12-Jan-2016	11:14:11	0.003	0.004
12-Jan-2016	11:18:11	0.004	0.003
12-Jan-2016	11:22:11	0.003	0.003
12-Jan-2016	11:26:11	0.003	0.003
12-Jan-2016	11:30:11	0.003	0.003
12-Jan-2016	11:34:11	0.004	0.003
12-Jan-2016	11:38:11	0.003	0.004
12-Jan-2016	11:42:11	0.004	0.004
12-Jan-2016	11:46:11	0.005	0.004
12-Jan-2016	11:50:11	0.004	0.004
12-Jan-2016	11:54:11	0.003	0.004
12-Jan-2016	11:58:11	0.004	0.004
12-Jan-2016	12:02:11	0.006	0.005
12-Jan-2016	12:06:11	0.004	0.005
12-Jan-2016	12:10:11	0.004	0.004
12-Jan-2016	12:14:11	0.005	0.004
12-Jan-2016	12:18:11	0.003	0.004
12-Jan-2016	12:22:11	0.005	0.004
12-Jan-2016	12:26:11	0.005	0.005
12-Jan-2016	12:30:11	0.005	0.005
12-Jan-2016	12:34:11	0.004	0.005
12-Jan-2016	12:38:11	0.005	0.004
12-Jan-2016	12:42:11	0.004	0.004
12-Jan-2016	12:46:11	0.004	0.004
12-Jan-2016	12:50:11	0.005	0.005
12-Jan-2016	12:54:11	0.005	0.005
12-Jan-2016	12:58:11	0.005	0.005
12-Jan-2016	13:02:11	0.005	0.005
12-Jan-2016	13:06:11	0.006	0.005
12-Jan-2016	13:10:11	0.005	0.005
12-Jan-2016	13:14:11	0.005	0.005
12-Jan-2016	13:18:11	0.004	0.004
12-Jan-2016	13:22:11	0.004	0.004
12-Jan-2016	13:26:11	0.004	0.004
12-Jan-2016	13:30:11	0.005	0.004
12-Jan-2016	13:34:11	0.004	0.004
12-Jan-2016	13:38:11	0.004	0.005

DUST MONITORING

January 2016

shading indicates values over the threshold

Monitor: 1

Threshold: 0.15 (mg/m^3)

Date	Time	Value (mg/m^3)	TWA (mg/m^3)
12-Jan-2016	13:42:11	0.006	0.005
12-Jan-2016	13:46:11	0.006	0.005
12-Jan-2016	13:50:11	0.004	0.005
12-Jan-2016	13:54:11	0.004	0.004
12-Jan-2016	13:58:11	0.004	0.004
13-Jan-2016	09:33:22	0.020	0.020
13-Jan-2016	09:37:22	0.019	0.020
13-Jan-2016	09:41:22	0.022	0.022
13-Jan-2016	09:45:22	0.026	0.023
13-Jan-2016	09:49:22	0.020	0.021
13-Jan-2016	09:53:22	0.018	0.019
13-Jan-2016	09:57:22	0.019	0.019
13-Jan-2016	10:01:22	0.020	0.019
13-Jan-2016	10:05:22	0.019	0.019
13-Jan-2016	10:09:22	0.018	0.018
13-Jan-2016	10:13:22	0.017	0.017
13-Jan-2016	10:17:22	0.016	0.017
13-Jan-2016	10:21:22	0.017	0.016
13-Jan-2016	10:25:22	0.016	0.016
13-Jan-2016	10:29:22	0.016	0.016
13-Jan-2016	10:33:22	0.016	0.016
13-Jan-2016	10:37:22	0.015	0.015
13-Jan-2016	10:41:22	0.015	0.015
13-Jan-2016	10:45:22	0.016	0.015
13-Jan-2016	10:49:22	0.014	0.015
13-Jan-2016	10:53:22	0.015	0.015
13-Jan-2016	10:57:22	0.015	0.015
13-Jan-2016	11:01:22	0.016	0.016
13-Jan-2016	11:05:22	0.017	0.017
13-Jan-2016	11:09:22	0.017	0.017
13-Jan-2016	11:13:22	0.018	0.019
13-Jan-2016	11:17:22	0.022	0.020
13-Jan-2016	11:21:22	0.020	0.020
13-Jan-2016	11:25:22	0.018	0.019
13-Jan-2016	11:29:22	0.020	0.020
13-Jan-2016	11:33:22	0.022	0.022
13-Jan-2016	11:37:22	0.024	0.022
13-Jan-2016	11:41:22	0.020	0.021
13-Jan-2016	11:45:22	0.020	0.020
13-Jan-2016	11:49:22	0.019	0.019
13-Jan-2016	11:53:22	0.019	0.019

DUST MONITORING

January 2016

shading indicates values over the threshold

Monitor: 1

Threshold: 0.15 (mg/m^3)

Date	Time	Value (mg/m^3)	TWA (mg/m^3)
13-Jan-2016	11:57:22	0.020	0.019
13-Jan-2016	12:01:22	0.019	0.019
13-Jan-2016	12:05:22	0.019	0.019
13-Jan-2016	12:09:22	0.020	0.019
13-Jan-2016	12:13:22	0.019	0.020
13-Jan-2016	12:17:22	0.020	0.019
13-Jan-2016	12:21:22	0.019	0.019
13-Jan-2016	12:25:22	0.019	0.019
13-Jan-2016	12:29:22	0.019	0.019
13-Jan-2016	12:33:22	0.020	0.020
13-Jan-2016	12:37:22	0.020	0.020
13-Jan-2016	12:41:22	0.019	0.020
13-Jan-2016	12:45:22	0.020	0.019
13-Jan-2016	12:49:22	0.018	0.019
13-Jan-2016	12:53:22	0.018	0.018
13-Jan-2016	12:57:22	0.019	0.019
13-Jan-2016	13:01:22	0.020	0.020
13-Jan-2016	13:05:22	0.021	0.020
13-Jan-2016	13:09:22	0.020	0.020
13-Jan-2016	13:13:22	0.020	0.020
13-Jan-2016	13:17:22	0.020	0.021
13-Jan-2016	13:21:22	0.023	0.022
13-Jan-2016	13:25:22	0.022	0.022
13-Jan-2016	13:29:22	0.022	0.023
13-Jan-2016	13:33:22	0.024	0.023
13-Jan-2016	13:37:22	0.023	0.023
13-Jan-2016	13:41:22	0.023	0.023
13-Jan-2016	13:45:22	0.022	0.022
13-Jan-2016	13:49:22	0.021	0.022
13-Jan-2016	13:53:22	0.022	0.022
13-Jan-2016	13:57:22	0.022	0.022
13-Jan-2016	14:01:22	0.022	0.022
13-Jan-2016	14:05:22	0.021	0.022
13-Jan-2016	14:09:22	0.024	0.023
13-Jan-2016	14:13:22	0.024	0.024
13-Jan-2016	14:17:22	0.023	0.023
13-Jan-2016	14:21:22	0.022	0.023
13-Jan-2016	14:25:22	0.023	0.023
13-Jan-2016	14:29:22	0.023	0.023
13-Jan-2016	14:33:22	0.022	0.024
13-Jan-2016	14:37:22	0.027	0.024

DUST MONITORING

January 2016

shading indicates values over the threshold

Monitor: 1

Threshold: 0.15 (mg/m^3)

Date	Time	Value (mg/m^3)	TWA (mg/m^3)
13-Jan-2016	14:41:22	0.022	0.024
13-Jan-2016	14:45:22	0.023	0.024
13-Jan-2016	14:49:22	0.027	0.025
13-Jan-2016	14:53:22	0.026	0.025
13-Jan-2016	14:57:22	0.023	0.024
13-Jan-2016	15:01:22	0.023	0.024
13-Jan-2016	15:05:22	0.027	0.025
13-Jan-2016	15:09:22	0.024	0.025
13-Jan-2016	15:13:22	0.024	0.024
13-Jan-2016	15:17:22	0.025	0.024
13-Jan-2016	15:21:22	0.024	0.024
13-Jan-2016	15:25:22	0.024	0.024
13-Jan-2016	15:29:22	0.025	0.025
13-Jan-2016	15:33:22	0.026	0.025
13-Jan-2016	15:37:22	0.024	0.024
13-Jan-2016	15:41:22	0.023	0.023
13-Jan-2016	15:45:22	0.023	0.023
13-Jan-2016	15:49:22	0.024	0.023
13-Jan-2016	15:53:22	0.023	0.023
13-Jan-2016	15:57:22	0.023	0.023
13-Jan-2016	16:01:22	0.022	0.022
13-Jan-2016	16:05:22	0.022	0.022
13-Jan-2016	16:09:22	0.023	0.023
13-Jan-2016	16:13:22	0.023	0.023
13-Jan-2016	16:17:22	0.023	0.023
13-Jan-2016	16:21:22	0.023	0.023
13-Jan-2016	16:25:22	0.023	0.023
13-Jan-2016	16:29:22	0.023	0.023
13-Jan-2016	16:33:22	0.023	0.023
13-Jan-2016	16:37:22	0.023	0.023
13-Jan-2016	16:41:22	0.023	0.023
13-Jan-2016	16:45:22	0.024	0.023
13-Jan-2016	16:49:22	0.023	0.023
13-Jan-2016	16:53:22	0.023	0.023
13-Jan-2016	16:57:22	0.023	0.023
13-Jan-2016	17:01:22	0.023	0.023
13-Jan-2016	17:05:22	0.023	0.023
14-Jan-2016	14:48:02	0.001	0.001
14-Jan-2016	14:52:02	0.000	0.003
14-Jan-2016	14:56:02	0.008	0.003
14-Jan-2016	15:00:02	0.001	0.004

DUST MONITORING

January 2016

shading indicates values over the threshold

Monitor: 1

Threshold: 0.15 (mg/m^3)

Date	Time	Value (mg/m^3)	TWA (mg/m^3)
14-Jan-2016	15:04:02	0.002	0.002
14-Jan-2016	15:08:02	0.002	0.001
14-Jan-2016	15:12:02	0.000	0.001
14-Jan-2016	15:16:02	0.000	0.000
14-Jan-2016	15:20:02	0.000	0.000
14-Jan-2016	15:24:02	0.001	0.000
14-Jan-2016	15:28:02	0.000	0.000
14-Jan-2016	15:32:02	0.000	0.001
14-Jan-2016	15:36:02	0.002	0.001
14-Jan-2016	15:40:02	0.002	0.001
14-Jan-2016	15:44:02	0.000	0.001
14-Jan-2016	15:48:02	0.000	0.000
14-Jan-2016	15:52:02	0.000	0.001
14-Jan-2016	15:56:02	0.002	0.001
14-Jan-2016	16:00:02	0.000	0.001
14-Jan-2016	16:04:02	0.000	0.000
14-Jan-2016	16:08:02	0.000	0.000
14-Jan-2016	16:12:02	0.000	0.000
14-Jan-2016	16:16:02	0.000	0.000
14-Jan-2016	16:20:02	0.000	0.000
14-Jan-2016	16:24:02	0.000	0.000
18-Jan-2016	09:11:25	0.001	0.001
18-Jan-2016	09:15:25	0.000	0.000
18-Jan-2016	09:19:25	0.000	0.000
18-Jan-2016	09:23:25	0.000	0.000
18-Jan-2016	09:27:25	0.000	0.000
18-Jan-2016	09:31:25	0.000	0.000
18-Jan-2016	09:35:25	0.000	0.000
18-Jan-2016	09:39:25	0.000	0.000
19-Jan-2016	08:20:00	0.001	0.000
19-Jan-2016	08:24:00	0.001	0.000
19-Jan-2016	08:28:00	0.003	0.000
19-Jan-2016	08:32:00	0.001	0.000
19-Jan-2016	11:56:23	0.000	0.000
19-Jan-2016	12:00:23	0.000	0.000
19-Jan-2016	12:04:23	0.000	0.000
19-Jan-2016	12:08:23	0.000	0.000
19-Jan-2016	12:12:23	0.000	0.000
19-Jan-2016	12:16:23	0.000	0.000
19-Jan-2016	12:20:23	0.000	0.000
19-Jan-2016	13:36:21	0.000	0.000

DUST MONITORING

January 2016

shading indicates values over the threshold

Monitor: 1

Threshold: 0.15 (mg/m^3)

Date	Time	Value (mg/m^3)	TWA (mg/m^3)
19-Jan-2016	13:40:21	0.000	0.000
19-Jan-2016	13:44:21	0.000	0.000
19-Jan-2016	13:48:21	0.000	0.000
19-Jan-2016	13:52:21	0.000	0.000
19-Jan-2016	13:56:21	0.000	0.000
19-Jan-2016	14:00:21	0.000	0.000
19-Jan-2016	14:04:21	0.000	0.000
19-Jan-2016	14:08:21	0.000	0.000
19-Jan-2016	14:12:21	0.000	0.000
19-Jan-2016	14:16:21	0.000	0.000
19-Jan-2016	14:20:21	0.000	0.000
19-Jan-2016	14:24:21	0.000	0.000
19-Jan-2016	15:40:22	0.000	0.000
19-Jan-2016	15:44:22	0.000	0.000
19-Jan-2016	15:48:22	0.000	0.000
19-Jan-2016	15:52:22	0.000	0.000
25-Jan-2016	08:15:43	0.000	0.000
25-Jan-2016	08:19:43	0.000	0.000
25-Jan-2016	08:23:43	0.000	0.000
25-Jan-2016	08:27:43	0.000	0.000
25-Jan-2016	08:31:43	0.001	0.000
25-Jan-2016	08:35:43	0.000	0.000
25-Jan-2016	08:39:43	0.000	0.000
25-Jan-2016	08:43:43	0.001	0.000
25-Jan-2016	10:14:39	0.000	0.000
25-Jan-2016	10:18:39	0.000	0.000
25-Jan-2016	10:22:39	0.000	0.000
25-Jan-2016	10:26:39	0.000	0.000
25-Jan-2016	10:30:39	0.000	0.000
25-Jan-2016	10:34:39	0.000	0.000
25-Jan-2016	10:38:39	0.000	0.000
25-Jan-2016	10:42:39	0.000	0.000
25-Jan-2016	10:46:39	0.000	0.000
25-Jan-2016	10:50:39	0.000	0.000
25-Jan-2016	10:54:39	0.000	0.000
25-Jan-2016	10:58:39	0.000	0.000
25-Jan-2016	11:02:39	0.000	0.000
25-Jan-2016	11:06:39	0.000	0.000
25-Jan-2016	11:10:39	0.000	0.000
25-Jan-2016	11:14:39	0.000	0.000
25-Jan-2016	11:18:39	0.000	0.000

DUST MONITORING

January 2016

shading indicates values over the threshold

Monitor: 1

Threshold: 0.15 (mg/m^3)

Date	Time	Value (mg/m^3)	TWA (mg/m^3)
25-Jan-2016	11:22:39	0.000	0.000
25-Jan-2016	11:26:39	0.000	0.000
25-Jan-2016	11:30:39	0.000	0.000
25-Jan-2016	11:34:39	0.000	0.000
25-Jan-2016	11:38:39	0.000	0.000
25-Jan-2016	11:42:39	0.000	0.000
25-Jan-2016	11:46:39	0.000	0.000
25-Jan-2016	11:50:39	0.000	0.000
25-Jan-2016	11:54:39	0.000	0.000
25-Jan-2016	11:58:39	0.000	0.000
25-Jan-2016	12:02:39	0.000	0.000
25-Jan-2016	12:06:39	0.000	0.000
25-Jan-2016	12:10:39	0.000	0.000
25-Jan-2016	12:14:39	0.000	0.000
25-Jan-2016	12:18:39	0.000	0.000
25-Jan-2016	12:22:39	0.000	0.000
25-Jan-2016	12:26:39	0.000	0.000
25-Jan-2016	12:30:39	0.000	0.000
25-Jan-2016	12:34:39	0.000	0.000
25-Jan-2016	12:38:39	0.000	0.000
25-Jan-2016	12:42:39	0.000	0.000
25-Jan-2016	12:46:39	0.000	0.000
25-Jan-2016	12:50:39	0.000	0.000
25-Jan-2016	12:54:39	0.000	0.000
25-Jan-2016	12:58:39	0.000	0.000
25-Jan-2016	13:02:39	0.000	0.000
25-Jan-2016	13:06:39	0.000	0.000
25-Jan-2016	13:10:39	0.000	0.000
25-Jan-2016	13:14:39	0.000	0.000
25-Jan-2016	13:18:39	0.000	0.000
25-Jan-2016	13:22:39	0.000	0.000
25-Jan-2016	13:26:39	0.000	0.000
25-Jan-2016	13:30:39	0.000	0.000
25-Jan-2016	13:34:39	0.000	0.000
25-Jan-2016	13:38:39	0.000	0.000
25-Jan-2016	13:42:39	0.000	0.000
25-Jan-2016	13:46:39	0.000	0.000
25-Jan-2016	13:50:39	0.000	0.000
25-Jan-2016	13:54:39	0.000	0.000
25-Jan-2016	13:58:39	0.000	0.000
25-Jan-2016	14:02:39	0.000	0.000

DUST MONITORING

January 2016

shading indicates values over the threshold

Monitor: 1

Threshold: 0.15 (mg/m^3)

Date	Time	Value (mg/m^3)	TWA (mg/m^3)
25-Jan-2016	14:06:39	0.000	0.000
25-Jan-2016	14:10:39	0.000	0.000
25-Jan-2016	14:14:39	0.000	0.000
25-Jan-2016	14:18:39	0.000	0.000
25-Jan-2016	14:22:39	0.000	0.000
25-Jan-2016	14:26:39	0.000	0.000
25-Jan-2016	14:30:39	0.000	0.000
25-Jan-2016	14:34:39	0.000	0.000
25-Jan-2016	14:38:39	0.000	0.000
25-Jan-2016	14:42:39	0.000	0.000
25-Jan-2016	14:46:39	0.000	0.000
25-Jan-2016	14:50:39	0.000	0.000
25-Jan-2016	14:54:39	0.000	0.000
25-Jan-2016	14:58:39	0.000	0.000
25-Jan-2016	15:02:39	0.000	0.000
25-Jan-2016	15:06:39	0.000	0.000
25-Jan-2016	15:10:39	0.000	0.000
25-Jan-2016	15:14:39	0.000	0.000
25-Jan-2016	15:18:39	0.000	0.000
25-Jan-2016	15:22:39	0.000	0.000
25-Jan-2016	15:26:39	0.000	0.000
25-Jan-2016	15:30:39	0.000	0.000
25-Jan-2016	15:34:39	0.000	0.000
25-Jan-2016	15:38:39	0.000	0.000
25-Jan-2016	15:42:39	0.000	0.000
25-Jan-2016	15:46:39	0.000	0.000
25-Jan-2016	15:50:39	0.000	0.000
25-Jan-2016	15:54:39	0.000	0.000
25-Jan-2016	15:58:39	0.000	0.000
25-Jan-2016	16:02:39	0.000	0.000
25-Jan-2016	16:06:39	0.000	0.000
25-Jan-2016	16:10:39	0.000	0.000
25-Jan-2016	16:14:39	0.000	0.000
25-Jan-2016	16:18:39	0.000	0.000
25-Jan-2016	16:22:39	0.000	0.000
25-Jan-2016	16:26:39	0.000	0.000
25-Jan-2016	16:30:39	0.000	0.000
25-Jan-2016	16:34:39	0.000	0.000
25-Jan-2016	16:38:39	0.000	0.000
25-Jan-2016	16:42:39	0.000	0.000
25-Jan-2016	16:46:39	0.000	0.000

DUST MONITORING

January 2016

shading indicates values over the threshold

Monitor: 1

Threshold: 0.15 (mg/m^3)

Date	Time	Value (mg/m^3)	TWA (mg/m^3)
25-Jan-2016	16:50:39	0.000	0.000
25-Jan-2016	16:54:39	0.000	0.000
26-Jan-2016	08:48:15	0.000	0.000
26-Jan-2016	08:52:15	0.000	0.000
26-Jan-2016	08:56:15	0.000	0.000
26-Jan-2016	09:00:15	0.000	0.000
26-Jan-2016	09:04:15	0.000	0.000
26-Jan-2016	09:08:15	0.000	0.000
26-Jan-2016	09:12:15	0.000	0.000
26-Jan-2016	09:16:15	0.000	0.000
26-Jan-2016	09:20:15	0.000	0.000
26-Jan-2016	09:24:15	0.000	0.000
26-Jan-2016	09:28:15	0.000	0.001
26-Jan-2016	09:32:15	0.000	0.001
26-Jan-2016	09:36:15	0.000	0.001
26-Jan-2016	09:40:15	0.000	0.002
26-Jan-2016	09:44:15	0.000	0.006
26-Jan-2016	09:48:15	0.002	0.007
26-Jan-2016	09:52:15	0.000	0.005
26-Jan-2016	09:56:15	0.000	0.001
26-Jan-2016	10:00:15	0.005	0.003
26-Jan-2016	10:04:15	0.012	0.003
26-Jan-2016	10:08:15	0.003	0.003
26-Jan-2016	10:12:15	0.000	0.000
26-Jan-2016	10:16:15	0.000	0.000
26-Jan-2016	10:20:15	0.008	0.000
26-Jan-2016	10:24:15	0.001	0.000
26-Jan-2016	10:28:15	0.000	0.000
26-Jan-2016	10:32:15	0.000	0.000
26-Jan-2016	10:36:15	0.000	0.000
26-Jan-2016	10:40:15	0.000	0.000
26-Jan-2016	10:44:15	0.000	0.000
26-Jan-2016	10:48:15	0.000	0.000
26-Jan-2016	10:52:15	0.000	0.000
26-Jan-2016	10:56:15	0.000	0.000
26-Jan-2016	11:00:15	0.000	0.000
26-Jan-2016	11:04:15	0.000	0.000
26-Jan-2016	11:08:15	0.000	0.000
26-Jan-2016	11:12:15	0.000	0.000
26-Jan-2016	11:16:15	0.000	0.000
26-Jan-2016	11:20:15	0.000	0.000

DUST MONITORING

January 2016

shading indicates values over the threshold

Monitor: 1

Threshold: 0.15 (mg/m^3)

Date	Time	Value (mg/m^3)	TWA (mg/m^3)
26-Jan-2016	11:24:15	0.000	0.000
26-Jan-2016	11:28:15	0.000	0.000
26-Jan-2016	11:32:15	0.000	0.000
26-Jan-2016	11:36:15	0.000	0.000
26-Jan-2016	11:40:15	0.000	0.000
26-Jan-2016	11:44:15	0.000	0.000
26-Jan-2016	11:48:15	0.000	0.000
26-Jan-2016	11:52:15	0.000	0.000
26-Jan-2016	11:56:15	0.000	0.000
26-Jan-2016	12:00:15	0.000	0.000
26-Jan-2016	12:04:15	0.000	0.000
26-Jan-2016	12:08:15	0.000	0.000
26-Jan-2016	12:12:15	0.000	0.000
26-Jan-2016	12:16:15	0.000	0.000
26-Jan-2016	12:20:15	0.000	0.000
26-Jan-2016	12:24:15	0.000	0.000
26-Jan-2016	12:28:15	0.000	0.000
26-Jan-2016	12:32:15	0.000	0.000
26-Jan-2016	12:36:15	0.000	0.000
26-Jan-2016	12:40:15	0.000	0.000
26-Jan-2016	12:44:15	0.000	0.000
26-Jan-2016	12:48:15	0.000	0.000
26-Jan-2016	12:52:15	0.000	0.000
26-Jan-2016	12:56:15	0.000	0.003
26-Jan-2016	13:00:15	0.000	0.004
26-Jan-2016	13:04:15	0.000	0.008
26-Jan-2016	13:08:15	0.000	0.013
28-Jan-2016	08:53:59	0.001	0.015
28-Jan-2016	08:57:59	0.004	0.015
28-Jan-2016	09:01:59	0.007	0.015
28-Jan-2016	09:05:59	0.014	0.016
28-Jan-2016	09:09:59	0.018	0.020
28-Jan-2016	09:13:59	0.014	0.021
28-Jan-2016	09:17:59	0.013	0.022
28-Jan-2016	09:21:59	0.017	0.023
28-Jan-2016	09:25:59	0.019	0.020
28-Jan-2016	09:29:59	0.023	0.016
28-Jan-2016	09:33:59	0.022	0.011
28-Jan-2016	09:37:59	0.020	0.009
28-Jan-2016	09:41:59	0.026	0.008
28-Jan-2016	09:45:59	0.015	0.007

DUST MONITORING

January 2016

shading indicates values over the threshold

Monitor: 1

Threshold: 0.15 (mg/m^3)

Date	Time	Value (mg/m^3)	TWA (mg/m^3)
28-Jan-2016	09:49:59	0.008	0.007
28-Jan-2016	09:53:59	0.010	0.006
28-Jan-2016	09:57:59	0.008	0.007
28-Jan-2016	10:01:59	0.006	0.006
28-Jan-2016	10:05:59	0.007	0.005
28-Jan-2016	10:09:59	0.007	0.003
28-Jan-2016	10:13:59	0.005	0.003
28-Jan-2016	10:17:59	0.008	0.002
28-Jan-2016	10:21:59	0.004	0.002
28-Jan-2016	10:25:59	0.003	0.002
28-Jan-2016	10:29:59	0.003	0.002
28-Jan-2016	10:33:59	0.002	0.001
28-Jan-2016	10:37:59	0.002	0.004
28-Jan-2016	10:41:59	0.003	0.010
28-Jan-2016	10:45:59	0.002	0.010
28-Jan-2016	10:49:59	0.002	0.007
28-Jan-2016	10:53:59	0.000	0.000
28-Jan-2016	10:57:59	0.009	0.000
28-Jan-2016	11:01:59	0.020	0.000
28-Jan-2016	11:05:59	0.000	0.000
28-Jan-2016	11:09:59	0.000	0.000
28-Jan-2016	11:13:59	0.000	0.000
28-Jan-2016	11:17:59	0.000	0.000
28-Jan-2016	11:21:59	0.000	0.000
28-Jan-2016	11:25:59	0.000	0.000
28-Jan-2016	11:29:59	0.000	0.000
28-Jan-2016	11:33:59	0.000	0.000
28-Jan-2016	11:37:59	0.000	0.000
28-Jan-2016	11:41:59	0.000	0.000
28-Jan-2016	11:45:59	0.000	0.000
28-Jan-2016	11:49:59	0.000	0.000
28-Jan-2016	11:53:59	0.000	0.000
28-Jan-2016	11:57:59	0.000	0.000
28-Jan-2016	12:01:59	0.000	0.000
28-Jan-2016	12:05:59	0.000	0.000
28-Jan-2016	12:09:59	0.000	0.000
28-Jan-2016	12:13:59	0.000	0.000
28-Jan-2016	12:17:59	0.000	0.000
28-Jan-2016	12:21:59	0.000	0.000
28-Jan-2016	12:25:59	0.000	0.000
28-Jan-2016	12:29:59	0.000	0.000

DUST MONITORING

January 2016

shading indicates values over the threshold

Monitor: 1

Threshold: 0.15 (mg/m^3)

Date	Time	Value (mg/m^3)	TWA (mg/m^3)
28-Jan-2016	12:33:59	0.000	0.000
28-Jan-2016	12:37:59	0.000	0.000
28-Jan-2016	12:41:59	0.000	0.000
28-Jan-2016	12:45:59	0.000	0.000
28-Jan-2016	12:49:59	0.000	0.000
28-Jan-2016	12:53:59	0.000	0.000
28-Jan-2016	12:57:59	0.000	0.000
28-Jan-2016	13:01:59	0.000	0.000
28-Jan-2016	13:05:59	0.000	0.000
28-Jan-2016	13:09:59	0.000	0.000
28-Jan-2016	13:13:59	0.000	0.000
28-Jan-2016	13:17:59	0.000	0.000
28-Jan-2016	13:21:59	0.000	0.000
28-Jan-2016	13:25:59	0.000	0.000
28-Jan-2016	13:29:59	0.000	0.000
28-Jan-2016	13:33:59	0.000	0.000
28-Jan-2016	13:37:59	0.000	0.000
28-Jan-2016	13:41:59	0.000	0.000
28-Jan-2016	13:45:59	0.000	0.000
28-Jan-2016	13:49:59	0.000	0.000
28-Jan-2016	13:53:59	0.000	0.000
28-Jan-2016	13:57:59	0.000	0.000
28-Jan-2016	14:01:59	0.000	0.000
28-Jan-2016	14:05:59	0.000	0.000
28-Jan-2016	14:09:59	0.000	0.001
28-Jan-2016	14:13:59	0.000	0.001
28-Jan-2016	14:17:59	0.000	0.001
28-Jan-2016	14:21:59	0.000	0.000
28-Jan-2016	14:25:59	0.000	0.001
28-Jan-2016	14:29:59	0.002	0.001
28-Jan-2016	14:33:59	0.000	0.001
28-Jan-2016	14:37:59	0.000	0.000
28-Jan-2016	14:41:59	0.000	0.000
28-Jan-2016	14:45:59	0.003	0.000
28-Jan-2016	14:49:59	0.001	0.000
28-Jan-2016	14:53:59	0.000	0.001
28-Jan-2016	14:57:59	0.000	0.001
28-Jan-2016	15:01:59	0.000	0.001
28-Jan-2016	15:05:59	0.001	0.000
28-Jan-2016	15:09:59	0.000	0.000
28-Jan-2016	15:13:59	0.002	0.000

DUST MONITORING

January 2016

shading indicates values over the threshold

Monitor: 1

Threshold: 0.15 (mg/m^3)

Date	Time	Value (mg/m^3)	TWA (mg/m^3)
28-Jan-2016	15:17:59	0.000	0.000
28-Jan-2016	15:21:59	0.000	0.000
28-Jan-2016	15:25:59	0.000	0.000
28-Jan-2016	15:29:59	0.000	0.000
28-Jan-2016	15:33:59	0.000	0.000
28-Jan-2016	15:37:59	0.000	0.000
28-Jan-2016	15:41:59	0.000	0.000
28-Jan-2016	15:45:59	0.000	0.000
28-Jan-2016	15:49:59	0.001	0.000
28-Jan-2016	15:53:59	0.000	0.000
28-Jan-2016	15:57:59	0.000	0.000
28-Jan-2016	16:01:59	0.000	0.000
28-Jan-2016	16:05:59	0.000	0.000
28-Jan-2016	16:09:59	0.000	0.000
28-Jan-2016	16:13:59	0.000	0.000
28-Jan-2016	16:17:59	0.000	0.001
28-Jan-2016	16:21:59	0.001	0.001
28-Jan-2016	16:25:59	0.000	0.000
28-Jan-2016	16:29:59	0.000	0.000
29-Jan-2016	09:25:46	0.002	0.000
29-Jan-2016	09:29:46	0.000	0.000
29-Jan-2016	09:33:46	0.000	0.000
29-Jan-2016	09:37:46	0.000	0.000
29-Jan-2016	09:41:46	0.000	0.000
29-Jan-2016	09:45:46	0.000	0.000
29-Jan-2016	09:49:46	0.000	0.000
29-Jan-2016	09:53:46	0.000	0.000
29-Jan-2016	09:57:46	0.000	0.000
29-Jan-2016	10:01:46	0.000	0.000
29-Jan-2016	10:05:46	0.000	0.000
29-Jan-2016	10:09:46	0.000	0.000
29-Jan-2016	10:13:46	0.000	0.000
29-Jan-2016	10:17:46	0.000	0.000
29-Jan-2016	10:21:46	0.000	0.000
29-Jan-2016	10:25:46	0.000	0.000
29-Jan-2016	10:29:46	0.000	0.000
29-Jan-2016	10:33:46	0.000	0.000
29-Jan-2016	10:37:46	0.000	0.000
29-Jan-2016	10:41:46	0.000	0.000
29-Jan-2016	10:45:46	0.000	0.000
29-Jan-2016	10:49:46	0.000	0.000

DUST MONITORING

January 2016

shading indicates values over the threshold

Monitor: 1

Threshold: 0.15 (mg/m^3)

Date	Time	Value (mg/m^3)	TWA (mg/m^3)
29-Jan-2016	10:53:46	0.000	0.000
29-Jan-2016	10:57:46	0.000	0.000
29-Jan-2016	11:01:46	0.000	0.000
29-Jan-2016	11:05:46	0.000	0.000
29-Jan-2016	11:09:46	0.000	0.000
29-Jan-2016	11:13:46	0.000	0.000
29-Jan-2016	11:17:46	0.000	0.001
29-Jan-2016	11:21:46	0.000	0.001
29-Jan-2016	11:25:46	0.000	0.001
29-Jan-2016	11:29:46	0.000	0.000
29-Jan-2016	11:33:46	0.000	0.000
29-Jan-2016	11:37:46	0.003	0.000
29-Jan-2016	11:41:46	0.000	0.000
29-Jan-2016	11:45:46	0.000	0.000
29-Jan-2016	11:49:46	0.000	0.000
29-Jan-2016	11:53:46	0.000	0.000
29-Jan-2016	11:57:46	0.000	0.000
29-Jan-2016	12:01:46	0.000	0.000
29-Jan-2016	12:05:46	0.000	0.000
29-Jan-2016	12:09:46	0.000	0.000
29-Jan-2016	12:13:46	0.000	0.000
29-Jan-2016	12:17:46	0.000	0.000
29-Jan-2016	12:21:46	0.000	0.000
29-Jan-2016	12:25:46	0.000	0.000
29-Jan-2016	12:29:46	0.000	0.000
29-Jan-2016	12:33:46	0.000	0.000
29-Jan-2016	12:37:46	0.000	0.000
29-Jan-2016	12:41:46	0.000	0.000
29-Jan-2016	12:45:46	0.000	0.000
29-Jan-2016	12:49:46	0.000	0.000
29-Jan-2016	12:53:46	0.000	0.000
29-Jan-2016	12:57:46	0.000	0.000
29-Jan-2016	13:01:46	0.000	0.000

DUST MONITORING

January 2016

shading indicates values over the threshold

Monitor: 2

Threshold: 0.15 (mg/m^3)

Date	Time	Value (mg/m^3)	TWA (mg/m^3)
5-Jan-2016	09:29:49	0.002	0.001
5-Jan-2016	09:33:49	0.000	0.001
5-Jan-2016	09:37:49	0.000	0.000
5-Jan-2016	09:41:49	0.000	0.000
5-Jan-2016	09:45:49	0.000	0.000
5-Jan-2016	09:49:49	0.000	0.000
5-Jan-2016	09:53:49	0.000	0.000
5-Jan-2016	09:57:49	0.000	0.000
5-Jan-2016	10:01:49	0.000	0.000
5-Jan-2016	10:05:49	0.001	0.001
5-Jan-2016	10:09:49	0.001	0.002
5-Jan-2016	10:13:49	0.003	0.001
5-Jan-2016	10:17:49	0.000	0.001
5-Jan-2016	10:21:49	0.001	0.001
5-Jan-2016	10:25:49	0.001	0.001
5-Jan-2016	10:29:49	0.001	0.001
5-Jan-2016	10:33:49	0.001	0.001
5-Jan-2016	10:37:49	0.001	0.001
5-Jan-2016	10:41:49	0.000	0.000
5-Jan-2016	10:45:49	0.000	0.000
5-Jan-2016	10:49:49	0.000	0.000
5-Jan-2016	10:53:49	0.000	0.000
5-Jan-2016	10:57:49	0.001	0.000
5-Jan-2016	11:01:49	0.000	0.000
5-Jan-2016	11:05:49	0.000	0.000
5-Jan-2016	11:09:49	0.000	0.000
5-Jan-2016	11:13:49	0.001	0.001
5-Jan-2016	11:17:49	0.002	0.001
5-Jan-2016	11:21:49	0.001	0.001
5-Jan-2016	11:25:49	0.000	0.000
5-Jan-2016	11:29:49	0.000	0.001
5-Jan-2016	11:33:49	0.002	0.001
5-Jan-2016	11:37:49	0.001	0.002
5-Jan-2016	11:41:49	0.002	0.001
5-Jan-2016	11:45:49	0.001	0.001
5-Jan-2016	11:49:49	0.000	0.001
5-Jan-2016	11:53:49	0.001	0.000
5-Jan-2016	11:57:49	0.000	0.001
5-Jan-2016	12:01:49	0.001	0.001
5-Jan-2016	12:05:49	0.002	0.002
5-Jan-2016	12:09:49	0.002	0.001

DUST MONITORING

January 2016

shading indicates values over the threshold

Monitor: 2

Threshold: 0.15 (mg/m^3)

Date	Time	Value (mg/m^3)	TWA (mg/m^3)
5-Jan-2016	12:13:49	0.000	0.001
5-Jan-2016	12:17:49	0.001	0.001
5-Jan-2016	12:21:49	0.003	0.002
5-Jan-2016	12:25:49	0.001	0.001
5-Jan-2016	12:29:49	0.000	0.000
5-Jan-2016	12:33:49	0.000	0.001
5-Jan-2016	12:37:49	0.002	0.001
5-Jan-2016	12:41:49	0.001	0.001
5-Jan-2016	12:45:49	0.001	0.001
5-Jan-2016	12:49:49	0.000	0.001
5-Jan-2016	12:53:49	0.001	0.001
5-Jan-2016	12:57:49	0.001	0.001
5-Jan-2016	13:01:49	0.000	0.001
5-Jan-2016	13:05:49	0.001	0.001
5-Jan-2016	13:09:49	0.001	0.001
5-Jan-2016	13:13:49	0.001	0.001
5-Jan-2016	13:17:49	0.000	0.000
5-Jan-2016	13:21:49	0.000	0.000
5-Jan-2016	13:25:49	0.000	0.000
5-Jan-2016	13:29:49	0.000	0.001
5-Jan-2016	13:33:49	0.004	0.001
5-Jan-2016	13:37:49	0.000	0.001
5-Jan-2016	13:41:49	0.000	0.000
5-Jan-2016	13:45:49	0.001	0.001
5-Jan-2016	13:49:49	0.001	0.001
5-Jan-2016	13:53:49	0.000	0.001
5-Jan-2016	13:57:49	0.001	0.000
5-Jan-2016	14:01:49	0.000	0.001
5-Jan-2016	14:05:49	0.001	0.001
5-Jan-2016	14:09:49	0.001	0.001
5-Jan-2016	14:13:49	0.002	0.002
5-Jan-2016	14:17:49	0.002	0.002
5-Jan-2016	14:21:49	0.002	0.002
5-Jan-2016	14:25:49	0.001	0.002
5-Jan-2016	14:29:49	0.003	0.002
5-Jan-2016	14:33:49	0.003	0.003
5-Jan-2016	14:37:49	0.002	0.002
5-Jan-2016	14:41:49	0.002	0.002
5-Jan-2016	14:45:49	0.003	0.002
5-Jan-2016	14:49:49	0.001	0.003
5-Jan-2016	14:53:49	0.004	0.003

DUST MONITORING

January 2016

shading indicates values over the threshold

Monitor: 2

Threshold: 0.15 (mg/m^3)

Date	Time	Value (mg/m^3)	TWA (mg/m^3)
5-Jan-2016	14:57:49	0.003	0.003
5-Jan-2016	15:01:49	0.002	0.002
5-Jan-2016	15:05:49	0.002	0.002
5-Jan-2016	15:09:49	0.003	0.002
5-Jan-2016	15:13:49	0.002	0.002
5-Jan-2016	15:17:49	0.002	0.002
5-Jan-2016	15:21:49	0.002	0.002
5-Jan-2016	15:25:49	0.002	0.002
5-Jan-2016	15:29:49	0.003	0.003
5-Jan-2016	15:33:49	0.003	0.003
5-Jan-2016	15:37:49	0.002	0.003
5-Jan-2016	15:41:49	0.003	0.002
5-Jan-2016	15:45:49	0.002	0.002
5-Jan-2016	15:49:49	0.002	0.002
5-Jan-2016	15:53:49	0.003	0.003
5-Jan-2016	15:57:49	0.003	0.003
5-Jan-2016	16:01:49	0.002	0.003
5-Jan-2016	16:05:49	0.003	0.003
5-Jan-2016	16:09:49	0.004	0.004
5-Jan-2016	16:13:49	0.004	0.004
5-Jan-2016	16:17:49	0.005	0.004
5-Jan-2016	16:21:49	0.002	0.004
5-Jan-2016	16:25:49	0.006	0.005
5-Jan-2016	16:29:49	0.006	0.005
5-Jan-2016	16:33:49	0.003	0.004
5-Jan-2016	16:37:49	0.002	0.003
5-Jan-2016	16:41:49	0.003	0.003
5-Jan-2016	16:45:49	0.003	0.003
5-Jan-2016	16:49:49	0.002	0.003
5-Jan-2016	16:53:49	0.003	0.002
5-Jan-2016	16:57:49	0.002	0.002
5-Jan-2016	17:01:49	0.002	0.002
5-Jan-2016	17:05:49	0.002	0.002
5-Jan-2016	17:09:49	0.002	0.002
6-Jan-2016	09:51:38	0.017	0.016
6-Jan-2016	09:55:38	0.014	0.015
6-Jan-2016	09:59:38	0.014	0.015
6-Jan-2016	10:03:38	0.016	0.014
6-Jan-2016	10:07:38	0.013	0.014
6-Jan-2016	10:11:38	0.013	0.013
6-Jan-2016	10:15:38	0.013	0.014

DUST MONITORING

January 2016

shading indicates values over the threshold

Monitor: 2

Threshold: 0.15 (mg/m^3)

Date	Time	Value (mg/m^3)	TWA (mg/m^3)
6-Jan-2016	10:19:38	0.015	0.014
6-Jan-2016	10:23:38	0.013	0.015
6-Jan-2016	10:27:38	0.016	0.014
6-Jan-2016	10:31:38	0.013	0.014
6-Jan-2016	10:35:38	0.014	0.014
6-Jan-2016	10:39:38	0.014	0.014
6-Jan-2016	10:43:38	0.013	0.014
6-Jan-2016	10:47:38	0.014	0.015
6-Jan-2016	10:51:38	0.017	0.016
6-Jan-2016	10:55:38	0.016	0.016
6-Jan-2016	10:59:38	0.015	0.015
6-Jan-2016	11:03:38	0.014	0.016
6-Jan-2016	11:07:38	0.018	0.016
11-Jan-2016	08:58:01	0.001	0.001
11-Jan-2016	09:02:01	0.000	0.000
11-Jan-2016	09:06:01	0.000	0.000
11-Jan-2016	09:10:01	0.000	0.000
11-Jan-2016	09:14:01	0.000	0.000
11-Jan-2016	09:18:01	0.000	0.000
11-Jan-2016	09:22:01	0.000	0.000
11-Jan-2016	09:26:01	0.000	0.000
11-Jan-2016	09:30:01	0.000	0.000
11-Jan-2016	09:34:01	0.000	0.000
11-Jan-2016	09:38:01	0.000	0.000
11-Jan-2016	09:42:01	0.000	0.000
11-Jan-2016	09:46:01	0.001	0.001
11-Jan-2016	09:50:01	0.001	0.001
11-Jan-2016	09:54:01	0.001	0.001
11-Jan-2016	09:58:01	0.001	0.002
11-Jan-2016	10:02:01	0.003	0.001
11-Jan-2016	10:06:01	0.000	0.001
11-Jan-2016	10:10:01	0.000	0.000
11-Jan-2016	10:14:01	0.001	0.000
11-Jan-2016	10:18:01	0.000	0.001
11-Jan-2016	10:22:01	0.003	0.001
11-Jan-2016	10:26:01	0.001	0.002
11-Jan-2016	10:30:01	0.001	0.001
11-Jan-2016	10:34:01	0.000	0.001
11-Jan-2016	10:38:01	0.001	0.001
11-Jan-2016	10:42:01	0.001	0.001
11-Jan-2016	10:46:01	0.001	0.001

DUST MONITORING

January 2016

shading indicates values over the threshold

Monitor: 2

Threshold: 0.15 (mg/m^3)

Date	Time	Value (mg/m^3)	TWA (mg/m^3)
11-Jan-2016	10:50:01	0.000	0.000
11-Jan-2016	10:54:01	0.000	0.000
11-Jan-2016	10:58:01	0.001	0.001
11-Jan-2016	11:02:01	0.001	0.001
11-Jan-2016	11:06:01	0.001	0.001
11-Jan-2016	11:10:01	0.000	0.000
11-Jan-2016	11:14:01	0.000	0.000
11-Jan-2016	11:18:01	0.000	0.001
11-Jan-2016	11:22:01	0.002	0.002
11-Jan-2016	11:26:01	0.005	0.004
11-Jan-2016	11:30:01	0.004	0.004
11-Jan-2016	11:34:01	0.002	0.002
11-Jan-2016	11:38:01	0.001	0.001
11-Jan-2016	11:42:01	0.001	0.001
11-Jan-2016	11:46:01	0.001	0.001
11-Jan-2016	11:50:01	0.001	0.001
11-Jan-2016	11:54:01	0.000	0.000
11-Jan-2016	11:58:01	0.000	0.000
11-Jan-2016	12:02:01	0.001	0.000
11-Jan-2016	12:06:01	0.000	0.000
11-Jan-2016	12:10:01	0.000	0.000
11-Jan-2016	12:14:01	0.001	0.000
11-Jan-2016	12:18:01	0.000	0.000
11-Jan-2016	12:22:01	0.000	0.000
11-Jan-2016	12:26:01	0.000	0.000
11-Jan-2016	12:30:01	0.001	0.000
11-Jan-2016	12:34:01	0.000	0.000
11-Jan-2016	12:38:01	0.000	0.000
11-Jan-2016	12:42:01	0.001	0.001
11-Jan-2016	12:46:01	0.001	0.001
11-Jan-2016	12:50:01	0.001	0.001
11-Jan-2016	12:54:01	0.001	0.001
11-Jan-2016	12:58:01	0.002	0.002
11-Jan-2016	13:02:01	0.002	0.002
11-Jan-2016	13:06:01	0.001	0.002
11-Jan-2016	13:10:01	0.002	0.002
11-Jan-2016	13:14:01	0.002	0.002
11-Jan-2016	13:18:01	0.002	0.002
11-Jan-2016	13:22:01	0.001	0.001
11-Jan-2016	13:26:01	0.001	0.001
11-Jan-2016	13:30:01	0.000	0.001

DUST MONITORING

January 2016

shading indicates values over the threshold

Monitor: 2

Threshold: 0.15 (mg/m^3)

Date	Time	Value (mg/m^3)	TWA (mg/m^3)
11-Jan-2016	13:34:01	0.002	0.001
11-Jan-2016	13:38:01	0.001	0.002
11-Jan-2016	13:42:01	0.002	0.002
11-Jan-2016	13:46:01	0.002	0.002
11-Jan-2016	13:50:01	0.002	0.001
11-Jan-2016	13:54:01	0.000	0.001
11-Jan-2016	13:58:01	0.000	0.000
11-Jan-2016	14:02:01	0.000	0.001
11-Jan-2016	14:06:01	0.002	0.001
11-Jan-2016	14:10:01	0.001	0.001
11-Jan-2016	14:14:01	0.001	0.001
11-Jan-2016	14:18:01	0.001	0.001
11-Jan-2016	14:22:01	0.002	0.001
11-Jan-2016	14:26:01	0.001	0.001
11-Jan-2016	14:30:01	0.001	0.001
11-Jan-2016	14:34:01	0.000	0.000
11-Jan-2016	14:38:01	0.000	0.000
11-Jan-2016	14:42:01	0.000	0.000
11-Jan-2016	14:46:01	0.001	0.000
11-Jan-2016	14:50:01	0.000	0.000
11-Jan-2016	14:54:01	0.000	0.000
11-Jan-2016	14:58:01	0.000	0.000
11-Jan-2016	15:02:01	0.001	0.001
11-Jan-2016	15:06:01	0.001	0.001
11-Jan-2016	15:10:01	0.001	0.001
11-Jan-2016	15:14:01	0.001	0.001
11-Jan-2016	15:18:01	0.002	0.002
11-Jan-2016	15:22:01	0.003	0.003
11-Jan-2016	15:26:01	0.003	0.003
11-Jan-2016	15:30:01	0.002	0.002
11-Jan-2016	15:34:01	0.001	0.001
11-Jan-2016	15:38:01	0.000	0.000
11-Jan-2016	15:42:01	0.000	0.000
11-Jan-2016	15:46:01	0.000	0.000
11-Jan-2016	15:50:01	0.000	0.000
11-Jan-2016	15:54:01	0.000	0.000
11-Jan-2016	15:58:01	0.001	0.000
11-Jan-2016	16:02:01	0.000	0.000
11-Jan-2016	16:06:01	0.000	0.000
11-Jan-2016	16:10:01	0.000	0.000
11-Jan-2016	16:14:01	0.000	0.000

DUST MONITORING

January 2016

shading indicates values over the threshold

Monitor: 2

Threshold: 0.15 (mg/m^3)

Date	Time	Value (mg/m^3)	TWA (mg/m^3)
11-Jan-2016	16:18:01	0.000	0.000
11-Jan-2016	16:22:01	0.000	0.000
11-Jan-2016	16:26:01	0.000	0.000
11-Jan-2016	16:30:01	0.000	0.000
11-Jan-2016	16:34:01	0.000	0.000
11-Jan-2016	16:38:01	0.000	0.000
11-Jan-2016	16:42:01	0.000	0.000
11-Jan-2016	16:46:01	0.000	0.000
11-Jan-2016	16:50:01	0.000	0.000
11-Jan-2016	16:54:01	0.001	0.000
11-Jan-2016	16:58:01	0.000	0.000
11-Jan-2016	17:02:01	0.000	0.000
11-Jan-2016	17:06:01	0.000	0.000
11-Jan-2016	17:10:01	0.001	0.001
12-Jan-2016	08:38:11	0.000	0.001
12-Jan-2016	08:42:11	0.002	0.001
12-Jan-2016	08:46:11	0.000	0.001
12-Jan-2016	08:50:11	0.001	0.001
12-Jan-2016	08:54:11	0.001	0.001
12-Jan-2016	08:58:11	0.000	0.001
12-Jan-2016	09:02:11	0.001	0.000
12-Jan-2016	09:06:11	0.000	0.001
12-Jan-2016	09:10:11	0.001	0.001
12-Jan-2016	09:14:11	0.001	0.001
12-Jan-2016	09:18:11	0.001	0.001
12-Jan-2016	09:22:11	0.001	0.001
12-Jan-2016	09:26:11	0.001	0.001
12-Jan-2016	09:30:11	0.001	0.001
12-Jan-2016	09:34:11	0.001	0.001
12-Jan-2016	09:38:11	0.001	0.001
12-Jan-2016	09:42:11	0.001	0.001
12-Jan-2016	09:46:11	0.001	0.001
12-Jan-2016	09:50:11	0.002	0.001
12-Jan-2016	09:54:11	0.001	0.001
12-Jan-2016	09:58:11	0.001	0.001
12-Jan-2016	10:02:11	0.001	0.001
12-Jan-2016	10:06:11	0.002	0.002
12-Jan-2016	10:10:11	0.002	0.002
12-Jan-2016	10:14:11	0.002	0.002
12-Jan-2016	10:18:11	0.002	0.002
12-Jan-2016	10:22:11	0.002	0.002

DUST MONITORING

January 2016

shading indicates values over the threshold

Monitor: 2

Threshold: 0.15 (mg/m^3)

Date	Time	Value (mg/m^3)	TWA (mg/m^3)
12-Jan-2016	10:26:11	0.002	0.002
12-Jan-2016	10:30:11	0.002	0.002
12-Jan-2016	10:34:11	0.002	0.002
12-Jan-2016	10:38:11	0.002	0.002
12-Jan-2016	10:42:11	0.002	0.002
12-Jan-2016	10:46:11	0.002	0.002
12-Jan-2016	10:50:11	0.002	0.002
12-Jan-2016	10:54:11	0.002	0.003
12-Jan-2016	10:58:11	0.004	0.003
12-Jan-2016	11:02:11	0.003	0.003
12-Jan-2016	11:06:11	0.003	0.004
12-Jan-2016	11:10:11	0.005	0.004
12-Jan-2016	11:14:11	0.003	0.004
12-Jan-2016	11:18:11	0.004	0.003
12-Jan-2016	11:22:11	0.003	0.003
12-Jan-2016	11:26:11	0.003	0.003
12-Jan-2016	11:30:11	0.003	0.003
12-Jan-2016	11:34:11	0.004	0.003
12-Jan-2016	11:38:11	0.003	0.004
12-Jan-2016	11:42:11	0.004	0.004
12-Jan-2016	11:46:11	0.005	0.004
12-Jan-2016	11:50:11	0.004	0.004
12-Jan-2016	11:54:11	0.003	0.004
12-Jan-2016	11:58:11	0.004	0.004
12-Jan-2016	12:02:11	0.006	0.005
12-Jan-2016	12:06:11	0.004	0.005
12-Jan-2016	12:10:11	0.004	0.004
12-Jan-2016	12:14:11	0.005	0.004
12-Jan-2016	12:18:11	0.003	0.004
12-Jan-2016	12:22:11	0.005	0.004
12-Jan-2016	12:26:11	0.005	0.005
12-Jan-2016	12:30:11	0.005	0.005
12-Jan-2016	12:34:11	0.004	0.005
12-Jan-2016	12:38:11	0.005	0.004
12-Jan-2016	12:42:11	0.004	0.004
12-Jan-2016	12:46:11	0.004	0.004
12-Jan-2016	12:50:11	0.005	0.005
12-Jan-2016	12:54:11	0.005	0.005
12-Jan-2016	12:58:11	0.005	0.005
12-Jan-2016	13:02:11	0.005	0.005
12-Jan-2016	13:06:11	0.006	0.005

DUST MONITORING

January 2016

shading indicates values over the threshold

Monitor: 2

Threshold: 0.15 (mg/m^3)

Date	Time	Value (mg/m^3)	TWA (mg/m^3)
12-Jan-2016	13:10:11	0.005	0.005
12-Jan-2016	13:14:11	0.005	0.005
12-Jan-2016	13:18:11	0.004	0.004
12-Jan-2016	13:22:11	0.004	0.004
12-Jan-2016	13:26:11	0.004	0.004
12-Jan-2016	13:30:11	0.005	0.004
12-Jan-2016	13:34:11	0.004	0.004
12-Jan-2016	13:38:11	0.004	0.005
12-Jan-2016	13:42:11	0.006	0.005
12-Jan-2016	13:46:11	0.006	0.005
12-Jan-2016	13:50:11	0.004	0.005
12-Jan-2016	13:54:11	0.004	0.004
12-Jan-2016	13:58:11	0.004	0.004
13-Jan-2016	09:42:28	0.005	0.005
13-Jan-2016	09:46:28	0.005	0.005
13-Jan-2016	09:50:28	0.004	0.005
13-Jan-2016	09:54:28	0.005	0.005
13-Jan-2016	09:58:28	0.005	0.005
13-Jan-2016	10:02:28	0.004	0.005
13-Jan-2016	10:06:28	0.007	0.007
13-Jan-2016	10:10:28	0.009	0.013
13-Jan-2016	10:14:28	0.024	0.027
13-Jan-2016	10:18:28	0.049	0.028
13-Jan-2016	10:22:28	0.011	0.023
13-Jan-2016	10:26:28	0.008	0.009
13-Jan-2016	10:30:28	0.008	0.007
13-Jan-2016	10:34:28	0.006	0.005
13-Jan-2016	10:38:28	0.002	0.003
13-Jan-2016	10:42:28	0.000	0.001
13-Jan-2016	10:46:28	0.002	0.002
13-Jan-2016	10:50:28	0.004	0.002
13-Jan-2016	10:54:28	0.000	0.001
13-Jan-2016	10:58:28	0.000	0.000
13-Jan-2016	11:02:28	0.000	0.000
13-Jan-2016	11:06:28	0.000	0.000
13-Jan-2016	11:10:28	0.000	0.000
13-Jan-2016	11:14:28	0.000	0.000
13-Jan-2016	11:18:28	0.000	0.000
13-Jan-2016	11:22:28	0.000	0.000
13-Jan-2016	11:26:28	0.000	0.000
13-Jan-2016	11:30:28	0.001	0.001

DUST MONITORING

January 2016

shading indicates values over the threshold

Monitor: 2

Threshold: 0.15 (mg/m^3)

Date	Time	Value (mg/m^3)	TWA (mg/m^3)
13-Jan-2016	11:34:28	0.002	0.001
13-Jan-2016	11:38:28	0.000	0.001
13-Jan-2016	11:42:28	0.000	0.000
13-Jan-2016	11:46:28	0.000	0.000
13-Jan-2016	11:50:28	0.001	0.000
13-Jan-2016	11:54:28	0.000	0.000
13-Jan-2016	11:58:28	0.000	0.001
13-Jan-2016	12:02:28	0.003	0.001
13-Jan-2016	12:06:28	0.001	0.001
13-Jan-2016	12:10:28	0.000	0.000
13-Jan-2016	12:14:28	0.000	0.000
13-Jan-2016	12:18:28	0.000	0.000
13-Jan-2016	12:22:28	0.001	0.000
13-Jan-2016	12:26:28	0.000	0.000
13-Jan-2016	12:30:28	0.000	0.000
13-Jan-2016	12:34:28	0.000	0.000
13-Jan-2016	12:38:28	0.000	0.000
13-Jan-2016	12:42:28	0.000	0.000
13-Jan-2016	12:46:28	0.000	0.000
13-Jan-2016	12:50:28	0.001	0.002
13-Jan-2016	12:54:28	0.004	0.002
13-Jan-2016	12:58:28	0.000	0.001
13-Jan-2016	13:02:28	0.000	0.000
13-Jan-2016	13:06:28	0.000	0.000
13-Jan-2016	13:10:28	0.000	0.000
13-Jan-2016	13:14:28	0.001	0.000
13-Jan-2016	13:18:28	0.000	0.000
13-Jan-2016	13:22:28	0.000	0.000
13-Jan-2016	13:26:28	0.000	0.000
13-Jan-2016	13:30:28	0.000	0.000
13-Jan-2016	13:34:28	0.000	0.000
13-Jan-2016	13:38:28	0.000	0.000
13-Jan-2016	13:42:28	0.000	0.000
13-Jan-2016	13:46:28	0.001	0.001
13-Jan-2016	13:50:28	0.002	0.001
13-Jan-2016	13:54:28	0.000	0.001
13-Jan-2016	13:58:28	0.000	0.005
13-Jan-2016	14:02:28	0.014	0.005
13-Jan-2016	14:06:28	0.000	0.005
13-Jan-2016	14:10:28	0.000	0.000
13-Jan-2016	14:14:28	0.000	0.001

DUST MONITORING

January 2016

shading indicates values over the threshold

Monitor: 2

Threshold: 0.15 (mg/m^3)

Date	Time	Value (mg/m^3)	TWA (mg/m^3)
13-Jan-2016	14:18:28	0.002	0.001
13-Jan-2016	14:22:28	0.000	0.001
13-Jan-2016	14:26:28	0.000	0.001
13-Jan-2016	14:30:28	0.003	0.002
13-Jan-2016	14:34:28	0.002	0.002
13-Jan-2016	14:38:28	0.001	0.001
13-Jan-2016	14:42:28	0.000	0.000
13-Jan-2016	14:46:28	0.000	0.000
13-Jan-2016	14:50:28	0.000	0.000
13-Jan-2016	14:54:28	0.000	0.000
13-Jan-2016	14:58:28	0.000	0.000
13-Jan-2016	15:02:28	0.000	0.000
13-Jan-2016	15:06:28	0.000	0.000
13-Jan-2016	15:10:28	0.000	0.000
13-Jan-2016	15:14:28	0.000	0.000
13-Jan-2016	15:18:28	0.001	0.001
13-Jan-2016	15:22:28	0.003	0.001
13-Jan-2016	15:26:28	0.000	0.001
13-Jan-2016	15:30:28	0.000	0.000
13-Jan-2016	15:34:28	0.001	0.000
13-Jan-2016	15:38:28	0.000	0.000
13-Jan-2016	15:42:28	0.000	0.000
13-Jan-2016	15:46:28	0.000	0.000
13-Jan-2016	15:50:28	0.000	0.000
13-Jan-2016	15:54:28	0.000	0.000
13-Jan-2016	15:58:28	0.000	0.000
13-Jan-2016	16:02:28	0.000	0.000
13-Jan-2016	16:06:28	0.000	0.000
13-Jan-2016	16:10:28	0.000	0.000
13-Jan-2016	16:14:28	0.000	0.000
13-Jan-2016	16:18:28	0.000	0.000
13-Jan-2016	16:22:28	0.000	0.000
13-Jan-2016	16:26:28	0.001	0.001
14-Jan-2016	08:47:06	0.032	0.029
14-Jan-2016	08:51:06	0.025	0.027
14-Jan-2016	08:55:06	0.023	0.022
14-Jan-2016	08:59:06	0.019	0.019
14-Jan-2016	09:03:06	0.016	0.015
14-Jan-2016	09:07:06	0.011	0.012
14-Jan-2016	09:11:06	0.008	0.010
14-Jan-2016	09:15:06	0.010	0.009

DUST MONITORING

January 2016

shading indicates values over the threshold

Monitor: 2

Threshold: 0.15 (mg/m^3)

Date	Time	Value (mg/m^3)	TWA (mg/m^3)
14-Jan-2016	09:19:06	0.009	0.011
14-Jan-2016	09:23:06	0.014	0.011
14-Jan-2016	09:27:06	0.010	0.011
14-Jan-2016	09:31:06	0.009	0.009
14-Jan-2016	09:35:06	0.008	0.011
14-Jan-2016	09:39:06	0.017	0.013
14-Jan-2016	09:43:06	0.015	0.014
14-Jan-2016	09:47:06	0.010	0.012
14-Jan-2016	09:51:06	0.012	0.014
14-Jan-2016	09:55:06	0.021	0.027
14-Jan-2016	09:59:06	0.047	0.029
14-Jan-2016	10:03:06	0.020	0.034
14-Jan-2016	10:07:06	0.036	0.024
14-Jan-2016	10:11:06	0.016	0.022
14-Jan-2016	10:15:06	0.013	0.015
14-Jan-2016	10:19:06	0.017	0.014
14-Jan-2016	10:23:06	0.012	0.014
14-Jan-2016	10:27:06	0.014	0.013
14-Jan-2016	10:31:06	0.014	0.015
14-Jan-2016	10:35:06	0.017	0.016
14-Jan-2016	10:39:06	0.017	0.017
14-Jan-2016	10:43:06	0.017	0.017
14-Jan-2016	10:47:06	0.017	0.017
14-Jan-2016	10:51:06	0.016	0.016
14-Jan-2016	10:55:06	0.016	0.016
14-Jan-2016	10:59:06	0.017	0.016
14-Jan-2016	11:03:06	0.016	0.017
14-Jan-2016	11:07:06	0.019	0.019
14-Jan-2016	11:11:06	0.021	0.019
14-Jan-2016	11:15:06	0.018	0.021
14-Jan-2016	11:19:06	0.024	0.024
14-Jan-2016	11:23:06	0.031	0.029
14-Jan-2016	11:27:06	0.032	0.033
14-Jan-2016	11:31:06	0.036	0.033
14-Jan-2016	11:35:06	0.030	0.030
14-Jan-2016	11:39:06	0.025	0.029
14-Jan-2016	11:43:06	0.031	0.028
14-Jan-2016	11:47:06	0.029	0.026
14-Jan-2016	11:51:06	0.019	0.021
14-Jan-2016	11:55:06	0.016	0.019
14-Jan-2016	11:59:06	0.021	0.019

DUST MONITORING

January 2016

shading indicates values over the threshold

Monitor: 2

Threshold: 0.15 (mg/m^3)

Date	Time	Value (mg/m^3)	TWA (mg/m^3)
14-Jan-2016	12:03:06	0.021	0.021
18-Jan-2016	09:09:58	0.002	0.001
18-Jan-2016	09:13:58	0.000	0.001
18-Jan-2016	09:17:58	0.000	0.000
18-Jan-2016	09:21:58	0.000	0.000
18-Jan-2016	09:25:58	0.000	0.000
18-Jan-2016	09:29:58	0.000	0.000
18-Jan-2016	09:33:58	0.000	0.000
18-Jan-2016	09:37:58	0.000	0.000
18-Jan-2016	09:41:58	0.001	0.001
18-Jan-2016	09:45:58	0.001	0.001
18-Jan-2016	09:49:58	0.000	0.000
18-Jan-2016	09:53:58	0.000	0.000
18-Jan-2016	09:57:58	0.000	0.000
18-Jan-2016	10:01:58	0.000	0.000
18-Jan-2016	10:05:58	0.000	0.000
18-Jan-2016	10:09:58	0.000	0.000
18-Jan-2016	10:13:58	0.000	0.000
18-Jan-2016	10:17:58	0.000	0.000
18-Jan-2016	10:21:58	0.001	0.001
18-Jan-2016	10:25:58	0.001	0.001
18-Jan-2016	10:29:58	0.001	0.001
18-Jan-2016	10:33:58	0.001	0.001
18-Jan-2016	10:37:58	0.001	0.001
18-Jan-2016	10:41:58	0.001	0.001
18-Jan-2016	10:45:58	0.000	0.001
18-Jan-2016	10:49:58	0.001	0.001
18-Jan-2016	10:53:58	0.001	0.001
18-Jan-2016	10:57:58	0.002	0.002
18-Jan-2016	11:01:58	0.002	0.003
18-Jan-2016	11:05:58	0.004	0.002
18-Jan-2016	11:09:58	0.001	0.002
18-Jan-2016	11:13:58	0.002	0.001
18-Jan-2016	11:17:58	0.000	0.001
18-Jan-2016	11:21:58	0.002	0.001
18-Jan-2016	11:25:58	0.002	0.002
18-Jan-2016	11:29:58	0.002	0.002
18-Jan-2016	11:33:58	0.003	0.003
18-Jan-2016	11:37:58	0.003	0.004
18-Jan-2016	11:41:58	0.006	0.004
18-Jan-2016	11:45:58	0.003	0.003

DUST MONITORING

January 2016

shading indicates values over the threshold

Monitor: 2

Threshold: 0.15 (mg/m^3)

Date	Time	Value (mg/m^3)	TWA (mg/m^3)
18-Jan-2016	11:49:58	0.001	0.003
18-Jan-2016	11:53:58	0.005	0.003
18-Jan-2016	11:57:58	0.002	0.003
18-Jan-2016	12:01:58	0.001	0.003
18-Jan-2016	12:05:58	0.005	0.004
18-Jan-2016	12:09:58	0.006	0.005
18-Jan-2016	12:13:58	0.004	0.005
18-Jan-2016	12:17:58	0.004	0.004
18-Jan-2016	12:21:58	0.003	0.004
18-Jan-2016	12:25:58	0.006	0.005
18-Jan-2016	12:29:58	0.006	0.006
18-Jan-2016	12:33:58	0.006	0.006
18-Jan-2016	12:37:58	0.006	0.005
18-Jan-2016	12:41:58	0.003	0.004
18-Jan-2016	12:45:58	0.002	0.002
18-Jan-2016	12:49:58	0.002	0.002
18-Jan-2016	12:53:58	0.002	0.002
18-Jan-2016	12:57:58	0.002	0.003
18-Jan-2016	13:01:58	0.005	0.003
18-Jan-2016	13:05:58	0.002	0.002
18-Jan-2016	13:09:58	0.000	0.001
18-Jan-2016	13:13:58	0.000	0.000
18-Jan-2016	13:17:58	0.000	0.000
18-Jan-2016	13:21:58	0.000	0.000
18-Jan-2016	13:25:58	0.000	0.000
18-Jan-2016	13:29:58	0.000	0.000
18-Jan-2016	13:33:58	0.001	0.000
18-Jan-2016	13:37:58	0.000	0.001
18-Jan-2016	13:41:58	0.002	0.002
18-Jan-2016	13:45:58	0.003	0.002
18-Jan-2016	13:49:58	0.001	0.002
18-Jan-2016	13:53:58	0.002	0.002
18-Jan-2016	13:57:58	0.002	0.001
18-Jan-2016	14:01:58	0.000	0.001
18-Jan-2016	14:05:58	0.000	0.001
18-Jan-2016	14:09:58	0.003	0.002
18-Jan-2016	14:13:58	0.004	0.003
18-Jan-2016	14:17:58	0.001	0.002
18-Jan-2016	14:21:58	0.002	0.001
18-Jan-2016	14:25:58	0.000	0.002
18-Jan-2016	14:29:58	0.003	0.001

DUST MONITORING

January 2016

shading indicates values over the threshold

Monitor: 2

Threshold: 0.15 (mg/m^3)

Date	Time	Value (mg/m^3)	TWA (mg/m^3)
18-Jan-2016	14:33:58	0.001	0.002
18-Jan-2016	14:37:58	0.001	0.002
18-Jan-2016	14:41:58	0.004	0.003
18-Jan-2016	14:45:58	0.003	0.003
18-Jan-2016	14:49:58	0.001	0.002
18-Jan-2016	14:53:58	0.003	0.002
18-Jan-2016	14:57:58	0.001	0.003
18-Jan-2016	15:01:58	0.005	0.004
18-Jan-2016	15:05:58	0.005	0.005
18-Jan-2016	15:09:58	0.004	0.003
18-Jan-2016	15:13:58	0.001	0.002
18-Jan-2016	15:17:58	0.000	0.000
18-Jan-2016	15:21:58	0.000	0.001
18-Jan-2016	15:25:58	0.003	0.002
18-Jan-2016	15:29:58	0.003	0.002
18-Jan-2016	15:33:58	0.001	0.003
18-Jan-2016	15:37:58	0.004	0.002
18-Jan-2016	15:41:58	0.001	0.002
18-Jan-2016	15:45:58	0.001	0.001
18-Jan-2016	15:49:58	0.000	0.001
18-Jan-2016	15:53:58	0.003	0.001
18-Jan-2016	15:57:58	0.000	0.001
18-Jan-2016	16:01:58	0.000	0.000
18-Jan-2016	16:05:58	0.000	0.000
18-Jan-2016	16:09:58	0.000	0.000
18-Jan-2016	16:13:58	0.000	0.001
18-Jan-2016	16:17:58	0.002	0.002
18-Jan-2016	16:21:58	0.005	0.002
18-Jan-2016	16:25:58	0.000	0.002
18-Jan-2016	16:29:58	0.001	0.001
19-Jan-2016	08:27:20	0.009	0.008
19-Jan-2016	08:31:20	0.006	0.008
19-Jan-2016	08:35:20	0.010	0.007
19-Jan-2016	08:39:20	0.004	0.005
19-Jan-2016	08:43:20	0.001	0.002
19-Jan-2016	08:47:20	0.000	0.000
19-Jan-2016	08:51:20	0.000	0.000
19-Jan-2016	08:55:20	0.000	0.000
19-Jan-2016	08:59:20	0.000	0.000
19-Jan-2016	09:03:20	0.000	0.000
19-Jan-2016	09:07:20	0.000	0.000

DUST MONITORING

January 2016

shading indicates values over the threshold

Monitor: 2

Threshold: 0.15 (mg/m^3)

Date	Time	Value (mg/m^3)	TWA (mg/m^3)
19-Jan-2016	09:11:20	0.001	0.001
19-Jan-2016	09:15:20	0.001	0.001
19-Jan-2016	09:19:20	0.001	0.001
19-Jan-2016	09:23:20	0.001	0.001
19-Jan-2016	09:27:20	0.001	0.004
19-Jan-2016	11:04:00	0.009	0.007
19-Jan-2016	11:08:00	0.012	0.009
19-Jan-2016	11:12:00	0.006	0.009
19-Jan-2016	11:16:00	0.008	0.007
19-Jan-2016	11:20:00	0.006	0.007
19-Jan-2016	11:24:00	0.007	0.006
19-Jan-2016	11:28:00	0.006	0.019
19-Jan-2016	13:28:47	0.045	0.025
19-Jan-2016	13:32:47	0.024	0.031
19-Jan-2016	13:36:47	0.024	0.020
19-Jan-2016	13:40:47	0.013	0.016
19-Jan-2016	13:44:47	0.012	0.013
19-Jan-2016	13:48:47	0.013	0.013
19-Jan-2016	13:52:47	0.013	0.013
19-Jan-2016	13:56:47	0.012	0.013
19-Jan-2016	14:00:47	0.014	0.012
19-Jan-2016	14:04:47	0.010	0.011
19-Jan-2016	14:08:47	0.009	0.009
19-Jan-2016	14:12:47	0.009	0.009
19-Jan-2016	14:16:47	0.009	0.009
19-Jan-2016	14:20:47	0.009	0.009
19-Jan-2016	14:24:47	0.008	0.008
19-Jan-2016	14:28:47	0.008	0.008
19-Jan-2016	14:32:47	0.009	0.009
19-Jan-2016	14:36:47	0.009	0.009
19-Jan-2016	14:40:47	0.008	0.008
19-Jan-2016	14:44:47	0.008	0.008
19-Jan-2016	14:48:47	0.008	0.007
19-Jan-2016	16:14:24	0.004	0.007
19-Jan-2016	16:18:24	0.009	0.006
19-Jan-2016	16:22:24	0.005	0.006
19-Jan-2016	16:26:24	0.005	0.006
19-Jan-2016	16:30:24	0.007	0.006
19-Jan-2016	16:34:24	0.007	0.006
19-Jan-2016	16:38:24	0.005	0.006
21-Jan-2016	08:20:41	0.050	0.051

DUST MONITORING

January 2016

shading indicates values over the threshold

Monitor: 2

Threshold: 0.15 (mg/m^3)

Date	Time	Value (mg/m^3)	TWA (mg/m^3)
21-Jan-2016	08:24:41	0.052	0.054
21-Jan-2016	08:28:41	0.059	0.059
21-Jan-2016	08:32:41	0.065	0.065
21-Jan-2016	08:36:41	0.072	0.070
21-Jan-2016	08:40:41	0.072	0.074
21-Jan-2016	08:44:41	0.078	0.078
21-Jan-2016	08:48:41	0.085	0.059
21-Jan-2016	08:52:41	0.014	0.037
21-Jan-2016	08:56:41	0.011	0.029
21-Jan-2016	12:04:13	0.061	0.045
21-Jan-2016	12:08:13	0.064	0.064
21-Jan-2016	12:12:13	0.068	0.068
21-Jan-2016	12:16:13	0.071	0.071
21-Jan-2016	12:20:13	0.073	0.067
21-Jan-2016	12:24:13	0.056	0.062
21-Jan-2016	12:28:13	0.056	0.063
21-Jan-2016	12:32:13	0.076	0.069
21-Jan-2016	12:36:13	0.076	0.076
21-Jan-2016	12:40:13	0.075	0.075
21-Jan-2016	12:44:13	0.073	0.066
21-Jan-2016	12:48:13	0.051	0.056
21-Jan-2016	13:26:13	0.045	0.048
21-Jan-2016	13:30:13	0.047	0.046
21-Jan-2016	13:34:13	0.045	0.047
21-Jan-2016	13:38:13	0.050	0.048
21-Jan-2016	13:42:13	0.050	0.051
21-Jan-2016	13:46:13	0.052	0.052
21-Jan-2016	13:50:13	0.053	0.053
21-Jan-2016	13:54:13	0.055	0.054
27-Jan-2016	08:49:04	0.039	0.045
27-Jan-2016	08:53:04	0.051	0.050
27-Jan-2016	08:57:04	0.060	0.059
27-Jan-2016	09:01:04	0.067	0.066
27-Jan-2016	09:05:04	0.071	0.074
27-Jan-2016	09:09:04	0.084	0.083
27-Jan-2016	09:13:04	0.093	0.088
27-Jan-2016	09:17:04	0.088	0.092
27-Jan-2016	09:21:04	0.094	0.094
27-Jan-2016	09:25:04	0.101	0.097
27-Jan-2016	09:29:04	0.095	0.096
27-Jan-2016	09:33:04	0.092	0.092

DUST MONITORING

January 2016

shading indicates values over the threshold

Monitor: 2

Threshold: 0.15 (mg/m^3)

Date	Time	Value (mg/m^3)	TWA (mg/m^3)
27-Jan-2016	09:37:04	0.090	0.091
27-Jan-2016	09:41:04	0.090	0.091
27-Jan-2016	09:45:04	0.094	0.089
27-Jan-2016	09:49:04	0.084	0.087
27-Jan-2016	09:53:04	0.082	0.078
27-Jan-2016	09:57:04	0.067	0.072
27-Jan-2016	10:01:04	0.067	0.065
27-Jan-2016	10:05:04	0.061	0.063
27-Jan-2016	10:09:04	0.061	0.062
27-Jan-2016	10:13:04	0.064	0.062
27-Jan-2016	10:17:04	0.062	0.061
27-Jan-2016	10:21:04	0.057	0.058
27-Jan-2016	10:25:04	0.054	0.056
27-Jan-2016	10:29:04	0.056	0.061
27-Jan-2016	10:33:04	0.073	0.062
27-Jan-2016	10:37:04	0.058	0.062
27-Jan-2016	10:41:04	0.055	0.057
27-Jan-2016	10:45:04	0.058	0.055
27-Jan-2016	10:49:04	0.051	0.052
27-Jan-2016	10:53:04	0.046	0.047
27-Jan-2016	10:57:04	0.044	0.045
27-Jan-2016	11:01:04	0.044	0.044
27-Jan-2016	11:05:04	0.043	0.043
27-Jan-2016	11:09:04	0.042	0.042
27-Jan-2016	11:13:04	0.041	0.040
27-Jan-2016	11:17:04	0.037	0.038
27-Jan-2016	11:21:04	0.037	0.036
27-Jan-2016	11:25:04	0.033	0.036
27-Jan-2016	11:29:04	0.038	0.037
27-Jan-2016	11:33:04	0.041	0.041
27-Jan-2016	11:37:04	0.043	0.041
27-Jan-2016	11:41:04	0.038	0.039
27-Jan-2016	11:45:04	0.035	0.036
27-Jan-2016	11:49:04	0.035	0.034
27-Jan-2016	11:53:04	0.031	0.031
27-Jan-2016	11:57:04	0.028	0.029
27-Jan-2016	12:01:04	0.027	0.028
27-Jan-2016	12:05:04	0.028	0.028
27-Jan-2016	12:09:04	0.028	0.026
27-Jan-2016	12:13:04	0.021	0.023
27-Jan-2016	12:17:04	0.021	0.020

DUST MONITORING

January 2016

shading indicates values over the threshold

Monitor: 2

Threshold: 0.15 (mg/m^3)

Date	Time	Value (mg/m^3)	TWA (mg/m^3)
27-Jan-2016	12:21:04	0.017	0.018
27-Jan-2016	12:25:04	0.015	0.015
27-Jan-2016	12:29:04	0.014	0.013
27-Jan-2016	12:33:04	0.011	0.011
27-Jan-2016	12:37:04	0.009	0.009
27-Jan-2016	12:41:04	0.007	0.008
27-Jan-2016	12:45:04	0.007	0.007
27-Jan-2016	12:49:04	0.008	0.007
27-Jan-2016	12:53:04	0.005	0.006
27-Jan-2016	12:57:04	0.006	0.006
27-Jan-2016	13:01:04	0.006	0.007
27-Jan-2016	13:05:04	0.008	0.007
27-Jan-2016	13:09:04	0.006	0.006
27-Jan-2016	13:13:04	0.005	0.005
27-Jan-2016	13:17:04	0.004	0.004
27-Jan-2016	13:21:04	0.004	0.004
27-Jan-2016	13:25:04	0.005	0.004
27-Jan-2016	13:29:04	0.004	0.004
27-Jan-2016	13:33:04	0.003	0.003
27-Jan-2016	13:37:04	0.003	0.003
27-Jan-2016	13:41:04	0.003	0.003
27-Jan-2016	13:45:04	0.004	0.004
27-Jan-2016	13:49:04	0.005	0.004
27-Jan-2016	13:53:04	0.004	0.005
27-Jan-2016	13:57:04	0.005	0.005
27-Jan-2016	14:01:04	0.006	0.005
27-Jan-2016	14:05:04	0.005	0.005
27-Jan-2016	14:09:04	0.004	0.005
27-Jan-2016	14:13:04	0.005	0.004
27-Jan-2016	14:17:04	0.003	0.004
27-Jan-2016	14:21:04	0.003	0.003
27-Jan-2016	14:25:04	0.004	0.004
27-Jan-2016	14:29:04	0.005	0.005
27-Jan-2016	14:33:04	0.007	0.005
27-Jan-2016	14:37:04	0.004	0.005
27-Jan-2016	14:41:04	0.004	0.004
27-Jan-2016	14:45:04	0.004	0.004
27-Jan-2016	14:49:04	0.003	0.004
27-Jan-2016	14:53:04	0.004	0.003
27-Jan-2016	14:57:04	0.003	0.003
27-Jan-2016	15:01:04	0.003	0.003

DUST MONITORING

January 2016

shading indicates values over the threshold

Monitor: 2

Threshold: 0.15 (mg/m^3)

Date	Time	Value (mg/m^3)	TWA (mg/m^3)
27-Jan-2016	15:05:04	0.003	0.004
27-Jan-2016	15:09:04	0.006	0.005
27-Jan-2016	15:13:04	0.005	0.005
27-Jan-2016	15:17:04	0.004	0.004
27-Jan-2016	15:21:04	0.003	0.003
27-Jan-2016	15:25:04	0.003	0.003
27-Jan-2016	15:29:04	0.003	0.003
27-Jan-2016	15:33:04	0.004	0.003
27-Jan-2016	15:37:04	0.003	0.004
27-Jan-2016	15:41:04	0.004	0.004
27-Jan-2016	15:45:04	0.005	0.005
27-Jan-2016	16:38:40	0.006	0.006
27-Jan-2016	16:42:40	0.008	0.007
27-Jan-2016	16:46:40	0.007	0.008
27-Jan-2016	16:50:40	0.008	0.009
27-Jan-2016	16:54:40	0.013	0.011
27-Jan-2016	16:58:40	0.011	0.018
27-Jan-2016	17:02:40	0.029	0.020
27-Jan-2016	17:06:40	0.021	0.023
27-Jan-2016	17:10:40	0.020	0.020
27-Jan-2016	17:14:40	0.018	0.019
28-Jan-2016	08:38:34	0.035	0.034
28-Jan-2016	08:42:34	0.033	0.033
28-Jan-2016	08:46:34	0.031	0.034
28-Jan-2016	08:50:34	0.038	0.037
28-Jan-2016	08:54:34	0.041	0.042
28-Jan-2016	08:58:34	0.048	0.046
28-Jan-2016	09:02:34	0.048	0.047
28-Jan-2016	09:06:34	0.045	0.047
28-Jan-2016	09:10:34	0.049	0.046
28-Jan-2016	09:14:34	0.045	0.047
28-Jan-2016	09:18:34	0.048	0.047
28-Jan-2016	09:22:34	0.049	0.045
28-Jan-2016	09:26:34	0.039	0.041
28-Jan-2016	09:30:34	0.035	0.035
28-Jan-2016	09:34:34	0.032	0.032
28-Jan-2016	09:38:34	0.029	0.030
28-Jan-2016	09:42:34	0.029	0.030
28-Jan-2016	09:46:34	0.032	0.032
28-Jan-2016	09:50:34	0.036	0.035
28-Jan-2016	09:54:34	0.037	0.035

DUST MONITORING

January 2016

shading indicates values over the threshold

Monitor: 2

Threshold: 0.15 (mg/m^3)

Date	Time	Value (mg/m^3)	TWA (mg/m^3)
28-Jan-2016	09:58:34	0.033	0.033
28-Jan-2016	10:02:34	0.029	0.031
28-Jan-2016	10:06:34	0.032	0.031
28-Jan-2016	10:10:34	0.031	0.037
28-Jan-2016	10:14:34	0.048	0.035
28-Jan-2016	10:18:34	0.027	0.033
28-Jan-2016	10:22:34	0.025	0.026
28-Jan-2016	10:26:34	0.025	0.026
28-Jan-2016	10:30:34	0.029	0.027
28-Jan-2016	10:34:34	0.026	0.028
28-Jan-2016	10:38:34	0.029	0.028
28-Jan-2016	10:42:34	0.028	0.030
28-Jan-2016	10:46:34	0.032	0.029
28-Jan-2016	10:50:34	0.026	0.027
28-Jan-2016	10:54:34	0.024	0.025
28-Jan-2016	10:58:34	0.024	0.024
28-Jan-2016	11:02:34	0.024	0.023
28-Jan-2016	11:06:34	0.021	0.021
28-Jan-2016	11:10:34	0.019	0.020
28-Jan-2016	11:14:34	0.020	0.019
28-Jan-2016	11:18:34	0.017	0.018
28-Jan-2016	11:22:34	0.016	0.018
28-Jan-2016	11:26:34	0.022	0.018
28-Jan-2016	11:30:34	0.017	0.019
28-Jan-2016	11:34:34	0.017	0.015
28-Jan-2016	11:38:34	0.011	0.013
28-Jan-2016	11:42:34	0.012	0.011
28-Jan-2016	11:46:34	0.010	0.011
28-Jan-2016	11:50:34	0.012	0.012
28-Jan-2016	11:54:34	0.014	0.012
28-Jan-2016	11:58:34	0.009	0.010
28-Jan-2016	12:02:34	0.008	0.008
28-Jan-2016	12:06:34	0.007	0.007
28-Jan-2016	12:10:34	0.007	0.007
28-Jan-2016	12:14:34	0.007	0.007
28-Jan-2016	12:18:34	0.007	0.007
28-Jan-2016	12:22:34	0.008	0.007
28-Jan-2016	12:26:34	0.007	0.007
28-Jan-2016	12:30:34	0.007	0.007
28-Jan-2016	12:34:34	0.006	0.008
28-Jan-2016	12:38:34	0.011	0.008

DUST MONITORING

January 2016

shading indicates values over the threshold

Monitor: 2

Threshold: 0.15 (mg/m^3)

Date	Time	Value (mg/m^3)	TWA (mg/m^3)
28-Jan-2016	12:42:34	0.007	0.008
28-Jan-2016	12:46:34	0.006	0.007
28-Jan-2016	12:50:34	0.009	0.007
28-Jan-2016	12:54:34	0.006	0.006
28-Jan-2016	12:58:34	0.004	0.005
28-Jan-2016	13:02:34	0.006	0.006
28-Jan-2016	13:06:34	0.008	0.007
28-Jan-2016	13:10:34	0.008	0.007
28-Jan-2016	13:14:34	0.005	0.006
28-Jan-2016	13:18:34	0.004	0.005
28-Jan-2016	13:22:34	0.005	0.004
28-Jan-2016	13:26:34	0.004	0.006
28-Jan-2016	13:30:34	0.008	0.006
28-Jan-2016	13:34:34	0.006	0.007
28-Jan-2016	13:38:34	0.007	0.008
28-Jan-2016	14:15:27	0.010	0.008
28-Jan-2016	14:19:27	0.007	0.008
28-Jan-2016	14:23:27	0.006	0.007
28-Jan-2016	14:27:27	0.007	0.006
28-Jan-2016	14:31:27	0.004	0.007
28-Jan-2016	14:35:27	0.009	0.006
28-Jan-2016	14:39:27	0.004	0.004
28-Jan-2016	14:43:27	0.000	0.002
28-Jan-2016	14:47:27	0.002	0.001
28-Jan-2016	14:51:27	0.000	0.001
28-Jan-2016	14:55:27	0.000	0.000
28-Jan-2016	14:59:27	0.000	0.000
28-Jan-2016	15:03:27	0.000	0.000
28-Jan-2016	15:07:27	0.000	0.000
28-Jan-2016	15:11:27	0.000	0.003
28-Jan-2016	15:15:27	0.008	0.004
28-Jan-2016	15:19:27	0.005	0.006
28-Jan-2016	15:23:27	0.004	0.003
28-Jan-2016	15:27:27	0.001	0.002
28-Jan-2016	15:31:27	0.000	0.000
28-Jan-2016	15:35:27	0.000	0.000
28-Jan-2016	15:39:27	0.000	0.000
28-Jan-2016	15:43:27	0.001	0.001
28-Jan-2016	15:47:27	0.002	0.002
28-Jan-2016	15:51:27	0.003	0.002
28-Jan-2016	15:55:27	0.002	0.002

DUST MONITORING

January 2016

shading indicates values over the threshold

Monitor: 2

Threshold: 0.15 (mg/m^3)

Date	Time	Value (mg/m^3)	TWA (mg/m^3)
28-Jan-2016	15:59:27	0.001	0.001
28-Jan-2016	16:03:27	0.001	0.001
28-Jan-2016	16:07:27	0.001	0.001
28-Jan-2016	16:11:27	0.001	0.001
28-Jan-2016	16:15:27	0.001	0.002
28-Jan-2016	16:19:27	0.003	0.005
28-Jan-2016	16:23:27	0.010	0.007
28-Jan-2016	16:27:27	0.007	0.007
28-Jan-2016	16:31:27	0.004	0.005
28-Jan-2016	16:35:27	0.003	0.003
28-Jan-2016	16:39:27	0.001	0.002
28-Jan-2016	16:43:27	0.001	0.001
28-Jan-2016	16:47:27	0.001	0.001
29-Jan-2016	09:18:47	0.015	0.016
29-Jan-2016	09:22:47	0.016	0.016
29-Jan-2016	09:26:47	0.017	0.017
29-Jan-2016	09:30:47	0.018	0.018
29-Jan-2016	09:34:47	0.018	0.018
29-Jan-2016	09:38:47	0.017	0.019
29-Jan-2016	09:42:47	0.023	0.032
29-Jan-2016	09:46:47	0.055	0.036
29-Jan-2016	09:50:47	0.029	0.039
29-Jan-2016	09:54:47	0.034	0.034
29-Jan-2016	09:58:47	0.038	0.032
29-Jan-2016	10:02:47	0.024	0.028
29-Jan-2016	10:06:47	0.023	0.021
29-Jan-2016	10:10:47	0.017	0.019
29-Jan-2016	10:14:47	0.016	0.017
29-Jan-2016	10:18:47	0.017	0.018
29-Jan-2016	10:22:47	0.020	0.019
29-Jan-2016	10:26:47	0.019	0.020
29-Jan-2016	10:30:47	0.020	0.019
29-Jan-2016	10:34:47	0.019	0.018
29-Jan-2016	10:38:47	0.016	0.018
29-Jan-2016	10:42:47	0.020	0.020
29-Jan-2016	10:46:47	0.025	0.020
29-Jan-2016	10:50:47	0.016	0.019
29-Jan-2016	10:54:47	0.016	0.016
29-Jan-2016	10:58:47	0.015	0.016
29-Jan-2016	11:02:47	0.017	0.016
29-Jan-2016	11:06:47	0.016	0.016

DUST MONITORING

January 2016

shading indicates values over the threshold

Monitor: 2

Threshold: 0.15 (mg/m^3)

Date	Time	Value (mg/m^3)	TWA (mg/m^3)
29-Jan-2016	11:10:47	0.016	0.016
29-Jan-2016	11:14:47	0.017	0.017
29-Jan-2016	11:18:47	0.018	0.017
29-Jan-2016	11:22:47	0.015	0.016
29-Jan-2016	11:26:47	0.014	0.014
29-Jan-2016	11:30:47	0.013	0.013
29-Jan-2016	11:34:47	0.013	0.014
29-Jan-2016	11:38:47	0.017	0.015
29-Jan-2016	11:42:47	0.015	0.015
29-Jan-2016	11:46:47	0.012	0.014
29-Jan-2016	11:50:47	0.014	0.012
29-Jan-2016	11:54:47	0.010	0.010
29-Jan-2016	11:58:47	0.007	0.008
29-Jan-2016	12:02:47	0.008	0.007
29-Jan-2016	12:06:47	0.007	0.008
29-Jan-2016	12:10:47	0.009	0.009
29-Jan-2016	12:14:47	0.010	0.010
29-Jan-2016	12:18:47	0.010	0.011
29-Jan-2016	12:22:47	0.012	0.012
29-Jan-2016	12:26:47	0.014	0.013
29-Jan-2016	12:30:47	0.014	0.014
29-Jan-2016	12:34:47	0.014	0.014
29-Jan-2016	12:38:47	0.014	0.015
29-Jan-2016	12:42:47	0.016	0.014
29-Jan-2016	12:46:47	0.013	0.012
29-Jan-2016	12:50:47	0.008	0.009
29-Jan-2016	12:54:47	0.007	0.008
29-Jan-2016	12:58:47	0.008	0.008
29-Jan-2016	13:02:47	0.008	0.008
29-Jan-2016	13:06:47	0.008	0.008
29-Jan-2016	13:10:47	0.007	0.007
29-Jan-2016	13:14:47	0.007	0.007
29-Jan-2016	13:18:47	0.007	0.007
29-Jan-2016	13:22:47	0.008	0.008
29-Jan-2016	13:26:47	0.009	0.008
29-Jan-2016	13:30:47	0.008	0.009
29-Jan-2016	13:34:47	0.010	0.009
29-Jan-2016	13:38:47	0.009	0.009
29-Jan-2016	13:42:47	0.009	0.009
29-Jan-2016	13:46:47	0.009	0.009
29-Jan-2016	13:50:47	0.008	0.009

DUST MONITORING

January 2016

shading indicates values over the threshold

Monitor: 2

Threshold: 0.15 (mg/m^3)

Date	Time	Value (mg/m^3)	TWA (mg/m^3)
29-Jan-2016	13:54:47	0.010	0.009
29-Jan-2016	13:58:47	0.010	0.012
29-Jan-2016	14:02:47	0.015	0.012
29-Jan-2016	14:06:47	0.011	0.013
29-Jan-2016	14:10:47	0.014	0.012
29-Jan-2016	14:14:47	0.011	0.012
29-Jan-2016	14:18:47	0.011	0.010
29-Jan-2016	14:22:47	0.009	0.009
29-Jan-2016	14:26:47	0.007	0.008
29-Jan-2016	14:30:47	0.008	0.008
29-Jan-2016	14:34:47	0.008	0.009
29-Jan-2016	14:38:47	0.010	0.009
29-Jan-2016	14:42:47	0.009	0.010
29-Jan-2016	14:46:47	0.011	0.010
29-Jan-2016	14:50:47	0.011	0.011
29-Jan-2016	14:54:47	0.012	0.012
29-Jan-2016	14:58:47	0.013	0.012
29-Jan-2016	15:02:47	0.011	0.011
29-Jan-2016	15:06:47	0.008	0.010
29-Jan-2016	15:10:47	0.010	0.009
29-Jan-2016	15:14:47	0.009	0.009
29-Jan-2016	15:18:47	0.009	0.010
29-Jan-2016	15:22:47	0.012	0.011
29-Jan-2016	15:26:47	0.011	0.011
29-Jan-2016	15:30:47	0.010	0.010
29-Jan-2016	15:34:47	0.009	0.009
29-Jan-2016	15:38:47	0.009	0.009
29-Jan-2016	15:42:47	0.009	0.010
29-Jan-2016	15:46:47	0.011	0.011
29-Jan-2016	15:50:47	0.014	0.012
29-Jan-2016	15:54:47	0.010	0.014
29-Jan-2016	15:58:47	0.017	0.015
29-Jan-2016	16:02:47	0.019	0.018
29-Jan-2016	16:06:47	0.019	0.021
29-Jan-2016	16:10:47	0.025	0.021
29-Jan-2016	16:14:47	0.020	0.023
29-Jan-2016	16:18:47	0.023	0.022

DUST MONITORING

January 2016

shading indicates values over the threshold

Monitor: 3

Threshold: 0.15 (mg/m^3)

Date	Time	Value (mg/m^3)	TWA (mg/m^3)
5-Jan-2016	09:17:32	0.001	0.004
5-Jan-2016	09:21:32	0.007	0.003
5-Jan-2016	09:25:32	0.000	0.002
5-Jan-2016	09:29:32	0.000	0.000
5-Jan-2016	09:33:32	0.000	0.000
5-Jan-2016	09:37:32	0.000	0.000
5-Jan-2016	09:41:32	0.000	0.000
5-Jan-2016	09:45:32	0.000	0.000
5-Jan-2016	09:49:32	0.000	0.001
5-Jan-2016	09:53:32	0.003	0.001
5-Jan-2016	09:57:32	0.000	0.001
5-Jan-2016	10:01:32	0.000	0.000
5-Jan-2016	10:05:32	0.000	0.001
5-Jan-2016	10:09:32	0.004	0.002
5-Jan-2016	10:13:32	0.003	0.003
5-Jan-2016	10:17:32	0.001	0.003
5-Jan-2016	10:21:32	0.004	0.003
5-Jan-2016	10:25:32	0.004	0.003
5-Jan-2016	10:29:32	0.000	0.001
5-Jan-2016	10:33:32	0.000	0.000
5-Jan-2016	10:37:32	0.000	0.000
5-Jan-2016	10:41:32	0.000	0.000
5-Jan-2016	10:45:32	0.000	0.000
5-Jan-2016	10:49:32	0.000	0.001
5-Jan-2016	10:53:32	0.002	0.001
5-Jan-2016	10:57:32	0.000	0.001
5-Jan-2016	11:01:32	0.000	0.000
5-Jan-2016	11:05:32	0.000	0.000
5-Jan-2016	11:09:32	0.000	0.000
5-Jan-2016	11:13:32	0.001	0.000
5-Jan-2016	11:17:32	0.000	0.000
5-Jan-2016	11:21:32	0.000	0.000
5-Jan-2016	11:25:32	0.000	0.000
5-Jan-2016	11:29:32	0.000	0.000
5-Jan-2016	11:33:32	0.001	0.002
5-Jan-2016	11:37:32	0.004	0.005
5-Jan-2016	11:41:32	0.009	0.004
5-Jan-2016	11:45:32	0.000	0.003
5-Jan-2016	11:49:32	0.000	0.000
5-Jan-2016	11:53:32	0.001	0.000
5-Jan-2016	11:57:32	0.000	0.000

DUST MONITORING

January 2016

shading indicates values over the threshold

Monitor: 3

Threshold: 0.15 (mg/m^3)

Date	Time	Value (mg/m^3)	TWA (mg/m^3)
5-Jan-2016	12:01:32	0.000	0.000
5-Jan-2016	12:05:32	0.000	0.000
5-Jan-2016	12:09:32	0.000	0.000
5-Jan-2016	12:13:32	0.000	0.000
5-Jan-2016	12:17:32	0.000	0.000
5-Jan-2016	12:21:32	0.000	0.000
5-Jan-2016	12:25:32	0.000	0.000
5-Jan-2016	12:29:32	0.000	0.000
5-Jan-2016	12:33:32	0.000	0.000
5-Jan-2016	12:37:32	0.000	0.000
5-Jan-2016	12:41:32	0.000	0.000
5-Jan-2016	12:45:32	0.000	0.000
5-Jan-2016	12:49:32	0.000	0.000
5-Jan-2016	12:53:32	0.000	0.000
5-Jan-2016	12:57:32	0.000	0.000
5-Jan-2016	13:01:32	0.000	0.000
5-Jan-2016	13:05:32	0.001	0.000
5-Jan-2016	13:09:32	0.000	0.000
5-Jan-2016	13:13:32	0.000	0.000
5-Jan-2016	13:17:32	0.000	0.000
5-Jan-2016	13:21:32	0.000	0.000
5-Jan-2016	13:25:32	0.000	0.000
5-Jan-2016	13:29:32	0.000	0.000
5-Jan-2016	13:33:32	0.000	0.000
5-Jan-2016	13:37:32	0.000	0.000
5-Jan-2016	13:41:32	0.000	0.000
5-Jan-2016	13:45:32	0.001	0.000
5-Jan-2016	13:49:32	0.000	0.000
5-Jan-2016	13:53:32	0.000	0.000
5-Jan-2016	13:57:32	0.000	0.000
5-Jan-2016	14:01:32	0.000	0.000
5-Jan-2016	14:05:32	0.000	0.000
5-Jan-2016	14:09:32	0.000	0.000
5-Jan-2016	14:13:32	0.000	0.001
5-Jan-2016	14:17:32	0.002	0.001
5-Jan-2016	14:21:32	0.000	0.001
5-Jan-2016	14:25:32	0.000	0.000
5-Jan-2016	14:29:32	0.000	0.000
5-Jan-2016	14:33:32	0.000	0.001
5-Jan-2016	14:37:32	0.002	0.001
5-Jan-2016	14:41:32	0.002	0.001

DUST MONITORING

January 2016

shading indicates values over the threshold

Monitor: 3

Threshold: 0.15 (mg/m^3)

Date	Time	Value (mg/m^3)	TWA (mg/m^3)
5-Jan-2016	14:45:32	0.000	0.006
5-Jan-2016	14:49:32	0.015	0.005
5-Jan-2016	14:53:32	0.001	0.006
5-Jan-2016	14:57:32	0.003	0.001
5-Jan-2016	15:01:32	0.000	0.005
5-Jan-2016	15:05:32	0.013	0.005
5-Jan-2016	15:09:32	0.001	0.010
5-Jan-2016	15:13:32	0.015	0.008
5-Jan-2016	15:17:32	0.007	0.017
5-Jan-2016	15:21:32	0.030	0.014
5-Jan-2016	15:25:32	0.005	0.015
5-Jan-2016	15:29:32	0.010	0.008
5-Jan-2016	15:33:32	0.008	0.006
5-Jan-2016	15:37:32	0.001	0.003
5-Jan-2016	15:41:32	0.001	0.001
5-Jan-2016	15:45:32	0.000	0.007
5-Jan-2016	15:49:32	0.021	0.007
5-Jan-2016	15:53:32	0.000	0.007
5-Jan-2016	15:57:32	0.001	0.000
5-Jan-2016	16:01:32	0.000	0.007
5-Jan-2016	16:05:32	0.019	0.010
5-Jan-2016	16:09:32	0.010	0.010
5-Jan-2016	16:13:32	0.000	0.004
5-Jan-2016	16:17:32	0.001	0.001
5-Jan-2016	16:21:32	0.002	0.002
5-Jan-2016	16:25:32	0.002	0.001
5-Jan-2016	16:29:32	0.000	0.001
5-Jan-2016	16:33:32	0.000	0.000
5-Jan-2016	16:37:32	0.000	0.000
5-Jan-2016	16:41:32	0.000	0.000
5-Jan-2016	16:45:32	0.000	0.000
5-Jan-2016	16:49:32	0.001	0.000
5-Jan-2016	16:53:32	0.000	0.009
5-Jan-2016	16:57:32	0.025	0.010
5-Jan-2016	17:01:32	0.005	0.010
5-Jan-2016	17:05:32	0.000	0.002
5-Jan-2016	17:09:32	0.000	0.000
5-Jan-2016	17:13:32	0.001	0.000
5-Jan-2016	17:17:32	0.000	0.000
5-Jan-2016	17:21:32	0.000	0.000
5-Jan-2016	17:25:32	0.000	0.000

DUST MONITORING

January 2016

shading indicates values over the threshold

Monitor: 3

Threshold: 0.15 (mg/m^3)

Date	Time	Value (mg/m^3)	TWA (mg/m^3)
6-Jan-2016	10:21:56	0.002	0.002
6-Jan-2016	10:25:56	0.001	0.001
6-Jan-2016	10:29:56	0.001	0.001
6-Jan-2016	10:33:56	0.001	0.001
6-Jan-2016	10:37:56	0.000	0.000
6-Jan-2016	10:41:56	0.000	0.000
6-Jan-2016	10:45:56	0.001	0.001
6-Jan-2016	10:49:56	0.001	0.001
6-Jan-2016	10:53:56	0.001	0.001
6-Jan-2016	10:57:56	0.001	0.001
6-Jan-2016	11:01:56	0.001	0.001
6-Jan-2016	11:05:56	0.001	0.001
6-Jan-2016	11:09:56	0.001	0.001
6-Jan-2016	11:13:56	0.001	0.001
6-Jan-2016	11:17:56	0.001	0.001
6-Jan-2016	11:21:56	0.000	0.001
6-Jan-2016	11:25:56	0.001	0.001
6-Jan-2016	11:29:56	0.001	0.001
6-Jan-2016	11:33:56	0.001	0.001
6-Jan-2016	11:37:56	0.001	0.001
6-Jan-2016	11:41:56	0.001	0.001
6-Jan-2016	11:45:56	0.001	0.001
6-Jan-2016	11:49:56	0.001	0.001
6-Jan-2016	11:53:56	0.001	0.001
6-Jan-2016	11:57:56	0.001	0.001
6-Jan-2016	12:01:56	0.001	0.001
6-Jan-2016	12:05:56	0.001	0.001
6-Jan-2016	12:09:56	0.001	0.001
6-Jan-2016	12:13:56	0.001	0.001
6-Jan-2016	12:17:56	0.001	0.001
6-Jan-2016	12:21:56	0.001	0.001
6-Jan-2016	12:25:56	0.002	0.001
6-Jan-2016	12:29:56	0.001	0.001
6-Jan-2016	12:33:56	0.001	0.001
6-Jan-2016	12:37:56	0.001	0.001
6-Jan-2016	12:41:56	0.002	0.002
6-Jan-2016	12:45:56	0.002	0.002
6-Jan-2016	12:49:56	0.001	0.001
6-Jan-2016	12:53:56	0.001	0.001
6-Jan-2016	12:57:56	0.001	0.001
6-Jan-2016	13:01:56	0.001	0.001

DUST MONITORING

January 2016

shading indicates values over the threshold

Monitor: 3

Threshold: 0.15 (mg/m^3)

Date	Time	Value (mg/m^3)	TWA (mg/m^3)
6-Jan-2016	13:05:56	0.001	0.001
6-Jan-2016	13:09:56	0.002	0.001
6-Jan-2016	13:13:56	0.001	0.002
6-Jan-2016	13:17:56	0.002	0.002
6-Jan-2016	13:21:56	0.002	0.002
6-Jan-2016	13:25:56	0.001	0.002
6-Jan-2016	13:29:56	0.002	0.002
6-Jan-2016	13:33:56	0.002	0.003
6-Jan-2016	13:37:56	0.006	0.003
6-Jan-2016	13:41:56	0.002	0.003
6-Jan-2016	13:45:56	0.001	0.001
6-Jan-2016	13:49:56	0.001	0.002
6-Jan-2016	13:53:56	0.003	0.002
6-Jan-2016	13:57:56	0.002	0.002
6-Jan-2016	14:01:56	0.001	0.001
6-Jan-2016	14:05:56	0.001	0.001
6-Jan-2016	14:09:56	0.001	0.001
6-Jan-2016	14:13:56	0.001	0.001
6-Jan-2016	14:17:56	0.001	0.001
6-Jan-2016	14:21:56	0.001	0.001
6-Jan-2016	14:25:56	0.000	0.000
6-Jan-2016	14:29:56	0.000	0.000
6-Jan-2016	14:33:56	0.000	0.000
6-Jan-2016	14:37:56	0.000	0.000
6-Jan-2016	14:41:56	0.000	0.000
6-Jan-2016	14:45:56	0.000	0.000
6-Jan-2016	14:49:56	0.000	0.000
6-Jan-2016	14:53:56	0.000	0.000
6-Jan-2016	14:57:56	0.000	0.000
6-Jan-2016	15:01:56	0.000	0.000
6-Jan-2016	15:05:56	0.001	0.000
6-Jan-2016	15:09:56	0.000	0.001
6-Jan-2016	15:13:56	0.003	0.001
6-Jan-2016	15:17:56	0.000	0.001
6-Jan-2016	15:21:56	0.000	0.000
6-Jan-2016	15:25:56	0.000	0.000
6-Jan-2016	15:29:56	0.000	0.000
6-Jan-2016	15:33:56	0.000	0.000
6-Jan-2016	15:37:56	0.000	0.000
6-Jan-2016	15:41:56	0.000	0.000
6-Jan-2016	15:45:56	0.000	0.000

DUST MONITORING

January 2016

shading indicates values over the threshold

Monitor: 3

Threshold: 0.15 (mg/m^3)

Date	Time	Value (mg/m^3)	TWA (mg/m^3)
6-Jan-2016	15:49:56	0.000	0.000
6-Jan-2016	15:53:56	0.000	0.000
6-Jan-2016	15:57:56	0.000	0.000
6-Jan-2016	16:01:56	0.001	0.000
6-Jan-2016	16:05:56	0.000	0.000
6-Jan-2016	16:09:56	0.000	0.000
6-Jan-2016	16:13:56	0.000	0.000
11-Jan-2016	09:06:45	0.005	0.005
11-Jan-2016	09:10:45	0.004	0.004
11-Jan-2016	09:14:45	0.004	0.003
11-Jan-2016	09:18:45	0.002	0.003
11-Jan-2016	09:22:45	0.003	0.003
11-Jan-2016	09:26:45	0.003	0.003
11-Jan-2016	09:30:45	0.003	0.003
11-Jan-2016	09:34:45	0.002	0.002
11-Jan-2016	09:38:45	0.001	0.002
11-Jan-2016	09:42:45	0.004	0.016
11-Jan-2016	09:46:45	0.043	0.016
11-Jan-2016	09:50:45	0.002	0.015
11-Jan-2016	09:54:45	0.001	0.002
11-Jan-2016	09:58:45	0.002	0.002
11-Jan-2016	10:02:45	0.002	0.001
11-Jan-2016	10:06:45	0.000	0.001
11-Jan-2016	10:10:45	0.000	0.000
11-Jan-2016	10:14:45	0.000	0.000
11-Jan-2016	10:18:45	0.001	0.000
11-Jan-2016	10:22:45	0.000	0.003
11-Jan-2016	10:26:45	0.008	0.003
11-Jan-2016	10:30:45	0.000	0.003
11-Jan-2016	10:34:45	0.001	0.001
11-Jan-2016	10:38:45	0.001	0.016
11-Jan-2016	10:42:45	0.045	0.017
11-Jan-2016	10:46:45	0.005	0.017
11-Jan-2016	10:50:45	0.001	0.002
11-Jan-2016	10:54:45	0.001	0.001
11-Jan-2016	10:58:45	0.001	0.001
11-Jan-2016	11:02:45	0.001	0.001
11-Jan-2016	11:06:45	0.001	0.001
11-Jan-2016	11:10:45	0.001	0.001
11-Jan-2016	11:14:45	0.001	0.001
11-Jan-2016	11:18:45	0.002	0.001

DUST MONITORING

January 2016

shading indicates values over the threshold

Monitor: 3

Threshold: 0.15 (mg/m^3)

Date	Time	Value (mg/m^3)	TWA (mg/m^3)
11-Jan-2016	11:22:45	0.001	0.001
11-Jan-2016	11:26:45	0.001	0.001
11-Jan-2016	11:30:45	0.001	0.001
11-Jan-2016	11:34:45	0.002	0.002
11-Jan-2016	11:38:45	0.002	0.002
11-Jan-2016	11:42:45	0.003	0.002
11-Jan-2016	11:46:45	0.001	0.002
11-Jan-2016	11:50:45	0.003	0.002
11-Jan-2016	11:54:45	0.001	0.001
11-Jan-2016	11:58:45	0.000	0.000
11-Jan-2016	12:02:45	0.000	0.000
11-Jan-2016	12:06:45	0.000	0.000
11-Jan-2016	12:10:45	0.001	0.000
11-Jan-2016	12:14:45	0.000	0.000
11-Jan-2016	12:18:45	0.000	0.001
11-Jan-2016	12:22:45	0.002	0.001
11-Jan-2016	12:26:45	0.000	0.001
11-Jan-2016	12:30:45	0.000	0.000
11-Jan-2016	12:34:45	0.001	0.000
11-Jan-2016	12:38:45	0.000	0.001
11-Jan-2016	12:42:45	0.001	0.000
11-Jan-2016	12:46:45	0.000	0.001
11-Jan-2016	12:50:45	0.001	0.000
11-Jan-2016	12:54:45	0.000	0.002
11-Jan-2016	12:58:45	0.005	0.002
11-Jan-2016	13:02:45	0.000	0.006
11-Jan-2016	13:06:45	0.012	0.004
11-Jan-2016	13:10:45	0.000	0.004
11-Jan-2016	13:14:45	0.000	0.000
11-Jan-2016	13:18:45	0.001	0.001
11-Jan-2016	13:22:45	0.002	0.005
11-Jan-2016	13:26:45	0.012	0.005
11-Jan-2016	13:30:45	0.000	0.004
11-Jan-2016	13:34:45	0.000	0.000
11-Jan-2016	13:38:45	0.000	0.000
11-Jan-2016	13:42:45	0.000	0.000
11-Jan-2016	13:46:45	0.000	0.005
11-Jan-2016	13:50:45	0.016	0.010
11-Jan-2016	13:54:45	0.014	0.010
11-Jan-2016	13:58:45	0.000	0.005
11-Jan-2016	14:02:45	0.000	0.000

DUST MONITORING

January 2016

shading indicates values over the threshold

Monitor: 3

Threshold: 0.15 (mg/m^3)

Date	Time	Value (mg/m^3)	TWA (mg/m^3)
11-Jan-2016	14:06:45	0.000	0.000
11-Jan-2016	14:10:45	0.000	0.000
11-Jan-2016	14:14:45	0.000	0.000
11-Jan-2016	14:18:45	0.000	0.000
11-Jan-2016	14:22:45	0.000	0.005
11-Jan-2016	14:26:45	0.014	0.005
11-Jan-2016	14:30:45	0.000	0.005
11-Jan-2016	14:34:45	0.000	0.000
11-Jan-2016	14:38:45	0.000	0.000
11-Jan-2016	14:42:45	0.000	0.000
11-Jan-2016	14:46:45	0.001	0.000
11-Jan-2016	14:50:45	0.000	0.003
11-Jan-2016	14:54:45	0.009	0.021
11-Jan-2016	14:58:45	0.055	0.021
11-Jan-2016	15:02:45	0.000	0.019
11-Jan-2016	15:06:45	0.002	0.001
11-Jan-2016	15:10:45	0.002	0.003
11-Jan-2016	15:14:45	0.004	0.002
11-Jan-2016	15:18:45	0.000	0.002
11-Jan-2016	15:22:45	0.001	0.001
11-Jan-2016	15:26:45	0.001	0.001
11-Jan-2016	15:30:45	0.001	0.001
11-Jan-2016	15:34:45	0.001	0.004
11-Jan-2016	15:38:45	0.011	0.004
11-Jan-2016	15:42:45	0.000	0.007
11-Jan-2016	15:46:45	0.010	0.004
11-Jan-2016	15:50:45	0.002	0.005
11-Jan-2016	15:54:45	0.002	0.001
11-Jan-2016	15:58:45	0.000	0.001
11-Jan-2016	16:02:45	0.001	0.001
11-Jan-2016	16:06:45	0.002	0.002
11-Jan-2016	16:10:45	0.002	0.002
11-Jan-2016	16:14:45	0.001	0.001
11-Jan-2016	16:18:45	0.000	0.001
11-Jan-2016	16:22:45	0.001	0.001
11-Jan-2016	16:26:45	0.001	0.001
11-Jan-2016	16:30:45	0.001	0.001
11-Jan-2016	16:34:45	0.001	0.001
11-Jan-2016	16:38:45	0.001	0.001
11-Jan-2016	16:42:45	0.002	0.002
11-Jan-2016	16:46:45	0.002	0.002

DUST MONITORING

January 2016

shading indicates values over the threshold

Monitor: 3

Threshold: 0.15 (mg/m^3)

Date	Time	Value (mg/m^3)	TWA (mg/m^3)
11-Jan-2016	16:50:45	0.001	0.001
11-Jan-2016	16:54:45	0.001	0.001
11-Jan-2016	16:58:45	0.000	0.001
11-Jan-2016	17:02:45	0.001	0.001
11-Jan-2016	17:06:45	0.001	0.001
11-Jan-2016	17:10:45	0.001	0.002
11-Jan-2016	17:14:45	0.005	0.002
11-Jan-2016	17:18:45	0.001	0.003
12-Jan-2016	08:30:25	0.015	0.008
12-Jan-2016	08:34:25	0.001	0.013
12-Jan-2016	08:38:25	0.023	0.008
12-Jan-2016	08:42:25	0.001	0.010
12-Jan-2016	08:46:25	0.006	0.008
12-Jan-2016	08:50:25	0.017	0.008
12-Jan-2016	08:54:25	0.001	0.006
12-Jan-2016	08:58:25	0.001	0.001
12-Jan-2016	09:02:25	0.001	0.002
12-Jan-2016	09:06:25	0.005	0.002
12-Jan-2016	09:10:25	0.001	0.002
12-Jan-2016	09:14:25	0.001	0.001
12-Jan-2016	09:18:25	0.002	0.001
12-Jan-2016	09:22:25	0.001	0.001
12-Jan-2016	09:26:25	0.001	0.001
12-Jan-2016	09:30:25	0.001	0.001
13-Jan-2016	09:41:14	0.003	0.002
13-Jan-2016	09:45:14	0.001	0.002
13-Jan-2016	09:49:14	0.003	0.002
13-Jan-2016	09:53:14	0.002	0.002
13-Jan-2016	09:57:14	0.002	0.001
13-Jan-2016	10:01:14	0.000	0.003
13-Jan-2016	10:05:14	0.006	0.004
13-Jan-2016	10:09:14	0.007	0.009
13-Jan-2016	10:13:14	0.014	0.024
13-Jan-2016	10:17:14	0.052	0.024
13-Jan-2016	10:21:14	0.005	0.020
13-Jan-2016	10:25:14	0.003	0.004
13-Jan-2016	10:29:14	0.003	0.003
13-Jan-2016	10:33:14	0.004	0.004
13-Jan-2016	10:37:14	0.004	0.004
13-Jan-2016	10:41:14	0.003	0.006
13-Jan-2016	10:45:14	0.011	0.007

DUST MONITORING

January 2016

shading indicates values over the threshold

Monitor: 3

Threshold: 0.15 (mg/m^3)

Date	Time	Value (mg/m^3)	TWA (mg/m^3)
13-Jan-2016	10:49:14	0.006	0.006
13-Jan-2016	10:53:14	0.002	0.004
13-Jan-2016	10:57:14	0.003	0.003
13-Jan-2016	11:01:14	0.005	0.004
13-Jan-2016	11:05:14	0.004	0.004
13-Jan-2016	11:09:14	0.004	0.004
13-Jan-2016	11:13:14	0.005	0.004
13-Jan-2016	11:17:14	0.004	0.004
13-Jan-2016	11:21:14	0.003	0.004
13-Jan-2016	11:25:14	0.006	0.005
13-Jan-2016	11:29:14	0.006	0.006
13-Jan-2016	11:33:14	0.005	0.005
13-Jan-2016	11:37:14	0.005	0.005
13-Jan-2016	11:41:14	0.005	0.005
13-Jan-2016	11:45:14	0.006	0.006
13-Jan-2016	11:49:14	0.007	0.007
13-Jan-2016	11:53:14	0.007	0.007
13-Jan-2016	11:57:14	0.006	0.007
13-Jan-2016	12:01:14	0.008	0.007
13-Jan-2016	12:05:14	0.006	0.007
13-Jan-2016	12:09:14	0.006	0.006
13-Jan-2016	12:13:14	0.005	0.006
13-Jan-2016	12:17:14	0.007	0.006
13-Jan-2016	12:21:14	0.006	0.006
13-Jan-2016	12:25:14	0.004	0.004
13-Jan-2016	12:29:14	0.003	0.003
13-Jan-2016	12:33:14	0.003	0.003
13-Jan-2016	12:37:14	0.004	0.003
13-Jan-2016	12:41:14	0.003	0.003
13-Jan-2016	12:45:14	0.003	0.003
13-Jan-2016	12:49:14	0.004	0.005
13-Jan-2016	12:53:14	0.007	0.004
13-Jan-2016	12:57:14	0.002	0.003
13-Jan-2016	13:01:14	0.001	0.001
13-Jan-2016	13:05:14	0.001	0.001
13-Jan-2016	13:09:14	0.001	0.001
13-Jan-2016	13:13:14	0.001	0.002
13-Jan-2016	13:17:14	0.003	0.002
13-Jan-2016	13:21:14	0.002	0.002
13-Jan-2016	13:25:14	0.002	0.002
13-Jan-2016	13:29:14	0.002	0.002

DUST MONITORING

January 2016

shading indicates values over the threshold

Monitor: 3

Threshold: 0.15 (mg/m^3)

Date	Time	Value (mg/m^3)	TWA (mg/m^3)
13-Jan-2016	13:33:14	0.002	0.003
13-Jan-2016	13:37:14	0.004	0.003
13-Jan-2016	13:41:14	0.003	0.004
13-Jan-2016	13:45:14	0.005	0.004
13-Jan-2016	13:49:14	0.003	0.003
13-Jan-2016	13:53:14	0.001	0.002
13-Jan-2016	13:57:14	0.001	0.007
13-Jan-2016	14:01:14	0.020	0.007
13-Jan-2016	14:05:14	0.001	0.007
13-Jan-2016	14:09:14	0.000	0.001
13-Jan-2016	14:13:14	0.003	0.003
13-Jan-2016	14:17:14	0.005	0.004
13-Jan-2016	14:21:14	0.003	0.005
13-Jan-2016	14:25:14	0.007	0.007
13-Jan-2016	14:29:14	0.010	0.009
13-Jan-2016	14:33:14	0.009	0.009
13-Jan-2016	14:37:14	0.008	0.008
13-Jan-2016	14:41:14	0.007	0.007
13-Jan-2016	14:45:14	0.006	0.006
13-Jan-2016	14:49:14	0.006	0.006
13-Jan-2016	14:53:14	0.006	0.006
13-Jan-2016	14:57:14	0.005	0.006
13-Jan-2016	15:01:14	0.007	0.005
13-Jan-2016	15:05:14	0.002	0.004
13-Jan-2016	15:09:14	0.002	0.002
13-Jan-2016	15:13:14	0.001	0.002
13-Jan-2016	15:17:14	0.004	0.003
13-Jan-2016	15:21:14	0.005	0.004
13-Jan-2016	15:25:14	0.003	0.003
13-Jan-2016	15:29:14	0.002	0.004
13-Jan-2016	15:33:14	0.007	0.004
13-Jan-2016	15:37:14	0.004	0.004
13-Jan-2016	15:41:14	0.001	0.002
13-Jan-2016	15:45:14	0.002	0.001
13-Jan-2016	15:49:14	0.001	0.001
13-Jan-2016	15:53:14	0.001	0.001
13-Jan-2016	15:57:14	0.001	0.001
13-Jan-2016	16:01:14	0.001	0.001
13-Jan-2016	16:05:14	0.001	0.001
13-Jan-2016	16:09:14	0.001	0.001
13-Jan-2016	16:13:14	0.001	0.001

DUST MONITORING

January 2016

shading indicates values over the threshold

Monitor: 3

Threshold: 0.15 (mg/m^3)

Date	Time	Value (mg/m^3)	TWA (mg/m^3)
13-Jan-2016	16:17:14	0.001	0.001
13-Jan-2016	16:21:14	0.001	0.002
13-Jan-2016	16:25:14	0.003	0.002
14-Jan-2016	08:50:30	0.002	0.003
14-Jan-2016	08:54:30	0.004	0.004
14-Jan-2016	08:58:30	0.005	0.003
14-Jan-2016	09:02:30	0.000	0.002
14-Jan-2016	09:06:30	0.000	0.001
14-Jan-2016	09:10:30	0.003	0.003
14-Jan-2016	09:14:30	0.005	0.004
14-Jan-2016	09:18:30	0.003	0.003
14-Jan-2016	09:22:30	0.000	0.001
14-Jan-2016	09:26:30	0.000	0.000
14-Jan-2016	09:30:30	0.000	0.001
14-Jan-2016	09:34:30	0.003	0.002
14-Jan-2016	09:38:30	0.003	0.002
14-Jan-2016	09:42:30	0.001	0.001
14-Jan-2016	09:46:30	0.000	0.000
14-Jan-2016	09:50:30	0.000	0.001
14-Jan-2016	09:54:30	0.003	0.001
14-Jan-2016	09:58:30	0.000	0.001
14-Jan-2016	10:02:30	0.000	0.000
14-Jan-2016	10:06:30	0.000	0.000
14-Jan-2016	10:10:30	0.001	0.001
14-Jan-2016	10:14:30	0.001	0.001
14-Jan-2016	10:18:30	0.001	0.002
14-Jan-2016	10:22:30	0.005	0.004
14-Jan-2016	10:26:30	0.006	0.005
14-Jan-2016	10:30:30	0.005	0.006
14-Jan-2016	10:34:30	0.007	0.006
14-Jan-2016	10:38:30	0.007	0.007
14-Jan-2016	10:42:30	0.006	0.006
14-Jan-2016	10:46:30	0.005	0.005
14-Jan-2016	10:50:30	0.004	0.005
14-Jan-2016	10:54:30	0.005	0.005
14-Jan-2016	10:58:30	0.005	0.005
14-Jan-2016	11:02:30	0.006	0.007
14-Jan-2016	11:06:30	0.011	0.013
14-Jan-2016	11:10:30	0.021	0.016
14-Jan-2016	11:14:30	0.015	0.017
14-Jan-2016	11:18:30	0.014	0.015

DUST MONITORING

January 2016

shading indicates values over the threshold

Monitor: 3

Threshold: 0.15 (mg/m^3)

Date	Time	Value (mg/m^3)	TWA (mg/m^3)
14-Jan-2016	11:22:30	0.017	0.014
14-Jan-2016	11:26:30	0.010	0.011
14-Jan-2016	11:30:30	0.006	0.008
14-Jan-2016	11:34:30	0.007	0.007
14-Jan-2016	11:38:30	0.009	0.011
14-Jan-2016	11:42:30	0.016	0.014
14-Jan-2016	11:46:30	0.018	0.015
14-Jan-2016	11:50:30	0.012	0.012
14-Jan-2016	11:54:30	0.005	0.008
14-Jan-2016	11:58:30	0.007	0.006
14-Jan-2016	12:02:30	0.007	0.006
14-Jan-2016	12:06:30	0.003	0.004
14-Jan-2016	12:10:30	0.001	0.001
14-Jan-2016	12:14:30	0.000	0.001
14-Jan-2016	12:18:30	0.001	0.001
14-Jan-2016	12:22:30	0.001	0.001
14-Jan-2016	12:26:30	0.001	0.001
14-Jan-2016	12:30:30	0.001	0.001
14-Jan-2016	12:34:30	0.000	0.000
14-Jan-2016	12:38:30	0.000	0.000
14-Jan-2016	12:42:30	0.000	0.000
14-Jan-2016	12:46:30	0.000	0.000
14-Jan-2016	12:50:30	0.000	0.000
14-Jan-2016	12:54:30	0.000	0.000
14-Jan-2016	12:58:30	0.000	0.000
14-Jan-2016	13:02:30	0.001	0.000
14-Jan-2016	13:06:30	0.000	0.002
14-Jan-2016	13:10:30	0.004	0.002
14-Jan-2016	13:14:30	0.003	0.004
14-Jan-2016	13:18:30	0.004	0.003
14-Jan-2016	13:22:30	0.001	0.002
14-Jan-2016	13:26:30	0.000	0.006
14-Jan-2016	13:30:30	0.018	0.006
14-Jan-2016	13:34:30	0.001	0.006
14-Jan-2016	13:38:30	0.000	0.000
14-Jan-2016	13:42:30	0.000	0.000
14-Jan-2016	13:46:30	0.000	0.000
14-Jan-2016	13:50:30	0.000	0.000
14-Jan-2016	13:54:30	0.001	0.000
14-Jan-2016	13:58:30	0.000	0.000
14-Jan-2016	14:02:30	0.000	0.001

DUST MONITORING

January 2016

shading indicates values over the threshold

Monitor: 3

Threshold: 0.15 (mg/m^3)

Date	Time	Value (mg/m^3)	TWA (mg/m^3)
14-Jan-2016	14:06:30	0.004	0.001
14-Jan-2016	14:10:30	0.000	0.003
14-Jan-2016	14:14:30	0.004	0.002
14-Jan-2016	14:18:30	0.002	0.004
14-Jan-2016	14:22:30	0.006	0.009
14-Jan-2016	14:26:30	0.019	0.010
14-Jan-2016	14:30:30	0.004	0.010
14-Jan-2016	14:34:30	0.006	0.004
14-Jan-2016	14:38:30	0.002	0.003
14-Jan-2016	14:42:30	0.001	0.006
14-Jan-2016	14:46:30	0.014	0.009
14-Jan-2016	14:50:30	0.013	0.012
14-Jan-2016	14:54:30	0.009	0.010
14-Jan-2016	14:58:30	0.007	0.012
14-Jan-2016	15:02:30	0.019	0.010
14-Jan-2016	15:06:30	0.004	0.009
14-Jan-2016	15:10:30	0.004	0.004
14-Jan-2016	15:14:30	0.005	0.005
18-Jan-2016	09:11:25	0.001	0.001
18-Jan-2016	09:15:25	0.000	0.000
18-Jan-2016	09:19:25	0.000	0.000
18-Jan-2016	09:23:25	0.000	0.000
18-Jan-2016	09:27:25	0.000	0.000
18-Jan-2016	09:31:25	0.000	0.000
18-Jan-2016	09:35:25	0.000	0.000
18-Jan-2016	09:39:25	0.000	0.000
19-Jan-2016	08:37:20	0.000	0.000
19-Jan-2016	08:41:20	0.000	0.000
19-Jan-2016	08:45:20	0.000	0.000
19-Jan-2016	08:49:20	0.001	0.000
19-Jan-2016	08:53:20	0.000	0.000
19-Jan-2016	08:57:20	0.000	0.000
19-Jan-2016	09:01:20	0.001	0.002
19-Jan-2016	09:05:20	0.004	0.003
19-Jan-2016	09:09:20	0.003	0.003
19-Jan-2016	09:13:20	0.001	0.001
19-Jan-2016	09:17:20	0.000	0.001
19-Jan-2016	09:21:20	0.003	0.001
19-Jan-2016	09:25:20	0.001	0.002
19-Jan-2016	09:29:20	0.001	0.001
19-Jan-2016	09:33:20	0.000	0.001

DUST MONITORING

January 2016

shading indicates values over the threshold

Monitor: 3

Threshold: 0.15 (mg/m^3)

Date	Time	Value (mg/m^3)	TWA (mg/m^3)
19-Jan-2016	09:37:20	0.001	0.000
19-Jan-2016	09:41:20	0.000	0.000
19-Jan-2016	09:45:20	0.000	0.000
19-Jan-2016	09:49:20	0.001	0.001
19-Jan-2016	09:53:20	0.003	0.002
19-Jan-2016	09:57:20	0.002	0.002
19-Jan-2016	10:01:20	0.002	0.003
19-Jan-2016	10:55:02	0.004	0.002
19-Jan-2016	10:59:02	0.000	0.002
19-Jan-2016	11:03:02	0.001	0.000
19-Jan-2016	11:07:02	0.000	0.002
19-Jan-2016	11:11:02	0.004	0.006
19-Jan-2016	11:15:02	0.015	0.007
19-Jan-2016	11:19:02	0.002	0.006
19-Jan-2016	11:23:02	0.000	0.001
19-Jan-2016	11:27:02	0.000	0.000
19-Jan-2016	11:31:02	0.000	0.000
19-Jan-2016	11:35:02	0.001	0.000
19-Jan-2016	11:39:02	0.000	0.000
19-Jan-2016	11:43:02	0.000	0.004
19-Jan-2016	11:47:02	0.011	0.004
19-Jan-2016	11:51:02	0.000	0.004
19-Jan-2016	11:55:02	0.000	0.019
19-Jan-2016	11:59:02	0.056	0.021
19-Jan-2016	12:03:02	0.007	0.021
19-Jan-2016	12:07:02	0.001	0.004
19-Jan-2016	12:11:02	0.003	0.002
19-Jan-2016	12:15:02	0.001	0.001
19-Jan-2016	12:19:02	0.000	0.000
19-Jan-2016	12:23:02	0.000	0.000
19-Jan-2016	12:27:02	0.000	0.000
19-Jan-2016	12:31:02	0.000	0.000
19-Jan-2016	12:35:02	0.000	0.000
19-Jan-2016	12:39:02	0.000	0.001
19-Jan-2016	12:43:02	0.004	0.001
19-Jan-2016	12:47:02	0.000	0.001
19-Jan-2016	12:51:02	0.000	0.000
19-Jan-2016	12:55:02	0.000	0.000
19-Jan-2016	12:59:02	0.000	0.008
19-Jan-2016	13:03:02	0.024	0.009
19-Jan-2016	13:07:02	0.002	0.009

DUST MONITORING

January 2016

shading indicates values over the threshold

Monitor: 3

Threshold: 0.15 (mg/m^3)

Date	Time	Value (mg/m^3)	TWA (mg/m^3)
19-Jan-2016	13:11:02	0.000	0.001
19-Jan-2016	13:15:02	0.001	0.001
19-Jan-2016	13:19:02	0.001	0.001
19-Jan-2016	13:23:02	0.000	0.001
19-Jan-2016	13:27:02	0.001	0.000
19-Jan-2016	13:31:02	0.000	0.000
19-Jan-2016	13:35:02	0.000	0.000
19-Jan-2016	13:39:02	0.000	0.000
19-Jan-2016	13:43:02	0.000	0.000
19-Jan-2016	13:47:02	0.000	0.000
19-Jan-2016	13:51:02	0.000	0.000
19-Jan-2016	13:55:02	0.000	0.000
19-Jan-2016	13:59:02	0.000	0.000
19-Jan-2016	14:03:02	0.000	0.000
19-Jan-2016	14:07:02	0.000	0.000
19-Jan-2016	14:11:02	0.000	0.000
19-Jan-2016	14:15:02	0.001	0.000
19-Jan-2016	14:19:02	0.000	0.000
19-Jan-2016	14:50:47	0.000	0.000
19-Jan-2016	14:54:47	0.000	0.000
19-Jan-2016	16:20:11	0.001	0.001
25-Jan-2016	08:47:05	0.001	0.001
25-Jan-2016	08:51:05	0.000	0.000
25-Jan-2016	08:55:05	0.000	0.000
25-Jan-2016	08:59:05	0.000	0.000
25-Jan-2016	09:03:05	0.000	0.000
25-Jan-2016	09:07:05	0.000	0.000
25-Jan-2016	09:11:05	0.000	0.000
25-Jan-2016	09:15:05	0.000	0.000
25-Jan-2016	09:19:05	0.000	0.000
25-Jan-2016	09:23:05	0.000	0.000
25-Jan-2016	09:27:05	0.000	0.000
25-Jan-2016	09:31:05	0.000	0.000
25-Jan-2016	09:35:05	0.000	0.000
25-Jan-2016	09:39:05	0.000	0.000
25-Jan-2016	09:43:05	0.001	0.000
25-Jan-2016	09:47:05	0.000	0.000
25-Jan-2016	09:51:05	0.000	0.000
25-Jan-2016	09:55:05	0.000	0.000
25-Jan-2016	09:59:05	0.000	0.000
25-Jan-2016	10:03:05	0.000	0.000

DUST MONITORING

January 2016

shading indicates values over the threshold

Monitor: 3

Threshold: 0.15 (mg/m^3)

Date	Time	Value (mg/m^3)	TWA (mg/m^3)
25-Jan-2016	10:07:05	0.000	0.000
25-Jan-2016	10:11:05	0.000	0.000
25-Jan-2016	10:15:05	0.000	0.000
25-Jan-2016	10:19:05	0.000	0.000
25-Jan-2016	10:23:05	0.000	0.000
25-Jan-2016	10:27:05	0.000	0.000
25-Jan-2016	10:31:05	0.000	0.000
25-Jan-2016	10:35:05	0.000	0.000
25-Jan-2016	10:39:05	0.000	0.000
25-Jan-2016	10:43:05	0.000	0.000
25-Jan-2016	10:47:05	0.000	0.000
25-Jan-2016	10:51:05	0.000	0.000
25-Jan-2016	10:55:05	0.000	0.000
25-Jan-2016	10:59:05	0.000	0.005
25-Jan-2016	11:03:05	0.015	0.008
25-Jan-2016	11:07:05	0.009	0.012
25-Jan-2016	11:16:45	0.011	0.008
25-Jan-2016	11:20:45	0.004	0.006
25-Jan-2016	11:24:45	0.003	0.003
25-Jan-2016	11:28:45	0.003	0.002
25-Jan-2016	11:32:45	0.001	0.002
25-Jan-2016	11:36:45	0.002	0.001
25-Jan-2016	11:40:45	0.001	0.002
25-Jan-2016	11:44:45	0.003	0.002
25-Jan-2016	11:48:45	0.001	0.001
25-Jan-2016	11:52:45	0.000	0.000
25-Jan-2016	11:56:45	0.000	0.000
25-Jan-2016	12:00:45	0.000	0.001
25-Jan-2016	12:04:45	0.002	0.001
25-Jan-2016	12:08:45	0.001	0.001
25-Jan-2016	12:12:45	0.001	0.001
25-Jan-2016	12:16:45	0.002	0.001
25-Jan-2016	12:20:45	0.001	0.002
25-Jan-2016	12:24:45	0.002	0.001
25-Jan-2016	12:28:45	0.001	0.002
25-Jan-2016	12:32:45	0.002	0.002
25-Jan-2016	12:36:45	0.002	0.002
25-Jan-2016	12:40:45	0.002	0.002
25-Jan-2016	12:44:45	0.001	0.002
25-Jan-2016	12:48:45	0.002	0.002
25-Jan-2016	12:52:45	0.003	0.005

DUST MONITORING

January 2016

shading indicates values over the threshold

Monitor: 3

Threshold: 0.15 (mg/m^3)

Date	Time	Value (mg/m^3)	TWA (mg/m^3)
25-Jan-2016	12:56:45	0.009	0.009
25-Jan-2016	13:00:45	0.016	0.013
25-Jan-2016	13:04:45	0.015	0.015
25-Jan-2016	13:08:45	0.014	0.013
25-Jan-2016	13:12:45	0.011	0.012
25-Jan-2016	13:16:45	0.010	0.011
25-Jan-2016	13:20:45	0.011	0.011
25-Jan-2016	13:24:45	0.011	0.010
25-Jan-2016	13:28:45	0.009	0.010
25-Jan-2016	13:32:45	0.009	0.009
25-Jan-2016	13:36:45	0.009	0.009
25-Jan-2016	13:40:45	0.009	0.009
25-Jan-2016	13:44:45	0.010	0.010
25-Jan-2016	13:48:45	0.011	0.011
25-Jan-2016	13:52:45	0.011	0.010
25-Jan-2016	13:56:45	0.009	0.010
25-Jan-2016	14:00:45	0.009	0.009
25-Jan-2016	14:04:45	0.010	0.010
25-Jan-2016	14:08:45	0.010	0.009
25-Jan-2016	14:12:45	0.008	0.009
25-Jan-2016	14:16:45	0.010	0.009
25-Jan-2016	14:20:45	0.010	0.010
25-Jan-2016	14:24:45	0.011	0.009
25-Jan-2016	14:28:45	0.006	0.008
25-Jan-2016	14:32:45	0.006	0.007
25-Jan-2016	14:36:45	0.009	0.008
26-Jan-2016	09:29:08	0.023	0.021
26-Jan-2016	09:33:08	0.019	0.020
26-Jan-2016	09:37:08	0.018	0.020
26-Jan-2016	09:41:08	0.023	0.021
26-Jan-2016	09:45:08	0.021	0.021
26-Jan-2016	09:49:08	0.020	0.020
26-Jan-2016	09:53:08	0.019	0.019
26-Jan-2016	09:57:08	0.019	0.019
26-Jan-2016	10:01:08	0.019	0.019
26-Jan-2016	10:05:08	0.020	0.019
26-Jan-2016	10:09:08	0.019	0.019
26-Jan-2016	10:13:08	0.018	0.018
26-Jan-2016	10:17:08	0.017	0.017
26-Jan-2016	10:21:08	0.016	0.016
26-Jan-2016	10:25:08	0.016	0.016

DUST MONITORING

January 2016

shading indicates values over the threshold

Monitor: 3

Threshold: 0.15 (mg/m^3)

Date	Time	Value (mg/m^3)	TWA (mg/m^3)
26-Jan-2016	10:29:08	0.016	0.015
26-Jan-2016	10:33:08	0.013	0.014
26-Jan-2016	10:37:08	0.013	0.014
26-Jan-2016	10:41:08	0.015	0.014
26-Jan-2016	10:45:08	0.014	0.014
26-Jan-2016	10:49:08	0.014	0.014
26-Jan-2016	10:53:08	0.013	0.014
26-Jan-2016	10:57:08	0.015	0.015
26-Jan-2016	11:01:08	0.016	0.016
26-Jan-2016	11:05:08	0.016	0.016
26-Jan-2016	11:09:08	0.016	0.016
26-Jan-2016	11:13:08	0.016	0.016
26-Jan-2016	11:17:08	0.015	0.015
26-Jan-2016	11:21:08	0.015	0.015
26-Jan-2016	11:25:08	0.014	0.014
26-Jan-2016	11:29:08	0.014	0.014
26-Jan-2016	11:33:08	0.013	0.013
26-Jan-2016	11:37:08	0.013	0.013
26-Jan-2016	11:41:08	0.014	0.013
26-Jan-2016	11:45:08	0.012	0.013
26-Jan-2016	11:49:08	0.012	0.012
26-Jan-2016	11:53:08	0.012	0.012
26-Jan-2016	11:57:08	0.012	0.012
26-Jan-2016	12:01:08	0.012	0.012
26-Jan-2016	12:05:08	0.012	0.012
26-Jan-2016	12:09:08	0.012	0.012
26-Jan-2016	12:13:08	0.012	0.012
26-Jan-2016	12:17:08	0.013	0.013
26-Jan-2016	12:21:08	0.013	0.013
26-Jan-2016	12:25:08	0.013	0.013
26-Jan-2016	12:29:08	0.012	0.012
26-Jan-2016	12:33:08	0.011	0.012
26-Jan-2016	12:37:08	0.012	0.012
26-Jan-2016	12:41:08	0.013	0.013
26-Jan-2016	12:45:08	0.014	0.013
26-Jan-2016	12:49:08	0.013	0.014
26-Jan-2016	12:53:08	0.014	0.014
27-Jan-2016	10:15:34	0.021	0.023
27-Jan-2016	10:19:34	0.025	0.025
27-Jan-2016	10:23:34	0.028	0.028
27-Jan-2016	10:27:34	0.032	0.031

DUST MONITORING

January 2016

shading indicates values over the threshold

Monitor: 3

Threshold: 0.15 (mg/m^3)

Date	Time	Value (mg/m^3)	TWA (mg/m^3)
27-Jan-2016	10:31:34	0.033	0.033
27-Jan-2016	10:35:34	0.034	0.035
27-Jan-2016	10:39:34	0.038	0.038
27-Jan-2016	10:43:34	0.041	0.042
27-Jan-2016	10:47:34	0.046	0.045
27-Jan-2016	10:51:34	0.047	0.046
27-Jan-2016	10:55:34	0.046	0.044
27-Jan-2016	10:59:34	0.038	0.039
27-Jan-2016	11:03:34	0.034	0.038
27-Jan-2016	11:07:34	0.041	0.036
27-Jan-2016	11:11:34	0.034	0.036
27-Jan-2016	11:15:34	0.032	0.034
27-Jan-2016	11:19:34	0.037	0.036
27-Jan-2016	11:23:34	0.039	0.038
27-Jan-2016	11:27:34	0.039	0.038
27-Jan-2016	11:31:34	0.035	0.035
27-Jan-2016	11:35:34	0.030	0.032
27-Jan-2016	11:39:34	0.032	0.032
27-Jan-2016	11:43:34	0.033	0.032
27-Jan-2016	11:47:34	0.030	0.030
27-Jan-2016	11:51:34	0.027	0.028
27-Jan-2016	11:55:34	0.026	0.026
27-Jan-2016	11:59:34	0.025	0.025
27-Jan-2016	12:03:34	0.024	0.024
27-Jan-2016	12:07:34	0.023	0.024
27-Jan-2016	12:11:34	0.025	0.023
27-Jan-2016	12:15:34	0.022	0.022
27-Jan-2016	12:19:34	0.018	0.019
27-Jan-2016	12:23:34	0.017	0.016
27-Jan-2016	12:27:34	0.012	0.013
27-Jan-2016	12:31:34	0.010	0.011
27-Jan-2016	12:35:34	0.010	0.009
27-Jan-2016	12:39:34	0.008	0.009
27-Jan-2016	12:43:34	0.008	0.008
27-Jan-2016	12:47:34	0.007	0.007
27-Jan-2016	12:51:34	0.006	0.007
27-Jan-2016	12:55:34	0.009	0.008
27-Jan-2016	12:59:34	0.009	0.008
27-Jan-2016	13:03:34	0.007	0.007
27-Jan-2016	13:07:34	0.006	0.006
27-Jan-2016	13:11:34	0.006	0.006

DUST MONITORING

January 2016

shading indicates values over the threshold

Monitor: 3

Threshold: 0.15 (mg/m^3)

Date	Time	Value (mg/m^3)	TWA (mg/m^3)
27-Jan-2016	13:15:34	0.007	0.006
27-Jan-2016	13:19:34	0.006	0.006
27-Jan-2016	13:23:34	0.006	0.005
27-Jan-2016	13:27:34	0.003	0.004
27-Jan-2016	13:31:34	0.003	0.003
27-Jan-2016	13:35:34	0.003	0.003
27-Jan-2016	13:39:34	0.003	0.003
27-Jan-2016	13:43:34	0.003	0.004
27-Jan-2016	13:47:34	0.005	0.005
27-Jan-2016	13:51:34	0.007	0.006
27-Jan-2016	13:55:34	0.006	0.006
27-Jan-2016	13:59:34	0.005	0.005
27-Jan-2016	14:03:34	0.005	0.005
27-Jan-2016	14:07:34	0.004	0.004
27-Jan-2016	14:11:34	0.004	0.004
27-Jan-2016	14:15:34	0.003	0.003
27-Jan-2016	14:19:34	0.003	0.003
27-Jan-2016	14:23:34	0.004	0.004
28-Jan-2016	08:59:01	0.037	0.039
28-Jan-2016	09:03:01	0.040	0.041
28-Jan-2016	09:07:01	0.046	0.043
28-Jan-2016	09:11:01	0.044	0.043
28-Jan-2016	09:15:01	0.040	0.041
28-Jan-2016	09:19:01	0.039	0.040
28-Jan-2016	09:23:01	0.042	0.041
28-Jan-2016	09:27:01	0.041	0.041
28-Jan-2016	09:31:01	0.041	0.041
28-Jan-2016	09:35:01	0.041	0.041
28-Jan-2016	09:39:01	0.041	0.042
28-Jan-2016	09:43:01	0.043	0.042
28-Jan-2016	09:47:01	0.043	0.041
28-Jan-2016	09:51:01	0.037	0.039
28-Jan-2016	09:55:01	0.036	0.036
28-Jan-2016	09:59:01	0.035	0.035
28-Jan-2016	10:03:01	0.035	0.035
28-Jan-2016	10:07:01	0.035	0.035
28-Jan-2016	10:11:01	0.034	0.034
28-Jan-2016	10:15:01	0.032	0.032
28-Jan-2016	10:19:01	0.029	0.030
28-Jan-2016	10:23:01	0.028	0.028
28-Jan-2016	10:27:01	0.028	0.028

DUST MONITORING

January 2016

shading indicates values over the threshold

Monitor: 3

Threshold: 0.15 (mg/m^3)

Date	Time	Value (mg/m^3)	TWA (mg/m^3)
28-Jan-2016	10:31:01	0.028	0.029
28-Jan-2016	10:35:01	0.030	0.028
28-Jan-2016	10:39:01	0.027	0.029
28-Jan-2016	10:43:01	0.029	0.029
28-Jan-2016	10:47:01	0.032	0.031
28-Jan-2016	10:51:01	0.031	0.031
28-Jan-2016	10:55:01	0.029	0.030
28-Jan-2016	10:59:01	0.031	0.030
28-Jan-2016	11:03:01	0.030	0.029
28-Jan-2016	11:07:01	0.026	0.027
28-Jan-2016	11:11:01	0.026	0.026
28-Jan-2016	11:15:01	0.026	0.027
28-Jan-2016	11:19:01	0.028	0.027
28-Jan-2016	11:23:01	0.027	0.027
28-Jan-2016	11:27:01	0.026	0.026
28-Jan-2016	11:31:01	0.024	0.024
28-Jan-2016	11:35:01	0.022	0.022
28-Jan-2016	11:39:01	0.020	0.021
28-Jan-2016	11:43:01	0.021	0.020
28-Jan-2016	11:47:01	0.019	0.020
28-Jan-2016	11:51:01	0.019	0.019
28-Jan-2016	11:55:01	0.020	0.016
28-Jan-2016	14:59:10	0.008	0.012
28-Jan-2016	15:03:10	0.007	0.007
28-Jan-2016	15:07:10	0.007	0.007
28-Jan-2016	15:11:10	0.007	0.007
28-Jan-2016	15:15:10	0.007	0.007
28-Jan-2016	15:19:10	0.007	0.007
28-Jan-2016	15:23:10	0.008	0.008
28-Jan-2016	15:27:10	0.009	0.008
28-Jan-2016	15:31:10	0.008	0.008
28-Jan-2016	15:35:10	0.007	0.007
28-Jan-2016	15:39:10	0.007	0.007
28-Jan-2016	15:43:10	0.008	0.007
28-Jan-2016	15:47:10	0.007	0.009
28-Jan-2016	15:51:10	0.011	0.009
29-Jan-2016	09:35:01	0.006	0.006
29-Jan-2016	09:39:01	0.006	0.006
29-Jan-2016	09:43:01	0.005	0.005
29-Jan-2016	09:47:01	0.003	0.004
29-Jan-2016	09:51:01	0.004	0.004

DUST MONITORING

January 2016

shading indicates values over the threshold

Monitor: 3

Threshold: 0.15 (mg/m^3)

Date	Time	Value (mg/m^3)	TWA (mg/m^3)
29-Jan-2016	09:55:01	0.004	0.004
29-Jan-2016	09:59:01	0.003	0.003
29-Jan-2016	10:03:01	0.003	0.003
29-Jan-2016	10:07:01	0.003	0.003
29-Jan-2016	10:11:01	0.002	0.003
29-Jan-2016	10:15:01	0.004	0.003
29-Jan-2016	10:19:01	0.002	0.004
29-Jan-2016	10:23:01	0.005	0.004
29-Jan-2016	10:27:01	0.005	0.026
29-Jan-2016	10:31:01	0.069	0.032
29-Jan-2016	10:35:01	0.022	0.031
29-Jan-2016	10:39:01	0.002	0.009
29-Jan-2016	10:43:01	0.002	0.006
29-Jan-2016	10:47:01	0.013	0.008
29-Jan-2016	10:51:01	0.009	0.009
29-Jan-2016	10:55:01	0.005	0.006
29-Jan-2016	10:59:01	0.003	0.003
29-Jan-2016	11:03:01	0.002	0.003
29-Jan-2016	11:07:01	0.003	0.003
29-Jan-2016	11:11:01	0.003	0.003
29-Jan-2016	11:15:01	0.003	0.003
29-Jan-2016	11:19:01	0.003	0.003
29-Jan-2016	11:23:01	0.002	0.002
29-Jan-2016	11:27:01	0.001	0.002
29-Jan-2016	11:31:01	0.002	0.002
29-Jan-2016	11:35:01	0.002	0.002
29-Jan-2016	11:39:01	0.002	0.002
29-Jan-2016	11:43:01	0.002	0.002
29-Jan-2016	11:47:01	0.002	0.002
29-Jan-2016	11:51:01	0.002	0.004
29-Jan-2016	11:55:01	0.008	0.004
29-Jan-2016	11:59:01	0.001	0.020
29-Jan-2016	12:03:01	0.051	0.020
29-Jan-2016	12:07:01	0.008	0.020
29-Jan-2016	12:11:01	0.001	0.004
29-Jan-2016	12:15:01	0.003	0.002
29-Jan-2016	12:19:01	0.001	0.002
29-Jan-2016	12:23:01	0.001	0.001
29-Jan-2016	12:27:01	0.001	0.001
29-Jan-2016	12:31:01	0.000	0.001
29-Jan-2016	12:35:01	0.001	0.001

DUST MONITORING

January 2016

shading indicates values over the threshold

Monitor: 3

Threshold: 0.15 (mg/m^3)

Date	Time	Value (mg/m^3)	TWA (mg/m^3)
29-Jan-2016	12:39:01	0.001	0.001
29-Jan-2016	12:43:01	0.001	0.001
29-Jan-2016	12:47:01	0.002	0.001
29-Jan-2016	12:51:01	0.001	0.001
29-Jan-2016	12:55:01	0.001	0.001
29-Jan-2016	12:59:01	0.001	0.001
29-Jan-2016	13:03:01	0.002	0.001
29-Jan-2016	13:07:01	0.001	0.003
29-Jan-2016	13:11:01	0.007	0.003
29-Jan-2016	13:15:01	0.002	0.004
29-Jan-2016	13:19:01	0.002	0.002
29-Jan-2016	13:23:01	0.001	0.001
29-Jan-2016	13:27:01	0.001	0.001
29-Jan-2016	13:31:01	0.001	0.001
29-Jan-2016	13:35:01	0.002	0.002
29-Jan-2016	13:39:01	0.002	0.002
29-Jan-2016	13:43:01	0.002	0.002
29-Jan-2016	13:47:01	0.002	0.002
29-Jan-2016	13:51:01	0.002	0.002
29-Jan-2016	13:55:01	0.002	0.002
29-Jan-2016	13:59:01	0.001	0.001
29-Jan-2016	14:03:01	0.001	0.001
29-Jan-2016	14:07:01	0.002	0.004
29-Jan-2016	14:11:01	0.010	0.005
29-Jan-2016	14:15:01	0.003	0.005
29-Jan-2016	14:19:01	0.002	0.002
29-Jan-2016	14:23:01	0.001	0.001
29-Jan-2016	14:27:01	0.001	0.001
29-Jan-2016	14:31:01	0.001	0.001
29-Jan-2016	14:35:01	0.001	0.001
29-Jan-2016	14:39:01	0.001	0.001
29-Jan-2016	14:43:01	0.001	0.001
29-Jan-2016	14:47:01	0.001	0.001
29-Jan-2016	14:51:01	0.001	0.001
29-Jan-2016	14:55:01	0.002	0.002
29-Jan-2016	14:59:01	0.002	0.002
29-Jan-2016	15:03:01	0.001	0.002
29-Jan-2016	15:07:01	0.002	0.001
29-Jan-2016	15:11:01	0.001	0.001
29-Jan-2016	15:15:01	0.001	0.001
29-Jan-2016	15:19:01	0.001	0.001

DUST MONITORING

January 2016

shading indicates values over the threshold

Monitor: 3

Threshold: 0.15 (mg/m^3)

Date	Time	Value (mg/m^3)	TWA (mg/m^3)
29-Jan-2016	15:23:01	0.002	0.005
29-Jan-2016	15:27:01	0.012	0.007
29-Jan-2016	15:31:01	0.007	0.008
29-Jan-2016	15:35:01	0.004	0.007
29-Jan-2016	15:39:01	0.011	0.006
29-Jan-2016	15:43:01	0.003	0.005
29-Jan-2016	15:47:01	0.001	0.002
29-Jan-2016	15:51:01	0.001	0.001
29-Jan-2016	15:55:01	0.001	0.001
29-Jan-2016	15:59:01	0.002	0.001
29-Jan-2016	16:03:01	0.001	0.002

DUST MONITORING

February 2016

shading indicates values over the threshold

Monitor: 1

Threshold: 0.15 (mg/m^3)

Date	Time	Value (mg/m^3)	TWA (mg/m^3)
2-Feb-2016	08:11:23	0.000	0.000
2-Feb-2016	08:15:23	0.000	0.000
2-Feb-2016	08:19:23	0.000	0.000
2-Feb-2016	08:23:23	0.000	0.000
2-Feb-2016	08:27:23	0.000	0.000
2-Feb-2016	08:31:23	0.000	0.000
2-Feb-2016	08:35:23	0.000	0.000
2-Feb-2016	08:39:23	0.000	0.000
2-Feb-2016	08:43:23	0.000	0.000
2-Feb-2016	08:47:23	0.000	0.000
2-Feb-2016	08:51:23	0.000	0.000
2-Feb-2016	08:55:23	0.000	0.000
2-Feb-2016	08:59:23	0.000	0.001
2-Feb-2016	09:03:23	0.002	0.001
2-Feb-2016	09:07:23	0.000	0.001
2-Feb-2016	09:11:23	0.000	0.000
2-Feb-2016	09:15:23	0.000	0.000
2-Feb-2016	09:19:23	0.000	0.000
2-Feb-2016	09:23:23	0.000	0.000
2-Feb-2016	09:27:23	0.000	0.000
2-Feb-2016	09:31:23	0.000	0.000
2-Feb-2016	09:35:23	0.000	0.000
2-Feb-2016	09:39:23	0.000	0.000
2-Feb-2016	09:43:23	0.000	0.000
2-Feb-2016	09:47:23	0.000	0.001
2-Feb-2016	09:51:23	0.002	0.001
2-Feb-2016	09:55:23	0.000	0.001
2-Feb-2016	09:59:23	0.000	0.000
2-Feb-2016	10:03:23	0.000	0.000
2-Feb-2016	10:07:23	0.000	0.000
2-Feb-2016	10:11:23	0.000	0.000
2-Feb-2016	10:15:23	0.000	0.000
2-Feb-2016	10:19:23	0.000	0.000
2-Feb-2016	10:23:23	0.000	0.000
2-Feb-2016	10:27:23	0.000	0.000
2-Feb-2016	10:31:23	0.000	0.000
2-Feb-2016	10:35:23	0.000	0.000
2-Feb-2016	10:39:23	0.000	0.000
2-Feb-2016	10:43:23	0.000	0.000
2-Feb-2016	10:47:23	0.000	0.000
2-Feb-2016	10:51:23	0.001	0.000

DUST MONITORING

February 2016

shading indicates values over the threshold

Monitor: 1

Threshold: 0.15 (mg/m^3)

Date	Time	Value (mg/m^3)	TWA (mg/m^3)
2-Feb-2016	10:55:23	0.000	0.000
2-Feb-2016	10:59:23	0.000	0.000
2-Feb-2016	11:03:23	0.001	0.000
2-Feb-2016	11:07:23	0.000	0.001
2-Feb-2016	11:11:23	0.001	0.000
2-Feb-2016	11:15:23	0.000	0.000
2-Feb-2016	11:19:23	0.000	0.000
2-Feb-2016	11:23:23	0.000	0.000
2-Feb-2016	11:27:23	0.000	0.000
2-Feb-2016	11:31:23	0.000	0.000
2-Feb-2016	11:35:23	0.000	0.000
2-Feb-2016	11:39:23	0.000	0.000
2-Feb-2016	11:43:23	0.001	0.001
2-Feb-2016	11:47:23	0.001	0.001
2-Feb-2016	11:51:23	0.000	0.000
2-Feb-2016	11:55:23	0.000	0.000
2-Feb-2016	11:59:23	0.000	0.000
2-Feb-2016	12:03:23	0.000	0.000
2-Feb-2016	12:07:23	0.000	0.000
2-Feb-2016	12:11:23	0.000	0.000
2-Feb-2016	12:15:23	0.000	0.000
2-Feb-2016	12:19:23	0.000	0.000
2-Feb-2016	12:23:23	0.001	0.001
2-Feb-2016	12:27:23	0.001	0.001
2-Feb-2016	12:31:23	0.000	0.001
2-Feb-2016	12:35:23	0.001	0.000
2-Feb-2016	12:39:23	0.000	0.001
2-Feb-2016	12:43:23	0.001	0.000
2-Feb-2016	12:47:23	0.000	0.000
2-Feb-2016	12:51:23	0.000	0.004
2-Feb-2016	12:55:23	0.012	0.005
2-Feb-2016	12:59:23	0.003	0.006
2-Feb-2016	13:03:23	0.002	0.002
2-Feb-2016	13:07:23	0.000	0.001
2-Feb-2016	13:11:23	0.001	0.001
2-Feb-2016	13:15:23	0.002	0.001
2-Feb-2016	13:19:23	0.000	0.001
2-Feb-2016	13:23:23	0.000	0.000
2-Feb-2016	13:27:23	0.000	0.000
2-Feb-2016	13:31:23	0.001	0.000
2-Feb-2016	13:35:23	0.000	0.000

DUST MONITORING

February 2016

shading indicates values over the threshold

Monitor: 1

Threshold: 0.15 (mg/m^3)

Date	Time	Value (mg/m^3)	TWA (mg/m^3)
2-Feb-2016	13:39:23	0.000	0.000
2-Feb-2016	13:43:23	0.000	0.001
2-Feb-2016	13:47:23	0.002	0.001
2-Feb-2016	13:51:23	0.000	0.001
2-Feb-2016	13:55:23	0.002	0.001
2-Feb-2016	13:59:23	0.000	0.001
2-Feb-2016	14:03:23	0.002	0.002
2-Feb-2016	14:07:23	0.003	0.002
2-Feb-2016	14:11:23	0.001	0.002
2-Feb-2016	14:15:23	0.002	0.003
2-Feb-2016	14:19:23	0.005	0.003
2-Feb-2016	14:23:23	0.001	0.003
2-Feb-2016	14:27:23	0.002	0.002
2-Feb-2016	14:31:23	0.003	0.003
2-Feb-2016	14:35:23	0.003	0.003
2-Feb-2016	14:39:23	0.004	0.003
2-Feb-2016	14:43:23	0.002	0.002
2-Feb-2016	14:47:23	0.001	0.002
2-Feb-2016	14:51:23	0.002	0.001
2-Feb-2016	14:55:23	0.000	0.001
2-Feb-2016	14:59:23	0.000	0.000
2-Feb-2016	15:03:23	0.000	0.000
2-Feb-2016	15:07:23	0.000	0.000
2-Feb-2016	15:11:23	0.001	0.001
2-Feb-2016	15:15:23	0.001	0.001
2-Feb-2016	15:19:23	0.000	0.002
2-Feb-2016	15:23:23	0.004	0.002
2-Feb-2016	15:27:23	0.001	0.002
2-Feb-2016	15:31:23	0.001	0.001
2-Feb-2016	15:35:23	0.000	0.000
2-Feb-2016	15:39:23	0.000	0.000
2-Feb-2016	15:43:23	0.000	0.000
2-Feb-2016	15:47:23	0.001	0.001
4-Feb-2016	08:29:39	0.000	0.000
4-Feb-2016	08:33:39	0.000	0.000
4-Feb-2016	08:37:39	0.000	0.000
4-Feb-2016	08:41:39	0.000	0.000
4-Feb-2016	08:45:39	0.000	0.000
4-Feb-2016	08:49:39	0.000	0.000
4-Feb-2016	08:53:39	0.000	0.000
4-Feb-2016	08:57:39	0.000	0.000

DUST MONITORING

February 2016

shading indicates values over the threshold

Monitor: 1

Threshold: 0.15 (mg/m^3)

Date	Time	Value (mg/m^3)	TWA (mg/m^3)
4-Feb-2016	09:01:39	0.000	0.000
4-Feb-2016	09:05:39	0.000	0.000
4-Feb-2016	09:09:39	0.000	0.000
4-Feb-2016	09:13:39	0.000	0.000
4-Feb-2016	09:17:39	0.000	0.000
4-Feb-2016	09:21:39	0.000	0.000
4-Feb-2016	09:25:39	0.000	0.000
4-Feb-2016	09:29:39	0.000	0.000
4-Feb-2016	09:33:39	0.000	0.000
4-Feb-2016	09:37:39	0.001	0.000
4-Feb-2016	09:41:39	0.000	0.000
4-Feb-2016	09:45:39	0.000	0.000
4-Feb-2016	09:49:39	0.000	0.000
4-Feb-2016	09:53:39	0.000	0.000
4-Feb-2016	09:57:39	0.000	0.000
4-Feb-2016	10:01:39	0.000	0.001
4-Feb-2016	10:05:39	0.004	0.002
4-Feb-2016	10:09:39	0.001	0.002
4-Feb-2016	10:13:39	0.000	0.000
4-Feb-2016	10:17:39	0.000	0.000
4-Feb-2016	10:21:39	0.001	0.002
4-Feb-2016	10:25:39	0.004	0.002
4-Feb-2016	10:29:39	0.002	0.003
4-Feb-2016	10:33:39	0.003	0.002
4-Feb-2016	10:37:39	0.001	0.002
4-Feb-2016	10:41:39	0.001	0.001
4-Feb-2016	10:45:39	0.001	0.003
4-Feb-2016	10:49:39	0.006	0.003
4-Feb-2016	10:53:39	0.002	0.003
4-Feb-2016	10:57:39	0.002	0.001
4-Feb-2016	11:01:39	0.000	0.001
4-Feb-2016	11:05:39	0.000	0.000
4-Feb-2016	11:09:39	0.001	0.001
4-Feb-2016	11:13:39	0.001	0.001
4-Feb-2016	11:17:39	0.000	0.000
4-Feb-2016	11:21:39	0.000	0.000
4-Feb-2016	11:25:39	0.000	0.000
4-Feb-2016	11:29:39	0.001	0.001
4-Feb-2016	11:33:39	0.003	0.002
4-Feb-2016	11:37:39	0.001	0.002
4-Feb-2016	11:41:39	0.001	0.001

DUST MONITORING

February 2016

shading indicates values over the threshold

Monitor: 1

Threshold: 0.15 (mg/m^3)

Date	Time	Value (mg/m^3)	TWA (mg/m^3)
4-Feb-2016	11:45:39	0.000	0.001
4-Feb-2016	11:49:39	0.001	0.001
4-Feb-2016	11:53:39	0.001	0.001
4-Feb-2016	11:57:39	0.002	0.001
4-Feb-2016	12:01:39	0.000	0.001
4-Feb-2016	12:05:39	0.000	0.000
4-Feb-2016	12:09:39	0.000	0.000
4-Feb-2016	12:13:39	0.001	0.000
4-Feb-2016	12:17:39	0.000	0.000
4-Feb-2016	12:21:39	0.000	0.000
4-Feb-2016	12:25:39	0.001	0.001
4-Feb-2016	12:29:39	0.002	0.001
4-Feb-2016	12:33:39	0.001	0.004
4-Feb-2016	12:37:39	0.008	0.003
4-Feb-2016	12:41:39	0.000	0.003
4-Feb-2016	12:45:39	0.000	0.000
4-Feb-2016	12:49:39	0.000	0.000
4-Feb-2016	12:53:39	0.000	0.000
4-Feb-2016	12:57:39	0.001	0.001
4-Feb-2016	13:01:39	0.003	0.003
4-Feb-2016	13:05:39	0.004	0.002
4-Feb-2016	13:09:39	0.000	0.002
4-Feb-2016	13:13:39	0.002	0.001
4-Feb-2016	13:17:39	0.000	0.002
4-Feb-2016	13:21:39	0.003	0.001
4-Feb-2016	13:25:39	0.001	0.001
4-Feb-2016	13:29:39	0.000	0.001
4-Feb-2016	13:33:39	0.002	0.001
4-Feb-2016	13:37:39	0.001	0.002
4-Feb-2016	13:41:39	0.004	0.003
5-Feb-2016	08:18:07	0.000	0.001
5-Feb-2016	08:22:07	0.001	0.000
5-Feb-2016	08:26:07	0.000	0.000
5-Feb-2016	08:30:07	0.000	0.000
5-Feb-2016	08:34:07	0.000	0.000
5-Feb-2016	08:38:07	0.000	0.000
5-Feb-2016	08:42:07	0.000	0.000
5-Feb-2016	08:46:07	0.000	0.000
5-Feb-2016	08:50:07	0.000	0.000
5-Feb-2016	08:54:07	0.000	0.000
5-Feb-2016	08:58:07	0.000	0.000

DUST MONITORING

February 2016

shading indicates values over the threshold

Monitor: 1

Threshold: 0.15 (mg/m^3)

Date	Time	Value (mg/m^3)	TWA (mg/m^3)
5-Feb-2016	09:02:07	0.001	0.000
5-Feb-2016	09:06:07	0.000	0.000
5-Feb-2016	09:10:07	0.000	0.000
5-Feb-2016	09:14:07	0.000	0.000
5-Feb-2016	09:18:07	0.000	0.000
5-Feb-2016	09:22:07	0.000	0.000
5-Feb-2016	09:26:07	0.000	0.000
5-Feb-2016	09:30:07	0.000	0.000
5-Feb-2016	09:34:07	0.000	0.000
5-Feb-2016	09:38:07	0.000	0.000
5-Feb-2016	09:42:07	0.001	0.001
5-Feb-2016	09:46:07	0.003	0.002
5-Feb-2016	09:50:07	0.001	0.002
5-Feb-2016	09:54:07	0.003	0.001
5-Feb-2016	09:58:07	0.000	0.001
5-Feb-2016	10:02:07	0.000	0.000
5-Feb-2016	10:06:07	0.001	0.002
5-Feb-2016	10:10:07	0.005	0.002
5-Feb-2016	10:14:07	0.001	0.003
5-Feb-2016	10:18:07	0.002	0.001
5-Feb-2016	10:22:07	0.000	0.001
5-Feb-2016	10:26:07	0.000	0.000
5-Feb-2016	10:30:07	0.000	0.000
5-Feb-2016	10:34:07	0.000	0.000
5-Feb-2016	10:38:07	0.000	0.000
5-Feb-2016	10:42:07	0.000	0.000
5-Feb-2016	10:46:07	0.000	0.000
5-Feb-2016	10:50:07	0.000	0.000
5-Feb-2016	10:54:07	0.001	0.001
5-Feb-2016	10:58:07	0.001	0.001
5-Feb-2016	11:02:07	0.000	0.001
5-Feb-2016	11:06:07	0.001	0.000
5-Feb-2016	11:10:07	0.000	0.001
5-Feb-2016	11:14:07	0.001	0.000
5-Feb-2016	11:18:07	0.000	0.002
5-Feb-2016	11:22:07	0.004	0.001
5-Feb-2016	11:26:07	0.000	0.001
5-Feb-2016	11:30:07	0.000	0.001
5-Feb-2016	11:34:07	0.002	0.001
5-Feb-2016	11:38:07	0.001	0.001
5-Feb-2016	11:42:07	0.001	0.001

DUST MONITORING

February 2016

shading indicates values over the threshold

Monitor: 1

Threshold: 0.15 (mg/m^3)

Date	Time	Value (mg/m^3)	TWA (mg/m^3)
5-Feb-2016	11:46:07	0.000	0.001
5-Feb-2016	11:50:07	0.001	0.001
5-Feb-2016	11:54:07	0.001	0.001
5-Feb-2016	11:58:07	0.000	0.001
5-Feb-2016	12:02:07	0.001	0.001
5-Feb-2016	12:06:07	0.001	0.001
5-Feb-2016	12:10:07	0.000	0.000
5-Feb-2016	12:14:07	0.000	0.000
5-Feb-2016	12:18:07	0.000	0.000
5-Feb-2016	12:22:07	0.000	0.000
5-Feb-2016	12:26:07	0.000	0.000
5-Feb-2016	12:30:07	0.000	0.000
5-Feb-2016	12:34:07	0.001	0.002
5-Feb-2016	12:38:07	0.005	0.002
5-Feb-2016	12:42:07	0.001	0.002
5-Feb-2016	12:46:07	0.000	0.000
5-Feb-2016	12:50:07	0.000	0.000
5-Feb-2016	12:54:07	0.000	0.000
5-Feb-2016	12:58:07	0.000	0.000
5-Feb-2016	13:02:07	0.000	0.000
5-Feb-2016	13:06:07	0.000	0.000
5-Feb-2016	13:10:07	0.000	0.000
5-Feb-2016	13:14:07	0.000	0.000
5-Feb-2016	13:18:07	0.000	0.000
5-Feb-2016	13:22:07	0.000	0.001
5-Feb-2016	13:26:07	0.002	0.001
5-Feb-2016	13:30:07	0.002	0.001
5-Feb-2016	13:34:07	0.000	0.001
5-Feb-2016	13:38:07	0.000	0.000
5-Feb-2016	13:42:07	0.000	0.000
5-Feb-2016	13:46:07	0.001	0.000
5-Feb-2016	13:50:07	0.000	0.001
5-Feb-2016	13:54:07	0.001	0.000
5-Feb-2016	13:58:07	0.000	0.000
5-Feb-2016	14:02:07	0.000	0.000
5-Feb-2016	14:06:07	0.000	0.000
5-Feb-2016	14:10:07	0.000	0.000
5-Feb-2016	14:14:07	0.000	0.000
5-Feb-2016	14:18:07	0.000	0.000
5-Feb-2016	14:22:07	0.000	0.000
5-Feb-2016	14:26:07	0.000	0.001

DUST MONITORING

February 2016

shading indicates values over the threshold

Monitor: 1

Threshold: 0.15 (mg/m^3)

Date	Time	Value (mg/m^3)	TWA (mg/m^3)
5-Feb-2016	14:30:07	0.004	0.001
5-Feb-2016	14:34:07	0.000	0.002
5-Feb-2016	14:38:07	0.001	0.001
5-Feb-2016	14:42:07	0.001	0.001
5-Feb-2016	14:46:07	0.000	0.000
5-Feb-2016	14:50:07	0.000	0.000
5-Feb-2016	14:54:07	0.000	0.000
5-Feb-2016	14:58:07	0.000	0.000
5-Feb-2016	15:02:07	0.000	0.000
5-Feb-2016	15:06:07	0.000	0.000
5-Feb-2016	15:10:07	0.000	0.000
5-Feb-2016	15:14:07	0.000	0.000
5-Feb-2016	15:18:07	0.000	0.000
5-Feb-2016	15:22:07	0.000	0.000
5-Feb-2016	15:26:07	0.000	0.001
5-Feb-2016	15:30:07	0.002	0.001
5-Feb-2016	15:34:07	0.000	0.001
5-Feb-2016	15:38:07	0.000	0.000
5-Feb-2016	15:42:07	0.000	0.003
5-Feb-2016	15:46:07	0.010	0.004
5-Feb-2016	15:50:07	0.001	0.004
5-Feb-2016	15:54:07	0.000	0.000
5-Feb-2016	15:58:07	0.000	0.000
8-Feb-2016	09:13:39	0.000	0.001
8-Feb-2016	09:17:39	0.001	0.000
8-Feb-2016	09:21:39	0.000	0.001
8-Feb-2016	09:25:39	0.002	0.001
8-Feb-2016	09:29:39	0.000	0.001
8-Feb-2016	09:33:39	0.000	0.000
8-Feb-2016	09:37:39	0.000	0.000
8-Feb-2016	09:41:39	0.000	0.000
8-Feb-2016	09:45:39	0.001	0.000
8-Feb-2016	09:49:39	0.000	0.000
8-Feb-2016	09:53:39	0.000	0.000
8-Feb-2016	09:57:39	0.000	0.000
8-Feb-2016	10:01:39	0.000	0.000
8-Feb-2016	10:05:39	0.000	0.001
8-Feb-2016	10:09:39	0.003	0.001
8-Feb-2016	10:13:39	0.000	0.001
8-Feb-2016	10:17:39	0.000	0.000
8-Feb-2016	10:21:39	0.001	0.000

DUST MONITORING

February 2016

shading indicates values over the threshold

Monitor: 1

Threshold: 0.15 (mg/m^3)

Date	Time	Value (mg/m^3)	TWA (mg/m^3)
8-Feb-2016	10:25:39	0.000	0.000
8-Feb-2016	10:29:39	0.000	0.000
8-Feb-2016	10:33:39	0.000	0.000
8-Feb-2016	10:37:39	0.001	0.000
8-Feb-2016	10:41:39	0.000	0.000
8-Feb-2016	10:45:39	0.000	0.000
8-Feb-2016	10:49:39	0.000	0.000
8-Feb-2016	10:53:39	0.000	0.000
8-Feb-2016	10:57:39	0.000	0.000
8-Feb-2016	11:01:39	0.000	0.000
8-Feb-2016	11:05:39	0.000	0.000
8-Feb-2016	11:09:39	0.001	0.000
8-Feb-2016	11:13:39	0.000	0.000
8-Feb-2016	11:17:39	0.000	0.000
8-Feb-2016	11:21:39	0.000	0.000
8-Feb-2016	11:25:39	0.000	0.000
8-Feb-2016	11:29:39	0.000	0.000
8-Feb-2016	11:33:39	0.000	0.000
8-Feb-2016	11:37:39	0.000	0.000
8-Feb-2016	11:41:39	0.000	0.000
8-Feb-2016	11:45:39	0.000	0.000
8-Feb-2016	11:49:39	0.000	0.000
8-Feb-2016	11:53:39	0.000	0.000
8-Feb-2016	11:57:39	0.001	0.000
8-Feb-2016	12:01:39	0.000	0.000
8-Feb-2016	12:05:39	0.000	0.000
8-Feb-2016	12:09:39	0.000	0.000
8-Feb-2016	12:13:39	0.000	0.000
8-Feb-2016	12:17:39	0.000	0.000
8-Feb-2016	12:21:39	0.000	0.000
8-Feb-2016	12:25:39	0.000	0.000
8-Feb-2016	12:29:39	0.000	0.000
8-Feb-2016	12:33:39	0.000	0.000
8-Feb-2016	12:37:39	0.000	0.000
8-Feb-2016	12:41:39	0.000	0.000
8-Feb-2016	12:45:39	0.000	0.000
8-Feb-2016	12:49:39	0.000	0.000
8-Feb-2016	12:53:39	0.000	0.000
8-Feb-2016	12:57:39	0.000	0.000
8-Feb-2016	13:01:39	0.000	0.000
8-Feb-2016	13:05:39	0.000	0.000

DUST MONITORING

February 2016

shading indicates values over the threshold

Monitor: 1

Threshold: 0.15 (mg/m^3)

Date	Time	Value (mg/m^3)	TWA (mg/m^3)
8-Feb-2016	13:09:39	0.000	0.000
8-Feb-2016	13:13:39	0.000	0.000
8-Feb-2016	13:17:39	0.000	0.000
8-Feb-2016	13:21:39	0.000	0.000
8-Feb-2016	13:25:39	0.000	0.000
8-Feb-2016	13:29:39	0.000	0.000
8-Feb-2016	13:33:39	0.000	0.000
8-Feb-2016	13:37:39	0.000	0.000
8-Feb-2016	13:41:39	0.000	0.000
8-Feb-2016	13:45:39	0.000	0.000
8-Feb-2016	13:49:39	0.000	0.000
8-Feb-2016	13:53:39	0.000	0.000
8-Feb-2016	13:57:39	0.001	0.000
8-Feb-2016	14:01:39	0.000	0.001
8-Feb-2016	14:05:39	0.001	0.000
8-Feb-2016	14:09:39	0.000	0.001
8-Feb-2016	14:13:39	0.003	0.001
8-Feb-2016	14:17:39	0.000	0.001
8-Feb-2016	14:21:39	0.000	0.000
8-Feb-2016	14:25:39	0.000	0.000
9-Feb-2016	08:15:14	0.000	0.000
9-Feb-2016	08:19:14	0.000	0.000
9-Feb-2016	08:23:14	0.000	0.000
9-Feb-2016	08:27:14	0.000	0.000
9-Feb-2016	08:31:14	0.000	0.000
9-Feb-2016	08:35:14	0.000	0.000
9-Feb-2016	08:39:14	0.000	0.012
9-Feb-2016	10:39:02	0.035	0.012
9-Feb-2016	10:43:02	0.002	0.012
9-Feb-2016	10:47:02	0.000	0.001
9-Feb-2016	10:51:02	0.000	0.000
9-Feb-2016	10:55:02	0.000	0.000
9-Feb-2016	10:59:02	0.000	0.001
9-Feb-2016	11:03:02	0.003	0.001
9-Feb-2016	11:07:02	0.001	0.001
9-Feb-2016	11:11:02	0.000	0.000
9-Feb-2016	11:15:02	0.000	0.000
9-Feb-2016	11:19:02	0.000	0.000
9-Feb-2016	11:23:02	0.000	0.000
9-Feb-2016	11:27:02	0.000	0.000
9-Feb-2016	11:31:02	0.000	0.000

DUST MONITORING

February 2016

shading indicates values over the threshold

Monitor: 1

Threshold: 0.15 (mg/m^3)

Date	Time	Value (mg/m^3)	TWA (mg/m^3)
9-Feb-2016	11:35:02	0.000	0.000
9-Feb-2016	11:39:02	0.000	0.000
9-Feb-2016	11:43:02	0.000	0.000
9-Feb-2016	11:47:02	0.000	0.000
9-Feb-2016	11:51:02	0.000	0.000
9-Feb-2016	11:55:02	0.000	0.000
9-Feb-2016	11:59:02	0.000	0.000
9-Feb-2016	12:03:02	0.000	0.000
9-Feb-2016	12:07:02	0.000	0.001
9-Feb-2016	12:11:02	0.002	0.001
9-Feb-2016	12:15:02	0.000	0.001
9-Feb-2016	12:19:02	0.000	0.000
9-Feb-2016	12:23:02	0.000	0.000
9-Feb-2016	12:27:02	0.000	0.000
9-Feb-2016	12:31:02	0.000	0.000
9-Feb-2016	12:35:02	0.000	0.000
9-Feb-2016	12:39:02	0.000	0.000
9-Feb-2016	12:43:02	0.000	0.000
9-Feb-2016	12:47:02	0.001	0.000
9-Feb-2016	12:51:02	0.000	0.000
9-Feb-2016	12:55:02	0.000	0.000
9-Feb-2016	12:59:02	0.000	0.000
9-Feb-2016	13:03:02	0.000	0.000
9-Feb-2016	13:07:02	0.000	0.000
9-Feb-2016	13:11:02	0.000	0.000
9-Feb-2016	13:15:02	0.000	0.000
9-Feb-2016	13:19:02	0.000	0.000
9-Feb-2016	13:23:02	0.000	0.000
9-Feb-2016	13:27:02	0.000	0.000
9-Feb-2016	13:31:02	0.000	0.000
9-Feb-2016	13:35:02	0.000	0.000
9-Feb-2016	13:39:02	0.000	0.000
9-Feb-2016	13:43:02	0.000	0.000
9-Feb-2016	13:47:02	0.000	0.000
9-Feb-2016	13:51:02	0.000	0.000
9-Feb-2016	13:55:02	0.000	0.000
9-Feb-2016	13:59:02	0.001	0.000
9-Feb-2016	14:03:02	0.000	0.000
9-Feb-2016	14:07:02	0.000	0.000
9-Feb-2016	14:11:02	0.000	0.000
9-Feb-2016	14:15:02	0.000	0.000

DUST MONITORING

February 2016

shading indicates values over the threshold

Monitor: 1

Threshold: 0.15 (mg/m^3)

Date	Time	Value (mg/m^3)	TWA (mg/m^3)
9-Feb-2016	14:19:02	0.000	0.001
9-Feb-2016	14:23:02	0.003	0.001
9-Feb-2016	14:27:02	0.000	0.001
9-Feb-2016	14:31:02	0.000	0.001
9-Feb-2016	14:35:02	0.002	0.001
9-Feb-2016	14:39:02	0.000	0.002
9-Feb-2016	14:43:02	0.003	0.001
9-Feb-2016	14:47:02	0.000	0.001
9-Feb-2016	14:51:02	0.000	0.000
9-Feb-2016	14:55:02	0.000	0.000
9-Feb-2016	14:59:02	0.000	0.000
9-Feb-2016	15:03:02	0.000	0.000
9-Feb-2016	15:07:02	0.000	0.000
9-Feb-2016	15:11:02	0.000	0.000
9-Feb-2016	15:15:02	0.001	0.000
9-Feb-2016	15:19:02	0.000	0.000
9-Feb-2016	15:23:02	0.000	0.000
9-Feb-2016	15:27:02	0.000	0.000
9-Feb-2016	15:31:02	0.000	0.000
9-Feb-2016	15:35:02	0.000	0.000
9-Feb-2016	15:39:02	0.000	0.000
9-Feb-2016	15:43:02	0.000	0.000
9-Feb-2016	15:47:02	0.000	0.000
9-Feb-2016	15:51:02	0.000	0.000
9-Feb-2016	15:55:02	0.000	0.000
9-Feb-2016	15:59:02	0.000	0.000
9-Feb-2016	16:03:02	0.000	0.000
9-Feb-2016	16:07:02	0.000	0.000
9-Feb-2016	16:11:02	0.000	0.000
9-Feb-2016	16:15:02	0.001	0.000
9-Feb-2016	16:19:02	0.000	0.000
9-Feb-2016	16:23:02	0.000	0.000
9-Feb-2016	16:27:02	0.000	0.007
9-Feb-2016	16:31:02	0.022	0.011
9-Feb-2016	16:35:02	0.010	0.011
9-Feb-2016	16:39:02	0.002	0.004
9-Feb-2016	16:43:02	0.000	0.001
9-Feb-2016	16:47:02	0.001	0.000
9-Feb-2016	16:51:02	0.000	0.001
10-Feb-2016	08:24:06	0.000	0.000
10-Feb-2016	08:28:06	0.000	0.000

DUST MONITORING

February 2016

shading indicates values over the threshold

Monitor: 1

Threshold: 0.15 (mg/m^3)

Date	Time	Value (mg/m^3)	TWA (mg/m^3)
10-Feb-2016	08:32:06	0.000	0.000
10-Feb-2016	08:36:06	0.000	0.000
10-Feb-2016	08:40:06	0.000	0.000
10-Feb-2016	08:44:06	0.000	0.000
10-Feb-2016	08:48:06	0.000	0.000
10-Feb-2016	08:52:06	0.000	0.000
10-Feb-2016	08:56:06	0.000	0.000
10-Feb-2016	09:00:06	0.000	0.000
10-Feb-2016	09:04:06	0.000	0.000
10-Feb-2016	09:08:06	0.000	0.000
10-Feb-2016	09:12:06	0.000	0.000
10-Feb-2016	09:16:06	0.000	0.000
10-Feb-2016	09:20:06	0.000	0.000
10-Feb-2016	09:24:06	0.000	0.000
10-Feb-2016	09:28:06	0.000	0.000
10-Feb-2016	09:32:06	0.000	0.000
10-Feb-2016	09:36:06	0.000	0.000
10-Feb-2016	09:40:06	0.000	0.000
10-Feb-2016	09:44:06	0.000	0.000
10-Feb-2016	09:48:06	0.000	0.000
10-Feb-2016	09:52:06	0.000	0.000
10-Feb-2016	09:56:06	0.000	0.000
10-Feb-2016	10:00:06	0.000	0.000
10-Feb-2016	10:04:06	0.000	0.000
10-Feb-2016	10:08:06	0.000	0.000
10-Feb-2016	10:12:06	0.000	0.000
10-Feb-2016	10:16:06	0.000	0.000
11-Feb-2016	09:45:28	0.013	0.007
11-Feb-2016	09:49:28	0.001	0.005
11-Feb-2016	09:53:28	0.001	0.002
11-Feb-2016	09:57:28	0.003	0.002
11-Feb-2016	10:01:28	0.002	0.002
11-Feb-2016	10:05:28	0.000	0.001
11-Feb-2016	10:09:28	0.001	0.003
11-Feb-2016	10:13:28	0.007	0.003
11-Feb-2016	10:17:28	0.001	0.003
11-Feb-2016	10:21:28	0.001	0.001
11-Feb-2016	10:25:28	0.000	0.000
11-Feb-2016	10:29:28	0.000	0.000
11-Feb-2016	10:33:28	0.000	0.000
11-Feb-2016	10:37:28	0.000	0.000

DUST MONITORING

February 2016

shading indicates values over the threshold

Monitor: 1

Threshold: 0.15 (mg/m^3)

Date	Time	Value (mg/m^3)	TWA (mg/m^3)
11-Feb-2016	10:41:28	0.000	0.000
11-Feb-2016	10:45:28	0.001	0.001
11-Feb-2016	10:49:28	0.001	0.002
11-Feb-2016	10:53:28	0.003	0.002
11-Feb-2016	10:57:28	0.002	0.005
11-Feb-2016	11:01:28	0.010	0.006
11-Feb-2016	11:05:28	0.005	0.006
11-Feb-2016	11:09:28	0.002	0.003
11-Feb-2016	11:13:28	0.002	0.002
11-Feb-2016	11:17:28	0.002	0.005
11-Feb-2016	11:21:28	0.011	0.004
11-Feb-2016	11:25:28	0.000	0.004
11-Feb-2016	11:29:28	0.001	0.002
11-Feb-2016	11:33:28	0.005	0.003
11-Feb-2016	11:37:28	0.002	0.003
11-Feb-2016	11:41:28	0.001	0.001
11-Feb-2016	11:45:28	0.001	0.001
11-Feb-2016	11:49:28	0.001	0.001
11-Feb-2016	11:53:28	0.000	0.000
11-Feb-2016	11:57:28	0.000	0.000
11-Feb-2016	12:01:28	0.000	0.000
11-Feb-2016	12:05:28	0.000	0.000
11-Feb-2016	12:09:28	0.001	0.000
11-Feb-2016	12:13:28	0.000	0.001
11-Feb-2016	12:17:28	0.001	0.000
11-Feb-2016	12:21:28	0.000	0.001
11-Feb-2016	12:25:28	0.001	0.001
11-Feb-2016	12:29:28	0.003	0.002
11-Feb-2016	12:33:28	0.001	0.003
11-Feb-2016	12:37:28	0.005	0.003
11-Feb-2016	12:41:28	0.002	0.002
11-Feb-2016	12:45:28	0.000	0.001
11-Feb-2016	12:49:28	0.000	0.000
11-Feb-2016	12:53:28	0.001	0.000
11-Feb-2016	12:57:28	0.000	0.002
11-Feb-2016	13:01:28	0.006	0.003
11-Feb-2016	13:05:28	0.004	0.004
11-Feb-2016	13:09:28	0.001	0.002
11-Feb-2016	13:13:28	0.000	0.000
11-Feb-2016	13:17:28	0.000	0.000
11-Feb-2016	13:21:28	0.000	0.000

DUST MONITORING

February 2016

shading indicates values over the threshold

Monitor: 1

Threshold: 0.15 (mg/m^3)

Date	Time	Value (mg/m^3)	TWA (mg/m^3)
11-Feb-2016	13:25:28	0.000	0.000
11-Feb-2016	13:29:28	0.000	0.000
11-Feb-2016	13:33:28	0.000	0.001
11-Feb-2016	13:37:28	0.004	0.002
11-Feb-2016	13:41:28	0.003	0.003
11-Feb-2016	13:45:28	0.003	0.002
11-Feb-2016	13:49:28	0.001	0.003
11-Feb-2016	13:53:28	0.005	0.006
11-Feb-2016	13:57:28	0.011	0.007
11-Feb-2016	14:01:28	0.005	0.006
11-Feb-2016	14:05:28	0.003	0.003
11-Feb-2016	14:09:28	0.000	0.001
11-Feb-2016	14:13:28	0.000	0.000
11-Feb-2016	14:17:28	0.000	0.000
11-Feb-2016	14:21:28	0.000	0.000
11-Feb-2016	14:25:28	0.001	0.000
11-Feb-2016	14:29:28	0.000	0.000
11-Feb-2016	14:33:28	0.000	0.000
11-Feb-2016	14:37:28	0.001	0.001
11-Feb-2016	14:41:28	0.002	0.001
11-Feb-2016	14:45:28	0.001	0.002
11-Feb-2016	14:49:28	0.004	0.002
11-Feb-2016	14:53:28	0.000	0.001
11-Feb-2016	14:57:28	0.000	0.000
11-Feb-2016	15:01:28	0.000	0.001
11-Feb-2016	15:05:28	0.004	0.003
11-Feb-2016	15:09:28	0.004	0.004
12-Feb-2016	08:53:03	0.002	0.002
12-Feb-2016	08:57:03	0.002	0.002
12-Feb-2016	09:01:03	0.002	0.002
12-Feb-2016	09:05:03	0.002	0.002
12-Feb-2016	09:09:03	0.001	0.002
12-Feb-2016	09:13:03	0.002	0.002
12-Feb-2016	09:17:03	0.002	0.002
12-Feb-2016	09:21:03	0.001	0.003
12-Feb-2016	09:25:03	0.005	0.004
12-Feb-2016	09:29:03	0.005	0.004
12-Feb-2016	09:33:03	0.003	0.004
12-Feb-2016	09:37:03	0.003	0.003
12-Feb-2016	09:41:03	0.002	0.003
12-Feb-2016	09:45:03	0.005	0.004

DUST MONITORING

February 2016

shading indicates values over the threshold

Monitor: 1

Threshold: 0.15 (mg/m^3)

Date	Time	Value (mg/m^3)	TWA (mg/m^3)
12-Feb-2016	09:49:03	0.004	0.004
12-Feb-2016	09:53:03	0.003	0.003
12-Feb-2016	09:57:03	0.002	0.002
12-Feb-2016	10:01:03	0.001	0.001
12-Feb-2016	10:05:03	0.001	0.002
12-Feb-2016	10:09:03	0.003	0.004
12-Feb-2016	10:13:03	0.007	0.005
12-Feb-2016	10:17:03	0.005	0.005
12-Feb-2016	10:21:03	0.003	0.003
12-Feb-2016	10:25:03	0.001	0.003
12-Feb-2016	10:29:03	0.005	0.004
12-Feb-2016	10:33:03	0.007	0.005
12-Feb-2016	10:37:03	0.003	0.004
12-Feb-2016	10:41:03	0.001	0.002
12-Feb-2016	10:45:03	0.003	0.005
12-Feb-2016	10:49:03	0.010	0.005
12-Feb-2016	10:53:03	0.001	0.006
12-Feb-2016	10:57:03	0.008	0.006
12-Feb-2016	11:01:03	0.008	0.006
12-Feb-2016	11:05:03	0.003	0.005
12-Feb-2016	11:09:03	0.003	0.003
12-Feb-2016	11:13:03	0.003	0.003
12-Feb-2016	11:17:03	0.002	0.003
12-Feb-2016	11:21:03	0.003	0.003
12-Feb-2016	11:25:03	0.004	0.003
12-Feb-2016	11:29:03	0.003	0.004
12-Feb-2016	11:33:03	0.004	0.005
12-Feb-2016	11:37:03	0.007	0.005
12-Feb-2016	11:41:03	0.003	0.004
12-Feb-2016	11:45:03	0.003	0.003
12-Feb-2016	11:49:03	0.003	0.003
12-Feb-2016	11:53:03	0.004	0.004
12-Feb-2016	11:57:03	0.004	0.004
12-Feb-2016	12:01:03	0.003	0.003
12-Feb-2016	12:05:03	0.003	0.004
12-Feb-2016	12:09:03	0.006	0.005
12-Feb-2016	12:13:03	0.005	0.006
12-Feb-2016	12:17:03	0.007	0.006
12-Feb-2016	12:21:03	0.005	0.005
12-Feb-2016	12:25:03	0.004	0.005
12-Feb-2016	12:29:03	0.005	0.005

DUST MONITORING

February 2016

shading indicates values over the threshold

Monitor: 1

Threshold: 0.15 (mg/m^3)

Date	Time	Value (mg/m^3)	TWA (mg/m^3)
12-Feb-2016	12:33:03	0.005	0.005
12-Feb-2016	12:37:03	0.006	0.006
12-Feb-2016	12:41:03	0.008	0.009
12-Feb-2016	12:45:03	0.014	0.012
12-Feb-2016	12:49:03	0.014	0.012
12-Feb-2016	12:53:03	0.008	0.011
12-Feb-2016	12:57:03	0.010	0.009
12-Feb-2016	13:01:03	0.008	0.009
12-Feb-2016	13:05:03	0.009	0.008
12-Feb-2016	13:09:03	0.007	0.008
12-Feb-2016	13:13:03	0.009	0.008
12-Feb-2016	13:17:03	0.009	0.010
12-Feb-2016	13:21:03	0.013	0.011
12-Feb-2016	13:25:03	0.012	0.012
12-Feb-2016	13:29:03	0.011	0.013
12-Feb-2016	13:33:03	0.016	0.012
12-Feb-2016	13:37:03	0.010	0.011
12-Feb-2016	13:41:03	0.008	0.009
12-Feb-2016	13:45:03	0.010	0.008
12-Feb-2016	13:49:03	0.007	0.008
12-Feb-2016	13:53:03	0.006	0.007
12-Feb-2016	13:57:03	0.007	0.007
12-Feb-2016	14:01:03	0.007	0.007
12-Feb-2016	14:05:03	0.008	0.008
12-Feb-2016	14:09:03	0.008	0.008
12-Feb-2016	14:13:03	0.009	0.009
12-Feb-2016	14:17:03	0.010	0.008
12-Feb-2016	14:21:03	0.006	0.008
12-Feb-2016	14:25:03	0.009	0.010
12-Feb-2016	14:29:03	0.016	0.013
12-Feb-2016	14:39:38	0.014	0.028
12-Feb-2016	14:43:38	0.054	0.024
12-Feb-2016	14:47:38	0.005	0.024
12-Feb-2016	14:51:38	0.012	0.009
12-Feb-2016	14:55:38	0.009	0.010
12-Feb-2016	14:59:38	0.008	0.008
12-Feb-2016	15:03:38	0.008	0.008
12-Feb-2016	15:07:38	0.007	0.009
12-Feb-2016	15:11:38	0.013	0.011
12-Feb-2016	15:15:38	0.014	0.010
12-Feb-2016	15:19:38	0.003	0.009

DUST MONITORING

February 2016

shading indicates values over the threshold

Monitor: 1

Threshold: 0.15 (mg/m^3)

Date	Time	Value (mg/m^3)	TWA (mg/m^3)
12-Feb-2016	15:23:38	0.009	0.006
12-Feb-2016	15:27:38	0.007	0.008
12-Feb-2016	15:31:38	0.009	0.008
12-Feb-2016	15:35:38	0.009	0.007
12-Feb-2016	15:39:38	0.004	0.006
12-Feb-2016	15:43:38	0.004	0.007
12-Feb-2016	15:47:38	0.014	0.010
12-Feb-2016	15:51:38	0.013	0.013
12-Feb-2016	15:55:38	0.012	0.010
12-Feb-2016	15:59:38	0.004	0.006
12-Feb-2016	16:03:38	0.001	0.002
12-Feb-2016	16:07:38	0.001	0.001
12-Feb-2016	16:11:38	0.000	0.001
17-Feb-2016	09:45:52	0.000	0.000
17-Feb-2016	09:49:52	0.000	0.000
17-Feb-2016	09:53:52	0.000	0.000
17-Feb-2016	09:57:52	0.000	0.000
17-Feb-2016	10:01:52	0.000	0.000
17-Feb-2016	10:05:52	0.000	0.000
17-Feb-2016	10:09:52	0.000	0.000
17-Feb-2016	10:13:52	0.000	0.000
17-Feb-2016	10:17:52	0.000	0.000
17-Feb-2016	10:21:52	0.000	0.000
17-Feb-2016	10:25:52	0.000	0.000
17-Feb-2016	10:29:52	0.000	0.000
17-Feb-2016	10:33:52	0.000	0.000
17-Feb-2016	10:37:52	0.000	0.002
17-Feb-2016	10:41:52	0.005	0.002
17-Feb-2016	10:45:52	0.000	0.002
17-Feb-2016	10:49:52	0.000	0.000
17-Feb-2016	10:53:52	0.000	0.000
17-Feb-2016	10:57:52	0.000	0.000
17-Feb-2016	11:01:52	0.000	0.000
17-Feb-2016	11:05:52	0.000	0.000
17-Feb-2016	11:09:52	0.000	0.000
17-Feb-2016	11:13:52	0.000	0.000
17-Feb-2016	11:17:52	0.000	0.000
17-Feb-2016	11:21:52	0.000	0.000
17-Feb-2016	11:25:52	0.000	0.000
17-Feb-2016	11:29:52	0.000	0.000
17-Feb-2016	11:33:52	0.000	0.000

DUST MONITORING

February 2016

shading indicates values over the threshold

Monitor: 1

Threshold: 0.15 (mg/m^3)

Date	Time	Value (mg/m^3)	TWA (mg/m^3)
17-Feb-2016	11:37:52	0.000	0.000
17-Feb-2016	11:41:52	0.000	0.000
17-Feb-2016	11:45:52	0.000	0.000
17-Feb-2016	11:49:52	0.000	0.000
17-Feb-2016	11:53:52	0.000	0.000
17-Feb-2016	11:57:52	0.000	0.000
17-Feb-2016	12:01:52	0.000	0.000
17-Feb-2016	12:05:52	0.000	0.000
17-Feb-2016	12:09:52	0.000	0.000
17-Feb-2016	12:13:52	0.000	0.000
17-Feb-2016	12:17:52	0.000	0.000
17-Feb-2016	12:21:52	0.000	0.000
17-Feb-2016	12:25:52	0.000	0.000
17-Feb-2016	12:29:52	0.000	0.000
17-Feb-2016	12:33:52	0.000	0.000
17-Feb-2016	12:37:52	0.000	0.000
17-Feb-2016	12:41:52	0.000	0.000
17-Feb-2016	12:45:52	0.000	0.000
17-Feb-2016	12:49:52	0.000	0.000
17-Feb-2016	12:53:52	0.000	0.000
17-Feb-2016	12:57:52	0.000	0.000
17-Feb-2016	13:01:52	0.000	0.000
17-Feb-2016	13:05:52	0.000	0.000
17-Feb-2016	13:09:52	0.000	0.000
17-Feb-2016	13:13:52	0.000	0.000
17-Feb-2016	13:17:52	0.000	0.000
17-Feb-2016	13:21:52	0.000	0.000
17-Feb-2016	13:25:52	0.000	0.000
17-Feb-2016	13:29:52	0.000	0.000
17-Feb-2016	13:33:52	0.000	0.000
17-Feb-2016	13:37:52	0.000	0.000
17-Feb-2016	13:41:52	0.000	0.000
17-Feb-2016	13:45:52	0.000	0.000
17-Feb-2016	13:49:52	0.000	0.000
17-Feb-2016	13:53:52	0.000	0.000
17-Feb-2016	13:57:52	0.000	0.000
17-Feb-2016	14:01:52	0.000	0.000
17-Feb-2016	14:05:52	0.000	0.000
17-Feb-2016	14:09:52	0.000	0.000
17-Feb-2016	14:13:52	0.000	0.000
17-Feb-2016	14:17:52	0.000	0.000

DUST MONITORING

February 2016

shading indicates values over the threshold

Monitor: 1

Threshold: 0.15 (mg/m^3)

Date	Time	Value (mg/m^3)	TWA (mg/m^3)
17-Feb-2016	14:21:52	0.000	0.000
17-Feb-2016	14:25:52	0.000	0.000
17-Feb-2016	14:29:52	0.000	0.000
17-Feb-2016	14:33:52	0.000	0.000
17-Feb-2016	14:37:52	0.000	0.000
17-Feb-2016	14:41:52	0.000	0.000
17-Feb-2016	14:45:52	0.000	0.000
17-Feb-2016	14:49:52	0.000	0.000
17-Feb-2016	14:53:52	0.000	0.000
18-Feb-2016	09:30:06	0.000	0.000
18-Feb-2016	09:34:06	0.000	0.000
18-Feb-2016	09:38:06	0.000	0.000
18-Feb-2016	09:42:06	0.000	0.000
18-Feb-2016	09:46:06	0.000	0.000
18-Feb-2016	09:50:06	0.000	0.000
18-Feb-2016	09:54:06	0.000	0.000
18-Feb-2016	09:58:06	0.000	0.000
18-Feb-2016	10:02:06	0.000	0.000
18-Feb-2016	10:06:06	0.000	0.000
18-Feb-2016	10:10:06	0.000	0.000
18-Feb-2016	10:14:06	0.000	0.000
18-Feb-2016	10:18:06	0.000	0.000
18-Feb-2016	10:22:06	0.000	0.000
18-Feb-2016	10:26:06	0.000	0.000
18-Feb-2016	10:30:06	0.000	0.000
18-Feb-2016	10:34:06	0.000	0.000
18-Feb-2016	10:38:06	0.000	0.000
18-Feb-2016	10:42:06	0.001	0.000
18-Feb-2016	10:46:06	0.000	0.000
18-Feb-2016	10:50:06	0.000	0.000
18-Feb-2016	10:54:06	0.000	0.000
18-Feb-2016	10:58:06	0.000	0.000
18-Feb-2016	11:02:06	0.000	0.000
18-Feb-2016	11:06:06	0.000	0.000
18-Feb-2016	11:10:06	0.000	0.000
18-Feb-2016	11:14:06	0.000	0.000
18-Feb-2016	11:18:06	0.000	0.000
18-Feb-2016	11:22:06	0.000	0.000
18-Feb-2016	11:26:06	0.000	0.000
18-Feb-2016	11:30:06	0.000	0.000
18-Feb-2016	11:34:06	0.000	0.000

DUST MONITORING

February 2016

shading indicates values over the threshold

Monitor: 1

Threshold: 0.15 (mg/m^3)

Date	Time	Value (mg/m^3)	TWA (mg/m^3)
18-Feb-2016	11:38:06	0.000	0.000
18-Feb-2016	11:42:06	0.000	0.000
18-Feb-2016	11:46:06	0.000	0.000
18-Feb-2016	11:50:06	0.000	0.000
18-Feb-2016	11:54:06	0.000	0.000
18-Feb-2016	11:58:06	0.000	0.000
18-Feb-2016	12:02:06	0.000	0.000
18-Feb-2016	12:06:06	0.000	0.000
18-Feb-2016	12:10:06	0.000	0.000
18-Feb-2016	12:14:06	0.000	0.000
18-Feb-2016	12:18:06	0.000	0.000
18-Feb-2016	12:22:06	0.000	0.000
18-Feb-2016	12:26:06	0.000	0.000
18-Feb-2016	12:30:06	0.000	0.000
18-Feb-2016	12:34:06	0.000	0.000
18-Feb-2016	12:38:06	0.000	0.000
18-Feb-2016	12:42:06	0.000	0.000
18-Feb-2016	12:46:06	0.000	0.000
18-Feb-2016	12:50:06	0.000	0.000
18-Feb-2016	12:54:06	0.000	0.000
18-Feb-2016	12:58:06	0.000	0.000
18-Feb-2016	13:02:06	0.000	0.000
18-Feb-2016	13:06:06	0.000	0.000
18-Feb-2016	13:10:06	0.000	0.000
18-Feb-2016	13:14:06	0.000	0.000
18-Feb-2016	13:18:06	0.000	0.000
18-Feb-2016	13:22:06	0.000	0.000
18-Feb-2016	13:26:06	0.000	0.000
18-Feb-2016	13:30:06	0.000	0.000
18-Feb-2016	13:34:06	0.000	0.000
18-Feb-2016	13:38:06	0.000	0.000
18-Feb-2016	13:42:06	0.000	0.000
18-Feb-2016	13:46:06	0.000	0.000
18-Feb-2016	13:50:06	0.000	0.000
18-Feb-2016	13:54:06	0.000	0.000
18-Feb-2016	13:58:06	0.001	0.000
18-Feb-2016	14:02:06	0.000	0.000
18-Feb-2016	14:06:06	0.000	0.000
18-Feb-2016	14:10:06	0.001	0.000
18-Feb-2016	14:14:06	0.000	0.000
18-Feb-2016	14:18:06	0.000	0.000

DUST MONITORING

February 2016

shading indicates values over the threshold

Monitor: 1

Threshold: 0.15 (mg/m^3)

Date	Time	Value (mg/m^3)	TWA (mg/m^3)
18-Feb-2016	14:22:06	0.000	0.000
18-Feb-2016	14:26:06	0.000	0.000
18-Feb-2016	14:30:06	0.000	0.000
18-Feb-2016	14:34:06	0.000	0.000
18-Feb-2016	14:38:06	0.000	0.000
18-Feb-2016	14:42:06	0.000	0.000
18-Feb-2016	14:46:06	0.000	0.000
18-Feb-2016	14:50:06	0.000	0.000
18-Feb-2016	14:54:06	0.000	0.000
18-Feb-2016	14:58:06	0.000	0.000
18-Feb-2016	15:02:06	0.000	0.000
18-Feb-2016	15:06:06	0.000	0.000
18-Feb-2016	15:10:06	0.000	0.000
18-Feb-2016	15:14:06	0.000	0.000
18-Feb-2016	15:18:06	0.000	0.000
18-Feb-2016	15:22:06	0.000	0.000
18-Feb-2016	15:26:06	0.000	0.000
18-Feb-2016	15:30:06	0.000	0.000
18-Feb-2016	15:34:06	0.000	0.000
18-Feb-2016	15:38:06	0.000	0.000
18-Feb-2016	15:42:06	0.000	0.000
18-Feb-2016	15:46:06	0.000	0.000
18-Feb-2016	15:50:06	0.000	0.000
18-Feb-2016	15:54:06	0.000	0.000
18-Feb-2016	15:58:06	0.000	0.000
18-Feb-2016	16:02:06	0.000	0.000
18-Feb-2016	16:06:06	0.000	0.003
18-Feb-2016	16:10:06	0.009	0.003
18-Feb-2016	16:14:06	0.000	0.003
18-Feb-2016	16:18:06	0.000	0.000
18-Feb-2016	16:22:06	0.000	0.000
18-Feb-2016	16:26:06	0.000	0.000
18-Feb-2016	16:30:06	0.000	0.000
18-Feb-2016	16:34:06	0.000	0.000
18-Feb-2016	16:38:06	0.000	0.000
18-Feb-2016	16:42:06	0.000	0.000
18-Feb-2016	16:46:06	0.001	0.000
18-Feb-2016	16:50:06	0.000	0.000
18-Feb-2016	16:54:06	0.000	0.000
18-Feb-2016	16:58:06	0.000	0.000
18-Feb-2016	17:02:06	0.000	0.000

DUST MONITORING

February 2016

shading indicates values over the threshold

Monitor: 1

Threshold: 0.15 (mg/m^3)

Date	Time	Value (mg/m^3)	TWA (mg/m^3)
18-Feb-2016	17:06:06	0.000	0.003
18-Feb-2016	17:10:06	0.009	0.005
18-Feb-2016	17:14:06	0.006	0.005
18-Feb-2016	17:18:06	0.000	0.002
18-Feb-2016	17:22:06	0.000	0.000
18-Feb-2016	17:26:06	0.000	0.000
18-Feb-2016	17:30:06	0.000	0.000
18-Feb-2016	17:34:06	0.000	0.000
18-Feb-2016	17:38:06	0.000	0.000
18-Feb-2016	17:42:06	0.000	0.000
18-Feb-2016	17:46:06	0.000	0.000
18-Feb-2016	17:50:06	0.000	0.000
18-Feb-2016	17:54:06	0.000	0.000
18-Feb-2016	17:58:06	0.000	0.000
18-Feb-2016	18:02:06	0.000	0.000
18-Feb-2016	18:06:06	0.000	0.000
18-Feb-2016	18:10:06	0.000	0.000
18-Feb-2016	18:14:06	0.000	0.000
18-Feb-2016	18:18:06	0.000	0.000
18-Feb-2016	18:22:06	0.000	0.000
18-Feb-2016	18:26:06	0.000	0.000
18-Feb-2016	18:30:06	0.000	0.000
18-Feb-2016	18:34:06	0.000	0.000
19-Feb-2016	13:47:02	0.001	0.001
19-Feb-2016	13:51:02	0.000	0.002
19-Feb-2016	13:55:02	0.004	0.001
19-Feb-2016	13:59:02	0.000	0.001
19-Feb-2016	14:03:02	0.000	0.000
19-Feb-2016	14:07:02	0.000	0.000
19-Feb-2016	14:11:02	0.000	0.000
19-Feb-2016	14:15:02	0.000	0.000
19-Feb-2016	14:19:02	0.000	0.000
19-Feb-2016	14:23:02	0.000	0.000
19-Feb-2016	14:27:02	0.000	0.000
19-Feb-2016	14:31:02	0.000	0.000
19-Feb-2016	14:35:02	0.000	0.000
19-Feb-2016	14:39:02	0.000	0.000
19-Feb-2016	14:43:02	0.000	0.000
19-Feb-2016	14:47:02	0.000	0.000
19-Feb-2016	14:51:02	0.000	0.000
19-Feb-2016	14:55:02	0.000	0.000

DUST MONITORING

February 2016

shading indicates values over the threshold

Monitor: 1

Threshold: 0.15 (mg/m^3)

Date	Time	Value (mg/m^3)	TWA (mg/m^3)
19-Feb-2016	14:59:02	0.000	0.000
19-Feb-2016	15:03:02	0.000	0.000
19-Feb-2016	15:07:02	0.000	0.000
19-Feb-2016	15:11:02	0.000	0.000
19-Feb-2016	15:15:02	0.000	0.000
19-Feb-2016	15:19:02	0.000	0.000
19-Feb-2016	15:23:02	0.000	0.000
19-Feb-2016	15:27:02	0.000	0.000
19-Feb-2016	15:31:02	0.000	0.000
19-Feb-2016	15:35:02	0.000	0.000
19-Feb-2016	15:39:02	0.000	0.000
19-Feb-2016	15:43:02	0.000	0.000
19-Feb-2016	15:47:02	0.000	0.000
19-Feb-2016	15:51:02	0.001	0.000
19-Feb-2016	15:55:02	0.000	0.000
19-Feb-2016	15:59:02	0.000	0.000
19-Feb-2016	16:03:02	0.000	0.000
19-Feb-2016	16:07:02	0.000	0.000
25-Feb-2016	08:06:31	0.000	0.000
25-Feb-2016	08:10:31	0.000	0.000
25-Feb-2016	08:14:31	0.001	0.000
25-Feb-2016	08:18:31	0.000	0.000
25-Feb-2016	08:22:31	0.000	0.000
25-Feb-2016	08:26:31	0.000	0.000
25-Feb-2016	08:30:31	0.000	0.000
25-Feb-2016	08:34:31	0.000	0.000
25-Feb-2016	08:38:31	0.000	0.000
25-Feb-2016	08:42:31	0.000	0.000
25-Feb-2016	08:46:31	0.000	0.000
25-Feb-2016	08:50:31	0.000	0.000
25-Feb-2016	08:54:31	0.000	0.000
25-Feb-2016	08:58:31	0.000	0.000
25-Feb-2016	09:02:31	0.000	0.000
25-Feb-2016	09:06:31	0.000	0.000
25-Feb-2016	09:10:31	0.000	0.000
25-Feb-2016	09:14:31	0.000	0.000
25-Feb-2016	09:18:31	0.000	0.000
25-Feb-2016	09:22:31	0.000	0.000
25-Feb-2016	09:26:31	0.000	0.000
25-Feb-2016	09:30:31	0.000	0.000
25-Feb-2016	09:34:31	0.000	0.000

DUST MONITORING

February 2016

shading indicates values over the threshold

Monitor: 1

Threshold: 0.15 (mg/m^3)

Date	Time	Value (mg/m^3)	TWA (mg/m^3)
25-Feb-2016	09:38:31	0.000	0.000
25-Feb-2016	09:42:31	0.000	0.000
25-Feb-2016	09:46:31	0.000	0.000
25-Feb-2016	09:50:31	0.000	0.000
25-Feb-2016	09:54:31	0.000	0.000
25-Feb-2016	09:58:31	0.000	0.000
25-Feb-2016	10:02:31	0.000	0.000
25-Feb-2016	10:06:31	0.000	0.000
25-Feb-2016	10:10:31	0.000	0.000
25-Feb-2016	10:14:31	0.000	0.000
25-Feb-2016	10:18:31	0.000	0.000
25-Feb-2016	10:22:31	0.000	0.000
25-Feb-2016	10:26:31	0.000	0.000
25-Feb-2016	10:30:31	0.000	0.000
25-Feb-2016	10:34:31	0.000	0.000
25-Feb-2016	10:38:31	0.000	0.000
25-Feb-2016	10:42:31	0.000	0.000
25-Feb-2016	10:46:31	0.000	0.000
25-Feb-2016	10:50:31	0.000	0.000
25-Feb-2016	10:54:31	0.000	0.000
25-Feb-2016	10:58:31	0.000	0.000
25-Feb-2016	11:02:31	0.000	0.000
25-Feb-2016	11:06:31	0.000	0.000
25-Feb-2016	11:10:31	0.000	0.000
25-Feb-2016	11:14:31	0.000	0.000
25-Feb-2016	11:18:31	0.000	0.000
25-Feb-2016	11:22:31	0.000	0.000
25-Feb-2016	11:26:31	0.000	0.000
25-Feb-2016	11:30:31	0.000	0.000
25-Feb-2016	11:34:31	0.000	0.000
25-Feb-2016	11:38:31	0.000	0.000
25-Feb-2016	11:42:31	0.000	0.000
25-Feb-2016	11:46:31	0.000	0.000
25-Feb-2016	11:50:31	0.000	0.000
25-Feb-2016	11:54:31	0.000	0.000
25-Feb-2016	11:58:31	0.000	0.000
25-Feb-2016	12:02:31	0.000	0.000
25-Feb-2016	12:06:31	0.000	0.000
25-Feb-2016	12:10:31	0.000	0.000
25-Feb-2016	12:14:31	0.000	0.000
25-Feb-2016	12:18:31	0.000	0.000

DUST MONITORING

February 2016

shading indicates values over the threshold

Monitor: 1

Threshold: 0.15 (mg/m^3)

Date	Time	Value (mg/m^3)	TWA (mg/m^3)
25-Feb-2016	12:22:31	0.000	0.000
25-Feb-2016	12:26:31	0.000	0.000
25-Feb-2016	12:30:31	0.000	0.000
25-Feb-2016	12:34:31	0.000	0.000
25-Feb-2016	12:38:31	0.000	0.000
25-Feb-2016	12:42:31	0.000	0.000
25-Feb-2016	12:46:31	0.000	0.000
25-Feb-2016	12:50:31	0.000	0.000
25-Feb-2016	12:54:31	0.000	0.000
25-Feb-2016	12:58:31	0.000	0.000
25-Feb-2016	13:02:31	0.000	0.000
25-Feb-2016	13:06:31	0.000	0.000
25-Feb-2016	13:10:31	0.000	0.000
25-Feb-2016	13:14:31	0.000	0.000
25-Feb-2016	13:18:31	0.000	0.000
25-Feb-2016	13:22:31	0.000	0.000
25-Feb-2016	13:26:31	0.000	0.000
25-Feb-2016	13:30:31	0.000	0.000
25-Feb-2016	13:34:31	0.000	0.000
25-Feb-2016	13:38:31	0.000	0.000
25-Feb-2016	13:42:31	0.000	0.000
25-Feb-2016	13:46:31	0.000	0.000
25-Feb-2016	13:50:31	0.000	0.000
25-Feb-2016	13:54:31	0.000	0.000
25-Feb-2016	13:58:31	0.000	0.000
25-Feb-2016	14:02:31	0.000	0.000
25-Feb-2016	14:06:31	0.000	0.000
25-Feb-2016	14:10:31	0.000	0.000
25-Feb-2016	14:14:31	0.000	0.000
25-Feb-2016	14:18:31	0.000	0.000
25-Feb-2016	14:22:31	0.000	0.000
25-Feb-2016	14:26:31	0.000	0.000
25-Feb-2016	14:30:31	0.000	0.000
25-Feb-2016	14:34:31	0.000	0.000
25-Feb-2016	14:38:31	0.000	0.000
25-Feb-2016	14:42:31	0.000	0.000
25-Feb-2016	14:46:31	0.000	0.000
25-Feb-2016	14:50:31	0.000	0.000
25-Feb-2016	14:54:31	0.000	0.000
25-Feb-2016	14:58:31	0.000	0.000
25-Feb-2016	15:02:31	0.000	0.000

DUST MONITORING

February 2016

shading indicates values over the threshold

Monitor: 1

Threshold: 0.15 (mg/m^3)

Date	Time	Value (mg/m^3)	TWA (mg/m^3)
25-Feb-2016	15:06:31	0.000	0.000
25-Feb-2016	15:10:31	0.000	0.000
25-Feb-2016	15:14:31	0.000	0.000
25-Feb-2016	15:18:31	0.000	0.000
25-Feb-2016	15:22:31	0.000	0.000
25-Feb-2016	15:26:31	0.000	0.000
25-Feb-2016	15:30:31	0.000	0.000
25-Feb-2016	15:34:31	0.000	0.000
25-Feb-2016	15:38:31	0.000	0.000
25-Feb-2016	15:42:31	0.000	0.000
25-Feb-2016	15:46:31	0.000	0.000
25-Feb-2016	15:50:31	0.000	0.000
25-Feb-2016	15:54:31	0.000	0.000
25-Feb-2016	15:58:31	0.000	0.000
25-Feb-2016	16:02:31	0.000	0.000
29-Feb-2016	09:36:30	0.000	0.000
29-Feb-2016	09:40:30	0.000	0.000
29-Feb-2016	09:44:30	0.000	0.000
29-Feb-2016	09:48:30	0.000	0.000
29-Feb-2016	09:52:30	0.000	0.000
29-Feb-2016	09:56:30	0.000	0.000
29-Feb-2016	10:00:30	0.000	0.000
29-Feb-2016	10:04:30	0.000	0.000
29-Feb-2016	10:08:30	0.000	0.000
29-Feb-2016	10:12:30	0.000	0.000
29-Feb-2016	10:16:30	0.000	0.000
29-Feb-2016	10:20:30	0.000	0.000
29-Feb-2016	10:24:30	0.000	0.000
29-Feb-2016	10:28:30	0.000	0.000
29-Feb-2016	10:32:30	0.000	0.000
29-Feb-2016	10:36:30	0.000	0.001
29-Feb-2016	10:40:30	0.002	0.001
29-Feb-2016	10:44:30	0.000	0.005
29-Feb-2016	10:48:30	0.012	0.004
29-Feb-2016	10:52:30	0.000	0.004
29-Feb-2016	10:56:30	0.000	0.000
29-Feb-2016	11:00:30	0.000	0.000
29-Feb-2016	11:04:30	0.001	0.000
29-Feb-2016	11:08:30	0.000	0.000
29-Feb-2016	11:12:30	0.000	0.000
29-Feb-2016	11:16:30	0.000	0.000

DUST MONITORING

February 2016

shading indicates values over the threshold

Monitor: 1

Threshold: 0.15 (mg/m^3)

Date	Time	Value (mg/m^3)	TWA (mg/m^3)
29-Feb-2016	11:20:30	0.000	0.000
29-Feb-2016	11:24:30	0.000	0.000
29-Feb-2016	11:28:30	0.000	0.000
29-Feb-2016	11:32:30	0.000	0.000
29-Feb-2016	11:36:30	0.000	0.000
29-Feb-2016	11:40:30	0.000	0.000
29-Feb-2016	11:44:30	0.000	0.000
29-Feb-2016	11:48:30	0.000	0.000
29-Feb-2016	11:52:30	0.000	0.000
29-Feb-2016	11:56:30	0.000	0.003
29-Feb-2016	12:00:30	0.009	0.003
29-Feb-2016	12:04:30	0.000	0.003
29-Feb-2016	12:08:30	0.000	0.000
29-Feb-2016	12:12:30	0.000	0.000
29-Feb-2016	12:16:30	0.000	0.000
29-Feb-2016	12:20:30	0.000	0.000
29-Feb-2016	12:24:30	0.000	0.000
29-Feb-2016	12:28:30	0.000	0.000
29-Feb-2016	12:32:30	0.000	0.000
29-Feb-2016	12:36:30	0.000	0.000
29-Feb-2016	12:40:30	0.000	0.000
29-Feb-2016	12:44:30	0.000	0.000
29-Feb-2016	12:48:30	0.000	0.000
29-Feb-2016	12:52:30	0.000	0.000
29-Feb-2016	12:56:30	0.000	0.000
29-Feb-2016	13:00:30	0.000	0.000
29-Feb-2016	13:04:30	0.000	0.000
29-Feb-2016	13:08:30	0.000	0.000
29-Feb-2016	13:12:30	0.000	0.000
29-Feb-2016	13:16:30	0.000	0.000
29-Feb-2016	13:20:30	0.000	0.938
29-Feb-2016	13:24:30	2.813	0.938
29-Feb-2016	13:28:30	0.000	0.938
29-Feb-2016	13:32:30	0.002	0.001
29-Feb-2016	13:36:30	0.000	0.001
29-Feb-2016	13:40:30	0.000	0.000
29-Feb-2016	13:44:30	0.000	0.000
29-Feb-2016	13:48:30	0.000	0.000
29-Feb-2016	13:52:30	0.000	0.000
29-Feb-2016	13:56:30	0.000	0.000
29-Feb-2016	14:00:30	0.000	0.000

DUST MONITORING

February 2016

shading indicates values over the threshold

Monitor: 1

Threshold: 0.15 (mg/m^3)

Date	Time	Value (mg/m^3)	TWA (mg/m^3)
29-Feb-2016	14:04:30	0.000	0.000
29-Feb-2016	14:08:30	0.000	0.000
29-Feb-2016	14:12:30	0.000	0.000
29-Feb-2016	14:16:30	0.000	0.000
29-Feb-2016	14:20:30	0.000	0.000
29-Feb-2016	14:24:30	0.000	0.000
29-Feb-2016	14:28:30	0.000	0.000
29-Feb-2016	14:32:30	0.000	0.000
29-Feb-2016	14:36:30	0.000	0.000
29-Feb-2016	14:40:30	0.000	0.000
29-Feb-2016	14:44:30	0.000	0.000
29-Feb-2016	14:48:30	0.000	0.000
29-Feb-2016	14:52:30	0.000	0.000
29-Feb-2016	14:56:30	0.000	0.000
29-Feb-2016	15:00:30	0.000	0.000
29-Feb-2016	15:04:30	0.000	0.000
29-Feb-2016	15:08:30	0.000	0.000
29-Feb-2016	15:12:30	0.000	0.000
29-Feb-2016	15:16:30	0.000	0.000
29-Feb-2016	15:20:30	0.000	0.000
29-Feb-2016	15:24:30	0.000	0.000
29-Feb-2016	15:28:30	0.000	0.000
29-Feb-2016	15:32:30	0.000	0.000
29-Feb-2016	15:36:30	0.000	0.000
29-Feb-2016	15:40:30	0.001	0.000
29-Feb-2016	15:44:30	0.000	0.000
29-Feb-2016	15:48:30	0.000	0.000
29-Feb-2016	15:52:30	0.000	0.000
29-Feb-2016	15:56:30	0.000	0.000
29-Feb-2016	16:00:30	0.000	0.000
29-Feb-2016	16:04:30	0.000	0.000
29-Feb-2016	16:08:30	0.000	0.000
29-Feb-2016	16:12:30	0.000	0.000
29-Feb-2016	16:16:30	0.000	0.000
29-Feb-2016	16:20:30	0.000	0.000
29-Feb-2016	16:24:30	0.000	0.000
29-Feb-2016	16:28:30	0.000	0.000
29-Feb-2016	16:32:30	0.000	0.000
29-Feb-2016	16:36:30	0.000	0.000
29-Feb-2016	16:40:30	0.000	0.000
29-Feb-2016	16:44:30	0.000	0.000

DUST MONITORING

February 2016

shading indicates values over the threshold

Monitor: 2

Threshold: 0.15 (mg/m^3)

Date	Time	Value (mg/m^3)	TWA (mg/m^3)
2-Feb-2016	08:20:40	0.007	0.008
2-Feb-2016	08:24:40	0.009	0.009
2-Feb-2016	08:28:40	0.010	0.010
2-Feb-2016	08:32:40	0.012	0.012
2-Feb-2016	08:36:40	0.014	0.014
2-Feb-2016	08:40:40	0.015	0.015
2-Feb-2016	08:44:40	0.017	0.017
2-Feb-2016	08:48:40	0.019	0.018
2-Feb-2016	08:52:40	0.018	0.018
2-Feb-2016	08:56:40	0.018	0.018
2-Feb-2016	09:00:40	0.018	0.018
2-Feb-2016	09:04:40	0.017	0.017
2-Feb-2016	09:08:40	0.016	0.017
2-Feb-2016	09:12:40	0.017	0.016
2-Feb-2016	09:16:40	0.015	0.016
2-Feb-2016	09:20:40	0.015	0.015
2-Feb-2016	09:24:40	0.014	0.015
2-Feb-2016	09:28:40	0.015	0.014
2-Feb-2016	09:32:40	0.012	0.013
2-Feb-2016	09:36:40	0.011	0.011
2-Feb-2016	09:40:40	0.010	0.010
2-Feb-2016	09:44:40	0.009	0.009
2-Feb-2016	09:48:40	0.009	0.009
2-Feb-2016	09:52:40	0.009	0.008
2-Feb-2016	09:56:40	0.007	0.007
2-Feb-2016	10:00:40	0.006	0.006
2-Feb-2016	10:04:40	0.006	0.006
2-Feb-2016	10:08:40	0.006	0.006
2-Feb-2016	10:12:40	0.005	0.005
2-Feb-2016	10:16:40	0.005	0.005
2-Feb-2016	10:20:40	0.005	0.005
2-Feb-2016	10:24:40	0.006	0.005
2-Feb-2016	10:28:40	0.005	0.005
2-Feb-2016	10:32:40	0.004	0.004
2-Feb-2016	10:36:40	0.004	0.004
2-Feb-2016	10:40:40	0.004	0.004
2-Feb-2016	10:44:40	0.004	0.004
2-Feb-2016	10:48:40	0.005	0.005
2-Feb-2016	10:52:40	0.005	0.005
2-Feb-2016	10:56:40	0.005	0.005
2-Feb-2016	11:00:40	0.004	0.004

DUST MONITORING

February 2016

shading indicates values over the threshold

Monitor: 2

Threshold: 0.15 (mg/m^3)

Date	Time	Value (mg/m^3)	TWA (mg/m^3)
2-Feb-2016	11:04:40	0.004	0.004
2-Feb-2016	11:08:40	0.004	0.004
2-Feb-2016	11:12:40	0.005	0.004
2-Feb-2016	11:16:40	0.004	0.004
2-Feb-2016	11:20:40	0.004	0.005
2-Feb-2016	11:24:40	0.006	0.005
2-Feb-2016	11:28:40	0.006	0.006
2-Feb-2016	11:32:40	0.005	0.006
2-Feb-2016	11:36:40	0.006	0.006
2-Feb-2016	11:40:40	0.006	0.006
2-Feb-2016	11:44:40	0.006	0.006
2-Feb-2016	11:48:40	0.006	0.006
2-Feb-2016	11:52:40	0.005	0.005
2-Feb-2016	11:56:40	0.005	0.006
2-Feb-2016	12:00:40	0.007	0.006
2-Feb-2016	12:04:40	0.006	0.006
2-Feb-2016	12:08:40	0.006	0.006
2-Feb-2016	12:12:40	0.006	0.006
2-Feb-2016	12:16:40	0.006	0.006
2-Feb-2016	12:20:40	0.007	0.006
2-Feb-2016	12:24:40	0.006	0.006
2-Feb-2016	12:28:40	0.006	0.006
2-Feb-2016	12:32:40	0.007	0.007
2-Feb-2016	12:36:40	0.007	0.008
2-Feb-2016	12:40:40	0.009	0.008
2-Feb-2016	12:44:40	0.008	0.008
2-Feb-2016	12:48:40	0.007	0.008
2-Feb-2016	12:52:40	0.010	0.010
2-Feb-2016	12:56:40	0.012	0.021
2-Feb-2016	13:00:40	0.040	0.023
2-Feb-2016	13:04:40	0.018	0.023
2-Feb-2016	13:08:40	0.012	0.013
2-Feb-2016	13:12:40	0.009	0.011
2-Feb-2016	13:16:40	0.011	0.012
2-Feb-2016	13:20:40	0.017	0.014
2-Feb-2016	13:24:40	0.013	0.014
2-Feb-2016	13:28:40	0.013	0.012
2-Feb-2016	13:32:40	0.010	0.022
2-Feb-2016	13:36:40	0.044	0.022
2-Feb-2016	13:40:40	0.013	0.022
2-Feb-2016	13:44:40	0.010	0.011

DUST MONITORING

February 2016

shading indicates values over the threshold

Monitor: 2

Threshold: 0.15 (mg/m^3)

Date	Time	Value (mg/m^3)	TWA (mg/m^3)
2-Feb-2016	13:48:40	0.011	0.010
2-Feb-2016	13:52:40	0.010	0.011
2-Feb-2016	13:56:40	0.011	0.010
2-Feb-2016	14:00:40	0.010	0.010
2-Feb-2016	14:04:40	0.010	0.011
2-Feb-2016	14:08:40	0.012	0.011
2-Feb-2016	14:12:40	0.011	0.011
2-Feb-2016	14:16:40	0.011	0.012
2-Feb-2016	14:20:40	0.013	0.012
2-Feb-2016	14:24:40	0.011	0.021
2-Feb-2016	14:28:40	0.039	0.021
2-Feb-2016	14:32:40	0.014	0.021
2-Feb-2016	14:36:40	0.011	0.012
2-Feb-2016	14:40:40	0.012	0.016
2-Feb-2016	14:44:40	0.024	0.019
2-Feb-2016	14:48:40	0.022	0.038
2-Feb-2016	14:52:40	0.069	0.035
2-Feb-2016	14:56:40	0.014	0.033
2-Feb-2016	15:00:40	0.015	0.017
2-Feb-2016	15:04:40	0.022	0.018
2-Feb-2016	15:08:40	0.018	0.019
2-Feb-2016	15:12:40	0.017	0.019
2-Feb-2016	15:16:40	0.023	0.019
2-Feb-2016	15:20:40	0.018	0.023
2-Feb-2016	15:24:40	0.027	0.020
2-Feb-2016	15:28:40	0.016	0.022
2-Feb-2016	15:32:40	0.024	0.018
2-Feb-2016	15:36:40	0.014	0.019
4-Feb-2016	08:45:17	0.005	0.003
4-Feb-2016	08:49:17	0.001	0.002
4-Feb-2016	08:53:17	0.001	0.001
4-Feb-2016	08:57:17	0.000	0.000
4-Feb-2016	09:01:17	0.000	0.000
4-Feb-2016	09:05:17	0.001	0.000
4-Feb-2016	09:09:17	0.000	0.000
4-Feb-2016	09:13:17	0.000	0.000
4-Feb-2016	09:17:17	0.000	0.001
4-Feb-2016	09:21:17	0.002	0.002
4-Feb-2016	09:25:17	0.003	0.002
4-Feb-2016	09:29:17	0.002	0.002
4-Feb-2016	09:33:17	0.002	0.002

DUST MONITORING

February 2016

shading indicates values over the threshold

Monitor: 2

Threshold: 0.15 (mg/m^3)

Date	Time	Value (mg/m^3)	TWA (mg/m^3)
4-Feb-2016	09:37:17	0.002	0.002
4-Feb-2016	09:41:17	0.003	0.002
4-Feb-2016	09:45:17	0.002	0.002
4-Feb-2016	09:49:17	0.002	0.002
4-Feb-2016	09:53:17	0.002	0.002
4-Feb-2016	09:57:17	0.002	0.002
4-Feb-2016	10:01:17	0.001	0.002
4-Feb-2016	10:05:17	0.002	0.001
4-Feb-2016	10:09:17	0.001	0.002
4-Feb-2016	10:13:17	0.002	0.002
4-Feb-2016	10:17:17	0.002	0.002
4-Feb-2016	10:21:17	0.002	0.002
4-Feb-2016	10:25:17	0.002	0.002
4-Feb-2016	10:29:17	0.003	0.003
4-Feb-2016	10:33:17	0.004	0.004
4-Feb-2016	10:37:17	0.004	0.004
4-Feb-2016	10:41:17	0.005	0.004
4-Feb-2016	10:45:17	0.004	0.004
4-Feb-2016	10:49:17	0.004	0.004
4-Feb-2016	10:53:17	0.003	0.004
4-Feb-2016	10:57:17	0.004	0.004
4-Feb-2016	11:01:17	0.005	0.005
4-Feb-2016	11:05:17	0.005	0.005
4-Feb-2016	11:09:17	0.004	0.005
4-Feb-2016	11:13:17	0.005	0.005
4-Feb-2016	11:17:17	0.006	0.005
4-Feb-2016	11:21:17	0.005	0.006
4-Feb-2016	11:25:17	0.006	0.006
4-Feb-2016	11:29:17	0.006	0.006
4-Feb-2016	11:33:17	0.005	0.006
4-Feb-2016	11:37:17	0.006	0.006
4-Feb-2016	11:41:17	0.006	0.006
4-Feb-2016	11:45:17	0.007	0.006
4-Feb-2016	11:49:17	0.006	0.007
4-Feb-2016	11:53:17	0.007	0.006
4-Feb-2016	11:57:17	0.006	0.007
4-Feb-2016	12:01:17	0.007	0.007
4-Feb-2016	12:05:17	0.007	0.007
4-Feb-2016	12:09:17	0.007	0.007
4-Feb-2016	12:13:17	0.007	0.007
4-Feb-2016	12:17:17	0.007	0.007

DUST MONITORING

February 2016

shading indicates values over the threshold

Monitor: 2

Threshold: 0.15 (mg/m^3)

Date	Time	Value (mg/m^3)	TWA (mg/m^3)
4-Feb-2016	12:21:17	0.007	0.007
4-Feb-2016	12:25:17	0.007	0.007
4-Feb-2016	12:29:17	0.006	0.006
4-Feb-2016	12:33:17	0.006	0.006
4-Feb-2016	12:37:17	0.007	0.007
4-Feb-2016	12:41:17	0.008	0.007
4-Feb-2016	12:45:17	0.007	0.007
4-Feb-2016	12:49:17	0.006	0.006
4-Feb-2016	12:53:17	0.006	0.006
4-Feb-2016	12:57:17	0.007	0.007
4-Feb-2016	13:01:17	0.007	0.008
4-Feb-2016	13:05:17	0.009	0.008
4-Feb-2016	13:09:17	0.009	0.009
4-Feb-2016	13:13:17	0.008	0.011
4-Feb-2016	13:17:17	0.015	0.012
4-Feb-2016	13:21:17	0.014	0.014
4-Feb-2016	13:25:17	0.014	0.014
4-Feb-2016	13:29:17	0.013	0.014
4-Feb-2016	13:33:17	0.014	0.013
4-Feb-2016	13:37:17	0.012	0.013
4-Feb-2016	13:41:17	0.013	0.013
4-Feb-2016	13:45:17	0.013	0.013
4-Feb-2016	13:49:17	0.012	0.012
4-Feb-2016	13:53:17	0.012	0.012
4-Feb-2016	13:57:17	0.013	0.012
4-Feb-2016	14:01:17	0.012	0.012
4-Feb-2016	14:05:17	0.011	0.012
4-Feb-2016	14:09:17	0.014	0.013
4-Feb-2016	14:13:17	0.013	0.013
4-Feb-2016	14:17:17	0.011	0.012
4-Feb-2016	14:21:17	0.011	0.011
4-Feb-2016	14:25:17	0.010	0.010
4-Feb-2016	14:29:17	0.010	0.010
4-Feb-2016	14:33:17	0.010	0.010
4-Feb-2016	14:37:17	0.010	0.010
4-Feb-2016	14:41:17	0.010	0.010
4-Feb-2016	14:45:17	0.010	0.010
4-Feb-2016	14:49:17	0.010	0.010
4-Feb-2016	14:53:17	0.011	0.011
4-Feb-2016	14:57:17	0.012	0.014
4-Feb-2016	15:01:17	0.019	0.014

DUST MONITORING

February 2016

shading indicates values over the threshold

Monitor: 2

Threshold: 0.15 (mg/m^3)

Date	Time	Value (mg/m^3)	TWA (mg/m^3)
4-Feb-2016	15:05:17	0.011	0.014
4-Feb-2016	15:09:17	0.011	0.011
4-Feb-2016	15:13:17	0.010	0.011
4-Feb-2016	15:17:17	0.011	0.010
4-Feb-2016	15:21:17	0.010	0.010
4-Feb-2016	15:25:17	0.010	0.010
4-Feb-2016	15:29:17	0.011	0.011
4-Feb-2016	15:33:17	0.012	0.011
4-Feb-2016	15:37:17	0.010	0.011
4-Feb-2016	15:41:17	0.011	0.011
4-Feb-2016	15:45:17	0.011	0.011
4-Feb-2016	15:49:17	0.011	0.012
4-Feb-2016	15:53:17	0.013	0.012
4-Feb-2016	15:57:17	0.013	0.013
4-Feb-2016	16:01:17	0.012	0.013
5-Feb-2016	08:31:33	0.028	0.027
5-Feb-2016	08:35:33	0.025	0.026
5-Feb-2016	08:39:33	0.024	0.022
5-Feb-2016	08:43:33	0.018	0.021
5-Feb-2016	08:47:33	0.022	0.021
5-Feb-2016	08:51:33	0.024	0.023
5-Feb-2016	08:55:33	0.024	0.022
5-Feb-2016	08:59:33	0.017	0.020
5-Feb-2016	09:03:33	0.018	0.018
5-Feb-2016	09:07:33	0.020	0.024
5-Feb-2016	09:11:33	0.033	0.047
5-Feb-2016	09:15:33	0.088	0.059
5-Feb-2016	12:56:31	0.055	0.064
5-Feb-2016	13:00:31	0.049	0.048
5-Feb-2016	13:04:31	0.041	0.048
5-Feb-2016	13:08:31	0.053	0.045
5-Feb-2016	13:12:31	0.041	0.044
5-Feb-2016	13:16:31	0.039	0.077
5-Feb-2016	13:20:31	0.152	0.106
5-Feb-2016	13:24:31	0.127	0.140
8-Feb-2016	09:44:18	0.068	0.060
8-Feb-2016	09:48:18	0.051	0.059
8-Feb-2016	09:52:18	0.058	0.062
8-Feb-2016	09:56:18	0.076	0.061
8-Feb-2016	10:00:18	0.048	0.058
8-Feb-2016	10:04:18	0.051	0.049

DUST MONITORING

February 2016

shading indicates values over the threshold

Monitor: 2

Threshold: 0.15 (mg/m^3)

Date	Time	Value (mg/m^3)	TWA (mg/m^3)
8-Feb-2016	10:08:18	0.048	0.068
8-Feb-2016	10:12:18	0.106	0.076
8-Feb-2016	10:16:18	0.073	0.077
8-Feb-2016	10:20:18	0.053	0.058
8-Feb-2016	10:24:18	0.048	0.050
8-Feb-2016	10:28:18	0.049	0.048
8-Feb-2016	10:32:18	0.048	0.048
8-Feb-2016	10:36:18	0.048	0.048
8-Feb-2016	10:40:18	0.049	0.059
8-Feb-2016	10:44:18	0.079	0.062
8-Feb-2016	10:48:18	0.059	0.063
8-Feb-2016	10:52:18	0.052	0.054
8-Feb-2016	10:56:18	0.052	0.053
8-Feb-2016	11:00:18	0.055	0.052
8-Feb-2016	11:04:18	0.048	0.050
8-Feb-2016	11:08:18	0.046	0.047
8-Feb-2016	11:12:18	0.047	0.046
8-Feb-2016	11:16:18	0.045	0.048
8-Feb-2016	11:20:18	0.053	0.048
8-Feb-2016	11:24:18	0.045	0.049
8-Feb-2016	11:28:18	0.049	0.047
9-Feb-2016	10:10:00	0.047	0.046
9-Feb-2016	10:14:00	0.044	0.046
9-Feb-2016	10:18:00	0.048	0.045
9-Feb-2016	10:22:00	0.044	0.045
9-Feb-2016	10:26:00	0.044	0.045
9-Feb-2016	10:30:00	0.046	0.044
9-Feb-2016	10:34:00	0.043	0.044
9-Feb-2016	10:38:00	0.043	0.043
9-Feb-2016	10:42:00	0.042	0.043
9-Feb-2016	10:46:00	0.044	0.044
9-Feb-2016	10:50:00	0.046	0.045
9-Feb-2016	10:54:00	0.046	0.044
9-Feb-2016	10:58:00	0.041	0.043
9-Feb-2016	11:02:00	0.041	0.041
9-Feb-2016	11:06:00	0.041	0.042
9-Feb-2016	11:10:00	0.044	0.042
9-Feb-2016	11:14:00	0.042	0.042
9-Feb-2016	11:18:00	0.041	0.043
9-Feb-2016	11:22:00	0.047	0.043
9-Feb-2016	11:26:00	0.041	0.043

DUST MONITORING

February 2016

shading indicates values over the threshold

Monitor: 2

Threshold: 0.15 (mg/m^3)

Date	Time	Value (mg/m^3)	TWA (mg/m^3)
9-Feb-2016	11:30:00	0.042	0.041
9-Feb-2016	11:34:00	0.041	0.041
9-Feb-2016	11:38:00	0.041	0.041
9-Feb-2016	11:42:00	0.041	0.038
9-Feb-2016	13:23:02	0.031	0.035
9-Feb-2016	13:27:02	0.032	0.032
9-Feb-2016	13:31:02	0.032	0.031
9-Feb-2016	13:35:02	0.029	0.030
9-Feb-2016	13:39:02	0.029	0.029
9-Feb-2016	13:43:02	0.030	0.030
9-Feb-2016	13:47:02	0.030	0.030
9-Feb-2016	13:51:02	0.031	0.031
9-Feb-2016	13:55:02	0.031	0.031
9-Feb-2016	13:59:02	0.030	0.031
9-Feb-2016	14:03:02	0.032	0.031
9-Feb-2016	14:07:02	0.031	0.031
9-Feb-2016	14:11:02	0.031	0.031
9-Feb-2016	14:15:02	0.031	0.031
9-Feb-2016	14:19:02	0.031	0.031
9-Feb-2016	14:23:02	0.031	0.031
9-Feb-2016	14:27:02	0.031	0.031
9-Feb-2016	14:31:02	0.031	0.031
9-Feb-2016	14:35:02	0.031	0.031
9-Feb-2016	14:39:02	0.031	0.031
9-Feb-2016	14:43:02	0.031	0.031
9-Feb-2016	14:47:02	0.031	0.031
9-Feb-2016	14:51:02	0.032	0.032
9-Feb-2016	14:55:02	0.032	0.032
9-Feb-2016	14:59:02	0.032	0.032
9-Feb-2016	15:03:02	0.033	0.032
9-Feb-2016	15:07:02	0.032	0.032
9-Feb-2016	15:11:02	0.032	0.032
9-Feb-2016	15:15:02	0.033	0.033
9-Feb-2016	15:19:02	0.033	0.033
9-Feb-2016	15:23:02	0.033	0.033
9-Feb-2016	15:27:02	0.033	0.033
9-Feb-2016	15:31:02	0.033	0.033
9-Feb-2016	15:35:02	0.032	0.032
9-Feb-2016	15:39:02	0.032	0.032
9-Feb-2016	15:43:02	0.032	0.032
9-Feb-2016	15:47:02	0.032	0.032

DUST MONITORING

February 2016

shading indicates values over the threshold

Monitor: 2

Threshold: 0.15 (mg/m^3)

Date	Time	Value (mg/m^3)	TWA (mg/m^3)
9-Feb-2016	15:51:02	0.032	0.032
9-Feb-2016	15:55:02	0.032	0.032
9-Feb-2016	15:59:02	0.033	0.033
9-Feb-2016	16:03:02	0.033	0.033
9-Feb-2016	16:07:02	0.034	0.034
9-Feb-2016	16:11:02	0.034	0.034
9-Feb-2016	16:15:02	0.034	0.034
9-Feb-2016	16:19:02	0.035	0.034
9-Feb-2016	16:23:02	0.034	0.034
9-Feb-2016	16:27:02	0.034	0.034
9-Feb-2016	16:31:02	0.035	0.035
9-Feb-2016	16:35:02	0.035	0.035
9-Feb-2016	16:39:02	0.036	0.035
9-Feb-2016	16:43:02	0.034	0.035
9-Feb-2016	16:47:02	0.034	0.035
9-Feb-2016	16:51:02	0.036	0.035
9-Feb-2016	16:55:02	0.036	0.036
10-Feb-2016	08:28:47	0.060	0.060
10-Feb-2016	08:32:47	0.060	0.061
10-Feb-2016	08:36:47	0.063	0.061
10-Feb-2016	08:40:47	0.061	0.061
10-Feb-2016	08:44:47	0.059	0.061
10-Feb-2016	08:48:47	0.062	0.061
10-Feb-2016	08:52:47	0.063	0.061
10-Feb-2016	08:56:47	0.059	0.060
10-Feb-2016	09:00:47	0.059	0.059
10-Feb-2016	09:04:47	0.059	0.059
10-Feb-2016	09:08:47	0.059	0.059
10-Feb-2016	09:12:47	0.059	0.062
10-Feb-2016	09:16:47	0.068	0.062
10-Feb-2016	09:20:47	0.059	0.062
10-Feb-2016	09:24:47	0.059	0.060
10-Feb-2016	09:28:47	0.061	0.060
10-Feb-2016	09:32:47	0.061	0.060
10-Feb-2016	09:36:47	0.058	0.060
10-Feb-2016	09:40:47	0.061	0.061
10-Feb-2016	09:44:47	0.063	0.062
10-Feb-2016	09:48:47	0.063	0.062
10-Feb-2016	09:52:47	0.061	0.061
10-Feb-2016	09:56:47	0.058	0.058
10-Feb-2016	10:00:47	0.056	0.058

DUST MONITORING

February 2016

shading indicates values over the threshold

Monitor: 2

Threshold: 0.15 (mg/m^3)

Date	Time	Value (mg/m^3)	TWA (mg/m^3)
10-Feb-2016	10:04:47	0.061	0.059
10-Feb-2016	10:08:47	0.059	0.060
10-Feb-2016	10:12:47	0.059	0.058
10-Feb-2016	10:16:47	0.056	0.056
10-Feb-2016	10:20:47	0.054	0.056
10-Feb-2016	10:24:47	0.059	0.056
10-Feb-2016	10:28:47	0.055	0.056
10-Feb-2016	10:32:47	0.054	0.056
10-Feb-2016	10:36:47	0.059	0.058
10-Feb-2016	10:40:47	0.062	0.061
10-Feb-2016	10:44:47	0.061	0.061
10-Feb-2016	10:48:47	0.059	0.059
10-Feb-2016	10:52:47	0.056	0.058
10-Feb-2016	10:56:47	0.058	0.056
10-Feb-2016	11:00:47	0.054	0.055
10-Feb-2016	11:04:47	0.053	0.056
10-Feb-2016	11:08:47	0.060	0.061
10-Feb-2016	11:12:47	0.069	0.061
10-Feb-2016	11:16:47	0.053	0.061
10-Feb-2016	11:20:47	0.062	0.058
11-Feb-2016	09:44:40	0.076	0.077
11-Feb-2016	09:48:40	0.077	0.079
11-Feb-2016	09:52:40	0.085	0.078
11-Feb-2016	09:56:40	0.071	0.098
11-Feb-2016	10:00:40	0.138	0.111
11-Feb-2016	10:04:40	0.125	0.129
11-Feb-2016	10:08:40	0.124	0.124
11-Feb-2016	10:12:40	0.122	0.111
11-Feb-2016	10:16:40	0.087	0.096
11-Feb-2016	10:20:40	0.079	0.078
11-Feb-2016	10:24:40	0.069	0.077
11-Feb-2016	10:28:40	0.084	0.075
11-Feb-2016	10:32:40	0.072	0.127
11-Feb-2016	10:36:40	0.224	0.134
11-Feb-2016	10:40:40	0.105	0.148
11-Feb-2016	10:44:40	0.116	0.100
11-Feb-2016	10:48:40	0.079	0.122
11-Feb-2016	10:52:40	0.170	0.514
11-Feb-2016	10:56:40	1.292	0.523
11-Feb-2016	11:00:40	0.106	0.499
11-Feb-2016	11:04:40	0.099	0.096

DUST MONITORING

February 2016

shading indicates values over the threshold

Monitor: 2

Threshold: 0.15 (mg/m^3)

Date	Time	Value (mg/m^3)	TWA (mg/m^3)
11-Feb-2016	11:08:40	0.083	0.090
11-Feb-2016	11:12:40	0.088	0.084
11-Feb-2016	11:16:40	0.081	0.117
11-Feb-2016	11:20:40	0.183	0.118
11-Feb-2016	11:24:40	0.090	0.117
11-Feb-2016	11:28:40	0.079	0.092
11-Feb-2016	11:32:40	0.106	0.113
11-Feb-2016	11:36:40	0.154	0.138
11-Feb-2016	11:40:40	0.155	0.144
11-Feb-2016	11:44:40	0.123	0.127
11-Feb-2016	11:48:40	0.103	0.104
11-Feb-2016	11:52:40	0.087	0.091
11-Feb-2016	11:56:40	0.082	0.082
11-Feb-2016	12:00:40	0.077	0.080
11-Feb-2016	12:04:40	0.082	0.079
11-Feb-2016	12:08:40	0.078	0.081
11-Feb-2016	12:12:40	0.084	0.082
11-Feb-2016	12:16:40	0.083	0.083
11-Feb-2016	12:20:40	0.082	0.083
11-Feb-2016	12:24:40	0.085	0.083
11-Feb-2016	12:28:40	0.082	0.084
11-Feb-2016	12:32:40	0.084	0.083
11-Feb-2016	12:36:40	0.084	0.088
11-Feb-2016	12:40:40	0.096	0.090
12-Feb-2016	08:52:32	0.121	0.098
12-Feb-2016	08:56:32	0.075	0.118
12-Feb-2016	09:00:32	0.159	0.123
12-Feb-2016	09:04:32	0.134	0.126
12-Feb-2016	09:08:32	0.084	0.099
12-Feb-2016	09:12:32	0.079	0.077
12-Feb-2016	09:16:32	0.068	0.080
12-Feb-2016	09:20:32	0.094	0.077
12-Feb-2016	09:24:32	0.069	0.077
12-Feb-2016	09:28:32	0.069	0.069
12-Feb-2016	09:32:32	0.068	0.069
12-Feb-2016	09:36:32	0.071	0.069
12-Feb-2016	09:40:32	0.069	0.069
12-Feb-2016	09:44:32	0.067	0.068
12-Feb-2016	09:48:32	0.068	0.068
12-Feb-2016	09:52:32	0.068	0.068
12-Feb-2016	09:56:32	0.067	0.067

DUST MONITORING

February 2016

shading indicates values over the threshold

Monitor: 2

Threshold: 0.15 (mg/m^3)

Date	Time	Value (mg/m^3)	TWA (mg/m^3)
12-Feb-2016	10:00:32	0.065	0.065
12-Feb-2016	10:04:32	0.064	0.064
12-Feb-2016	10:08:32	0.063	0.064
12-Feb-2016	10:12:32	0.065	0.064
12-Feb-2016	10:16:32	0.063	0.064
12-Feb-2016	10:20:32	0.063	0.063
12-Feb-2016	10:24:32	0.063	0.063
12-Feb-2016	10:28:32	0.062	0.063
12-Feb-2016	10:32:32	0.063	0.065
12-Feb-2016	10:36:32	0.071	0.066
12-Feb-2016	10:40:32	0.064	0.069
12-Feb-2016	10:44:32	0.071	0.068
12-Feb-2016	10:48:32	0.070	0.069
12-Feb-2016	10:52:32	0.065	0.068
12-Feb-2016	10:56:32	0.068	0.066
12-Feb-2016	11:00:32	0.066	0.067
12-Feb-2016	11:04:32	0.067	0.067
12-Feb-2016	11:08:32	0.067	0.068
12-Feb-2016	11:12:32	0.069	0.068
12-Feb-2016	11:16:32	0.069	0.069
12-Feb-2016	11:20:32	0.070	0.070
12-Feb-2016	11:24:32	0.070	0.071
12-Feb-2016	11:28:32	0.072	0.072
12-Feb-2016	11:32:32	0.075	0.075
12-Feb-2016	11:36:32	0.078	0.076
12-Feb-2016	11:40:32	0.074	0.075
12-Feb-2016	11:44:32	0.072	0.074
12-Feb-2016	11:48:32	0.076	0.074
12-Feb-2016	11:52:32	0.074	0.076
12-Feb-2016	11:56:32	0.077	0.079
12-Feb-2016	12:00:32	0.086	0.079
12-Feb-2016	12:04:32	0.073	0.077
12-Feb-2016	12:08:32	0.073	0.073
12-Feb-2016	12:12:32	0.074	0.074
12-Feb-2016	12:16:32	0.074	0.074
12-Feb-2016	12:20:32	0.074	0.074
12-Feb-2016	12:24:32	0.074	0.074
12-Feb-2016	12:28:32	0.074	0.074
12-Feb-2016	12:32:32	0.075	0.075
12-Feb-2016	12:36:32	0.075	0.075
12-Feb-2016	12:40:32	0.075	0.075

DUST MONITORING

February 2016

shading indicates values over the threshold

Monitor: 2

Threshold: 0.15 (mg/m^3)

Date	Time	Value (mg/m^3)	TWA (mg/m^3)
12-Feb-2016	12:44:32	0.076	0.076
12-Feb-2016	12:48:32	0.078	0.077
12-Feb-2016	12:52:32	0.077	0.078
12-Feb-2016	12:56:32	0.080	0.078
12-Feb-2016	13:00:32	0.077	0.078
12-Feb-2016	13:04:32	0.078	0.077
12-Feb-2016	13:08:32	0.075	0.078
12-Feb-2016	13:12:32	0.080	0.080
12-Feb-2016	13:16:32	0.084	0.079
12-Feb-2016	13:20:32	0.074	0.077
12-Feb-2016	13:24:32	0.074	0.074
12-Feb-2016	13:28:32	0.075	0.075
12-Feb-2016	13:32:32	0.075	0.075
12-Feb-2016	13:36:32	0.076	0.075
12-Feb-2016	13:40:32	0.074	0.075
12-Feb-2016	13:44:32	0.074	0.074
12-Feb-2016	13:48:32	0.075	0.074
12-Feb-2016	13:52:32	0.074	0.075
12-Feb-2016	13:56:32	0.076	0.075
12-Feb-2016	14:00:32	0.074	0.075
12-Feb-2016	14:04:32	0.075	0.075
12-Feb-2016	14:08:32	0.076	0.075
12-Feb-2016	14:12:32	0.075	0.075
12-Feb-2016	14:16:32	0.075	0.075
12-Feb-2016	14:20:32	0.076	0.076
12-Feb-2016	14:24:32	0.077	0.076
12-Feb-2016	14:28:32	0.076	0.076
12-Feb-2016	14:32:32	0.074	0.075
12-Feb-2016	14:36:32	0.074	0.075
12-Feb-2016	14:40:32	0.076	0.078
12-Feb-2016	14:44:32	0.083	0.078
12-Feb-2016	14:48:32	0.076	0.077
12-Feb-2016	14:52:32	0.073	0.075
12-Feb-2016	14:56:32	0.075	0.074
12-Feb-2016	15:00:32	0.074	0.074
12-Feb-2016	15:04:32	0.074	0.074
12-Feb-2016	15:08:32	0.073	0.074
12-Feb-2016	15:12:32	0.075	0.074
12-Feb-2016	15:16:32	0.073	0.074
12-Feb-2016	15:20:32	0.073	0.073
12-Feb-2016	15:24:32	0.074	0.074

DUST MONITORING

February 2016

shading indicates values over the threshold

Monitor: 2

Threshold: 0.15 (mg/m^3)

Date	Time	Value (mg/m^3)	TWA (mg/m^3)
17-Feb-2016	10:11:49	0.076	0.070
17-Feb-2016	10:15:49	0.064	0.067
17-Feb-2016	10:19:49	0.061	0.062
17-Feb-2016	10:23:49	0.061	0.063
17-Feb-2016	10:27:49	0.066	0.065
17-Feb-2016	10:31:49	0.068	0.070
17-Feb-2016	10:35:49	0.076	0.070
17-Feb-2016	10:39:49	0.065	0.068
17-Feb-2016	10:43:49	0.062	0.063
17-Feb-2016	10:47:49	0.062	0.062
17-Feb-2016	10:51:49	0.061	0.062
17-Feb-2016	10:55:49	0.062	0.062
17-Feb-2016	10:59:49	0.063	0.063
17-Feb-2016	11:03:49	0.064	0.063
17-Feb-2016	11:07:49	0.061	0.062
17-Feb-2016	11:11:49	0.061	0.062
17-Feb-2016	11:15:49	0.063	0.062
17-Feb-2016	11:19:49	0.063	0.063
17-Feb-2016	11:23:49	0.064	0.063
17-Feb-2016	11:27:49	0.061	0.062
17-Feb-2016	11:31:49	0.060	0.060
17-Feb-2016	11:35:49	0.060	0.061
17-Feb-2016	11:39:49	0.062	0.061
17-Feb-2016	11:43:49	0.061	0.061
17-Feb-2016	11:47:49	0.061	0.061
17-Feb-2016	11:51:49	0.060	0.060
17-Feb-2016	11:55:49	0.060	0.060
17-Feb-2016	11:59:49	0.060	0.060
17-Feb-2016	12:03:49	0.061	0.061
17-Feb-2016	12:07:49	0.061	0.060
17-Feb-2016	12:11:49	0.059	0.060
17-Feb-2016	12:15:49	0.061	0.061
17-Feb-2016	12:19:49	0.062	0.061
17-Feb-2016	12:23:49	0.060	0.061
17-Feb-2016	12:27:49	0.061	0.060
17-Feb-2016	12:31:49	0.060	0.061
17-Feb-2016	12:35:49	0.061	0.061
17-Feb-2016	12:39:49	0.061	0.061
17-Feb-2016	12:43:49	0.060	0.060
17-Feb-2016	12:47:49	0.060	0.060
17-Feb-2016	12:51:49	0.060	0.060

DUST MONITORING

February 2016

shading indicates values over the threshold

Monitor: 2

Threshold: 0.15 (mg/m^3)

Date	Time	Value (mg/m^3)	TWA (mg/m^3)
17-Feb-2016	12:55:49	0.060	0.060
17-Feb-2016	12:59:49	0.059	0.060
17-Feb-2016	13:03:49	0.061	0.060
17-Feb-2016	13:07:49	0.060	0.060
17-Feb-2016	13:11:49	0.060	0.060
17-Feb-2016	13:15:49	0.061	0.061
17-Feb-2016	13:19:49	0.062	0.062
17-Feb-2016	13:23:49	0.062	0.104
17-Feb-2016	13:27:49	0.187	0.101
17-Feb-2016	13:31:49	0.054	0.098
17-Feb-2016	13:35:49	0.052	0.053
17-Feb-2016	13:39:49	0.052	0.053
17-Feb-2016	13:43:49	0.054	0.053
17-Feb-2016	13:47:49	0.052	0.053
17-Feb-2016	13:51:49	0.053	0.052
17-Feb-2016	13:55:49	0.052	0.053
17-Feb-2016	13:59:49	0.053	0.053
17-Feb-2016	14:03:49	0.053	0.053
17-Feb-2016	14:07:49	0.053	0.053
17-Feb-2016	14:11:49	0.053	0.054
17-Feb-2016	14:15:49	0.055	0.054
17-Feb-2016	14:19:49	0.055	0.056
17-Feb-2016	14:23:49	0.057	0.057
17-Feb-2016	14:27:49	0.058	0.058
17-Feb-2016	14:31:49	0.060	0.059
17-Feb-2016	14:35:49	0.060	0.061
17-Feb-2016	14:39:49	0.063	0.063
17-Feb-2016	14:43:49	0.065	0.064
17-Feb-2016	14:47:49	0.064	0.065
17-Feb-2016	14:51:49	0.067	0.066
17-Feb-2016	14:55:49	0.068	0.070
17-Feb-2016	14:59:49	0.075	0.074
17-Feb-2016	15:03:49	0.079	0.078
17-Feb-2016	15:07:49	0.080	0.081
17-Feb-2016	15:11:49	0.084	0.081
17-Feb-2016	15:15:49	0.079	0.080
17-Feb-2016	15:19:49	0.078	0.078
17-Feb-2016	15:23:49	0.078	0.078
17-Feb-2016	15:27:49	0.078	0.078
17-Feb-2016	15:31:49	0.079	0.080
17-Feb-2016	15:35:49	0.084	0.084

DUST MONITORING

February 2016

shading indicates values over the threshold

Monitor: 2

Threshold: 0.15 (mg/m^3)

Date	Time	Value (mg/m^3)	TWA (mg/m^3)
17-Feb-2016	15:39:49	0.089	0.084
17-Feb-2016	15:43:49	0.080	0.083
17-Feb-2016	15:47:49	0.080	0.080
17-Feb-2016	15:51:49	0.079	0.079
17-Feb-2016	15:55:49	0.078	0.079
17-Feb-2016	15:59:49	0.079	0.079
18-Feb-2016	09:56:08	0.081	0.077
18-Feb-2016	10:00:08	0.073	0.077
18-Feb-2016	10:04:08	0.076	0.087
18-Feb-2016	10:08:08	0.112	0.088
18-Feb-2016	10:12:08	0.077	0.095
19-Feb-2016	12:26:39	0.054	0.052
19-Feb-2016	12:30:39	0.049	0.050
19-Feb-2016	12:34:39	0.047	0.048
19-Feb-2016	12:38:39	0.047	0.047
19-Feb-2016	12:42:39	0.047	0.048
19-Feb-2016	12:46:39	0.050	0.049
19-Feb-2016	12:50:39	0.049	0.048
19-Feb-2016	12:54:39	0.046	0.046
19-Feb-2016	12:58:39	0.044	0.045
19-Feb-2016	13:02:39	0.045	0.045
19-Feb-2016	13:06:39	0.045	0.045
19-Feb-2016	13:10:39	0.046	0.046
19-Feb-2016	13:14:39	0.046	0.046
19-Feb-2016	13:18:39	0.045	0.045
19-Feb-2016	13:22:39	0.045	0.045
19-Feb-2016	13:26:39	0.045	0.045
19-Feb-2016	13:30:39	0.045	0.045
19-Feb-2016	13:34:39	0.045	0.045
19-Feb-2016	13:38:39	0.045	0.045
19-Feb-2016	13:42:39	0.046	0.045
19-Feb-2016	13:46:39	0.045	0.045
19-Feb-2016	13:50:39	0.045	0.045
19-Feb-2016	13:54:39	0.044	0.045
19-Feb-2016	13:58:39	0.045	0.045
19-Feb-2016	14:02:39	0.045	0.045
19-Feb-2016	14:06:39	0.045	0.046
19-Feb-2016	14:10:39	0.048	0.046
19-Feb-2016	14:14:39	0.045	0.046
19-Feb-2016	14:18:39	0.045	0.045
19-Feb-2016	14:22:39	0.044	0.045

DUST MONITORING

February 2016

shading indicates values over the threshold

Monitor: 2

Threshold: 0.15 (mg/m^3)

Date	Time	Value (mg/m^3)	TWA (mg/m^3)
19-Feb-2016	14:26:39	0.045	0.045
19-Feb-2016	14:30:39	0.045	0.045
19-Feb-2016	14:34:39	0.046	0.045
19-Feb-2016	14:38:39	0.045	0.045
19-Feb-2016	14:42:39	0.044	0.045
19-Feb-2016	14:46:39	0.045	0.045
19-Feb-2016	14:50:39	0.047	0.046
19-Feb-2016	14:54:39	0.047	0.047
19-Feb-2016	14:58:39	0.046	0.046
19-Feb-2016	15:02:39	0.046	0.047
19-Feb-2016	15:06:39	0.048	0.047
19-Feb-2016	15:10:39	0.047	0.048
19-Feb-2016	15:14:39	0.049	0.048
19-Feb-2016	15:18:39	0.047	0.048
19-Feb-2016	15:22:39	0.048	0.048
19-Feb-2016	15:26:39	0.048	0.048
19-Feb-2016	15:30:39	0.048	0.050
19-Feb-2016	15:34:39	0.053	0.051
19-Feb-2016	15:38:39	0.051	0.051
19-Feb-2016	15:42:39	0.049	0.050
19-Feb-2016	15:46:39	0.050	0.050
19-Feb-2016	15:50:39	0.050	0.050
19-Feb-2016	15:54:39	0.049	0.049
19-Feb-2016	15:58:39	0.048	0.049
19-Feb-2016	16:02:39	0.049	0.048
19-Feb-2016	16:06:39	0.048	0.048
19-Feb-2016	16:10:39	0.048	0.048
19-Feb-2016	16:14:39	0.047	0.049
19-Feb-2016	16:18:39	0.051	0.049
19-Feb-2016	16:22:39	0.049	0.050
19-Feb-2016	16:26:39	0.050	0.049
19-Feb-2016	16:30:39	0.049	0.049
19-Feb-2016	16:34:39	0.048	0.048
19-Feb-2016	16:38:39	0.047	0.048
25-Feb-2016	08:15:37	0.042	0.042
25-Feb-2016	08:19:37	0.042	0.043
25-Feb-2016	08:23:37	0.045	0.044
25-Feb-2016	08:27:37	0.044	0.045
25-Feb-2016	08:31:37	0.045	0.044
25-Feb-2016	08:35:37	0.044	0.044
25-Feb-2016	08:39:37	0.044	0.045

DUST MONITORING

February 2016

shading indicates values over the threshold

Monitor: 2

Threshold: 0.15 (mg/m^3)

Date	Time	Value (mg/m^3)	TWA (mg/m^3)
25-Feb-2016	08:43:37	0.046	0.046
25-Feb-2016	08:47:37	0.048	0.047
25-Feb-2016	08:51:37	0.048	0.047
25-Feb-2016	08:55:37	0.045	0.046
25-Feb-2016	08:59:37	0.044	0.045
25-Feb-2016	09:03:37	0.045	0.045
25-Feb-2016	09:07:37	0.045	0.045
25-Feb-2016	09:11:37	0.045	0.046
25-Feb-2016	09:15:37	0.047	0.045
25-Feb-2016	09:19:37	0.043	0.046
25-Feb-2016	09:23:37	0.048	0.046
25-Feb-2016	09:27:37	0.047	0.047
25-Feb-2016	09:31:37	0.047	0.048
25-Feb-2016	09:35:37	0.049	0.048
25-Feb-2016	09:39:37	0.048	0.049
25-Feb-2016	09:43:37	0.049	0.049
25-Feb-2016	09:47:37	0.050	0.049
25-Feb-2016	09:51:37	0.047	0.048
25-Feb-2016	09:55:37	0.048	0.047
25-Feb-2016	09:59:37	0.047	0.048
25-Feb-2016	10:03:37	0.049	0.048
25-Feb-2016	10:07:37	0.047	0.048
25-Feb-2016	10:11:37	0.048	0.048
25-Feb-2016	10:15:37	0.049	0.048
25-Feb-2016	10:19:37	0.048	0.049
25-Feb-2016	10:23:37	0.049	0.048
25-Feb-2016	10:27:37	0.048	0.048
25-Feb-2016	10:31:37	0.047	0.048
25-Feb-2016	10:35:37	0.050	0.048
25-Feb-2016	10:39:37	0.048	0.048
25-Feb-2016	10:43:37	0.047	0.048
25-Feb-2016	10:47:37	0.048	0.048
25-Feb-2016	10:51:37	0.048	0.048
25-Feb-2016	10:55:37	0.047	0.047
25-Feb-2016	10:59:37	0.047	0.047
25-Feb-2016	11:03:37	0.046	0.046
25-Feb-2016	11:07:37	0.046	0.046
25-Feb-2016	11:11:37	0.045	0.046
25-Feb-2016	11:15:37	0.048	0.047
25-Feb-2016	11:19:37	0.048	0.048
25-Feb-2016	11:23:37	0.048	0.048

DUST MONITORING

February 2016

shading indicates values over the threshold

Monitor: 2

Threshold: 0.15 (mg/m^3)

Date	Time	Value (mg/m^3)	TWA (mg/m^3)
25-Feb-2016	11:27:37	0.048	0.049
25-Feb-2016	11:31:37	0.051	0.049
25-Feb-2016	11:35:37	0.047	0.050
25-Feb-2016	11:39:37	0.052	0.047
25-Feb-2016	11:43:37	0.043	0.047
25-Feb-2016	11:47:37	0.045	0.045
25-Feb-2016	11:51:37	0.046	0.045
25-Feb-2016	11:55:37	0.045	0.046
25-Feb-2016	11:59:37	0.048	0.046
25-Feb-2016	12:03:37	0.044	0.047
25-Feb-2016	12:07:37	0.048	0.047
25-Feb-2016	12:11:37	0.049	0.048
25-Feb-2016	12:15:37	0.046	0.047
25-Feb-2016	12:19:37	0.045	0.046
25-Feb-2016	12:23:37	0.048	0.046
25-Feb-2016	12:27:37	0.044	0.047
25-Feb-2016	12:31:37	0.048	0.046
25-Feb-2016	12:35:37	0.046	0.046
25-Feb-2016	12:39:37	0.044	0.044
25-Feb-2016	12:43:37	0.042	0.044
25-Feb-2016	12:47:37	0.046	0.045
25-Feb-2016	12:51:37	0.046	0.046
25-Feb-2016	12:55:37	0.045	0.045
25-Feb-2016	12:59:37	0.043	0.044
25-Feb-2016	13:03:37	0.043	0.043
25-Feb-2016	13:07:37	0.044	0.044
25-Feb-2016	13:11:37	0.045	0.045
25-Feb-2016	13:15:37	0.046	0.046
25-Feb-2016	13:19:37	0.048	0.046
25-Feb-2016	13:23:37	0.044	0.046
25-Feb-2016	13:27:37	0.045	0.044
25-Feb-2016	13:31:37	0.043	0.044
25-Feb-2016	13:35:37	0.044	0.045
25-Feb-2016	13:39:37	0.048	0.046
25-Feb-2016	13:43:37	0.047	0.046
25-Feb-2016	13:47:37	0.043	0.044
25-Feb-2016	13:51:37	0.043	0.043
25-Feb-2016	13:55:37	0.042	0.043
25-Feb-2016	13:59:37	0.044	0.043
25-Feb-2016	14:03:37	0.044	0.043
25-Feb-2016	14:07:37	0.042	0.044

DUST MONITORING

February 2016

shading indicates values over the threshold

Monitor: 2

Threshold: 0.15 (mg/m^3)

Date	Time	Value (mg/m^3)	TWA (mg/m^3)
25-Feb-2016	14:11:37	0.045	0.043
25-Feb-2016	14:15:37	0.043	0.044
25-Feb-2016	14:19:37	0.043	0.043
25-Feb-2016	14:23:37	0.044	0.043
25-Feb-2016	14:27:37	0.042	0.043
25-Feb-2016	14:31:37	0.043	0.042
25-Feb-2016	14:35:37	0.041	0.041
25-Feb-2016	14:39:37	0.039	0.040
25-Feb-2016	14:43:37	0.040	0.039
25-Feb-2016	14:47:37	0.039	0.039
25-Feb-2016	14:51:37	0.039	0.039
25-Feb-2016	14:55:37	0.039	0.039
25-Feb-2016	14:59:37	0.039	0.039
25-Feb-2016	15:03:37	0.038	0.038
25-Feb-2016	15:07:37	0.038	0.038
25-Feb-2016	15:11:37	0.038	0.038
25-Feb-2016	15:15:37	0.038	0.038
25-Feb-2016	15:19:37	0.038	0.038
25-Feb-2016	15:23:37	0.038	0.038
25-Feb-2016	15:27:37	0.038	0.038
25-Feb-2016	15:31:37	0.038	0.038
25-Feb-2016	15:35:37	0.039	0.038
25-Feb-2016	15:39:37	0.038	0.039
25-Feb-2016	15:43:37	0.039	0.038
25-Feb-2016	15:47:37	0.038	0.038
25-Feb-2016	15:51:37	0.038	0.039
25-Feb-2016	15:55:37	0.040	0.039
25-Feb-2016	15:59:37	0.039	0.039
25-Feb-2016	16:03:37	0.038	0.038
25-Feb-2016	16:07:37	0.038	0.039
25-Feb-2016	16:11:37	0.041	0.040
25-Feb-2016	16:15:37	0.040	0.041
29-Feb-2016	09:44:54	0.062	0.060
29-Feb-2016	09:48:54	0.058	0.059
29-Feb-2016	09:52:54	0.058	0.059
29-Feb-2016	09:56:54	0.060	0.059
29-Feb-2016	10:00:54	0.058	0.059
29-Feb-2016	10:04:54	0.059	0.058
29-Feb-2016	10:08:54	0.058	0.059
29-Feb-2016	10:12:54	0.059	0.058
29-Feb-2016	10:16:54	0.058	0.058

DUST MONITORING

February 2016

shading indicates values over the threshold

Monitor: 2

Threshold: 0.15 (mg/m^3)

Date	Time	Value (mg/m^3)	TWA (mg/m^3)
29-Feb-2016	10:20:54	0.056	0.057
29-Feb-2016	10:24:54	0.056	0.056
29-Feb-2016	10:28:54	0.056	0.057
29-Feb-2016	10:32:54	0.058	0.057
29-Feb-2016	10:36:54	0.057	0.056
29-Feb-2016	10:40:54	0.054	0.055
29-Feb-2016	10:44:54	0.054	0.056
29-Feb-2016	10:48:54	0.059	0.057
29-Feb-2016	10:52:54	0.059	0.058
29-Feb-2016	10:56:54	0.056	0.058
29-Feb-2016	11:00:54	0.058	0.060
29-Feb-2016	11:04:54	0.065	0.062
29-Feb-2016	11:08:54	0.064	0.063
29-Feb-2016	11:12:54	0.060	0.062
29-Feb-2016	11:16:54	0.063	0.062
29-Feb-2016	11:20:54	0.062	0.062
29-Feb-2016	11:24:54	0.062	0.062
29-Feb-2016	11:28:54	0.062	0.062
29-Feb-2016	11:32:54	0.063	0.062
29-Feb-2016	11:36:54	0.062	0.062
29-Feb-2016	11:40:54	0.062	0.062
29-Feb-2016	11:44:54	0.062	0.062
29-Feb-2016	11:48:54	0.062	0.062
29-Feb-2016	11:52:54	0.062	0.062
29-Feb-2016	11:56:54	0.062	0.062
29-Feb-2016	12:00:54	0.063	0.062
29-Feb-2016	12:04:54	0.061	0.062
29-Feb-2016	12:08:54	0.061	0.063
29-Feb-2016	12:12:54	0.066	0.064
29-Feb-2016	12:16:54	0.065	0.065
29-Feb-2016	12:20:54	0.064	0.064
29-Feb-2016	12:24:54	0.064	0.065
29-Feb-2016	12:28:54	0.066	0.065
29-Feb-2016	12:32:54	0.065	0.065
29-Feb-2016	12:36:54	0.065	0.065
29-Feb-2016	12:40:54	0.064	0.066
29-Feb-2016	12:44:54	0.068	0.066
29-Feb-2016	12:48:54	0.066	0.066
29-Feb-2016	12:52:54	0.064	0.065
29-Feb-2016	12:56:54	0.066	0.065
29-Feb-2016	13:00:54	0.065	0.065

DUST MONITORING

February 2016

shading indicates values over the threshold

Monitor: 2

Threshold: 0.15 (mg/m^3)

Date	Time	Value (mg/m^3)	TWA (mg/m^3)
29-Feb-2016	13:04:54	0.065	0.065
29-Feb-2016	13:08:54	0.065	0.065
29-Feb-2016	13:12:54	0.066	0.067
29-Feb-2016	13:16:54	0.071	0.068
29-Feb-2016	13:20:54	0.067	0.068
29-Feb-2016	13:24:54	0.065	0.066
29-Feb-2016	13:28:54	0.067	0.068
29-Feb-2016	13:32:54	0.071	0.069
29-Feb-2016	13:36:54	0.069	0.070
29-Feb-2016	13:40:54	0.071	0.071
29-Feb-2016	13:44:54	0.073	0.071
29-Feb-2016	13:48:54	0.069	0.070
29-Feb-2016	13:52:54	0.067	0.068
29-Feb-2016	13:56:54	0.069	0.067
29-Feb-2016	14:00:54	0.066	0.068
29-Feb-2016	14:04:54	0.068	0.066
29-Feb-2016	14:08:54	0.064	0.065
29-Feb-2016	14:12:54	0.064	0.065
29-Feb-2016	14:16:54	0.066	0.065
29-Feb-2016	14:20:54	0.065	0.066
29-Feb-2016	14:24:54	0.067	0.068
29-Feb-2016	14:28:54	0.071	0.067
29-Feb-2016	14:32:54	0.064	0.067
29-Feb-2016	14:36:54	0.066	0.065
29-Feb-2016	14:40:54	0.066	0.069
29-Feb-2016	14:44:54	0.075	0.068
29-Feb-2016	14:48:54	0.063	0.067
29-Feb-2016	14:52:54	0.064	0.064
29-Feb-2016	14:56:54	0.065	0.065
29-Feb-2016	15:00:54	0.066	0.065
29-Feb-2016	15:04:54	0.065	0.067
29-Feb-2016	15:08:54	0.069	0.068
29-Feb-2016	15:12:54	0.069	0.068
29-Feb-2016	15:16:54	0.067	0.067
29-Feb-2016	15:20:54	0.066	0.067
29-Feb-2016	15:24:54	0.067	0.068
29-Feb-2016	15:28:54	0.070	0.068
29-Feb-2016	15:32:54	0.066	0.067
29-Feb-2016	15:36:54	0.066	0.066
29-Feb-2016	15:40:54	0.066	0.066
29-Feb-2016	15:44:54	0.066	0.067

DUST MONITORING

February 2016

shading indicates values over the threshold

Monitor: **2**

Threshold: **0.15 (mg/m^3)**

Date	Time	Value (mg/m^3)	TWA (mg/m^3)
29-Feb-2016	15:48:54	0.068	0.067
29-Feb-2016	15:52:54	0.068	0.068
29-Feb-2016	15:56:54	0.068	0.068
29-Feb-2016	16:00:54	0.069	0.068
29-Feb-2016	16:04:54	0.068	0.069
29-Feb-2016	16:08:54	0.069	0.069

DUST MONITORING

February 2016

shading indicates values over the threshold

Monitor: 3

Threshold: 0.15 (mg/m^3)

Date	Time	Value (mg/m^3)	TWA (mg/m^3)
2-Feb-2016	08:14:58	0.014	0.013
2-Feb-2016	08:18:58	0.012	0.013
2-Feb-2016	08:22:58	0.014	0.014
2-Feb-2016	08:26:58	0.015	0.015
2-Feb-2016	08:30:58	0.016	0.016
2-Feb-2016	08:34:58	0.017	0.017
2-Feb-2016	08:38:58	0.017	0.018
2-Feb-2016	08:42:58	0.019	0.018
2-Feb-2016	08:46:58	0.018	0.018
2-Feb-2016	08:50:58	0.018	0.018
2-Feb-2016	08:54:58	0.017	0.017
2-Feb-2016	08:58:58	0.016	0.016
2-Feb-2016	09:02:58	0.016	0.016
2-Feb-2016	09:06:58	0.017	0.012
2-Feb-2016	11:19:16	0.002	0.013
2-Feb-2016	11:23:16	0.021	0.008
2-Feb-2016	11:27:16	0.001	0.008
2-Feb-2016	11:31:16	0.003	0.006
2-Feb-2016	11:35:16	0.014	0.006
2-Feb-2016	11:39:16	0.001	0.005
2-Feb-2016	11:43:16	0.001	0.001
2-Feb-2016	11:47:16	0.000	0.000
2-Feb-2016	11:51:16	0.000	0.000
2-Feb-2016	11:55:16	0.000	0.000
2-Feb-2016	11:59:16	0.000	0.007
2-Feb-2016	12:03:16	0.021	0.009
2-Feb-2016	12:07:16	0.005	0.009
2-Feb-2016	12:11:16	0.001	0.002
2-Feb-2016	12:15:16	0.000	0.001
2-Feb-2016	12:19:16	0.002	0.001
2-Feb-2016	12:23:16	0.002	0.002
2-Feb-2016	12:27:16	0.003	0.002
2-Feb-2016	12:31:16	0.001	0.002
2-Feb-2016	12:35:16	0.002	0.004
2-Feb-2016	12:39:16	0.010	0.004
2-Feb-2016	12:43:16	0.001	0.005
2-Feb-2016	12:47:16	0.004	0.018
2-Feb-2016	12:51:16	0.048	0.026
2-Feb-2016	12:55:16	0.026	0.036
2-Feb-2016	12:59:16	0.034	0.024
2-Feb-2016	13:03:16	0.013	0.022

DUST MONITORING

February 2016

shading indicates values over the threshold

Monitor: 3

Threshold: 0.15 (mg/m^3)

Date	Time	Value (mg/m^3)	TWA (mg/m^3)
2-Feb-2016	13:07:16	0.020	0.012
2-Feb-2016	13:11:16	0.003	0.012
2-Feb-2016	13:15:16	0.012	0.040
2-Feb-2016	13:19:16	0.105	0.040
2-Feb-2016	13:23:16	0.003	0.038
2-Feb-2016	13:27:16	0.005	0.004
2-Feb-2016	13:31:16	0.003	0.029
2-Feb-2016	13:35:16	0.080	0.039
2-Feb-2016	13:39:16	0.034	0.040
2-Feb-2016	13:43:16	0.005	0.014
2-Feb-2016	13:47:16	0.004	0.004
2-Feb-2016	13:51:16	0.003	0.003
2-Feb-2016	13:55:16	0.003	0.003
2-Feb-2016	13:59:16	0.003	0.003
2-Feb-2016	14:03:16	0.003	0.005
2-Feb-2016	14:07:16	0.010	0.005
2-Feb-2016	14:11:16	0.002	0.005
2-Feb-2016	14:15:16	0.002	0.002
2-Feb-2016	14:19:16	0.003	0.002
2-Feb-2016	14:23:16	0.002	0.004
2-Feb-2016	14:27:16	0.006	0.004
2-Feb-2016	14:31:16	0.003	0.007
2-Feb-2016	14:35:16	0.013	0.007
2-Feb-2016	14:39:16	0.005	0.007
2-Feb-2016	14:43:16	0.003	0.003
2-Feb-2016	14:47:16	0.002	0.002
2-Feb-2016	14:51:16	0.002	0.007
2-Feb-2016	14:55:16	0.016	0.007
2-Feb-2016	14:59:16	0.004	0.008
2-Feb-2016	15:03:16	0.003	0.003
2-Feb-2016	15:07:16	0.002	0.003
2-Feb-2016	15:11:16	0.003	0.003
2-Feb-2016	15:15:16	0.004	0.004
2-Feb-2016	15:19:16	0.004	0.004
2-Feb-2016	15:23:16	0.005	0.005
2-Feb-2016	15:27:16	0.005	0.004
2-Feb-2016	15:31:16	0.003	0.004
2-Feb-2016	15:35:16	0.003	0.003
2-Feb-2016	15:39:16	0.003	0.003
2-Feb-2016	15:43:16	0.003	0.003
2-Feb-2016	15:47:16	0.004	0.004

DUST MONITORING

February 2016

shading indicates values over the threshold

Monitor: 3

Threshold: 0.15 (mg/m^3)

Date	Time	Value (mg/m^3)	TWA (mg/m^3)
2-Feb-2016	15:51:16	0.005	0.005
2-Feb-2016	15:55:16	0.005	0.005
2-Feb-2016	15:59:16	0.005	0.008
2-Feb-2016	16:03:16	0.013	0.007
2-Feb-2016	16:07:16	0.004	0.008
2-Feb-2016	16:11:16	0.007	0.005
2-Feb-2016	16:15:16	0.004	0.005
2-Feb-2016	16:19:16	0.004	0.004
4-Feb-2016	08:25:14	0.007	0.006
4-Feb-2016	08:29:14	0.005	0.006
4-Feb-2016	08:33:14	0.005	0.005
4-Feb-2016	08:37:14	0.006	0.006
4-Feb-2016	08:41:14	0.007	0.007
4-Feb-2016	08:45:14	0.008	0.008
4-Feb-2016	08:49:14	0.008	0.008
4-Feb-2016	08:53:14	0.009	0.009
4-Feb-2016	08:57:14	0.009	0.009
4-Feb-2016	09:01:14	0.010	0.010
4-Feb-2016	09:05:14	0.010	0.010
4-Feb-2016	09:09:14	0.009	0.009
4-Feb-2016	09:13:14	0.009	0.009
4-Feb-2016	09:17:14	0.008	0.009
4-Feb-2016	09:21:14	0.009	0.009
4-Feb-2016	09:25:14	0.009	0.009
4-Feb-2016	09:29:14	0.009	0.009
4-Feb-2016	09:33:14	0.009	0.009
4-Feb-2016	09:37:14	0.008	0.008
4-Feb-2016	09:41:14	0.008	0.008
4-Feb-2016	09:45:14	0.009	0.009
4-Feb-2016	09:49:14	0.010	0.009
4-Feb-2016	09:53:14	0.007	0.008
4-Feb-2016	09:57:14	0.008	0.008
4-Feb-2016	10:01:14	0.010	0.009
4-Feb-2016	10:05:14	0.008	0.008
4-Feb-2016	10:09:14	0.007	0.008
4-Feb-2016	10:13:14	0.008	0.008
4-Feb-2016	10:17:14	0.008	0.009
4-Feb-2016	10:21:14	0.011	0.009
4-Feb-2016	10:25:14	0.007	0.008
4-Feb-2016	10:29:14	0.007	0.007
4-Feb-2016	10:33:14	0.007	0.007

DUST MONITORING

February 2016

shading indicates values over the threshold

Monitor: 3

Threshold: 0.15 (mg/m^3)

Date	Time	Value (mg/m^3)	TWA (mg/m^3)
4-Feb-2016	10:37:14	0.007	0.007
4-Feb-2016	10:41:14	0.007	0.007
4-Feb-2016	10:45:14	0.007	0.007
4-Feb-2016	10:49:14	0.006	0.007
4-Feb-2016	10:53:14	0.007	0.006
4-Feb-2016	10:57:14	0.006	0.006
4-Feb-2016	11:01:14	0.006	0.006
4-Feb-2016	11:05:14	0.006	0.006
4-Feb-2016	11:09:14	0.006	0.007
4-Feb-2016	11:13:14	0.008	0.008
4-Feb-2016	11:17:14	0.009	0.008
4-Feb-2016	11:21:14	0.006	0.007
4-Feb-2016	11:25:14	0.006	0.006
4-Feb-2016	11:29:14	0.006	0.007
4-Feb-2016	11:33:14	0.009	0.009
4-Feb-2016	11:37:14	0.013	0.010
4-Feb-2016	11:41:14	0.007	0.011
4-Feb-2016	11:45:14	0.012	0.009
4-Feb-2016	11:49:14	0.009	0.009
4-Feb-2016	11:53:14	0.007	0.008
4-Feb-2016	11:57:14	0.008	0.008
4-Feb-2016	12:01:14	0.008	0.008
4-Feb-2016	12:05:14	0.007	0.007
4-Feb-2016	12:09:14	0.007	0.007
4-Feb-2016	12:13:14	0.007	0.007
4-Feb-2016	12:17:14	0.007	0.007
4-Feb-2016	12:21:14	0.007	0.007
4-Feb-2016	12:25:14	0.007	0.007
4-Feb-2016	12:29:14	0.006	0.006
4-Feb-2016	12:33:14	0.006	0.006
4-Feb-2016	12:37:14	0.006	0.006
4-Feb-2016	12:41:14	0.006	0.006
4-Feb-2016	12:45:14	0.007	0.006
4-Feb-2016	12:49:14	0.005	0.006
4-Feb-2016	12:53:14	0.007	0.006
4-Feb-2016	12:57:14	0.007	0.006
4-Feb-2016	13:01:14	0.005	0.006
4-Feb-2016	13:05:14	0.005	0.005
4-Feb-2016	13:09:14	0.006	0.006
4-Feb-2016	13:13:14	0.007	0.006
4-Feb-2016	13:17:14	0.006	0.006

DUST MONITORING

February 2016

shading indicates values over the threshold

Monitor: 3

Threshold: 0.15 (mg/m^3)

Date	Time	Value (mg/m^3)	TWA (mg/m^3)
4-Feb-2016	13:21:14	0.006	0.006
4-Feb-2016	13:25:14	0.005	0.005
4-Feb-2016	13:29:14	0.005	0.005
4-Feb-2016	13:33:14	0.006	0.005
4-Feb-2016	13:37:14	0.005	0.006
4-Feb-2016	13:41:14	0.007	0.006
4-Feb-2016	13:45:14	0.005	0.006
4-Feb-2016	13:49:14	0.005	0.005
4-Feb-2016	13:53:14	0.005	0.005
4-Feb-2016	13:57:14	0.004	0.005
4-Feb-2016	14:01:14	0.006	0.004
4-Feb-2016	14:05:14	0.003	0.004
4-Feb-2016	14:09:14	0.004	0.004
4-Feb-2016	14:13:14	0.004	0.004
4-Feb-2016	14:17:14	0.005	0.004
4-Feb-2016	14:21:14	0.004	0.004
4-Feb-2016	14:25:14	0.004	0.004
4-Feb-2016	14:29:14	0.003	0.003
4-Feb-2016	14:33:14	0.003	0.003
4-Feb-2016	14:37:14	0.003	0.005
4-Feb-2016	14:41:14	0.009	0.006
4-Feb-2016	14:45:14	0.005	0.006
4-Feb-2016	14:49:14	0.004	0.004
4-Feb-2016	14:53:14	0.004	0.004
4-Feb-2016	14:57:14	0.003	0.003
4-Feb-2016	15:01:14	0.003	0.003
4-Feb-2016	15:05:14	0.004	0.003
4-Feb-2016	15:09:14	0.003	0.004
4-Feb-2016	15:13:14	0.005	0.005
4-Feb-2016	15:17:14	0.006	0.004
4-Feb-2016	15:21:14	0.002	0.004
4-Feb-2016	15:25:14	0.003	0.002
4-Feb-2016	15:29:14	0.002	0.003
4-Feb-2016	15:33:14	0.004	0.003
4-Feb-2016	15:37:14	0.002	0.003
4-Feb-2016	15:41:14	0.002	0.002
4-Feb-2016	15:45:14	0.002	0.002
4-Feb-2016	15:49:14	0.003	0.003
4-Feb-2016	15:53:14	0.003	0.003
5-Feb-2016	08:26:20	0.002	0.003
5-Feb-2016	08:30:20	0.003	0.002

DUST MONITORING

February 2016

shading indicates values over the threshold

Monitor: 3

Threshold: 0.15 (mg/m^3)

Date	Time	Value (mg/m^3)	TWA (mg/m^3)
5-Feb-2016	08:34:20	0.002	0.003
5-Feb-2016	08:38:20	0.003	0.003
5-Feb-2016	08:42:20	0.003	0.003
5-Feb-2016	08:46:20	0.003	0.003
5-Feb-2016	08:50:20	0.002	0.002
5-Feb-2016	08:54:20	0.001	0.001
5-Feb-2016	08:58:20	0.001	0.001
5-Feb-2016	09:02:20	0.001	0.003
5-Feb-2016	09:06:20	0.006	0.003
5-Feb-2016	09:10:20	0.001	0.003
5-Feb-2016	09:14:20	0.001	0.001
5-Feb-2016	09:18:20	0.001	0.001
5-Feb-2016	09:22:20	0.001	0.001
5-Feb-2016	09:26:20	0.001	0.001
5-Feb-2016	09:30:20	0.001	0.002
5-Feb-2016	09:34:20	0.003	0.002
5-Feb-2016	09:38:20	0.001	0.002
5-Feb-2016	09:42:20	0.001	0.002
5-Feb-2016	09:46:20	0.003	0.002
5-Feb-2016	09:50:20	0.001	0.001
5-Feb-2016	09:54:20	0.000	0.000
5-Feb-2016	09:58:20	0.000	0.000
5-Feb-2016	10:02:20	0.000	0.001
5-Feb-2016	10:06:20	0.002	0.001
5-Feb-2016	10:10:20	0.000	0.001
5-Feb-2016	10:14:20	0.002	0.001
5-Feb-2016	10:18:20	0.001	0.002
5-Feb-2016	10:22:20	0.003	0.002
5-Feb-2016	10:26:20	0.003	0.002
5-Feb-2016	10:30:20	0.000	0.001
5-Feb-2016	10:34:20	0.001	0.000
5-Feb-2016	10:38:20	0.000	0.002
5-Feb-2016	10:42:20	0.005	0.002
5-Feb-2016	10:46:20	0.000	0.002
5-Feb-2016	10:50:20	0.001	0.001
5-Feb-2016	10:54:20	0.001	0.001
5-Feb-2016	10:58:20	0.000	0.002
5-Feb-2016	11:02:20	0.006	0.007
5-Feb-2016	11:06:20	0.016	0.008
5-Feb-2016	11:10:20	0.002	0.007
5-Feb-2016	11:14:20	0.003	0.004

DUST MONITORING

February 2016

shading indicates values over the threshold

Monitor: 3

Threshold: 0.15 (mg/m^3)

Date	Time	Value (mg/m^3)	TWA (mg/m^3)
5-Feb-2016	11:18:20	0.006	0.004
5-Feb-2016	11:22:20	0.003	0.004
5-Feb-2016	11:26:20	0.002	0.002
5-Feb-2016	11:30:20	0.001	0.001
5-Feb-2016	11:34:20	0.000	0.000
5-Feb-2016	11:38:20	0.000	0.001
5-Feb-2016	11:42:20	0.003	0.002
5-Feb-2016	11:46:20	0.002	0.003
5-Feb-2016	11:50:20	0.004	0.002
5-Feb-2016	11:54:20	0.001	0.003
5-Feb-2016	11:58:20	0.003	0.003
5-Feb-2016	12:02:20	0.005	0.004
5-Feb-2016	12:06:20	0.003	0.003
5-Feb-2016	12:10:20	0.001	0.001
5-Feb-2016	12:14:20	0.000	0.000
5-Feb-2016	12:18:20	0.000	0.000
5-Feb-2016	12:22:20	0.001	0.001
5-Feb-2016	12:26:20	0.003	0.004
5-Feb-2016	12:30:20	0.008	0.004
5-Feb-2016	12:34:20	0.002	0.005
5-Feb-2016	12:38:20	0.004	0.002
5-Feb-2016	12:42:20	0.000	0.001
5-Feb-2016	12:46:20	0.000	0.000
5-Feb-2016	12:50:20	0.000	0.003
5-Feb-2016	12:54:20	0.008	0.003
5-Feb-2016	12:58:20	0.001	0.003
5-Feb-2016	13:02:20	0.000	0.000
5-Feb-2016	13:06:20	0.000	0.001
5-Feb-2016	13:10:20	0.003	0.004
5-Feb-2016	13:14:20	0.009	0.004
5-Feb-2016	13:18:20	0.000	0.004
5-Feb-2016	13:22:20	0.004	0.002
5-Feb-2016	13:26:20	0.003	0.005
5-Feb-2016	13:30:20	0.008	0.005
5-Feb-2016	13:34:20	0.004	0.007
5-Feb-2016	13:38:20	0.009	0.008
5-Feb-2016	13:42:20	0.012	0.008
5-Feb-2016	13:46:20	0.004	0.006
5-Feb-2016	13:50:20	0.001	0.002
5-Feb-2016	13:54:20	0.001	0.001
5-Feb-2016	13:58:20	0.002	0.001

DUST MONITORING

February 2016

shading indicates values over the threshold

Monitor: 3

Threshold: 0.15 (mg/m^3)

Date	Time	Value (mg/m^3)	TWA (mg/m^3)
5-Feb-2016	14:02:20	0.000	0.001
5-Feb-2016	14:06:20	0.000	0.000
5-Feb-2016	14:10:20	0.000	0.000
5-Feb-2016	14:14:20	0.000	0.001
5-Feb-2016	14:18:20	0.002	0.002
5-Feb-2016	14:22:20	0.003	0.002
5-Feb-2016	14:26:20	0.001	0.001
5-Feb-2016	14:30:20	0.000	0.001
5-Feb-2016	14:34:20	0.003	0.002
5-Feb-2016	14:38:20	0.003	0.003
5-Feb-2016	14:42:20	0.003	0.006
5-Feb-2016	14:46:20	0.012	0.005
5-Feb-2016	14:50:20	0.000	0.006
5-Feb-2016	14:54:20	0.006	0.002
5-Feb-2016	14:58:20	0.000	0.002
5-Feb-2016	15:02:20	0.000	0.000
5-Feb-2016	15:06:20	0.000	0.000
5-Feb-2016	15:10:20	0.000	0.009
5-Feb-2016	15:14:20	0.027	0.020
5-Feb-2016	15:18:20	0.033	0.021
5-Feb-2016	15:22:20	0.002	0.012
5-Feb-2016	15:26:20	0.000	0.001
5-Feb-2016	15:30:20	0.001	0.008
5-Feb-2016	15:34:20	0.023	0.010
5-Feb-2016	15:38:20	0.006	0.010
5-Feb-2016	15:42:20	0.000	0.002
5-Feb-2016	15:46:20	0.001	0.001
8-Feb-2016	09:45:50	0.032	0.027
8-Feb-2016	09:49:50	0.022	0.025
8-Feb-2016	09:53:50	0.021	0.022
8-Feb-2016	09:57:50	0.022	0.021
8-Feb-2016	10:01:50	0.021	0.022
8-Feb-2016	10:05:50	0.022	0.022
8-Feb-2016	10:09:50	0.024	0.023
8-Feb-2016	10:13:50	0.023	0.023
8-Feb-2016	10:17:50	0.023	0.023
8-Feb-2016	10:21:50	0.022	0.022
8-Feb-2016	10:25:50	0.021	0.021
8-Feb-2016	10:29:50	0.019	0.020
8-Feb-2016	10:33:50	0.019	0.019
8-Feb-2016	10:37:50	0.018	0.019

DUST MONITORING

February 2016

shading indicates values over the threshold

Monitor: 3

Threshold: 0.15 (mg/m^3)

Date	Time	Value (mg/m^3)	TWA (mg/m^3)
8-Feb-2016	10:41:50	0.021	0.020
8-Feb-2016	10:45:50	0.022	0.022
8-Feb-2016	10:49:50	0.024	0.022
8-Feb-2016	10:53:50	0.021	0.022
8-Feb-2016	10:57:50	0.022	0.022
8-Feb-2016	11:01:50	0.024	0.024
8-Feb-2016	11:05:50	0.026	0.024
8-Feb-2016	11:09:50	0.021	0.023
8-Feb-2016	11:13:50	0.023	0.022
8-Feb-2016	11:17:50	0.023	0.022
8-Feb-2016	11:21:50	0.020	0.020
8-Feb-2016	11:25:50	0.017	0.019
8-Feb-2016	11:29:50	0.019	0.018
8-Feb-2016	11:33:50	0.018	0.019
8-Feb-2016	11:37:50	0.020	0.019
8-Feb-2016	11:41:50	0.020	0.020
8-Feb-2016	11:45:50	0.021	0.020
8-Feb-2016	11:49:50	0.019	0.020
8-Feb-2016	11:53:50	0.020	0.020
8-Feb-2016	11:57:50	0.020	0.020
8-Feb-2016	12:01:50	0.019	0.019
8-Feb-2016	12:05:50	0.018	0.018
8-Feb-2016	12:09:50	0.017	0.017
8-Feb-2016	12:13:50	0.016	0.017
8-Feb-2016	12:17:50	0.018	0.018
8-Feb-2016	12:21:50	0.020	0.020
8-Feb-2016	12:25:50	0.022	0.022
8-Feb-2016	12:29:50	0.025	0.022
8-Feb-2016	12:33:50	0.020	0.022
8-Feb-2016	12:37:50	0.020	0.021
8-Feb-2016	12:41:50	0.023	0.021
8-Feb-2016	12:45:50	0.020	0.020
8-Feb-2016	12:49:50	0.017	0.018
8-Feb-2016	12:53:50	0.016	0.017
8-Feb-2016	12:57:50	0.019	0.018
8-Feb-2016	13:01:50	0.019	0.018
8-Feb-2016	13:05:50	0.017	0.016
8-Feb-2016	13:09:50	0.013	0.015
8-Feb-2016	13:13:50	0.014	0.016
8-Feb-2016	13:17:50	0.021	0.020
8-Feb-2016	13:21:50	0.026	0.023

DUST MONITORING

February 2016

shading indicates values over the threshold

Monitor: 3

Threshold: 0.15 (mg/m^3)

Date	Time	Value (mg/m^3)	TWA (mg/m^3)
8-Feb-2016	13:25:50	0.022	0.023
8-Feb-2016	13:29:50	0.020	0.020
8-Feb-2016	13:33:50	0.019	0.019
8-Feb-2016	13:37:50	0.018	0.017
8-Feb-2016	13:41:50	0.015	0.017
8-Feb-2016	13:45:50	0.018	0.016
8-Feb-2016	13:49:50	0.015	0.017
8-Feb-2016	13:53:50	0.018	0.019
8-Feb-2016	13:57:50	0.024	0.019
8-Feb-2016	14:01:50	0.014	0.018
8-Feb-2016	14:05:50	0.017	0.016
9-Feb-2016	08:21:10	0.016	0.013
9-Feb-2016	08:25:10	0.009	0.010
9-Feb-2016	08:29:10	0.006	0.007
9-Feb-2016	08:33:10	0.005	0.007
9-Feb-2016	08:37:10	0.009	0.007
9-Feb-2016	08:41:10	0.006	0.035
9-Feb-2016	08:45:10	0.090	0.035
9-Feb-2016	08:49:10	0.008	0.035
9-Feb-2016	08:53:10	0.008	0.008
9-Feb-2016	08:57:10	0.009	0.007
9-Feb-2016	11:41:21	0.005	0.006
9-Feb-2016	11:45:21	0.003	0.004
9-Feb-2016	11:49:21	0.003	0.003
9-Feb-2016	11:53:21	0.002	0.002
9-Feb-2016	11:57:21	0.002	0.002
9-Feb-2016	12:01:21	0.003	0.003
9-Feb-2016	12:05:21	0.003	0.003
9-Feb-2016	12:09:21	0.004	0.003
9-Feb-2016	12:13:21	0.003	0.003
9-Feb-2016	12:17:21	0.001	0.002
9-Feb-2016	12:21:21	0.001	0.001
9-Feb-2016	12:25:21	0.001	0.001
9-Feb-2016	12:29:21	0.001	0.001
9-Feb-2016	12:33:21	0.002	0.002
9-Feb-2016	12:37:21	0.002	0.002
9-Feb-2016	12:41:21	0.001	0.001
9-Feb-2016	12:45:21	0.001	0.001
9-Feb-2016	12:49:21	0.002	0.001
9-Feb-2016	12:53:21	0.001	0.002
9-Feb-2016	12:57:21	0.002	0.002

DUST MONITORING

February 2016

shading indicates values over the threshold

Monitor: 3

Threshold: 0.15 (mg/m^3)

Date	Time	Value (mg/m^3)	TWA (mg/m^3)
9-Feb-2016	13:01:21	0.003	0.002
9-Feb-2016	13:05:21	0.002	0.003
9-Feb-2016	13:09:21	0.003	0.002
9-Feb-2016	13:13:21	0.002	0.005
9-Feb-2016	13:17:21	0.009	0.004
9-Feb-2016	13:21:21	0.001	0.006
9-Feb-2016	13:25:21	0.007	0.005
9-Feb-2016	13:29:21	0.006	0.005
9-Feb-2016	13:33:21	0.003	0.004
9-Feb-2016	13:37:21	0.004	0.003
9-Feb-2016	13:41:21	0.002	0.003
9-Feb-2016	13:45:21	0.002	0.002
9-Feb-2016	13:49:21	0.002	0.002
9-Feb-2016	13:53:21	0.002	0.002
9-Feb-2016	13:57:21	0.002	0.002
9-Feb-2016	14:01:21	0.002	0.002
9-Feb-2016	14:05:21	0.002	0.002
9-Feb-2016	14:09:21	0.002	0.002
9-Feb-2016	14:13:21	0.002	0.002
9-Feb-2016	14:17:21	0.003	0.002
9-Feb-2016	14:21:21	0.002	0.002
9-Feb-2016	14:25:21	0.002	0.002
9-Feb-2016	14:29:21	0.002	0.002
9-Feb-2016	14:33:21	0.003	0.002
9-Feb-2016	14:37:21	0.002	0.003
9-Feb-2016	14:41:21	0.003	0.004
9-Feb-2016	14:45:21	0.006	0.004
9-Feb-2016	14:49:21	0.002	0.004
9-Feb-2016	14:53:21	0.003	0.003
9-Feb-2016	14:57:21	0.004	0.007
9-Feb-2016	15:01:21	0.014	0.007
9-Feb-2016	15:05:21	0.002	0.006
9-Feb-2016	15:09:21	0.002	0.002
9-Feb-2016	15:13:21	0.003	0.003
9-Feb-2016	15:17:21	0.003	0.003
9-Feb-2016	15:21:21	0.003	0.003
9-Feb-2016	15:25:21	0.002	0.003
9-Feb-2016	15:29:21	0.004	0.003
9-Feb-2016	15:33:21	0.003	0.003
9-Feb-2016	15:37:21	0.003	0.003
9-Feb-2016	15:41:21	0.003	0.003

DUST MONITORING

February 2016

shading indicates values over the threshold

Monitor: 3

Threshold: 0.15 (mg/m^3)

Date	Time	Value (mg/m^3)	TWA (mg/m^3)
9-Feb-2016	15:45:21	0.002	0.002
9-Feb-2016	15:49:21	0.002	0.002
9-Feb-2016	15:53:21	0.002	0.002
9-Feb-2016	15:57:21	0.002	0.004
9-Feb-2016	16:01:21	0.007	0.004
9-Feb-2016	16:05:21	0.002	0.004
9-Feb-2016	16:09:21	0.002	0.004
9-Feb-2016	16:13:21	0.008	0.004
9-Feb-2016	16:17:21	0.003	0.005
9-Feb-2016	16:21:21	0.003	0.003
9-Feb-2016	16:25:21	0.004	0.004
9-Feb-2016	16:29:21	0.004	0.006
9-Feb-2016	16:33:21	0.010	0.006
9-Feb-2016	16:37:21	0.005	0.006
9-Feb-2016	16:41:21	0.004	0.004
9-Feb-2016	16:45:21	0.004	0.006
9-Feb-2016	16:49:21	0.009	0.007
10-Feb-2016	08:31:52	0.019	0.020
10-Feb-2016	08:35:52	0.020	0.020
10-Feb-2016	08:39:52	0.020	0.020
10-Feb-2016	08:43:52	0.020	0.021
10-Feb-2016	08:47:52	0.022	0.022
10-Feb-2016	08:51:52	0.023	0.022
10-Feb-2016	08:55:52	0.022	0.023
10-Feb-2016	08:59:52	0.023	0.022
10-Feb-2016	09:03:52	0.022	0.023
10-Feb-2016	09:07:52	0.023	0.022
10-Feb-2016	09:11:52	0.022	0.023
10-Feb-2016	09:15:52	0.024	0.023
10-Feb-2016	09:19:52	0.022	0.023
10-Feb-2016	09:23:52	0.022	0.022
10-Feb-2016	09:27:52	0.023	0.022
10-Feb-2016	09:31:52	0.022	0.023
11-Feb-2016	09:50:28	0.047	0.051
11-Feb-2016	09:54:28	0.054	0.046
11-Feb-2016	09:58:28	0.036	0.042
11-Feb-2016	10:02:28	0.036	0.039
11-Feb-2016	10:06:28	0.045	0.039
11-Feb-2016	10:10:28	0.035	0.038
11-Feb-2016	10:14:28	0.035	0.035
11-Feb-2016	10:18:28	0.034	0.035

DUST MONITORING

February 2016

shading indicates values over the threshold

Monitor: 3

Threshold: 0.15 (mg/m^3)

Date	Time	Value (mg/m^3)	TWA (mg/m^3)
11-Feb-2016	10:22:28	0.035	0.034
11-Feb-2016	10:26:28	0.034	0.034
11-Feb-2016	10:30:28	0.034	0.034
11-Feb-2016	10:34:28	0.034	0.034
11-Feb-2016	10:38:28	0.035	0.035
11-Feb-2016	10:42:28	0.035	0.035
11-Feb-2016	10:46:28	0.035	0.035
11-Feb-2016	10:50:28	0.035	0.035
11-Feb-2016	10:54:28	0.035	0.035
11-Feb-2016	10:58:28	0.034	0.035
11-Feb-2016	11:02:28	0.036	0.035
11-Feb-2016	11:06:28	0.035	0.036
11-Feb-2016	11:10:28	0.036	0.037
11-Feb-2016	11:14:28	0.041	0.054
11-Feb-2016	11:18:28	0.085	0.055
11-Feb-2016	11:22:28	0.038	0.055
11-Feb-2016	11:26:28	0.043	0.042
11-Feb-2016	11:30:28	0.045	0.042
11-Feb-2016	11:34:28	0.038	0.038
11-Feb-2016	11:38:28	0.031	0.033
11-Feb-2016	11:42:28	0.031	0.031
11-Feb-2016	11:46:28	0.031	0.032
11-Feb-2016	11:50:28	0.035	0.041
11-Feb-2016	11:54:28	0.056	0.041
11-Feb-2016	11:58:28	0.033	0.051
11-Feb-2016	12:02:28	0.065	0.045
11-Feb-2016	12:06:28	0.036	0.054
11-Feb-2016	12:10:28	0.060	0.044
11-Feb-2016	12:14:28	0.035	0.043
11-Feb-2016	12:18:28	0.035	0.035
11-Feb-2016	12:22:28	0.035	0.035
11-Feb-2016	12:26:28	0.034	0.035
11-Feb-2016	12:30:28	0.035	0.035
11-Feb-2016	12:34:28	0.037	0.042
11-Feb-2016	12:38:28	0.053	0.073
11-Feb-2016	12:42:28	0.130	0.074
11-Feb-2016	12:46:28	0.040	0.069
11-Feb-2016	12:50:28	0.036	0.038
11-Feb-2016	12:54:28	0.037	0.037
11-Feb-2016	12:58:28	0.039	0.047
11-Feb-2016	13:02:28	0.065	0.047

DUST MONITORING

February 2016

shading indicates values over the threshold

Monitor: 3

Threshold: 0.15 (mg/m^3)

Date	Time	Value (mg/m^3)	TWA (mg/m^3)
11-Feb-2016	13:06:28	0.037	0.047
11-Feb-2016	13:10:28	0.039	0.037
11-Feb-2016	13:14:28	0.034	0.036
11-Feb-2016	13:18:28	0.036	0.034
11-Feb-2016	13:22:28	0.033	0.033
11-Feb-2016	13:26:28	0.031	0.032
11-Feb-2016	13:30:28	0.031	0.032
11-Feb-2016	13:34:28	0.034	0.032
11-Feb-2016	13:38:28	0.031	0.031
11-Feb-2016	13:42:28	0.029	0.030
11-Feb-2016	13:46:28	0.030	0.030
11-Feb-2016	13:50:28	0.031	0.032
11-Feb-2016	13:54:28	0.034	0.032
11-Feb-2016	13:58:28	0.031	0.032
11-Feb-2016	14:02:28	0.031	0.030
11-Feb-2016	14:06:28	0.028	0.029
11-Feb-2016	14:10:28	0.027	0.028
11-Feb-2016	14:14:28	0.029	0.028
11-Feb-2016	14:18:28	0.028	0.029
11-Feb-2016	14:22:28	0.030	0.031
11-Feb-2016	14:26:28	0.035	0.032
11-Feb-2016	14:30:28	0.030	0.031
11-Feb-2016	14:34:28	0.029	0.030
11-Feb-2016	14:38:28	0.031	0.029
11-Feb-2016	14:42:28	0.027	0.029
11-Feb-2016	14:46:28	0.028	0.028
11-Feb-2016	14:50:28	0.029	0.031
11-Feb-2016	14:54:28	0.035	0.031
11-Feb-2016	14:58:28	0.029	0.031
11-Feb-2016	15:02:28	0.029	0.028
11-Feb-2016	15:06:28	0.027	0.028
11-Feb-2016	15:10:28	0.028	0.027
11-Feb-2016	15:14:28	0.027	0.028
12-Feb-2016	08:57:59	0.030	0.026
12-Feb-2016	09:01:59	0.022	0.024
12-Feb-2016	09:05:59	0.020	0.021
12-Feb-2016	09:09:59	0.020	0.021
12-Feb-2016	09:13:59	0.022	0.022
12-Feb-2016	09:17:59	0.025	0.023
12-Feb-2016	09:21:59	0.023	0.023
12-Feb-2016	09:25:59	0.021	0.022

DUST MONITORING

February 2016

shading indicates values over the threshold

Monitor: 3

Threshold: 0.15 (mg/m^3)

Date	Time	Value (mg/m^3)	TWA (mg/m^3)
12-Feb-2016	09:29:59	0.023	0.022
12-Feb-2016	09:33:59	0.023	0.029
12-Feb-2016	09:37:59	0.041	0.033
12-Feb-2016	09:41:59	0.035	0.038
12-Feb-2016	09:45:59	0.038	0.035
12-Feb-2016	09:49:59	0.032	0.029
12-Feb-2016	09:53:59	0.016	0.026
12-Feb-2016	09:57:59	0.029	0.041
12-Feb-2016	10:01:59	0.078	0.116
12-Feb-2016	10:05:59	0.240	0.341
12-Feb-2016	10:09:59	0.705	0.654
12-Feb-2016	10:13:59	1.016	0.610
12-Feb-2016	10:17:59	0.108	0.493
12-Feb-2016	10:21:59	0.354	0.182
12-Feb-2016	10:25:59	0.084	0.204
12-Feb-2016	10:29:59	0.173	0.106
12-Feb-2016	10:33:59	0.062	0.090
12-Feb-2016	10:37:59	0.035	0.103
12-Feb-2016	10:41:59	0.213	0.100
12-Feb-2016	10:45:59	0.051	0.103
12-Feb-2016	10:49:59	0.044	0.048
12-Feb-2016	10:53:59	0.049	0.041
12-Feb-2016	10:57:59	0.030	0.037
12-Feb-2016	11:01:59	0.031	0.031
12-Feb-2016	11:05:59	0.032	0.036
12-Feb-2016	11:09:59	0.044	0.043
12-Feb-2016	11:13:59	0.052	0.047
12-Feb-2016	11:17:59	0.045	0.044
12-Feb-2016	11:21:59	0.036	0.041
12-Feb-2016	11:25:59	0.041	0.046
12-Feb-2016	11:29:59	0.060	0.054
12-Feb-2016	11:33:59	0.062	0.058
12-Feb-2016	11:37:59	0.051	0.053
12-Feb-2016	11:41:59	0.045	0.047
12-Feb-2016	11:45:59	0.046	0.043
12-Feb-2016	11:49:59	0.038	0.040
12-Feb-2016	11:53:59	0.036	0.037
12-Feb-2016	11:57:59	0.037	0.044
12-Feb-2016	12:01:59	0.060	0.044
12-Feb-2016	12:05:59	0.036	0.045
12-Feb-2016	12:09:59	0.039	0.037

DUST MONITORING

February 2016

shading indicates values over the threshold

Monitor: 3

Threshold: 0.15 (mg/m^3)

Date	Time	Value (mg/m^3)	TWA (mg/m^3)
12-Feb-2016	12:13:59	0.036	0.038
12-Feb-2016	12:17:59	0.038	0.036
12-Feb-2016	12:21:59	0.035	0.037
12-Feb-2016	12:25:59	0.037	0.036
12-Feb-2016	12:29:59	0.036	0.036
12-Feb-2016	12:33:59	0.036	0.036
12-Feb-2016	12:37:59	0.036	0.036
12-Feb-2016	12:41:59	0.036	0.042
12-Feb-2016	12:45:59	0.055	0.046
12-Feb-2016	12:49:59	0.047	0.046
12-Feb-2016	12:53:59	0.037	0.041
12-Feb-2016	12:57:59	0.038	0.037
12-Feb-2016	13:01:59	0.036	0.038
12-Feb-2016	13:05:59	0.040	0.041
12-Feb-2016	13:09:59	0.047	0.042
12-Feb-2016	13:13:59	0.038	0.041
12-Feb-2016	13:17:59	0.038	0.038
12-Feb-2016	13:21:59	0.038	0.039
12-Feb-2016	13:25:59	0.041	0.039
12-Feb-2016	13:29:59	0.039	0.040
12-Feb-2016	13:33:59	0.039	0.039
12-Feb-2016	13:37:59	0.039	0.038
12-Feb-2016	13:41:59	0.037	0.048
12-Feb-2016	13:45:59	0.067	0.049
12-Feb-2016	13:49:59	0.042	0.055
12-Feb-2016	13:53:59	0.056	0.048
12-Feb-2016	13:57:59	0.046	0.057
12-Feb-2016	14:01:59	0.069	0.052
12-Feb-2016	14:05:59	0.041	0.052
12-Feb-2016	14:09:59	0.046	0.082
12-Feb-2016	14:13:59	0.159	0.082
12-Feb-2016	14:17:59	0.041	0.084
12-Feb-2016	14:21:59	0.053	0.045
12-Feb-2016	14:25:59	0.041	0.049
12-Feb-2016	14:29:59	0.053	0.046
12-Feb-2016	14:33:59	0.043	0.049
12-Feb-2016	14:37:59	0.052	0.047
12-Feb-2016	14:41:59	0.047	0.046
12-Feb-2016	14:45:59	0.038	0.041
12-Feb-2016	14:49:59	0.037	0.039
12-Feb-2016	14:53:59	0.042	0.041

DUST MONITORING

February 2016

shading indicates values over the threshold

Monitor: 3

Threshold: 0.15 (mg/m^3)

Date	Time	Value (mg/m^3)	TWA (mg/m^3)
12-Feb-2016	14:57:59	0.044	0.042
12-Feb-2016	15:01:59	0.040	0.041
12-Feb-2016	15:05:59	0.040	0.039
12-Feb-2016	15:09:59	0.038	0.038
12-Feb-2016	15:13:59	0.037	0.037
12-Feb-2016	15:17:59	0.037	0.037
12-Feb-2016	15:21:59	0.038	0.038
12-Feb-2016	15:25:59	0.040	0.039
16-Feb-2016	08:23:33	0.033	0.034
16-Feb-2016	08:27:33	0.035	0.032
16-Feb-2016	08:31:33	0.029	0.047
16-Feb-2016	08:35:33	0.078	0.145
16-Feb-2016	08:39:33	0.329	0.250
16-Feb-2016	08:43:33	0.344	0.293
16-Feb-2016	08:47:33	0.206	0.254
16-Feb-2016	08:51:33	0.213	0.177
16-Feb-2016	08:55:33	0.113	0.165
16-Feb-2016	08:59:33	0.169	0.168
16-Feb-2016	09:03:33	0.221	0.176
16-Feb-2016	09:07:33	0.137	0.132
16-Feb-2016	09:11:33	0.039	0.071
16-Feb-2016	09:15:33	0.038	0.038
16-Feb-2016	09:19:33	0.037	0.037
16-Feb-2016	09:23:33	0.036	0.036
16-Feb-2016	09:27:33	0.036	0.036
16-Feb-2016	09:31:33	0.036	0.036
16-Feb-2016	09:35:33	0.035	0.035
16-Feb-2016	09:39:33	0.033	0.033
16-Feb-2016	09:43:33	0.032	0.032
16-Feb-2016	09:47:33	0.030	0.031
16-Feb-2016	09:51:33	0.030	0.030
16-Feb-2016	09:55:33	0.029	0.029
16-Feb-2016	09:59:33	0.028	0.028
16-Feb-2016	10:03:33	0.028	0.028
16-Feb-2016	10:07:33	0.028	0.028
16-Feb-2016	10:11:33	0.027	0.027
16-Feb-2016	10:15:33	0.027	0.029
16-Feb-2016	10:19:33	0.032	0.030
16-Feb-2016	10:23:33	0.031	0.029
16-Feb-2016	10:27:33	0.025	0.027
16-Feb-2016	10:31:33	0.024	0.025

DUST MONITORING

February 2016

shading indicates values over the threshold

Monitor: 3

Threshold: 0.15 (mg/m^3)

Date	Time	Value (mg/m^3)	TWA (mg/m^3)
16-Feb-2016	10:35:33	0.027	0.026
16-Feb-2016	10:39:33	0.028	0.027
16-Feb-2016	10:43:33	0.026	0.026
16-Feb-2016	10:47:33	0.025	0.025
16-Feb-2016	10:51:33	0.025	0.030
16-Feb-2016	10:55:33	0.041	0.031
16-Feb-2016	10:59:33	0.028	0.032
16-Feb-2016	11:03:33	0.028	0.028
16-Feb-2016	11:07:33	0.028	0.027
16-Feb-2016	11:11:33	0.026	0.027
16-Feb-2016	11:15:33	0.027	0.027
16-Feb-2016	11:19:33	0.028	0.027
16-Feb-2016	11:23:33	0.027	0.027
16-Feb-2016	11:27:33	0.027	0.027
16-Feb-2016	11:31:33	0.026	0.026
16-Feb-2016	11:35:33	0.026	0.026
16-Feb-2016	11:39:33	0.027	0.026
16-Feb-2016	11:43:33	0.026	0.026
16-Feb-2016	11:47:33	0.026	0.026
16-Feb-2016	11:51:33	0.025	0.025
16-Feb-2016	11:55:33	0.025	0.025
16-Feb-2016	11:59:33	0.025	0.025
16-Feb-2016	12:03:33	0.025	0.025
16-Feb-2016	12:07:33	0.025	0.025
16-Feb-2016	12:11:33	0.025	0.025
16-Feb-2016	12:15:33	0.026	0.029
16-Feb-2016	12:19:33	0.035	0.030
16-Feb-2016	12:23:33	0.028	0.029
16-Feb-2016	12:27:33	0.025	0.027
16-Feb-2016	12:31:33	0.027	0.026
16-Feb-2016	12:35:33	0.025	0.026
16-Feb-2016	12:39:33	0.025	0.028
16-Feb-2016	12:43:33	0.035	0.036
16-Feb-2016	12:47:33	0.048	0.045
16-Feb-2016	12:51:33	0.052	0.048
16-Feb-2016	12:55:33	0.045	0.044
16-Feb-2016	12:59:33	0.036	0.037
16-Feb-2016	13:03:33	0.030	0.031
16-Feb-2016	13:07:33	0.027	0.027
16-Feb-2016	13:11:33	0.024	0.024
16-Feb-2016	13:15:33	0.022	0.023

DUST MONITORING

February 2016

shading indicates values over the threshold

Monitor: 3

Threshold: 0.15 (mg/m^3)

Date	Time	Value (mg/m^3)	TWA (mg/m^3)
16-Feb-2016	13:19:33	0.022	0.023
16-Feb-2016	13:23:33	0.026	0.037
16-Feb-2016	13:27:33	0.064	0.043
16-Feb-2016	13:31:33	0.039	0.050
16-Feb-2016	13:35:33	0.047	0.039
16-Feb-2016	13:39:33	0.032	0.036
16-Feb-2016	13:43:33	0.030	0.030
16-Feb-2016	13:47:33	0.029	0.030
16-Feb-2016	13:51:33	0.031	0.031
16-Feb-2016	13:55:33	0.033	0.030
16-Feb-2016	13:59:33	0.027	0.029
16-Feb-2016	14:03:33	0.026	0.026
16-Feb-2016	14:07:33	0.025	0.026
16-Feb-2016	14:11:33	0.027	0.029
16-Feb-2016	14:15:33	0.036	0.030
16-Feb-2016	14:19:33	0.027	0.032
17-Feb-2016	09:32:21	0.022	0.023
17-Feb-2016	09:36:21	0.023	0.023
17-Feb-2016	09:40:21	0.023	0.023
17-Feb-2016	09:44:21	0.023	0.023
17-Feb-2016	09:48:21	0.022	0.022
17-Feb-2016	09:52:21	0.022	0.022
17-Feb-2016	09:56:21	0.022	0.022
17-Feb-2016	10:00:21	0.023	0.023
17-Feb-2016	10:04:21	0.023	0.023
17-Feb-2016	10:08:21	0.024	0.023
17-Feb-2016	10:12:21	0.022	0.023
17-Feb-2016	10:16:21	0.023	0.023
17-Feb-2016	10:20:21	0.023	0.023
17-Feb-2016	10:24:21	0.023	0.023
17-Feb-2016	10:28:21	0.023	0.023
17-Feb-2016	10:32:21	0.023	0.024
17-Feb-2016	10:36:21	0.025	0.024
17-Feb-2016	10:40:21	0.024	0.024
17-Feb-2016	10:44:21	0.023	0.023
17-Feb-2016	10:48:21	0.022	0.022
17-Feb-2016	10:52:21	0.022	0.022
17-Feb-2016	10:56:21	0.023	0.023
17-Feb-2016	11:00:21	0.023	0.023
17-Feb-2016	11:04:21	0.022	0.022
17-Feb-2016	11:08:21	0.022	0.022

DUST MONITORING

February 2016

shading indicates values over the threshold

Monitor: 3

Threshold: 0.15 (mg/m^3)

Date	Time	Value (mg/m^3)	TWA (mg/m^3)
17-Feb-2016	11:12:21	0.023	0.022
17-Feb-2016	11:16:21	0.022	0.022
17-Feb-2016	11:20:21	0.022	0.023
17-Feb-2016	11:24:21	0.024	0.023
17-Feb-2016	11:28:21	0.023	0.023
17-Feb-2016	11:32:21	0.023	0.023
17-Feb-2016	11:36:21	0.023	0.023
17-Feb-2016	11:40:21	0.023	0.023
17-Feb-2016	11:44:21	0.023	0.023
17-Feb-2016	11:48:21	0.022	0.023
17-Feb-2016	11:52:21	0.023	0.023
17-Feb-2016	11:56:21	0.023	0.023
17-Feb-2016	12:00:21	0.023	0.023
17-Feb-2016	12:04:21	0.023	0.025
17-Feb-2016	12:08:21	0.028	0.026
17-Feb-2016	12:12:21	0.026	0.026
17-Feb-2016	12:16:21	0.025	0.025
17-Feb-2016	12:20:21	0.024	0.025
17-Feb-2016	12:24:21	0.026	0.025
17-Feb-2016	12:28:21	0.025	0.026
17-Feb-2016	12:32:21	0.027	0.026
17-Feb-2016	12:36:21	0.026	0.026
17-Feb-2016	12:40:21	0.026	0.026
17-Feb-2016	12:44:21	0.027	0.026
17-Feb-2016	12:48:21	0.026	0.026
17-Feb-2016	12:52:21	0.025	0.025
17-Feb-2016	12:56:21	0.025	0.025
17-Feb-2016	13:00:21	0.026	0.025
17-Feb-2016	13:04:21	0.025	0.025
17-Feb-2016	13:08:21	0.025	0.025
17-Feb-2016	13:12:21	0.026	0.026
17-Feb-2016	13:16:21	0.028	0.027
17-Feb-2016	13:20:21	0.027	0.028
17-Feb-2016	13:24:21	0.029	0.028
17-Feb-2016	13:28:21	0.028	0.028
17-Feb-2016	13:32:21	0.027	0.027
17-Feb-2016	13:36:21	0.027	0.027
17-Feb-2016	13:40:21	0.028	0.027
17-Feb-2016	13:44:21	0.027	0.027
17-Feb-2016	13:48:21	0.027	0.027
17-Feb-2016	13:52:21	0.027	0.027

DUST MONITORING

February 2016

shading indicates values over the threshold

Monitor: 3

Threshold: 0.15 (mg/m^3)

Date	Time	Value (mg/m^3)	TWA (mg/m^3)
17-Feb-2016	13:56:21	0.028	0.027
17-Feb-2016	14:00:21	0.027	0.027
17-Feb-2016	14:04:21	0.027	0.027
17-Feb-2016	14:08:21	0.027	0.027
17-Feb-2016	14:12:21	0.028	0.027
17-Feb-2016	14:16:21	0.027	0.028
17-Feb-2016	14:20:21	0.028	0.028
17-Feb-2016	14:24:21	0.029	0.029
17-Feb-2016	14:28:21	0.029	0.029
17-Feb-2016	14:32:21	0.028	0.028
17-Feb-2016	14:36:21	0.028	0.028
17-Feb-2016	14:40:21	0.027	0.028
17-Feb-2016	14:44:21	0.028	0.028
17-Feb-2016	14:48:21	0.029	0.030
17-Feb-2016	14:52:21	0.033	0.030
17-Feb-2016	14:56:21	0.028	0.030
17-Feb-2016	15:00:21	0.029	0.029
17-Feb-2016	15:04:21	0.031	0.029
17-Feb-2016	15:08:21	0.028	0.029
17-Feb-2016	15:12:21	0.028	0.028
17-Feb-2016	15:16:21	0.028	0.029
17-Feb-2016	15:20:21	0.030	0.029
17-Feb-2016	15:24:21	0.028	0.029
17-Feb-2016	15:28:21	0.029	0.029
17-Feb-2016	15:32:21	0.031	0.030
17-Feb-2016	15:36:21	0.030	0.031
17-Feb-2016	15:40:21	0.031	0.030
17-Feb-2016	15:44:21	0.029	0.030
17-Feb-2016	15:48:21	0.029	0.029
17-Feb-2016	15:52:21	0.030	0.031
17-Feb-2016	15:56:21	0.034	0.033
17-Feb-2016	16:00:21	0.036	0.035
17-Feb-2016	16:04:21	0.036	0.034
17-Feb-2016	16:08:21	0.030	0.033
17-Feb-2016	16:12:21	0.033	0.031
17-Feb-2016	16:16:21	0.031	0.032
17-Feb-2016	16:20:21	0.031	0.031
17-Feb-2016	16:24:21	0.031	0.032
17-Feb-2016	16:28:21	0.033	0.032
17-Feb-2016	16:32:21	0.032	0.032
17-Feb-2016	16:36:21	0.032	0.032

DUST MONITORING

February 2016

shading indicates values over the threshold

Monitor: 3

Threshold: 0.15 (mg/m^3)

Date	Time	Value (mg/m^3)	TWA (mg/m^3)
17-Feb-2016	16:40:21	0.032	0.032
17-Feb-2016	16:44:21	0.033	0.033
17-Feb-2016	16:48:21	0.033	0.033
17-Feb-2016	16:52:21	0.034	0.034
17-Feb-2016	16:56:21	0.035	0.034
17-Feb-2016	17:00:21	0.033	0.034
17-Feb-2016	17:04:21	0.034	0.034
17-Feb-2016	17:08:21	0.034	0.034
17-Feb-2016	17:12:21	0.034	0.034
17-Feb-2016	17:16:21	0.034	0.034
17-Feb-2016	17:20:21	0.034	0.034
17-Feb-2016	17:24:21	0.034	0.034
17-Feb-2016	17:28:21	0.034	0.034
17-Feb-2016	17:32:21	0.034	0.034
18-Feb-2016	09:58:01	0.029	0.029
18-Feb-2016	10:02:01	0.028	0.029
18-Feb-2016	10:06:01	0.029	0.029
18-Feb-2016	10:10:01	0.030	0.030
18-Feb-2016	10:14:01	0.030	0.030
18-Feb-2016	10:18:01	0.029	0.030
18-Feb-2016	10:22:01	0.030	0.030
18-Feb-2016	10:26:01	0.031	0.029
18-Feb-2016	10:30:01	0.025	0.027
18-Feb-2016	10:34:01	0.025	0.025
18-Feb-2016	10:38:01	0.026	0.025
18-Feb-2016	10:42:01	0.024	0.024
18-Feb-2016	10:46:01	0.023	0.024
18-Feb-2016	10:50:01	0.025	0.024
18-Feb-2016	10:54:01	0.023	0.024
18-Feb-2016	10:58:01	0.023	0.023
18-Feb-2016	11:02:01	0.023	0.023
18-Feb-2016	11:06:01	0.023	0.023
18-Feb-2016	11:10:01	0.023	0.024
18-Feb-2016	11:14:01	0.025	0.024
18-Feb-2016	11:18:01	0.023	0.024
18-Feb-2016	11:22:01	0.024	0.025
18-Feb-2016	11:26:01	0.028	0.025
18-Feb-2016	11:30:01	0.023	0.028
18-Feb-2016	11:34:01	0.034	0.028
18-Feb-2016	11:38:01	0.028	0.028
18-Feb-2016	11:42:01	0.023	0.028

DUST MONITORING

February 2016

shading indicates values over the threshold

Monitor: 3

Threshold: 0.15 (mg/m^3)

Date	Time	Value (mg/m^3)	TWA (mg/m^3)
18-Feb-2016	11:46:01	0.034	0.027
18-Feb-2016	11:50:01	0.024	0.027
18-Feb-2016	11:54:01	0.024	0.025
18-Feb-2016	11:58:01	0.026	0.024
18-Feb-2016	12:02:01	0.023	0.025
18-Feb-2016	12:06:01	0.025	0.025
18-Feb-2016	12:10:01	0.027	0.025
18-Feb-2016	12:14:01	0.024	0.025
18-Feb-2016	12:18:01	0.023	0.023
18-Feb-2016	12:22:01	0.023	0.023
18-Feb-2016	12:26:01	0.023	0.023
18-Feb-2016	12:30:01	0.023	0.023
18-Feb-2016	12:34:01	0.023	0.023
18-Feb-2016	12:38:01	0.024	0.024
18-Feb-2016	12:42:01	0.024	0.024
18-Feb-2016	12:46:01	0.024	0.024
18-Feb-2016	12:50:01	0.024	0.025
18-Feb-2016	12:54:01	0.028	0.026
18-Feb-2016	12:58:01	0.027	0.028
18-Feb-2016	13:02:01	0.028	0.027
18-Feb-2016	13:06:01	0.025	0.026
18-Feb-2016	13:10:01	0.024	0.025
18-Feb-2016	13:14:01	0.026	0.025
18-Feb-2016	13:18:01	0.025	0.025
18-Feb-2016	13:22:01	0.025	0.025
18-Feb-2016	13:26:01	0.026	0.026
18-Feb-2016	13:30:01	0.026	0.026
18-Feb-2016	13:34:01	0.025	0.025
18-Feb-2016	13:38:01	0.025	0.025
18-Feb-2016	13:42:01	0.025	0.025
18-Feb-2016	13:46:01	0.025	0.025
18-Feb-2016	13:50:01	0.025	0.025
18-Feb-2016	13:54:01	0.026	0.025
18-Feb-2016	13:58:01	0.025	0.026
18-Feb-2016	14:02:01	0.026	0.026
18-Feb-2016	14:06:01	0.026	0.026
18-Feb-2016	14:10:01	0.026	0.026
18-Feb-2016	14:14:01	0.025	0.030
18-Feb-2016	14:18:01	0.039	0.035
18-Feb-2016	14:22:01	0.041	0.037
18-Feb-2016	14:26:01	0.032	0.033

DUST MONITORING

February 2016

shading indicates values over the threshold

Monitor: 3

Threshold: 0.15 (mg/m^3)

Date	Time	Value (mg/m^3)	TWA (mg/m^3)
18-Feb-2016	14:30:01	0.026	0.029
18-Feb-2016	14:34:01	0.029	0.031
18-Feb-2016	14:38:01	0.037	0.037
18-Feb-2016	14:42:01	0.045	0.037
18-Feb-2016	14:46:01	0.029	0.034
18-Feb-2016	14:50:01	0.027	0.027
18-Feb-2016	14:54:01	0.025	0.028
18-Feb-2016	14:58:01	0.031	0.027
18-Feb-2016	15:02:01	0.025	0.027
18-Feb-2016	15:06:01	0.024	0.024
18-Feb-2016	15:10:01	0.024	0.024
18-Feb-2016	15:14:01	0.023	0.023
18-Feb-2016	15:18:01	0.023	0.023
18-Feb-2016	15:22:01	0.023	0.023
18-Feb-2016	15:26:01	0.022	0.022
18-Feb-2016	15:30:01	0.022	0.022
18-Feb-2016	15:34:01	0.022	0.024
18-Feb-2016	15:38:01	0.028	0.030
18-Feb-2016	15:42:01	0.041	0.030
18-Feb-2016	15:46:01	0.022	0.028
18-Feb-2016	15:50:01	0.022	0.034
18-Feb-2016	15:54:01	0.057	0.034
18-Feb-2016	15:58:01	0.023	0.088
18-Feb-2016	16:02:01	0.185	0.084
18-Feb-2016	16:06:01	0.043	0.114
19-Feb-2016	12:27:14	0.033	0.031
19-Feb-2016	12:31:14	0.029	0.030
19-Feb-2016	12:35:14	0.028	0.028
19-Feb-2016	12:39:14	0.027	0.027
19-Feb-2016	12:43:14	0.027	0.028
19-Feb-2016	12:47:14	0.030	0.028
19-Feb-2016	12:51:14	0.027	0.028
19-Feb-2016	12:55:14	0.026	0.026
19-Feb-2016	12:59:14	0.026	0.026
19-Feb-2016	13:03:14	0.026	0.026
19-Feb-2016	13:07:14	0.025	0.026
19-Feb-2016	13:11:14	0.026	0.026
19-Feb-2016	13:15:14	0.026	0.026
19-Feb-2016	13:19:14	0.025	0.025
19-Feb-2016	13:23:14	0.025	0.025
19-Feb-2016	13:27:14	0.025	0.025

DUST MONITORING

February 2016

shading indicates values over the threshold

Monitor: 3

Threshold: 0.15 (mg/m^3)

Date	Time	Value (mg/m^3)	TWA (mg/m^3)
19-Feb-2016	13:31:14	0.025	0.025
19-Feb-2016	13:35:14	0.025	0.025
19-Feb-2016	13:39:14	0.025	0.025
19-Feb-2016	13:43:14	0.025	0.025
19-Feb-2016	13:47:14	0.025	0.025
19-Feb-2016	13:51:14	0.025	0.025
19-Feb-2016	13:55:14	0.025	0.025
19-Feb-2016	13:59:14	0.024	0.024
19-Feb-2016	14:03:14	0.024	0.025
19-Feb-2016	14:07:14	0.028	0.026
19-Feb-2016	14:11:14	0.025	0.026
19-Feb-2016	14:15:14	0.025	0.025
19-Feb-2016	14:19:14	0.024	0.024
19-Feb-2016	14:23:14	0.024	0.024
19-Feb-2016	14:27:14	0.023	0.024
19-Feb-2016	14:31:14	0.025	0.024
19-Feb-2016	14:35:14	0.024	0.024
19-Feb-2016	14:39:14	0.024	0.024
19-Feb-2016	14:43:14	0.024	0.024
19-Feb-2016	14:47:14	0.025	0.025
19-Feb-2016	14:51:14	0.025	0.025
19-Feb-2016	14:55:14	0.026	0.025
19-Feb-2016	14:59:14	0.025	0.025
19-Feb-2016	15:03:14	0.025	0.025
19-Feb-2016	15:07:14	0.026	0.025
19-Feb-2016	15:11:14	0.025	0.026
19-Feb-2016	15:15:14	0.026	0.026
19-Feb-2016	15:19:14	0.026	0.026
19-Feb-2016	15:23:14	0.027	0.026
19-Feb-2016	15:27:14	0.026	0.028
19-Feb-2016	15:31:14	0.031	0.028
19-Feb-2016	15:35:14	0.028	0.029
19-Feb-2016	15:39:14	0.028	0.028
19-Feb-2016	15:43:14	0.028	0.028
19-Feb-2016	15:47:14	0.028	0.028
19-Feb-2016	15:51:14	0.029	0.028
19-Feb-2016	15:55:14	0.027	0.028
19-Feb-2016	15:59:14	0.027	0.027
19-Feb-2016	16:03:14	0.028	0.027
19-Feb-2016	16:07:14	0.026	0.027
19-Feb-2016	16:11:14	0.026	0.026

DUST MONITORING

February 2016

shading indicates values over the threshold

Monitor: 3

Threshold: 0.15 (mg/m^3)

Date	Time	Value (mg/m^3)	TWA (mg/m^3)
19-Feb-2016	16:15:14	0.027	0.027
19-Feb-2016	16:19:14	0.028	0.028
19-Feb-2016	16:23:14	0.028	0.027
19-Feb-2016	16:27:14	0.026	0.027
19-Feb-2016	16:31:14	0.026	0.026
19-Feb-2016	16:35:14	0.026	0.026
19-Feb-2016	16:39:14	0.026	0.026
25-Feb-2016	08:24:24	0.040	0.038
25-Feb-2016	08:28:24	0.035	0.037
25-Feb-2016	08:32:24	0.036	0.036
25-Feb-2016	08:36:24	0.036	0.036
25-Feb-2016	08:40:24	0.036	0.037
25-Feb-2016	08:44:24	0.038	0.037
25-Feb-2016	08:48:24	0.038	0.038
25-Feb-2016	08:52:24	0.037	0.037
25-Feb-2016	08:56:24	0.037	0.037
25-Feb-2016	09:00:24	0.038	0.038
25-Feb-2016	09:04:24	0.038	0.038
25-Feb-2016	09:08:24	0.038	0.038
25-Feb-2016	09:12:24	0.038	0.038
25-Feb-2016	09:16:24	0.038	0.038
25-Feb-2016	09:20:24	0.039	0.039
25-Feb-2016	09:24:24	0.039	0.039
25-Feb-2016	09:28:24	0.038	0.039
25-Feb-2016	09:32:24	0.040	0.039
25-Feb-2016	09:36:24	0.039	0.039
25-Feb-2016	09:40:24	0.039	0.039
25-Feb-2016	09:44:24	0.040	0.040
25-Feb-2016	09:48:24	0.040	0.040
25-Feb-2016	09:52:24	0.040	0.039
25-Feb-2016	09:56:24	0.038	0.039
25-Feb-2016	10:00:24	0.039	0.039
25-Feb-2016	10:04:24	0.039	0.039
25-Feb-2016	10:08:24	0.039	0.038
25-Feb-2016	10:12:24	0.037	0.038
25-Feb-2016	10:16:24	0.037	0.037
25-Feb-2016	10:20:24	0.037	0.038
25-Feb-2016	10:24:24	0.039	0.039
25-Feb-2016	10:28:24	0.040	0.039
25-Feb-2016	10:32:24	0.038	0.039
25-Feb-2016	10:36:24	0.038	0.038

DUST MONITORING

February 2016

shading indicates values over the threshold

Monitor: 3

Threshold: 0.15 (mg/m^3)

Date	Time	Value (mg/m^3)	TWA (mg/m^3)
25-Feb-2016	10:40:24	0.038	0.038
25-Feb-2016	10:44:24	0.038	0.039
25-Feb-2016	10:48:24	0.040	0.039
25-Feb-2016	10:52:24	0.039	0.039
25-Feb-2016	10:56:24	0.039	0.039
25-Feb-2016	11:00:24	0.040	0.040
25-Feb-2016	11:04:24	0.040	0.040
25-Feb-2016	11:08:24	0.040	0.039
25-Feb-2016	11:12:24	0.038	0.038
25-Feb-2016	11:16:24	0.037	0.037
25-Feb-2016	11:20:24	0.037	0.037
25-Feb-2016	11:24:24	0.037	0.037
25-Feb-2016	11:28:24	0.036	0.036
25-Feb-2016	11:32:24	0.035	0.036
25-Feb-2016	11:36:24	0.036	0.036
25-Feb-2016	11:40:24	0.036	0.036
25-Feb-2016	11:44:24	0.036	0.036
25-Feb-2016	11:48:24	0.036	0.036
25-Feb-2016	11:52:24	0.037	0.036
25-Feb-2016	11:56:24	0.036	0.037
25-Feb-2016	12:00:24	0.038	0.037
25-Feb-2016	12:04:24	0.037	0.037
25-Feb-2016	12:08:24	0.035	0.036
25-Feb-2016	12:12:24	0.035	0.035
25-Feb-2016	12:16:24	0.035	0.035
25-Feb-2016	12:20:24	0.035	0.035
25-Feb-2016	12:24:24	0.035	0.035
25-Feb-2016	12:28:24	0.036	0.036
25-Feb-2016	12:32:24	0.038	0.038
25-Feb-2016	12:36:24	0.040	0.039
25-Feb-2016	12:40:24	0.039	0.038
25-Feb-2016	12:44:24	0.036	0.037
25-Feb-2016	12:48:24	0.036	0.037
25-Feb-2016	12:52:24	0.039	0.038
25-Feb-2016	12:56:24	0.038	0.039
25-Feb-2016	13:00:24	0.039	0.039
25-Feb-2016	13:04:24	0.039	0.039
25-Feb-2016	13:08:24	0.038	0.038
25-Feb-2016	13:12:24	0.037	0.039
25-Feb-2016	13:16:24	0.041	0.038
25-Feb-2016	13:20:24	0.035	0.038

DUST MONITORING

February 2016

shading indicates values over the threshold

Monitor: 3

Threshold: 0.15 (mg/m^3)

Date	Time	Value (mg/m^3)	TWA (mg/m^3)
25-Feb-2016	13:24:24	0.037	0.036
25-Feb-2016	13:28:24	0.036	0.036
25-Feb-2016	13:32:24	0.036	0.035
25-Feb-2016	13:36:24	0.034	0.035
25-Feb-2016	13:40:24	0.035	0.036
25-Feb-2016	13:44:24	0.039	0.037
25-Feb-2016	13:48:24	0.036	0.038
25-Feb-2016	13:52:24	0.039	0.037
25-Feb-2016	13:56:24	0.035	0.036
25-Feb-2016	14:00:24	0.033	0.033
25-Feb-2016	14:04:24	0.031	0.032
25-Feb-2016	14:08:24	0.031	0.031
25-Feb-2016	14:12:24	0.031	0.031
25-Feb-2016	14:16:24	0.032	0.032
25-Feb-2016	14:20:24	0.032	0.032
25-Feb-2016	14:24:24	0.033	0.032
25-Feb-2016	14:28:24	0.031	0.032
25-Feb-2016	14:32:24	0.033	0.032
25-Feb-2016	14:36:24	0.032	0.032
25-Feb-2016	14:40:24	0.031	0.031
25-Feb-2016	14:44:24	0.031	0.031
25-Feb-2016	14:48:24	0.031	0.031
25-Feb-2016	14:52:24	0.032	0.032
25-Feb-2016	14:56:24	0.032	0.032
25-Feb-2016	15:00:24	0.031	0.031
25-Feb-2016	15:04:24	0.031	0.031
25-Feb-2016	15:08:24	0.031	0.031
25-Feb-2016	15:12:24	0.032	0.031
25-Feb-2016	15:16:24	0.031	0.031
25-Feb-2016	15:20:24	0.031	0.031
25-Feb-2016	15:24:24	0.030	0.031
25-Feb-2016	15:28:24	0.032	0.031
25-Feb-2016	15:32:24	0.031	0.032
25-Feb-2016	15:36:24	0.032	0.032
25-Feb-2016	15:40:24	0.032	0.032
25-Feb-2016	15:44:24	0.031	0.031
25-Feb-2016	15:48:24	0.029	0.029
25-Feb-2016	15:52:24	0.028	0.028
25-Feb-2016	15:56:24	0.028	0.028
25-Feb-2016	16:00:24	0.028	0.028
25-Feb-2016	16:04:24	0.029	0.028

DUST MONITORING

February 2016

shading indicates values over the threshold

Monitor: 3

Threshold: 0.15 (mg/m^3)

Date	Time	Value (mg/m^3)	TWA (mg/m^3)
25-Feb-2016	16:08:24	0.028	0.029
25-Feb-2016	16:12:24	0.031	0.029
25-Feb-2016	16:16:24	0.029	0.030
29-Feb-2016	09:44:54	0.062	0.060
29-Feb-2016	09:48:54	0.058	0.059
29-Feb-2016	09:52:54	0.058	0.059
29-Feb-2016	09:56:54	0.060	0.059
29-Feb-2016	10:00:54	0.058	0.059
29-Feb-2016	10:04:54	0.059	0.058
29-Feb-2016	10:08:54	0.058	0.059
29-Feb-2016	10:12:54	0.059	0.058
29-Feb-2016	10:16:54	0.058	0.058
29-Feb-2016	10:20:54	0.056	0.057
29-Feb-2016	10:24:54	0.056	0.056
29-Feb-2016	10:28:54	0.056	0.057
29-Feb-2016	10:32:54	0.058	0.057
29-Feb-2016	10:36:54	0.057	0.056
29-Feb-2016	10:40:54	0.054	0.055
29-Feb-2016	10:44:54	0.054	0.056
29-Feb-2016	10:48:54	0.059	0.057
29-Feb-2016	10:52:54	0.059	0.058
29-Feb-2016	10:56:54	0.056	0.058
29-Feb-2016	11:00:54	0.058	0.060
29-Feb-2016	11:04:54	0.065	0.062
29-Feb-2016	11:08:54	0.064	0.063
29-Feb-2016	11:12:54	0.060	0.062
29-Feb-2016	11:16:54	0.063	0.062
29-Feb-2016	11:20:54	0.062	0.062
29-Feb-2016	11:24:54	0.062	0.062
29-Feb-2016	11:28:54	0.062	0.062
29-Feb-2016	11:32:54	0.063	0.062
29-Feb-2016	11:36:54	0.062	0.062
29-Feb-2016	11:40:54	0.062	0.062
29-Feb-2016	11:44:54	0.062	0.062
29-Feb-2016	11:48:54	0.062	0.062
29-Feb-2016	11:52:54	0.062	0.062
29-Feb-2016	11:56:54	0.062	0.062
29-Feb-2016	12:00:54	0.063	0.062
29-Feb-2016	12:04:54	0.061	0.062
29-Feb-2016	12:08:54	0.061	0.063
29-Feb-2016	12:12:54	0.066	0.064

DUST MONITORING

February 2016

shading indicates values over the threshold

Monitor: 3

Threshold: 0.15 (mg/m^3)

Date	Time	Value (mg/m^3)	TWA (mg/m^3)
29-Feb-2016	12:16:54	0.065	0.065
29-Feb-2016	12:20:54	0.064	0.064
29-Feb-2016	12:24:54	0.064	0.065
29-Feb-2016	12:28:54	0.066	0.065
29-Feb-2016	12:32:54	0.065	0.065
29-Feb-2016	12:36:54	0.065	0.065
29-Feb-2016	12:40:54	0.064	0.066
29-Feb-2016	12:44:54	0.068	0.066
29-Feb-2016	12:48:54	0.066	0.066
29-Feb-2016	12:52:54	0.064	0.065
29-Feb-2016	12:56:54	0.066	0.065
29-Feb-2016	13:00:54	0.065	0.065
29-Feb-2016	13:04:54	0.065	0.065
29-Feb-2016	13:08:54	0.065	0.065
29-Feb-2016	13:12:54	0.066	0.067
29-Feb-2016	13:16:54	0.071	0.068
29-Feb-2016	13:20:54	0.067	0.068
29-Feb-2016	13:24:54	0.065	0.066
29-Feb-2016	13:28:54	0.067	0.068
29-Feb-2016	13:32:54	0.071	0.069
29-Feb-2016	13:36:54	0.069	0.070
29-Feb-2016	13:40:54	0.071	0.071
29-Feb-2016	13:44:54	0.073	0.071
29-Feb-2016	13:48:54	0.069	0.070
29-Feb-2016	13:52:54	0.067	0.068
29-Feb-2016	13:56:54	0.069	0.067
29-Feb-2016	14:00:54	0.066	0.068
29-Feb-2016	14:04:54	0.068	0.066
29-Feb-2016	14:08:54	0.064	0.065
29-Feb-2016	14:12:54	0.064	0.065
29-Feb-2016	14:16:54	0.066	0.065
29-Feb-2016	14:20:54	0.065	0.066
29-Feb-2016	14:24:54	0.067	0.068
29-Feb-2016	14:28:54	0.071	0.067
29-Feb-2016	14:32:54	0.064	0.067
29-Feb-2016	14:36:54	0.066	0.065
29-Feb-2016	14:40:54	0.066	0.069
29-Feb-2016	14:44:54	0.075	0.068
29-Feb-2016	14:48:54	0.063	0.067
29-Feb-2016	14:52:54	0.064	0.064
29-Feb-2016	14:56:54	0.065	0.065

DUST MONITORING

February 2016

shading indicates values over the threshold

Monitor: 3

Threshold: 0.15 (mg/m^3)

Date	Time	Value (mg/m^3)	TWA (mg/m^3)
29-Feb-2016	15:00:54	0.066	0.065
29-Feb-2016	15:04:54	0.065	0.067
29-Feb-2016	15:08:54	0.069	0.068
29-Feb-2016	15:12:54	0.069	0.068
29-Feb-2016	15:16:54	0.067	0.067
29-Feb-2016	15:20:54	0.066	0.067
29-Feb-2016	15:24:54	0.067	0.068
29-Feb-2016	15:28:54	0.070	0.068
29-Feb-2016	15:32:54	0.066	0.067
29-Feb-2016	15:36:54	0.066	0.066
29-Feb-2016	15:40:54	0.066	0.066
29-Feb-2016	15:44:54	0.066	0.067
29-Feb-2016	15:48:54	0.068	0.067
29-Feb-2016	15:52:54	0.068	0.068
29-Feb-2016	15:56:54	0.068	0.068
29-Feb-2016	16:00:54	0.069	0.068
29-Feb-2016	16:04:54	0.068	0.069
29-Feb-2016	16:08:54	0.069	0.069

DUST MONITORING

March 2016

shading indicates values over the threshold

Monitor: 1

Threshold: 0.15 (mg/m^3)

Date	Time	Value (mg/m^3)	TWA (mg/m^3)
7-Mar-2016	09:25:43	0.030	0.040
7-Mar-2016	09:29:43	0.050	0.030
7-Mar-2016	09:33:43	0.011	0.036
7-Mar-2016	09:37:43	0.046	0.025
7-Mar-2016	09:41:43	0.018	0.028
7-Mar-2016	09:45:43	0.019	0.038
7-Mar-2016	09:49:43	0.076	0.033
7-Mar-2016	09:53:43	0.003	0.050
7-Mar-2016	09:57:43	0.070	0.030
7-Mar-2016	10:01:43	0.016	0.031
7-Mar-2016	10:05:43	0.006	0.033
7-Mar-2016	10:09:43	0.078	0.050
7-Mar-2016	10:13:43	0.066	0.050
7-Mar-2016	10:17:43	0.007	0.032
7-Mar-2016	10:21:43	0.024	0.037
7-Mar-2016	10:25:43	0.081	0.057
7-Mar-2016	10:29:43	0.067	0.061
7-Mar-2016	10:33:43	0.035	0.056
7-Mar-2016	10:37:43	0.065	0.047
7-Mar-2016	10:41:43	0.041	0.042
7-Mar-2016	10:45:43	0.019	0.051
7-Mar-2016	10:49:43	0.092	0.089
7-Mar-2016	10:53:43	0.156	0.083
7-Mar-2016	10:57:43	0.001	0.088
7-Mar-2016	11:01:43	0.106	0.038
7-Mar-2016	11:05:43	0.008	0.039
7-Mar-2016	11:09:43	0.002	0.010
7-Mar-2016	11:13:43	0.019	0.028
7-Mar-2016	11:17:43	0.063	0.038
7-Mar-2016	11:21:43	0.033	0.051
7-Mar-2016	11:25:43	0.056	0.042
7-Mar-2016	11:29:43	0.037	0.133
7-Mar-2016	11:33:43	0.306	0.122
7-Mar-2016	11:37:43	0.022	0.156
7-Mar-2016	11:41:43	0.140	0.055
7-Mar-2016	11:45:43	0.002	0.060
7-Mar-2016	11:49:43	0.037	0.020
7-Mar-2016	11:53:43	0.021	0.019
7-Mar-2016	11:57:43	0.000	0.007
7-Mar-2016	12:01:43	0.000	0.005
7-Mar-2016	12:05:43	0.016	0.005

DUST MONITORING

March 2016

shading indicates values over the threshold

Monitor: 1

Threshold: 0.15 (mg/m^3)

Date	Time	Value (mg/m^3)	TWA (mg/m^3)
7-Mar-2016	12:09:43	0.000	0.057
7-Mar-2016	12:13:43	0.154	0.055
7-Mar-2016	12:17:43	0.011	0.059
7-Mar-2016	12:21:43	0.011	0.007
7-Mar-2016	12:25:43	0.000	0.006
7-Mar-2016	12:29:43	0.007	0.005
7-Mar-2016	12:33:43	0.009	0.005
7-Mar-2016	12:37:43	0.000	0.013
7-Mar-2016	12:41:43	0.030	0.053
7-Mar-2016	12:45:43	0.128	0.053
7-Mar-2016	12:49:43	0.000	0.043
7-Mar-2016	12:53:43	0.000	0.017
7-Mar-2016	12:57:43	0.052	0.021
7-Mar-2016	13:01:43	0.010	0.021
7-Mar-2016	13:05:43	0.001	0.018
7-Mar-2016	13:09:43	0.044	0.017
7-Mar-2016	13:13:43	0.005	0.071
7-Mar-2016	13:17:43	0.163	0.056
7-Mar-2016	13:21:43	0.000	0.200
7-Mar-2016	13:25:43	0.436	0.328
7-Mar-2016	13:29:43	0.548	0.435
7-Mar-2016	13:33:43	0.320	1.080
7-Mar-2016	13:37:43	2.371	0.902
7-Mar-2016	13:41:43	0.015	0.817
7-Mar-2016	13:45:43	0.064	0.066
7-Mar-2016	13:49:43	0.118	0.086
7-Mar-2016	13:53:43	0.077	0.080
7-Mar-2016	13:57:43	0.045	0.058
7-Mar-2016	14:01:43	0.052	0.065
7-Mar-2016	14:05:43	0.097	0.272
7-Mar-2016	14:09:43	0.667	0.291
7-Mar-2016	14:13:43	0.108	0.277
7-Mar-2016	14:17:43	0.057	0.078
7-Mar-2016	14:21:43	0.069	0.125
7-Mar-2016	14:25:43	0.249	0.193
7-Mar-2016	14:29:43	0.262	0.230
7-Mar-2016	14:33:43	0.180	0.182
7-Mar-2016	14:37:43	0.104	0.132
7-Mar-2016	14:41:43	0.111	0.078
7-Mar-2016	14:45:43	0.019	0.169
7-Mar-2016	14:49:43	0.376	0.178

DUST MONITORING

March 2016

shading indicates values over the threshold

Monitor: 1

Threshold: 0.15 (mg/m^3)

Date	Time	Value (mg/m^3)	TWA (mg/m^3)
7-Mar-2016	14:53:43	0.140	0.185
7-Mar-2016	14:57:43	0.038	0.111
7-Mar-2016	15:01:43	0.154	0.115
7-Mar-2016	15:05:43	0.152	0.116
7-Mar-2016	15:09:43	0.042	0.139
7-Mar-2016	15:13:43	0.224	0.139
7-Mar-2016	15:17:43	0.151	0.268
7-Mar-2016	15:21:43	0.428	0.217
7-Mar-2016	15:25:43	0.072	0.190
7-Mar-2016	15:29:43	0.070	0.075
7-Mar-2016	15:33:43	0.082	0.109
7-Mar-2016	15:37:43	0.176	0.106
7-Mar-2016	15:41:43	0.061	0.106
7-Mar-2016	15:45:43	0.081	0.155
7-Mar-2016	15:49:43	0.323	0.176
7-Mar-2016	15:53:43	0.123	0.203
7-Mar-2016	15:57:43	0.163	0.144
7-Mar-2016	16:01:43	0.146	0.157
7-Mar-2016	16:05:43	0.162	0.162
7-Mar-2016	16:09:43	0.177	0.135
7-Mar-2016	16:13:43	0.066	0.118
7-Mar-2016	16:17:43	0.111	0.079
7-Mar-2016	16:21:43	0.061	0.073
7-Mar-2016	16:25:43	0.047	0.052
7-Mar-2016	16:29:43	0.048	0.057
7-Mar-2016	16:33:43	0.077	0.058
7-Mar-2016	16:37:43	0.048	0.057
7-Mar-2016	16:41:43	0.047	0.050
7-Mar-2016	16:45:43	0.056	0.048
7-Mar-2016	16:49:43	0.040	0.045
7-Mar-2016	16:53:43	0.039	0.040
7-Mar-2016	16:57:43	0.042	0.041
7-Mar-2016	17:01:43	0.043	0.043
7-Mar-2016	17:05:43	0.044	0.053
7-Mar-2016	17:09:43	0.073	0.054
7-Mar-2016	17:13:43	0.046	0.054
7-Mar-2016	17:17:43	0.044	0.044
7-Mar-2016	17:21:43	0.041	0.044
7-Mar-2016	17:25:43	0.046	0.046
7-Mar-2016	17:29:43	0.052	0.048
7-Mar-2016	17:33:43	0.047	0.047

DUST MONITORING

March 2016

shading indicates values over the threshold

Monitor: 1

Threshold: 0.15 (mg/m^3)

Date	Time	Value (mg/m^3)	TWA (mg/m^3)
7-Mar-2016	17:37:43	0.042	0.047
7-Mar-2016	17:41:43	0.051	0.046
7-Mar-2016	17:45:43	0.045	0.046
7-Mar-2016	17:49:43	0.043	0.044
7-Mar-2016	17:53:43	0.043	0.043
7-Mar-2016	17:57:43	0.044	0.043
7-Mar-2016	18:01:43	0.043	0.044
7-Mar-2016	18:05:43	0.044	0.043
7-Mar-2016	18:09:43	0.043	0.043
7-Mar-2016	18:13:43	0.041	0.042
7-Mar-2016	18:17:43	0.041	0.041
7-Mar-2016	18:21:43	0.041	0.041
7-Mar-2016	18:25:43	0.041	0.041
7-Mar-2016	18:29:43	0.042	0.042
7-Mar-2016	18:33:43	0.042	0.042
7-Mar-2016	18:37:43	0.042	0.042
7-Mar-2016	18:41:43	0.042	0.042
7-Mar-2016	18:45:43	0.043	0.043
7-Mar-2016	18:49:43	0.044	0.044
7-Mar-2016	18:53:43	0.046	0.046
7-Mar-2016	18:57:43	0.047	0.046
7-Mar-2016	19:01:43	0.046	0.047
7-Mar-2016	19:05:43	0.047	0.047
7-Mar-2016	19:09:43	0.047	0.047
7-Mar-2016	19:13:43	0.047	0.047
7-Mar-2016	19:17:43	0.047	0.047
7-Mar-2016	19:21:43	0.047	0.047
7-Mar-2016	19:25:43	0.048	0.047
7-Mar-2016	19:29:43	0.047	0.048
7-Mar-2016	19:33:43	0.048	0.048
7-Mar-2016	19:37:43	0.048	0.049
7-Mar-2016	19:41:43	0.050	0.049
7-Mar-2016	19:45:43	0.048	0.048
7-Mar-2016	19:49:43	0.047	0.048
7-Mar-2016	19:53:43	0.048	0.047
7-Mar-2016	19:57:43	0.047	0.047
7-Mar-2016	20:01:43	0.047	0.047
7-Mar-2016	20:05:43	0.047	0.047
7-Mar-2016	20:09:43	0.047	0.047
7-Mar-2016	20:13:43	0.047	0.047
7-Mar-2016	20:17:43	0.047	0.047

DUST MONITORING

March 2016

shading indicates values over the threshold

Monitor: 1

Threshold: 0.15 (mg/m^3)

Date	Time	Value (mg/m^3)	TWA (mg/m^3)
7-Mar-2016	20:21:43	0.047	0.047
7-Mar-2016	20:25:43	0.047	0.047
7-Mar-2016	20:29:43	0.048	0.048
7-Mar-2016	20:33:43	0.048	0.048
7-Mar-2016	20:37:43	0.047	0.047
7-Mar-2016	20:41:43	0.047	0.047
7-Mar-2016	20:45:43	0.047	0.047
7-Mar-2016	20:49:43	0.048	0.048
7-Mar-2016	20:53:43	0.048	0.048
7-Mar-2016	20:57:43	0.048	0.048
7-Mar-2016	21:01:43	0.049	0.048
7-Mar-2016	21:05:43	0.048	0.049
7-Mar-2016	21:09:43	0.049	0.048
7-Mar-2016	21:13:43	0.048	0.048
7-Mar-2016	21:17:43	0.048	0.048
7-Mar-2016	21:21:43	0.049	0.048
7-Mar-2016	21:25:43	0.048	0.048
7-Mar-2016	21:29:43	0.048	0.048
7-Mar-2016	21:33:43	0.048	0.048
7-Mar-2016	21:37:43	0.048	0.049
7-Mar-2016	21:41:43	0.052	0.050
7-Mar-2016	21:45:43	0.051	0.051
7-Mar-2016	21:49:43	0.049	0.050
7-Mar-2016	21:53:43	0.051	0.050
7-Mar-2016	21:57:43	0.049	0.050
7-Mar-2016	22:01:43	0.049	0.049
7-Mar-2016	22:05:43	0.048	0.049
7-Mar-2016	22:09:43	0.049	0.049
7-Mar-2016	22:13:43	0.049	0.049
7-Mar-2016	22:17:43	0.049	0.049
7-Mar-2016	22:21:43	0.049	0.049
7-Mar-2016	22:25:43	0.049	0.049
7-Mar-2016	22:29:43	0.049	0.049
7-Mar-2016	22:33:43	0.049	0.049
7-Mar-2016	22:37:43	0.050	0.050
7-Mar-2016	22:41:43	0.050	0.050
7-Mar-2016	22:45:43	0.050	0.050
7-Mar-2016	22:49:43	0.050	0.050
7-Mar-2016	22:53:43	0.050	0.050
7-Mar-2016	22:57:43	0.051	0.051
7-Mar-2016	23:01:43	0.051	0.051

DUST MONITORING

March 2016

shading indicates values over the threshold

Monitor: 1

Threshold: 0.15 (mg/m^3)

Date	Time	Value (mg/m^3)	TWA (mg/m^3)
7-Mar-2016	23:05:43	0.051	0.051
7-Mar-2016	23:09:43	0.051	0.051
7-Mar-2016	23:13:43	0.051	0.051
7-Mar-2016	23:17:43	0.051	0.051
7-Mar-2016	23:21:43	0.052	0.052
7-Mar-2016	23:25:43	0.052	0.052
7-Mar-2016	23:29:43	0.052	0.052
7-Mar-2016	23:33:43	0.052	0.052
7-Mar-2016	23:37:43	0.052	0.052
7-Mar-2016	23:41:43	0.052	0.052
7-Mar-2016	23:45:43	0.053	0.053
7-Mar-2016	23:49:43	0.053	0.053
7-Mar-2016	23:53:43	0.053	0.053
7-Mar-2016	23:57:43	0.053	0.053
8-Mar-2016	00:01:43	0.053	0.053
8-Mar-2016	00:05:43	0.053	0.053
8-Mar-2016	00:09:43	0.054	0.053
8-Mar-2016	00:13:43	0.053	0.053
8-Mar-2016	00:17:43	0.053	0.053
8-Mar-2016	00:21:43	0.054	0.054
8-Mar-2016	00:25:43	0.054	0.054
8-Mar-2016	00:29:43	0.054	0.054
8-Mar-2016	00:33:43	0.054	0.054
8-Mar-2016	00:37:43	0.055	0.068
8-Mar-2016	08:29:49	0.096	0.082
8-Mar-2016	08:33:49	0.095	0.093
8-Mar-2016	08:37:49	0.089	0.091
8-Mar-2016	08:41:49	0.089	0.063
8-Mar-2016	08:45:49	0.010	0.036
8-Mar-2016	08:49:49	0.010	0.011
8-Mar-2016	08:53:49	0.012	0.026
8-Mar-2016	08:57:49	0.055	0.025
8-Mar-2016	09:01:49	0.007	0.028
8-Mar-2016	09:05:49	0.021	0.038
8-Mar-2016	09:09:49	0.087	0.056
8-Mar-2016	09:13:49	0.059	0.053
8-Mar-2016	09:17:49	0.013	0.056
8-Mar-2016	09:21:49	0.097	0.070
8-Mar-2016	09:25:49	0.099	0.098
8-Mar-2016	09:29:49	0.099	0.098
8-Mar-2016	09:33:49	0.097	0.066

DUST MONITORING

March 2016

shading indicates values over the threshold

Monitor: 1

Threshold: 0.15 (mg/m^3)

Date	Time	Value (mg/m^3)	TWA (mg/m^3)
8-Mar-2016	09:37:49	0.001	0.049
22-Mar-2016	07:58:17	0.012	0.009
22-Mar-2016	08:02:17	0.005	0.006
22-Mar-2016	08:06:17	0.000	0.002
22-Mar-2016	08:10:17	0.000	0.000
22-Mar-2016	08:14:17	0.000	0.000
22-Mar-2016	08:18:17	0.000	0.000
22-Mar-2016	08:22:17	0.000	0.000
22-Mar-2016	08:26:17	0.000	0.000
22-Mar-2016	08:30:17	0.000	0.000
22-Mar-2016	08:34:17	0.000	0.000
22-Mar-2016	08:38:17	0.000	0.000
22-Mar-2016	08:42:17	0.000	0.000
22-Mar-2016	08:46:17	0.000	0.000
22-Mar-2016	08:50:17	0.001	0.000
22-Mar-2016	08:54:17	0.000	0.000
22-Mar-2016	08:58:17	0.000	0.000
22-Mar-2016	09:02:17	0.000	0.000
22-Mar-2016	09:06:17	0.000	0.000
22-Mar-2016	09:10:17	0.000	0.000
22-Mar-2016	09:14:17	0.000	0.000
22-Mar-2016	09:18:17	0.000	0.000
22-Mar-2016	09:22:17	0.000	0.000
22-Mar-2016	09:26:17	0.000	0.000
22-Mar-2016	09:30:17	0.000	0.000
22-Mar-2016	09:34:17	0.000	0.000
22-Mar-2016	09:38:17	0.000	0.000
22-Mar-2016	09:42:17	0.000	0.000
22-Mar-2016	09:46:17	0.000	0.000
22-Mar-2016	09:50:17	0.000	0.000
22-Mar-2016	09:54:17	0.000	0.000
22-Mar-2016	09:58:17	0.000	0.000
22-Mar-2016	10:02:17	0.000	0.000
22-Mar-2016	10:06:17	0.000	0.000
22-Mar-2016	10:10:17	0.000	0.000
22-Mar-2016	10:14:17	0.000	0.000
22-Mar-2016	10:18:17	0.000	0.000
22-Mar-2016	10:22:17	0.000	0.000
22-Mar-2016	10:26:17	0.000	0.000
22-Mar-2016	10:30:17	0.000	0.000
22-Mar-2016	10:34:17	0.000	0.000

DUST MONITORING

March 2016

shading indicates values over the threshold

Monitor: 1

Threshold: 0.15 (mg/m^3)

Date	Time	Value (mg/m^3)	TWA (mg/m^3)
22-Mar-2016	10:38:17	0.000	0.000
22-Mar-2016	10:42:17	0.000	0.000
22-Mar-2016	10:46:17	0.000	0.000
22-Mar-2016	10:50:17	0.000	0.000
22-Mar-2016	10:54:17	0.000	0.000
22-Mar-2016	10:58:17	0.000	0.000
22-Mar-2016	11:02:17	0.000	0.000
22-Mar-2016	11:06:17	0.000	0.000
22-Mar-2016	11:10:17	0.001	0.000
22-Mar-2016	11:14:17	0.000	0.000
22-Mar-2016	11:18:17	0.000	0.000
22-Mar-2016	11:22:17	0.000	0.000
22-Mar-2016	11:26:17	0.000	0.000
22-Mar-2016	11:30:17	0.000	0.000
22-Mar-2016	11:34:17	0.000	0.000
22-Mar-2016	11:38:17	0.000	0.000
22-Mar-2016	11:42:17	0.000	0.000
22-Mar-2016	11:46:17	0.000	0.000
22-Mar-2016	11:50:17	0.000	0.000
22-Mar-2016	11:54:17	0.000	0.000
22-Mar-2016	11:58:17	0.000	0.000
22-Mar-2016	12:02:17	0.000	0.000
22-Mar-2016	12:06:17	0.000	0.000
22-Mar-2016	12:10:17	0.001	0.001
22-Mar-2016	12:14:17	0.001	0.001
22-Mar-2016	12:18:17	0.000	0.000
22-Mar-2016	12:22:17	0.000	0.000
22-Mar-2016	12:26:17	0.000	0.000
22-Mar-2016	12:30:17	0.000	0.000
22-Mar-2016	12:34:17	0.000	0.000
22-Mar-2016	12:38:17	0.000	0.000
22-Mar-2016	12:42:17	0.001	0.000
22-Mar-2016	12:46:17	0.000	0.000
22-Mar-2016	12:50:17	0.000	0.002
22-Mar-2016	12:54:17	0.006	0.002
22-Mar-2016	12:58:17	0.000	0.002
22-Mar-2016	13:02:17	0.001	0.001
22-Mar-2016	13:06:17	0.001	0.001
22-Mar-2016	13:10:17	0.001	0.001
22-Mar-2016	13:14:17	0.000	0.001
22-Mar-2016	13:18:17	0.001	0.000

DUST MONITORING

March 2016

shading indicates values over the threshold

Monitor: 1

Threshold: 0.15 (mg/m^3)

Date	Time	Value (mg/m^3)	TWA (mg/m^3)
22-Mar-2016	13:22:17	0.000	0.001
22-Mar-2016	13:26:17	0.002	0.001
22-Mar-2016	13:30:17	0.001	0.001
22-Mar-2016	13:34:17	0.000	0.000
22-Mar-2016	13:38:17	0.000	0.000
22-Mar-2016	13:42:17	0.000	0.000
22-Mar-2016	13:46:17	0.000	0.000
22-Mar-2016	13:50:17	0.001	0.000
22-Mar-2016	13:54:17	0.000	0.000
22-Mar-2016	13:58:17	0.000	0.000
22-Mar-2016	14:02:17	0.000	0.001
22-Mar-2016	14:06:17	0.002	0.002
22-Mar-2016	14:10:17	0.003	0.002
22-Mar-2016	14:14:17	0.001	0.001
22-Mar-2016	14:18:17	0.000	0.001
22-Mar-2016	14:22:17	0.001	0.001
22-Mar-2016	14:26:17	0.002	0.001
22-Mar-2016	14:30:17	0.000	0.001
22-Mar-2016	14:34:17	0.000	0.000
22-Mar-2016	14:38:17	0.000	0.000
22-Mar-2016	14:42:17	0.000	0.000
22-Mar-2016	14:46:17	0.001	0.000
22-Mar-2016	14:50:17	0.000	0.001
23-Mar-2016	06:56:07	0.009	0.005
23-Mar-2016	07:00:07	0.000	0.003
23-Mar-2016	07:04:07	0.000	0.000
23-Mar-2016	07:08:07	0.000	0.000
23-Mar-2016	07:12:07	0.000	0.000
23-Mar-2016	07:16:07	0.000	0.000
23-Mar-2016	07:20:07	0.000	0.000
23-Mar-2016	07:24:07	0.000	0.000
23-Mar-2016	07:28:07	0.000	0.000
23-Mar-2016	07:32:07	0.000	0.000
23-Mar-2016	07:36:07	0.000	0.000
23-Mar-2016	07:40:07	0.000	0.000
23-Mar-2016	07:44:07	0.000	0.000
23-Mar-2016	07:48:07	0.000	0.000
23-Mar-2016	07:52:07	0.000	0.000
23-Mar-2016	07:56:07	0.000	0.000
23-Mar-2016	08:00:07	0.000	0.000
23-Mar-2016	08:04:07	0.000	0.000

DUST MONITORING

March 2016

shading indicates values over the threshold

Monitor: 1

Threshold: 0.15 (mg/m^3)

Date	Time	Value (mg/m^3)	TWA (mg/m^3)
23-Mar-2016	08:08:07	0.000	0.000
23-Mar-2016	08:12:07	0.000	0.000
23-Mar-2016	08:16:07	0.000	0.000
23-Mar-2016	08:20:07	0.000	0.000
23-Mar-2016	08:24:07	0.000	0.000
23-Mar-2016	08:28:07	0.000	0.000
23-Mar-2016	08:32:07	0.000	0.000
23-Mar-2016	08:36:07	0.000	0.000
23-Mar-2016	08:40:07	0.000	0.000
23-Mar-2016	08:44:07	0.000	0.000
23-Mar-2016	08:48:07	0.001	0.000
23-Mar-2016	08:52:07	0.000	0.000
23-Mar-2016	08:56:07	0.000	0.000
23-Mar-2016	09:00:07	0.000	0.000
23-Mar-2016	09:04:07	0.000	0.000
23-Mar-2016	09:08:07	0.000	0.000
23-Mar-2016	09:12:07	0.000	0.000
23-Mar-2016	09:16:07	0.000	0.000
23-Mar-2016	09:20:07	0.000	0.000
23-Mar-2016	09:24:07	0.000	0.000
23-Mar-2016	09:28:07	0.000	0.000
23-Mar-2016	09:32:07	0.000	0.000
23-Mar-2016	09:36:07	0.000	0.000
23-Mar-2016	09:40:07	0.000	0.000
23-Mar-2016	09:44:07	0.000	0.000
23-Mar-2016	09:48:07	0.000	0.000
23-Mar-2016	09:52:07	0.000	0.000
23-Mar-2016	09:56:07	0.001	0.000
23-Mar-2016	10:00:07	0.000	0.000
23-Mar-2016	10:04:07	0.000	0.000
23-Mar-2016	10:08:07	0.000	0.000
23-Mar-2016	10:12:07	0.000	0.000
23-Mar-2016	10:16:07	0.000	0.000
23-Mar-2016	10:20:07	0.000	0.000
23-Mar-2016	10:24:07	0.000	0.000
23-Mar-2016	10:28:07	0.000	0.000
23-Mar-2016	10:32:07	0.001	0.001
23-Mar-2016	10:36:07	0.001	0.001
23-Mar-2016	10:40:07	0.000	0.000
23-Mar-2016	10:44:07	0.000	0.000
23-Mar-2016	10:48:07	0.000	0.000

DUST MONITORING

March 2016

shading indicates values over the threshold

Monitor: 1

Threshold: 0.15 (mg/m^3)

Date	Time	Value (mg/m^3)	TWA (mg/m^3)
23-Mar-2016	10:52:07	0.000	0.000
23-Mar-2016	10:56:07	0.000	0.000
23-Mar-2016	11:00:07	0.000	0.001
23-Mar-2016	11:04:07	0.002	0.001
23-Mar-2016	11:08:07	0.000	0.001
23-Mar-2016	11:12:07	0.000	0.000
23-Mar-2016	11:16:07	0.000	0.000
23-Mar-2016	11:20:07	0.000	0.000
23-Mar-2016	11:24:07	0.000	0.000
23-Mar-2016	11:28:07	0.000	0.000
23-Mar-2016	11:32:07	0.000	0.000
23-Mar-2016	11:36:07	0.000	0.000
23-Mar-2016	11:40:07	0.000	0.000
23-Mar-2016	11:44:07	0.000	0.000
23-Mar-2016	11:48:07	0.000	0.000
23-Mar-2016	11:52:07	0.000	0.000
23-Mar-2016	11:56:07	0.001	0.000
23-Mar-2016	12:00:07	0.000	0.001
23-Mar-2016	12:04:07	0.002	0.001
23-Mar-2016	12:08:07	0.001	0.001
23-Mar-2016	12:12:07	0.000	0.000
23-Mar-2016	12:16:07	0.000	0.000
23-Mar-2016	12:20:07	0.001	0.000
23-Mar-2016	12:24:07	0.000	0.001
23-Mar-2016	12:28:07	0.001	0.001
23-Mar-2016	12:32:07	0.001	0.001
23-Mar-2016	12:36:07	0.000	0.001
23-Mar-2016	12:40:07	0.001	0.000
23-Mar-2016	12:44:07	0.000	0.000
23-Mar-2016	12:48:07	0.000	0.000
23-Mar-2016	12:52:07	0.001	0.000
23-Mar-2016	12:56:07	0.000	0.000
23-Mar-2016	13:00:07	0.000	0.000
23-Mar-2016	13:04:07	0.001	0.001
23-Mar-2016	13:08:07	0.001	0.001
23-Mar-2016	13:12:07	0.000	0.000
23-Mar-2016	13:16:07	0.000	0.001
23-Mar-2016	13:20:07	0.002	0.001
23-Mar-2016	13:24:07	0.000	0.001
23-Mar-2016	13:28:07	0.000	0.000
23-Mar-2016	13:32:07	0.000	0.000

DUST MONITORING

March 2016

shading indicates values over the threshold

Monitor: 1

Threshold: 0.15 (mg/m^3)

Date	Time	Value (mg/m^3)	TWA (mg/m^3)
23-Mar-2016	13:36:07	0.000	0.000
23-Mar-2016	13:40:07	0.000	0.000
23-Mar-2016	13:44:07	0.000	0.000
23-Mar-2016	13:48:07	0.001	0.000
23-Mar-2016	13:52:07	0.000	0.001
23-Mar-2016	13:56:07	0.001	0.001
23-Mar-2016	14:00:07	0.001	0.001
23-Mar-2016	14:04:07	0.000	0.001
23-Mar-2016	14:08:07	0.002	0.001
23-Mar-2016	14:12:07	0.002	0.001
23-Mar-2016	14:16:07	0.000	0.001
23-Mar-2016	14:20:07	0.000	0.001
23-Mar-2016	14:24:07	0.002	0.001
23-Mar-2016	14:28:07	0.001	0.002
23-Mar-2016	14:32:07	0.002	0.001
23-Mar-2016	14:36:07	0.000	0.001
23-Mar-2016	14:40:07	0.001	0.000
23-Mar-2016	14:44:07	0.000	0.001
23-Mar-2016	14:48:07	0.003	0.001
23-Mar-2016	14:52:07	0.000	0.001
23-Mar-2016	14:56:07	0.001	0.000
23-Mar-2016	15:00:07	0.000	0.000
23-Mar-2016	15:04:07	0.000	0.000
23-Mar-2016	15:08:07	0.000	0.001
23-Mar-2016	15:12:07	0.003	0.001
23-Mar-2016	15:16:07	0.001	0.002
23-Mar-2016	15:20:07	0.001	0.001
23-Mar-2016	15:24:07	0.002	0.001
23-Mar-2016	15:28:07	0.000	0.001
23-Mar-2016	15:32:07	0.000	0.000
23-Mar-2016	15:36:07	0.001	0.000
23-Mar-2016	15:40:07	0.000	0.000
23-Mar-2016	15:44:07	0.000	0.000
23-Mar-2016	15:48:07	0.000	0.001
23-Mar-2016	15:52:07	0.002	0.001
23-Mar-2016	15:56:07	0.001	0.001
23-Mar-2016	16:00:07	0.000	0.000
23-Mar-2016	16:04:07	0.000	0.000
23-Mar-2016	16:08:07	0.000	0.000
23-Mar-2016	16:12:07	0.001	0.001
24-Mar-2016	07:30:47	0.001	0.001

DUST MONITORING

March 2016

shading indicates values over the threshold

Monitor: 1

Threshold: 0.15 (mg/m^3)

Date	Time	Value (mg/m^3)	TWA (mg/m^3)
24-Mar-2016	07:34:47	0.000	0.000
24-Mar-2016	07:38:47	0.000	0.001
24-Mar-2016	07:42:47	0.002	0.001
24-Mar-2016	07:46:47	0.000	0.001
24-Mar-2016	07:50:47	0.001	0.000
24-Mar-2016	07:54:47	0.000	0.001
24-Mar-2016	07:58:47	0.003	0.001
24-Mar-2016	08:02:47	0.001	0.002
24-Mar-2016	08:06:47	0.001	0.001
24-Mar-2016	08:10:47	0.000	0.001
24-Mar-2016	08:14:47	0.001	0.005
24-Mar-2016	08:18:47	0.013	0.005
24-Mar-2016	08:22:47	0.001	0.006
24-Mar-2016	08:26:47	0.003	0.002
29-Mar-2016	10:06:15	0.006	0.010
29-Mar-2016	10:10:15	0.013	0.006
29-Mar-2016	10:14:15	0.000	0.005
29-Mar-2016	10:18:15	0.001	0.002
29-Mar-2016	10:22:15	0.004	0.002
29-Mar-2016	10:26:15	0.002	0.004
29-Mar-2016	10:30:15	0.005	0.002
29-Mar-2016	10:34:15	0.000	0.002
29-Mar-2016	10:38:15	0.001	0.001
29-Mar-2016	10:42:15	0.002	0.001
29-Mar-2016	10:46:15	0.000	0.001
29-Mar-2016	10:50:15	0.000	0.000
29-Mar-2016	10:54:15	0.000	0.000
29-Mar-2016	10:58:15	0.000	0.000
29-Mar-2016	11:02:15	0.000	0.001
29-Mar-2016	11:06:15	0.003	0.001
29-Mar-2016	11:10:15	0.000	0.001
29-Mar-2016	11:14:15	0.000	0.000
29-Mar-2016	11:18:15	0.001	0.001
29-Mar-2016	11:22:15	0.001	0.001
29-Mar-2016	11:26:15	0.001	0.001
29-Mar-2016	11:30:15	0.000	0.000
29-Mar-2016	11:34:15	0.000	0.000
29-Mar-2016	11:38:15	0.000	0.000
29-Mar-2016	11:42:15	0.001	0.001
29-Mar-2016	11:46:15	0.003	0.002
29-Mar-2016	11:50:15	0.002	0.002

DUST MONITORING

March 2016

shading indicates values over the threshold

Monitor: 1

Threshold: 0.15 (mg/m^3)

Date	Time	Value (mg/m^3)	TWA (mg/m^3)
29-Mar-2016	11:54:15	0.002	0.002
29-Mar-2016	11:58:15	0.002	0.002
29-Mar-2016	12:02:15	0.003	0.002
29-Mar-2016	12:06:15	0.000	0.001
29-Mar-2016	12:10:15	0.000	0.001
29-Mar-2016	12:14:15	0.002	0.001
29-Mar-2016	12:18:15	0.001	0.001
29-Mar-2016	12:22:15	0.001	0.001
29-Mar-2016	12:26:15	0.000	0.000
29-Mar-2016	12:30:15	0.000	0.001
29-Mar-2016	12:34:15	0.002	0.001
29-Mar-2016	12:38:15	0.000	0.001
29-Mar-2016	12:42:15	0.000	0.000
29-Mar-2016	12:46:15	0.000	0.000
29-Mar-2016	12:50:15	0.000	0.000
29-Mar-2016	12:54:15	0.000	0.000
29-Mar-2016	12:58:15	0.000	0.000
29-Mar-2016	13:02:15	0.000	0.001
29-Mar-2016	13:06:15	0.003	0.001
29-Mar-2016	13:10:15	0.000	0.001
29-Mar-2016	13:14:15	0.000	0.000
29-Mar-2016	13:18:15	0.000	0.000
29-Mar-2016	13:22:15	0.000	0.000
29-Mar-2016	13:26:15	0.001	0.001
29-Mar-2016	13:30:15	0.003	0.002
29-Mar-2016	13:34:15	0.001	0.002
29-Mar-2016	13:38:15	0.001	0.001
29-Mar-2016	13:42:15	0.001	0.001
29-Mar-2016	13:46:15	0.001	0.001
29-Mar-2016	13:50:15	0.000	0.001
29-Mar-2016	13:54:15	0.002	0.003
29-Mar-2016	13:58:15	0.006	0.003
29-Mar-2016	14:02:15	0.001	0.002
29-Mar-2016	14:06:15	0.000	0.000
29-Mar-2016	14:10:15	0.000	0.000
29-Mar-2016	14:14:15	0.000	0.000
29-Mar-2016	14:18:15	0.000	0.001
29-Mar-2016	14:22:15	0.002	0.002
29-Mar-2016	14:26:15	0.003	0.002
29-Mar-2016	14:30:15	0.002	0.002
29-Mar-2016	14:34:15	0.001	0.001

DUST MONITORING

March 2016

shading indicates values over the threshold

Monitor: 1

Threshold: 0.15 (mg/m^3)

Date	Time	Value (mg/m^3)	TWA (mg/m^3)
29-Mar-2016	14:38:15	0.001	0.001
29-Mar-2016	14:42:15	0.001	0.002
29-Mar-2016	14:46:15	0.003	0.001
29-Mar-2016	14:50:15	0.000	0.001
29-Mar-2016	14:54:15	0.001	0.001
29-Mar-2016	14:58:15	0.001	0.001
29-Mar-2016	15:02:15	0.000	0.000
29-Mar-2016	15:06:15	0.000	0.000
29-Mar-2016	15:10:15	0.000	0.000
29-Mar-2016	15:14:15	0.000	0.000
29-Mar-2016	15:18:15	0.000	0.000
29-Mar-2016	15:22:15	0.000	0.001
29-Mar-2016	15:26:15	0.003	0.001
29-Mar-2016	15:30:15	0.000	0.001
29-Mar-2016	15:34:15	0.000	0.000
29-Mar-2016	15:38:15	0.000	0.000
29-Mar-2016	15:42:15	0.000	0.000
29-Mar-2016	15:46:15	0.000	0.000
29-Mar-2016	15:50:15	0.000	0.000
29-Mar-2016	15:54:15	0.000	0.000
29-Mar-2016	15:58:15	0.000	0.000
29-Mar-2016	16:02:15	0.000	0.000
29-Mar-2016	16:06:15	0.000	0.000
29-Mar-2016	16:10:15	0.000	0.000
29-Mar-2016	16:14:15	0.000	0.000
29-Mar-2016	16:18:15	0.000	0.000
29-Mar-2016	16:22:15	0.000	0.000
29-Mar-2016	16:26:15	0.000	0.000
29-Mar-2016	16:30:15	0.000	0.000
29-Mar-2016	16:34:15	0.000	0.000
29-Mar-2016	16:38:15	0.000	0.000
29-Mar-2016	16:42:15	0.001	0.000
29-Mar-2016	16:46:15	0.000	0.000
29-Mar-2016	16:50:15	0.000	0.000
29-Mar-2016	16:54:15	0.000	0.000
29-Mar-2016	16:58:15	0.000	0.000
29-Mar-2016	17:02:15	0.000	0.000
29-Mar-2016	17:06:15	0.000	0.000
29-Mar-2016	17:10:15	0.000	0.000
29-Mar-2016	17:14:15	0.000	0.000
29-Mar-2016	17:18:15	0.000	0.000

DUST MONITORING

March 2016

shading indicates values over the threshold

Monitor: 1

Threshold: 0.15 (mg/m^3)

Date	Time	Value (mg/m^3)	TWA (mg/m^3)
29-Mar-2016	17:22:15	0.000	0.000
29-Mar-2016	17:26:15	0.000	0.000
29-Mar-2016	17:30:15	0.000	0.000
29-Mar-2016	17:34:15	0.000	0.000
29-Mar-2016	17:38:15	0.000	0.000
29-Mar-2016	17:42:15	0.000	0.000
29-Mar-2016	17:46:15	0.000	0.000
29-Mar-2016	17:50:15	0.000	0.000
29-Mar-2016	17:54:15	0.000	0.000
29-Mar-2016	17:58:15	0.000	0.000
29-Mar-2016	18:02:15	0.000	0.000
29-Mar-2016	18:06:15	0.000	0.000
29-Mar-2016	18:10:15	0.000	0.000
29-Mar-2016	18:14:15	0.000	0.000
29-Mar-2016	18:18:15	0.000	0.000
29-Mar-2016	18:22:15	0.000	0.000
29-Mar-2016	18:26:15	0.000	0.000
29-Mar-2016	18:30:15	0.000	0.002
29-Mar-2016	18:34:15	0.005	0.002
29-Mar-2016	18:38:15	0.000	0.002
29-Mar-2016	18:42:15	0.000	0.000
29-Mar-2016	18:46:15	0.000	0.000
29-Mar-2016	18:50:15	0.000	0.000
29-Mar-2016	18:54:15	0.001	0.000
29-Mar-2016	18:58:15	0.000	0.000
29-Mar-2016	19:02:15	0.000	0.000
29-Mar-2016	19:06:15	0.000	0.000
29-Mar-2016	19:10:15	0.000	0.000
29-Mar-2016	19:14:15	0.000	0.000
29-Mar-2016	19:18:15	0.000	0.000
29-Mar-2016	19:22:15	0.000	0.000
29-Mar-2016	19:26:15	0.000	0.000
29-Mar-2016	19:30:15	0.000	0.000
29-Mar-2016	19:34:15	0.000	0.000
29-Mar-2016	19:38:15	0.000	0.000
29-Mar-2016	19:42:15	0.000	0.000
29-Mar-2016	19:46:15	0.001	0.000
29-Mar-2016	19:50:15	0.000	0.000
29-Mar-2016	19:54:15	0.000	0.001
29-Mar-2016	19:58:15	0.002	0.001
29-Mar-2016	20:02:15	0.000	0.001

DUST MONITORING

March 2016

shading indicates values over the threshold

Monitor: 1

Threshold: 0.15 (mg/m^3)

Date	Time	Value (mg/m^3)	TWA (mg/m^3)
29-Mar-2016	20:06:15	0.000	0.000
29-Mar-2016	20:10:15	0.000	0.000
29-Mar-2016	20:14:15	0.000	0.000
29-Mar-2016	20:18:15	0.000	0.000
29-Mar-2016	20:22:15	0.000	0.000
29-Mar-2016	20:26:15	0.000	0.000
29-Mar-2016	20:30:15	0.000	0.000
29-Mar-2016	20:34:15	0.000	0.000
29-Mar-2016	20:38:15	0.000	0.000
29-Mar-2016	20:42:15	0.000	0.000
29-Mar-2016	20:46:15	0.000	0.000
29-Mar-2016	20:50:15	0.000	0.000
29-Mar-2016	20:54:15	0.001	0.000
29-Mar-2016	20:58:15	0.000	0.001
29-Mar-2016	21:02:15	0.002	0.001
29-Mar-2016	21:06:15	0.000	0.001
29-Mar-2016	21:10:15	0.000	0.000
29-Mar-2016	21:14:15	0.000	0.000
29-Mar-2016	21:18:15	0.001	0.000
29-Mar-2016	21:22:15	0.000	0.001
29-Mar-2016	21:26:15	0.001	0.000
29-Mar-2016	21:30:15	0.000	0.000
29-Mar-2016	21:34:15	0.000	0.000
29-Mar-2016	21:38:15	0.000	0.000
29-Mar-2016	21:42:15	0.000	0.000
29-Mar-2016	21:46:15	0.000	0.000
29-Mar-2016	21:50:15	0.000	0.000
29-Mar-2016	21:54:15	0.000	0.000
29-Mar-2016	21:58:15	0.000	0.000
29-Mar-2016	22:02:15	0.000	0.000
29-Mar-2016	22:06:15	0.000	0.000
29-Mar-2016	22:10:15	0.000	0.001
29-Mar-2016	22:14:15	0.004	0.001
29-Mar-2016	22:18:15	0.000	0.001
29-Mar-2016	22:22:15	0.000	0.000
29-Mar-2016	22:26:15	0.001	0.000
29-Mar-2016	22:30:15	0.000	0.000
29-Mar-2016	22:34:15	0.000	0.000
29-Mar-2016	22:38:15	0.000	0.000
29-Mar-2016	22:42:15	0.000	0.000
29-Mar-2016	22:46:15	0.001	0.000

DUST MONITORING

March 2016

shading indicates values over the threshold

Monitor: 1

Threshold: 0.15 (mg/m^3)

Date	Time	Value (mg/m^3)	TWA (mg/m^3)
29-Mar-2016	22:50:15	0.000	0.000
29-Mar-2016	22:54:15	0.000	0.002
29-Mar-2016	22:58:15	0.005	0.003
29-Mar-2016	23:02:15	0.003	0.003
29-Mar-2016	23:06:15	0.002	0.002
29-Mar-2016	23:10:15	0.002	0.003
29-Mar-2016	23:14:15	0.006	0.005
29-Mar-2016	23:18:15	0.007	0.008
29-Mar-2016	23:22:15	0.010	0.009
29-Mar-2016	23:26:15	0.009	0.010
29-Mar-2016	23:30:15	0.011	0.011
29-Mar-2016	23:34:15	0.013	0.012
29-Mar-2016	23:38:15	0.011	0.012
29-Mar-2016	23:42:15	0.011	0.010
29-Mar-2016	23:46:15	0.008	0.007
29-Mar-2016	23:50:15	0.001	0.003
29-Mar-2016	23:54:15	0.000	0.001
29-Mar-2016	23:58:15	0.001	0.001
30-Mar-2016	00:02:15	0.000	0.001
30-Mar-2016	00:06:15	0.001	0.001
30-Mar-2016	00:10:15	0.002	0.001
30-Mar-2016	00:14:15	0.000	0.001
30-Mar-2016	00:18:15	0.000	0.000
30-Mar-2016	00:22:15	0.000	0.000
30-Mar-2016	00:26:15	0.001	0.000
30-Mar-2016	00:30:15	0.000	0.000
30-Mar-2016	00:34:15	0.000	0.000
30-Mar-2016	00:38:15	0.000	0.000
30-Mar-2016	00:42:15	0.000	0.000
30-Mar-2016	00:46:15	0.000	0.000
30-Mar-2016	00:50:15	0.000	0.001
30-Mar-2016	00:54:15	0.002	0.001
30-Mar-2016	00:58:15	0.000	0.001
30-Mar-2016	01:02:15	0.001	0.000
30-Mar-2016	01:06:15	0.000	0.000
30-Mar-2016	01:10:15	0.000	0.000
30-Mar-2016	01:14:15	0.001	0.001
30-Mar-2016	01:18:15	0.001	0.001
30-Mar-2016	01:22:15	0.000	0.000
30-Mar-2016	01:26:15	0.000	0.000
30-Mar-2016	01:30:15	0.001	0.001

DUST MONITORING

March 2016

shading indicates values over the threshold

Monitor: 1

Threshold: 0.15 (mg/m^3)

Date	Time	Value (mg/m^3)	TWA (mg/m^3)
30-Mar-2016	01:34:15	0.001	0.001
30-Mar-2016	01:38:15	0.000	0.000
30-Mar-2016	01:42:15	0.000	0.000
30-Mar-2016	01:46:15	0.000	0.000
30-Mar-2016	01:50:15	0.000	0.000
30-Mar-2016	06:59:43	0.000	0.000
30-Mar-2016	07:03:43	0.000	0.001
30-Mar-2016	07:07:43	0.004	0.001
30-Mar-2016	07:11:43	0.000	0.001
30-Mar-2016	07:15:43	0.000	0.000
30-Mar-2016	07:19:43	0.000	0.000
30-Mar-2016	07:23:43	0.000	0.000
30-Mar-2016	07:27:43	0.000	0.000
30-Mar-2016	07:31:43	0.000	0.000
30-Mar-2016	07:35:43	0.001	0.001
30-Mar-2016	07:39:43	0.001	0.001
30-Mar-2016	07:43:43	0.000	0.000
30-Mar-2016	07:47:43	0.000	0.000
30-Mar-2016	07:51:43	0.001	0.000
30-Mar-2016	07:55:43	0.000	0.000
30-Mar-2016	07:59:43	0.000	0.000
30-Mar-2016	08:03:43	0.000	0.000
30-Mar-2016	08:07:43	0.001	0.000
30-Mar-2016	08:11:43	0.000	0.001
30-Mar-2016	08:15:43	0.001	0.000
30-Mar-2016	08:19:43	0.000	0.001
30-Mar-2016	08:23:43	0.001	0.000
30-Mar-2016	08:27:43	0.000	0.002
30-Mar-2016	08:31:43	0.004	0.003
30-Mar-2016	08:35:43	0.004	0.003
30-Mar-2016	08:39:43	0.000	0.002
30-Mar-2016	08:43:43	0.001	0.001
30-Mar-2016	08:47:43	0.002	0.003
30-Mar-2016	08:51:43	0.005	0.003
30-Mar-2016	08:55:43	0.002	0.004
30-Mar-2016	08:59:43	0.005	0.004
30-Mar-2016	09:03:43	0.006	0.005
30-Mar-2016	09:07:43	0.005	0.005
30-Mar-2016	09:11:43	0.004	0.004
30-Mar-2016	09:15:43	0.004	0.003
30-Mar-2016	09:19:43	0.001	0.005

DUST MONITORING

March 2016

shading indicates values over the threshold

Monitor: 1

Threshold: 0.15 (mg/m^3)

Date	Time	Value (mg/m^3)	TWA (mg/m^3)
30-Mar-2016	09:23:43	0.011	0.005
30-Mar-2016	09:27:43	0.002	0.005
30-Mar-2016	09:31:43	0.003	0.003
30-Mar-2016	09:35:43	0.003	0.003
30-Mar-2016	09:39:43	0.003	0.004
30-Mar-2016	09:43:43	0.007	0.004
30-Mar-2016	09:47:43	0.003	0.004
30-Mar-2016	09:51:43	0.003	0.003
30-Mar-2016	09:55:43	0.002	0.006
30-Mar-2016	09:59:43	0.013	0.006
30-Mar-2016	10:03:43	0.003	0.007
30-Mar-2016	10:07:43	0.006	0.004
30-Mar-2016	10:11:43	0.003	0.005
30-Mar-2016	10:15:43	0.005	0.005
30-Mar-2016	10:19:43	0.008	0.006
30-Mar-2016	10:23:43	0.006	0.007
30-Mar-2016	10:27:43	0.008	0.007
30-Mar-2016	10:31:43	0.007	0.007
30-Mar-2016	10:35:43	0.006	0.005
30-Mar-2016	10:39:43	0.003	0.005
30-Mar-2016	10:43:43	0.007	0.004
30-Mar-2016	10:47:43	0.002	0.003
30-Mar-2016	10:51:43	0.001	0.003
30-Mar-2016	10:55:43	0.006	0.003
30-Mar-2016	10:59:43	0.002	0.003
30-Mar-2016	11:03:43	0.001	0.001
30-Mar-2016	11:07:43	0.000	0.002
30-Mar-2016	11:11:43	0.006	0.003
30-Mar-2016	11:15:43	0.004	0.007
30-Mar-2016	11:19:43	0.010	0.005
30-Mar-2016	11:23:43	0.001	0.005
30-Mar-2016	11:27:43	0.004	0.003
30-Mar-2016	11:31:43	0.004	0.006
30-Mar-2016	11:35:43	0.011	0.011
30-Mar-2016	11:39:43	0.019	0.020
30-Mar-2016	11:43:43	0.029	0.026
30-Mar-2016	11:47:43	0.029	0.020
30-Mar-2016	11:51:43	0.003	0.012
30-Mar-2016	11:55:43	0.004	0.006
30-Mar-2016	11:59:43	0.011	0.006
30-Mar-2016	12:03:43	0.003	0.005

DUST MONITORING

March 2016

shading indicates values over the threshold

Monitor: 1

Threshold: 0.15 (mg/m^3)

Date	Time	Value (mg/m^3)	TWA (mg/m^3)
30-Mar-2016	12:07:43	0.002	0.003
30-Mar-2016	12:11:43	0.004	0.003
30-Mar-2016	12:15:43	0.002	0.004
30-Mar-2016	12:19:43	0.007	0.004
30-Mar-2016	12:23:43	0.003	0.004
30-Mar-2016	12:27:43	0.003	0.003
30-Mar-2016	12:31:43	0.002	0.003
30-Mar-2016	12:35:43	0.003	0.002
30-Mar-2016	12:39:43	0.001	0.002
30-Mar-2016	12:43:43	0.001	0.004
30-Mar-2016	12:47:43	0.011	0.005
30-Mar-2016	12:51:43	0.003	0.005
30-Mar-2016	12:55:43	0.002	0.002
30-Mar-2016	12:59:43	0.001	0.002
30-Mar-2016	13:03:43	0.002	0.002
30-Mar-2016	13:07:43	0.002	0.003
30-Mar-2016	13:11:43	0.004	0.004
30-Mar-2016	13:15:43	0.005	0.006
30-Mar-2016	13:19:43	0.008	0.005
30-Mar-2016	13:23:43	0.003	0.005
30-Mar-2016	13:27:43	0.005	0.003
30-Mar-2016	13:31:43	0.002	0.004
30-Mar-2016	13:35:43	0.005	0.003
30-Mar-2016	13:39:43	0.001	0.003
30-Mar-2016	13:43:43	0.002	0.001
30-Mar-2016	13:47:43	0.001	0.001
30-Mar-2016	13:51:43	0.001	0.001
30-Mar-2016	13:55:43	0.002	0.002
30-Mar-2016	13:59:43	0.002	0.002
30-Mar-2016	14:03:43	0.003	0.002
30-Mar-2016	14:07:43	0.001	0.003
30-Mar-2016	14:11:43	0.005	0.004
30-Mar-2016	14:15:43	0.005	0.004
30-Mar-2016	14:19:43	0.002	0.003
30-Mar-2016	14:23:43	0.001	0.001
30-Mar-2016	14:27:43	0.000	0.001
30-Mar-2016	14:31:43	0.002	0.001
30-Mar-2016	14:35:43	0.002	0.001
30-Mar-2016	14:39:43	0.000	0.001
30-Mar-2016	14:43:43	0.000	0.001
30-Mar-2016	14:47:43	0.002	0.001

DUST MONITORING

March 2016

shading indicates values over the threshold

Monitor: 1

Threshold: 0.15 (mg/m^3)

Date	Time	Value (mg/m^3)	TWA (mg/m^3)
30-Mar-2016	14:51:43	0.002	0.003
30-Mar-2016	14:55:43	0.004	0.003
30-Mar-2016	14:59:43	0.003	0.004
30-Mar-2016	15:03:43	0.004	0.003
30-Mar-2016	15:07:43	0.002	0.003
30-Mar-2016	15:11:43	0.004	0.003
30-Mar-2016	15:15:43	0.002	0.002
30-Mar-2016	15:19:43	0.000	0.001
30-Mar-2016	15:23:43	0.000	0.000
30-Mar-2016	15:27:43	0.001	0.001
30-Mar-2016	15:31:43	0.002	0.001
30-Mar-2016	15:35:43	0.001	0.002
30-Mar-2016	15:39:43	0.004	0.002
30-Mar-2016	15:43:43	0.000	0.002
30-Mar-2016	15:47:43	0.002	0.001
30-Mar-2016	15:51:43	0.002	0.003
30-Mar-2016	15:55:43	0.005	0.003
30-Mar-2016	15:59:43	0.001	0.003
30-Mar-2016	16:03:43	0.002	0.001
30-Mar-2016	16:07:43	0.001	0.002
30-Mar-2016	16:11:43	0.003	0.002
30-Mar-2016	16:15:43	0.002	0.002
30-Mar-2016	16:19:43	0.000	0.001

DUST MONITORING

March 2016

shading indicates values over the threshold

Monitor: 2

Threshold: 0.15 (mg/m^3)

Date	Time	Value (mg/m^3)	TWA (mg/m^3)
7-Mar-2016	09:13:30	0.060	0.059
7-Mar-2016	09:17:30	0.058	0.059
7-Mar-2016	09:21:30	0.058	0.058
7-Mar-2016	09:25:30	0.059	0.059
7-Mar-2016	09:29:30	0.059	0.059
7-Mar-2016	09:33:30	0.060	0.059
7-Mar-2016	09:37:30	0.058	0.059
7-Mar-2016	09:41:30	0.059	0.058
7-Mar-2016	09:45:30	0.058	0.059
7-Mar-2016	09:49:30	0.060	0.059
7-Mar-2016	09:53:30	0.060	0.060
7-Mar-2016	09:57:30	0.061	0.060
7-Mar-2016	10:01:30	0.060	0.060
7-Mar-2016	10:05:30	0.060	0.060
7-Mar-2016	10:09:30	0.060	0.060
7-Mar-2016	10:13:30	0.059	0.060
7-Mar-2016	10:17:30	0.061	0.060
7-Mar-2016	10:21:30	0.060	0.060
7-Mar-2016	10:25:30	0.059	0.060
7-Mar-2016	10:29:30	0.060	0.060
7-Mar-2016	10:33:30	0.061	0.060
7-Mar-2016	10:37:30	0.060	0.060
7-Mar-2016	10:41:30	0.059	0.059
7-Mar-2016	10:45:30	0.059	0.059
7-Mar-2016	10:49:30	0.059	0.059
7-Mar-2016	10:53:30	0.059	0.059
7-Mar-2016	10:57:30	0.060	0.061
7-Mar-2016	11:01:30	0.063	0.061
7-Mar-2016	11:05:30	0.061	0.062
7-Mar-2016	11:09:30	0.061	0.061
7-Mar-2016	11:13:30	0.060	0.061
7-Mar-2016	11:17:30	0.062	0.063
7-Mar-2016	11:21:30	0.067	0.064
7-Mar-2016	11:25:30	0.062	0.063
7-Mar-2016	11:29:30	0.061	0.070
7-Mar-2016	11:33:30	0.086	0.088
7-Mar-2016	11:37:30	0.117	0.091
7-Mar-2016	11:41:30	0.070	0.086
7-Mar-2016	11:45:30	0.072	0.072
7-Mar-2016	11:49:30	0.073	0.076
7-Mar-2016	11:53:30	0.082	0.094

DUST MONITORING

March 2016

shading indicates values over the threshold

Monitor: 2

Threshold: 0.15 (mg/m^3)

Date	Time	Value (mg/m^3)	TWA (mg/m^3)
7-Mar-2016	11:57:30	0.126	0.093
7-Mar-2016	12:01:30	0.070	0.086
7-Mar-2016	12:05:30	0.062	0.064
7-Mar-2016	12:09:30	0.060	0.061
7-Mar-2016	12:13:30	0.060	0.060
7-Mar-2016	12:17:30	0.061	0.060
7-Mar-2016	12:21:30	0.058	0.059
7-Mar-2016	12:25:30	0.058	0.058
7-Mar-2016	12:29:30	0.058	0.060
7-Mar-2016	12:33:30	0.065	0.062
7-Mar-2016	12:37:30	0.062	0.062
7-Mar-2016	12:41:30	0.060	0.062
7-Mar-2016	12:45:30	0.063	0.062
7-Mar-2016	12:49:30	0.062	0.061
7-Mar-2016	12:53:30	0.059	0.064
7-Mar-2016	12:57:30	0.072	0.073
7-Mar-2016	13:01:30	0.087	0.078
7-Mar-2016	13:05:30	0.074	0.078
7-Mar-2016	13:09:30	0.074	0.079
7-Mar-2016	13:13:30	0.089	0.080
7-Mar-2016	13:17:30	0.076	0.081
7-Mar-2016	13:21:30	0.078	0.088
7-Mar-2016	13:25:30	0.109	0.088
7-Mar-2016	13:29:30	0.078	0.087
7-Mar-2016	13:33:30	0.073	0.071
7-Mar-2016	13:37:30	0.062	0.068
7-Mar-2016	13:41:30	0.070	0.080
7-Mar-2016	13:45:30	0.107	0.088
7-Mar-2016	13:49:30	0.088	0.091
7-Mar-2016	13:53:30	0.079	0.085
7-Mar-2016	13:57:30	0.088	0.076
7-Mar-2016	14:01:30	0.062	0.075
7-Mar-2016	14:05:30	0.074	0.076
7-Mar-2016	14:09:30	0.092	0.079
7-Mar-2016	14:13:30	0.072	0.084
7-Mar-2016	14:17:30	0.089	0.084
7-Mar-2016	14:21:30	0.090	0.084
7-Mar-2016	14:25:30	0.073	0.100
7-Mar-2016	14:29:30	0.138	0.095
7-Mar-2016	14:33:30	0.074	0.096
7-Mar-2016	14:37:30	0.076	0.070

DUST MONITORING

March 2016

shading indicates values over the threshold

Monitor: 2

Threshold: 0.15 (mg/m^3)

Date	Time	Value (mg/m^3)	TWA (mg/m^3)
7-Mar-2016	14:41:30	0.061	0.070
7-Mar-2016	14:45:30	0.074	0.069
7-Mar-2016	14:49:30	0.072	0.071
7-Mar-2016	14:53:30	0.067	0.076
7-Mar-2016	14:57:30	0.089	0.074
7-Mar-2016	15:01:30	0.067	0.095
7-Mar-2016	15:05:30	0.128	0.095
7-Mar-2016	15:09:30	0.090	0.101
7-Mar-2016	15:13:30	0.086	0.095
7-Mar-2016	15:17:30	0.110	0.089
7-Mar-2016	15:21:30	0.070	0.095
7-Mar-2016	15:25:30	0.106	0.093
7-Mar-2016	15:29:30	0.103	0.099
7-Mar-2016	15:33:30	0.088	0.096
7-Mar-2016	15:37:30	0.096	0.087
7-Mar-2016	15:41:30	0.076	0.091
7-Mar-2016	15:45:30	0.102	0.100
7-Mar-2016	15:49:30	0.121	0.100
7-Mar-2016	15:53:30	0.078	0.111
7-Mar-2016	15:57:30	0.133	0.095
7-Mar-2016	16:01:30	0.073	0.097
7-Mar-2016	16:05:30	0.086	0.078
7-Mar-2016	16:09:30	0.074	0.131
7-Mar-2016	16:13:30	0.233	0.137
7-Mar-2016	16:17:30	0.103	0.140
7-Mar-2016	16:21:30	0.085	0.093
7-Mar-2016	16:25:30	0.092	0.084
7-Mar-2016	16:29:30	0.075	0.081
7-Mar-2016	16:33:30	0.076	0.077
7-Mar-2016	16:37:30	0.081	0.078
7-Mar-2016	16:41:30	0.076	0.079
7-Mar-2016	16:45:30	0.080	0.076
7-Mar-2016	16:49:30	0.071	0.075
7-Mar-2016	16:53:30	0.075	0.078
7-Mar-2016	16:57:30	0.087	0.078
7-Mar-2016	17:01:30	0.072	0.078
7-Mar-2016	17:05:30	0.076	0.073
7-Mar-2016	17:09:30	0.071	0.073
7-Mar-2016	17:13:30	0.072	0.071
7-Mar-2016	17:17:30	0.069	0.070
7-Mar-2016	17:21:30	0.068	0.068

DUST MONITORING

March 2016

shading indicates values over the threshold

Monitor: 2

Threshold: 0.15 (mg/m^3)

Date	Time	Value (mg/m^3)	TWA (mg/m^3)
7-Mar-2016	17:25:30	0.067	0.068
7-Mar-2016	17:29:30	0.068	0.068
7-Mar-2016	17:33:30	0.069	0.068
7-Mar-2016	17:37:30	0.068	0.068
7-Mar-2016	17:41:30	0.066	0.067
7-Mar-2016	17:45:30	0.066	0.066
7-Mar-2016	17:49:30	0.067	0.067
7-Mar-2016	17:53:30	0.067	0.067
7-Mar-2016	17:57:30	0.067	0.067
7-Mar-2016	18:01:30	0.066	0.067
7-Mar-2016	18:05:30	0.067	0.066
7-Mar-2016	18:09:30	0.066	0.068
7-Mar-2016	18:13:30	0.070	0.068
7-Mar-2016	18:17:30	0.069	0.069
7-Mar-2016	18:21:30	0.069	0.069
7-Mar-2016	18:25:30	0.068	0.068
7-Mar-2016	18:29:30	0.068	0.067
7-Mar-2016	18:33:30	0.066	0.067
7-Mar-2016	18:37:30	0.066	0.066
7-Mar-2016	18:41:30	0.066	0.067
7-Mar-2016	18:45:30	0.068	0.067
7-Mar-2016	18:49:30	0.066	0.068
7-Mar-2016	18:53:30	0.069	0.068
7-Mar-2016	18:57:30	0.070	0.068
7-Mar-2016	19:01:30	0.066	0.067
7-Mar-2016	19:05:30	0.066	0.066
7-Mar-2016	19:09:30	0.067	0.067
7-Mar-2016	19:13:30	0.067	0.067
7-Mar-2016	19:17:30	0.067	0.067
7-Mar-2016	19:21:30	0.068	0.069
7-Mar-2016	19:25:30	0.071	0.070
7-Mar-2016	19:29:30	0.070	0.070
7-Mar-2016	19:33:30	0.070	0.069
7-Mar-2016	19:37:30	0.068	0.069
7-Mar-2016	19:41:30	0.068	0.068
7-Mar-2016	19:45:30	0.067	0.067
7-Mar-2016	19:49:30	0.067	0.067
7-Mar-2016	19:53:30	0.067	0.067
7-Mar-2016	19:57:30	0.067	0.067
7-Mar-2016	20:01:30	0.067	0.068
7-Mar-2016	20:05:30	0.070	0.069

DUST MONITORING

March 2016

shading indicates values over the threshold

Monitor: 2

Threshold: 0.15 (mg/m^3)

Date	Time	Value (mg/m^3)	TWA (mg/m^3)
7-Mar-2016	20:09:30	0.071	0.071
7-Mar-2016	20:13:30	0.072	0.071
7-Mar-2016	20:17:30	0.070	0.071
7-Mar-2016	20:21:30	0.070	0.069
7-Mar-2016	20:25:30	0.068	0.068
7-Mar-2016	20:29:30	0.067	0.067
7-Mar-2016	20:33:30	0.067	0.067
7-Mar-2016	20:37:30	0.066	0.066
7-Mar-2016	20:41:30	0.066	0.066
7-Mar-2016	20:45:30	0.066	0.066
7-Mar-2016	20:49:30	0.067	0.067
7-Mar-2016	20:53:30	0.067	0.067
7-Mar-2016	20:57:30	0.068	0.068
7-Mar-2016	21:01:30	0.069	0.069
7-Mar-2016	21:05:30	0.070	0.070
7-Mar-2016	21:09:30	0.070	0.069
7-Mar-2016	21:13:30	0.067	0.068
7-Mar-2016	21:17:30	0.068	0.068
7-Mar-2016	21:21:30	0.069	0.069
7-Mar-2016	21:25:30	0.070	0.070
8-Mar-2016	08:29:49	0.096	0.096
8-Mar-2016	08:33:49	0.095	0.093
8-Mar-2016	08:37:49	0.089	0.091
8-Mar-2016	08:41:49	0.089	0.090
8-Mar-2016	08:45:49	0.091	0.097
8-Mar-2016	08:49:49	0.110	0.138
8-Mar-2016	08:53:49	0.212	0.159
8-Mar-2016	08:57:49	0.155	0.158
8-Mar-2016	09:01:49	0.107	0.128
8-Mar-2016	09:05:49	0.121	0.138
8-Mar-2016	09:09:49	0.187	0.156
8-Mar-2016	09:13:49	0.159	0.153
8-Mar-2016	09:17:49	0.113	0.123
8-Mar-2016	09:21:49	0.097	0.103
8-Mar-2016	09:25:49	0.099	0.098
8-Mar-2016	09:29:49	0.099	0.098
8-Mar-2016	09:33:49	0.097	0.099
8-Mar-2016	09:37:49	0.101	0.099
9-Mar-2016	10:02:15	0.072	0.072
9-Mar-2016	10:06:15	0.071	0.071
9-Mar-2016	10:10:15	0.070	0.098

DUST MONITORING

March 2016

shading indicates values over the threshold

Monitor: 2

Threshold: 0.15 (mg/m^3)

Date	Time	Value (mg/m^3)	TWA (mg/m^3)
9-Mar-2016	10:14:15	0.152	0.097
9-Mar-2016	10:18:15	0.069	0.101
9-Mar-2016	10:22:15	0.081	0.073
9-Mar-2016	10:26:15	0.069	0.076
9-Mar-2016	10:30:15	0.078	0.075
9-Mar-2016	10:34:15	0.077	0.078
9-Mar-2016	10:38:15	0.080	0.082
9-Mar-2016	10:42:15	0.088	0.080
9-Mar-2016	10:46:15	0.071	0.082
9-Mar-2016	10:50:15	0.086	0.078
9-Mar-2016	10:54:15	0.078	0.089
9-Mar-2016	10:58:15	0.102	0.086
9-Mar-2016	11:02:15	0.078	0.083
9-Mar-2016	11:06:15	0.070	0.072
9-Mar-2016	11:10:15	0.069	0.070
9-Mar-2016	11:14:15	0.071	0.069
9-Mar-2016	11:18:15	0.068	0.070
9-Mar-2016	11:22:15	0.072	0.071
9-Mar-2016	11:26:15	0.073	0.071
9-Mar-2016	11:30:15	0.068	0.071
9-Mar-2016	11:34:15	0.072	0.070
9-Mar-2016	11:38:15	0.069	0.071
9-Mar-2016	11:42:15	0.073	0.070
9-Mar-2016	11:46:15	0.069	0.071
9-Mar-2016	11:50:15	0.070	0.070
9-Mar-2016	11:54:15	0.070	0.071
9-Mar-2016	11:58:15	0.072	0.077
9-Mar-2016	12:02:15	0.090	0.079
9-Mar-2016	12:06:15	0.075	0.080
9-Mar-2016	12:10:15	0.076	0.074
9-Mar-2016	12:14:15	0.071	0.074
9-Mar-2016	12:18:15	0.074	0.078
9-Mar-2016	12:22:15	0.089	0.085
9-Mar-2016	12:26:15	0.091	0.085
9-Mar-2016	12:30:15	0.076	0.080
9-Mar-2016	12:34:15	0.072	0.074
9-Mar-2016	12:38:15	0.073	0.072
9-Mar-2016	12:42:15	0.071	0.073
9-Mar-2016	12:46:15	0.076	0.073
9-Mar-2016	12:50:15	0.071	0.075
9-Mar-2016	12:54:15	0.077	0.074

DUST MONITORING

March 2016

shading indicates values over the threshold

Monitor: 2

Threshold: 0.15 (mg/m^3)

Date	Time	Value (mg/m^3)	TWA (mg/m^3)
9-Mar-2016	12:58:15	0.073	0.074
9-Mar-2016	13:02:15	0.071	0.073
9-Mar-2016	13:06:15	0.074	0.071
9-Mar-2016	13:10:15	0.069	0.072
9-Mar-2016	13:14:15	0.072	0.071
9-Mar-2016	13:18:15	0.071	0.073
9-Mar-2016	13:22:15	0.075	0.081
9-Mar-2016	13:26:15	0.097	0.081
9-Mar-2016	13:30:15	0.071	0.080
9-Mar-2016	13:34:15	0.072	0.072
9-Mar-2016	13:38:15	0.074	0.074
9-Mar-2016	13:42:15	0.077	0.075
9-Mar-2016	13:46:15	0.075	0.075
9-Mar-2016	13:50:15	0.074	0.075
9-Mar-2016	13:54:15	0.076	0.077
9-Mar-2016	13:58:15	0.082	0.078
9-Mar-2016	14:02:15	0.077	0.081
9-Mar-2016	14:06:15	0.083	0.085
9-Mar-2016	14:10:15	0.094	0.083
9-Mar-2016	14:14:15	0.072	0.086
9-Mar-2016	14:18:15	0.091	0.078
9-Mar-2016	14:22:15	0.072	0.078
9-Mar-2016	14:26:15	0.072	0.076
9-Mar-2016	14:30:15	0.083	0.078
9-Mar-2016	14:34:15	0.080	0.083
9-Mar-2016	14:38:15	0.086	0.082
9-Mar-2016	14:42:15	0.080	0.080
9-Mar-2016	14:46:15	0.073	0.076
9-Mar-2016	14:50:15	0.075	0.074
9-Mar-2016	14:54:15	0.075	0.075
9-Mar-2016	14:58:15	0.076	0.075
9-Mar-2016	15:02:15	0.075	0.076
9-Mar-2016	15:06:15	0.076	0.075
9-Mar-2016	15:10:15	0.073	0.074
9-Mar-2016	15:14:15	0.072	0.073
9-Mar-2016	15:18:15	0.075	0.073
9-Mar-2016	15:22:15	0.072	0.073
9-Mar-2016	15:26:15	0.071	0.075
9-Mar-2016	15:30:15	0.081	0.076
9-Mar-2016	15:34:15	0.075	0.075
9-Mar-2016	15:38:15	0.070	0.078

DUST MONITORING

March 2016

shading indicates values over the threshold

Monitor: 2

Threshold: 0.15 (mg/m^3)

Date	Time	Value (mg/m^3)	TWA (mg/m^3)
9-Mar-2016	15:42:15	0.090	0.078
9-Mar-2016	15:46:15	0.073	0.079
9-Mar-2016	15:50:15	0.073	0.073
9-Mar-2016	15:54:15	0.072	0.076
9-Mar-2016	15:58:15	0.082	0.077
9-Mar-2016	16:02:15	0.076	0.078
9-Mar-2016	16:06:15	0.075	0.075
9-Mar-2016	16:10:15	0.074	0.085
9-Mar-2016	16:14:15	0.107	0.091
10-Mar-2016	08:46:58	0.082	0.078
10-Mar-2016	08:50:58	0.074	0.081
10-Mar-2016	08:54:58	0.087	0.079
10-Mar-2016	08:58:58	0.076	0.082
10-Mar-2016	09:02:58	0.083	0.081
10-Mar-2016	09:06:58	0.083	0.085
10-Mar-2016	09:10:58	0.089	0.060
10-Mar-2016	09:14:58	0.007	0.063
10-Mar-2016	09:18:58	0.094	0.060
10-Mar-2016	09:22:58	0.078	0.084
10-Mar-2016	09:26:58	0.080	0.092
10-Mar-2016	09:30:58	0.117	0.097
10-Mar-2016	09:34:58	0.094	0.098
10-Mar-2016	09:38:58	0.084	0.089
10-Mar-2016	09:42:58	0.088	0.086
10-Mar-2016	09:46:58	0.086	0.087
10-Mar-2016	09:50:58	0.088	0.084
10-Mar-2016	09:54:58	0.079	0.081
10-Mar-2016	09:58:58	0.077	0.077
10-Mar-2016	10:02:58	0.075	0.076
10-Mar-2016	10:06:58	0.077	0.076
10-Mar-2016	10:10:58	0.076	0.077
10-Mar-2016	10:14:58	0.077	0.076
10-Mar-2016	10:18:58	0.076	0.079
10-Mar-2016	10:22:58	0.085	0.080
10-Mar-2016	10:26:58	0.079	0.080
10-Mar-2016	10:30:58	0.076	0.077
10-Mar-2016	10:34:58	0.076	0.076
10-Mar-2016	10:38:58	0.077	0.077
10-Mar-2016	10:42:58	0.077	0.086
10-Mar-2016	10:46:58	0.104	0.088
10-Mar-2016	10:50:58	0.082	0.088

DUST MONITORING

March 2016

shading indicates values over the threshold

Monitor: 2

Threshold: 0.15 (mg/m^3)

Date	Time	Value (mg/m^3)	TWA (mg/m^3)
10-Mar-2016	10:54:58	0.078	0.079
10-Mar-2016	10:58:58	0.078	0.079
10-Mar-2016	11:02:58	0.081	0.079
10-Mar-2016	11:06:58	0.078	0.079
10-Mar-2016	11:10:58	0.078	0.078
10-Mar-2016	11:14:58	0.079	0.079
10-Mar-2016	11:18:58	0.079	0.079
10-Mar-2016	11:22:58	0.078	0.078
10-Mar-2016	11:26:58	0.077	0.078
10-Mar-2016	11:30:58	0.078	0.078
10-Mar-2016	11:34:58	0.078	0.079
10-Mar-2016	11:38:58	0.080	0.079
10-Mar-2016	11:42:58	0.079	0.079
10-Mar-2016	11:46:58	0.078	0.079
10-Mar-2016	11:50:58	0.080	0.078
10-Mar-2016	11:54:58	0.076	0.078
10-Mar-2016	11:58:58	0.078	0.078
10-Mar-2016	12:02:58	0.079	0.078
10-Mar-2016	12:06:58	0.078	0.078
10-Mar-2016	12:10:58	0.077	0.078
10-Mar-2016	12:14:58	0.079	0.081
10-Mar-2016	12:18:58	0.086	0.081
10-Mar-2016	12:22:58	0.078	0.081
10-Mar-2016	12:26:58	0.079	0.079
10-Mar-2016	12:30:58	0.079	0.079
10-Mar-2016	12:34:58	0.079	0.079
10-Mar-2016	12:38:58	0.078	0.078
10-Mar-2016	12:42:58	0.078	0.080
10-Mar-2016	12:46:58	0.083	0.080
10-Mar-2016	12:50:58	0.079	0.080
10-Mar-2016	12:54:58	0.079	0.082
10-Mar-2016	12:58:58	0.089	0.083
10-Mar-2016	13:02:58	0.081	0.084
10-Mar-2016	13:06:58	0.081	0.080
10-Mar-2016	13:10:58	0.078	0.079
10-Mar-2016	13:14:58	0.079	0.079
10-Mar-2016	13:18:58	0.079	0.079
10-Mar-2016	13:22:58	0.079	0.062
10-Mar-2016	13:26:58	0.028	0.056
10-Mar-2016	13:30:58	0.061	0.032
10-Mar-2016	13:34:58	0.007	0.054

DUST MONITORING

March 2016

shading indicates values over the threshold

Monitor: 2

Threshold: 0.15 (mg/m^3)

Date	Time	Value (mg/m^3)	TWA (mg/m^3)
10-Mar-2016	13:38:58	0.094	0.062
10-Mar-2016	13:42:58	0.085	0.088
10-Mar-2016	13:46:58	0.086	0.058
10-Mar-2016	13:50:58	0.003	0.038
10-Mar-2016	13:54:58	0.025	0.023
10-Mar-2016	13:58:58	0.042	0.036
10-Mar-2016	14:02:58	0.040	0.039
10-Mar-2016	14:06:58	0.034	0.029
10-Mar-2016	14:10:58	0.012	0.024
10-Mar-2016	14:14:58	0.027	0.045
10-Mar-2016	14:18:58	0.096	0.043
10-Mar-2016	14:22:58	0.007	0.065
10-Mar-2016	14:26:58	0.092	0.064
10-Mar-2016	14:30:58	0.092	0.091
10-Mar-2016	14:34:58	0.090	0.068
10-Mar-2016	14:38:58	0.021	0.039
10-Mar-2016	14:42:58	0.005	0.038
10-Mar-2016	14:46:58	0.088	0.064
10-Mar-2016	14:50:58	0.098	0.090
10-Mar-2016	14:54:58	0.085	0.090
10-Mar-2016	14:58:58	0.088	0.060
10-Mar-2016	15:02:58	0.008	0.057
10-Mar-2016	15:06:58	0.076	0.044
10-Mar-2016	15:10:58	0.048	0.055
10-Mar-2016	15:14:58	0.040	0.032
10-Mar-2016	15:18:58	0.008	0.018
10-Mar-2016	15:22:58	0.006	0.008
10-Mar-2016	15:26:58	0.010	0.015
10-Mar-2016	15:30:58	0.028	0.021
10-Mar-2016	15:34:58	0.024	0.032
10-Mar-2016	15:38:58	0.045	0.048
10-Mar-2016	15:42:58	0.074	0.070
10-Mar-2016	15:46:58	0.092	0.064
10-Mar-2016	15:50:58	0.027	0.063
10-Mar-2016	15:54:58	0.071	0.045
10-Mar-2016	15:58:58	0.036	0.051
10-Mar-2016	16:02:58	0.045	0.041
15-Mar-2016	15:10:36	0.043	0.044
15-Mar-2016	15:14:36	0.045	0.043
15-Mar-2016	15:18:36	0.042	0.042
15-Mar-2016	15:22:36	0.040	0.041

DUST MONITORING

March 2016

shading indicates values over the threshold

Monitor: 2

Threshold: 0.15 (mg/m^3)

Date	Time	Value (mg/m^3)	TWA (mg/m^3)
15-Mar-2016	15:26:36	0.041	0.041
15-Mar-2016	15:30:36	0.041	0.041
15-Mar-2016	15:34:36	0.040	0.040
15-Mar-2016	15:38:36	0.040	0.041
15-Mar-2016	15:42:36	0.042	0.041
15-Mar-2016	15:46:36	0.040	0.041
15-Mar-2016	15:50:36	0.040	0.040
15-Mar-2016	15:54:36	0.040	0.040
15-Mar-2016	15:58:36	0.041	0.041
15-Mar-2016	16:02:36	0.041	0.041
15-Mar-2016	16:06:36	0.041	0.042
15-Mar-2016	16:10:36	0.043	0.042
15-Mar-2016	16:14:36	0.041	0.042
17-Mar-2016	08:25:49	0.044	0.040
17-Mar-2016	08:29:49	0.036	0.039
17-Mar-2016	08:33:49	0.036	0.037
17-Mar-2016	08:37:49	0.039	0.039
17-Mar-2016	08:41:49	0.041	0.041
17-Mar-2016	08:45:49	0.042	0.041
17-Mar-2016	08:49:49	0.040	0.041
17-Mar-2016	08:53:49	0.041	0.040
17-Mar-2016	08:57:49	0.039	0.039
17-Mar-2016	09:01:49	0.037	0.037
17-Mar-2016	09:05:49	0.036	0.036
17-Mar-2016	09:09:49	0.036	0.037
17-Mar-2016	09:13:49	0.038	0.044
17-Mar-2016	09:17:49	0.057	0.047
17-Mar-2016	09:21:49	0.045	0.046
17-Mar-2016	09:25:49	0.037	0.040
17-Mar-2016	09:29:49	0.037	0.037
17-Mar-2016	09:33:49	0.037	0.044
17-Mar-2016	09:37:49	0.058	0.044
17-Mar-2016	09:41:49	0.037	0.044
17-Mar-2016	09:45:49	0.038	0.038
17-Mar-2016	09:49:49	0.039	0.039
17-Mar-2016	09:53:49	0.039	0.039
17-Mar-2016	09:57:49	0.039	0.039
17-Mar-2016	10:01:49	0.038	0.038
17-Mar-2016	10:05:49	0.037	0.043
17-Mar-2016	10:09:49	0.053	0.043
17-Mar-2016	10:13:49	0.038	0.043

DUST MONITORING

March 2016

shading indicates values over the threshold

Monitor: 2

Threshold: 0.15 (mg/m^3)

Date	Time	Value (mg/m^3)	TWA (mg/m^3)
17-Mar-2016	10:17:49	0.038	0.038
17-Mar-2016	10:21:49	0.037	0.037
17-Mar-2016	10:25:49	0.036	0.037
17-Mar-2016	10:29:49	0.038	0.037
17-Mar-2016	10:33:49	0.037	0.037
17-Mar-2016	10:37:49	0.037	0.037
17-Mar-2016	10:41:49	0.038	0.037
17-Mar-2016	10:45:49	0.037	0.044
17-Mar-2016	10:49:49	0.056	0.043
17-Mar-2016	10:53:49	0.037	0.046
17-Mar-2016	10:57:49	0.044	0.039
17-Mar-2016	11:01:49	0.035	0.040
17-Mar-2016	11:05:49	0.040	0.038
17-Mar-2016	11:09:49	0.038	0.038
17-Mar-2016	11:13:49	0.036	0.037
17-Mar-2016	11:17:49	0.036	0.036
17-Mar-2016	11:21:49	0.035	0.036
17-Mar-2016	11:25:49	0.036	0.036
17-Mar-2016	11:29:49	0.038	0.037
17-Mar-2016	11:33:49	0.036	0.036
17-Mar-2016	11:37:49	0.035	0.036
17-Mar-2016	11:41:49	0.036	0.062
17-Mar-2016	11:45:49	0.116	0.063
17-Mar-2016	11:49:49	0.036	0.067
17-Mar-2016	11:53:49	0.050	0.041
17-Mar-2016	11:57:49	0.036	0.041
17-Mar-2016	12:01:49	0.036	0.036
17-Mar-2016	12:05:49	0.036	0.036
17-Mar-2016	12:09:49	0.036	0.042
17-Mar-2016	12:13:49	0.053	0.096
17-Mar-2016	12:17:49	0.198	0.106
17-Mar-2016	12:21:49	0.067	0.101
17-Mar-2016	12:25:49	0.038	0.047
17-Mar-2016	12:29:49	0.037	0.038
17-Mar-2016	12:33:49	0.038	0.037
17-Mar-2016	12:37:49	0.037	0.037
17-Mar-2016	12:41:49	0.037	0.038
17-Mar-2016	12:45:49	0.041	0.038
17-Mar-2016	12:49:49	0.037	0.039
17-Mar-2016	12:53:49	0.039	0.038
17-Mar-2016	12:57:49	0.039	0.038

DUST MONITORING

March 2016

shading indicates values over the threshold

Monitor: 2

Threshold: 0.15 (mg/m^3)

Date	Time	Value (mg/m^3)	TWA (mg/m^3)
17-Mar-2016	13:01:49	0.037	0.038
17-Mar-2016	13:05:49	0.037	0.064
17-Mar-2016	13:09:49	0.117	0.064
17-Mar-2016	13:13:49	0.039	0.065
17-Mar-2016	13:17:49	0.040	0.043
17-Mar-2016	13:21:49	0.049	0.051
17-Mar-2016	13:25:49	0.065	0.057
17-Mar-2016	13:29:49	0.056	0.053
17-Mar-2016	13:33:49	0.038	0.044
17-Mar-2016	13:37:49	0.039	0.038
17-Mar-2016	13:41:49	0.037	0.049
17-Mar-2016	13:45:49	0.070	0.049
17-Mar-2016	13:49:49	0.039	0.049
17-Mar-2016	13:53:49	0.038	0.038
17-Mar-2016	13:57:49	0.038	0.038
17-Mar-2016	14:01:49	0.039	0.040
17-Mar-2016	14:05:49	0.042	0.040
17-Mar-2016	14:09:49	0.039	0.040
17-Mar-2016	14:13:49	0.039	0.039
17-Mar-2016	14:17:49	0.040	0.052
17-Mar-2016	14:21:49	0.078	0.052
17-Mar-2016	14:25:49	0.039	0.053
17-Mar-2016	14:29:49	0.041	0.040
17-Mar-2016	14:33:49	0.039	0.041
17-Mar-2016	14:37:49	0.043	0.041
17-Mar-2016	14:41:49	0.041	0.041
17-Mar-2016	14:45:49	0.039	0.040
17-Mar-2016	14:49:49	0.040	0.043
17-Mar-2016	14:53:49	0.050	0.047
17-Mar-2016	14:57:49	0.051	0.047
17-Mar-2016	15:01:49	0.041	0.044
17-Mar-2016	15:05:49	0.041	0.044
17-Mar-2016	15:09:49	0.049	0.043
17-Mar-2016	15:13:49	0.040	0.043
17-Mar-2016	15:17:49	0.041	0.041
17-Mar-2016	15:21:49	0.041	0.041
17-Mar-2016	15:25:49	0.041	0.041
17-Mar-2016	15:29:49	0.041	0.041
17-Mar-2016	15:33:49	0.041	0.041
17-Mar-2016	15:37:49	0.040	0.041
17-Mar-2016	15:41:49	0.043	0.042

DUST MONITORING

March 2016

shading indicates values over the threshold

Monitor: 2

Threshold: 0.15 (mg/m^3)

Date	Time	Value (mg/m^3)	TWA (mg/m^3)
17-Mar-2016	15:45:49	0.042	0.042
17-Mar-2016	15:49:49	0.042	0.042
18-Mar-2016	12:39:44	0.057	0.055
18-Mar-2016	12:43:44	0.052	0.054
18-Mar-2016	12:47:44	0.053	0.053
18-Mar-2016	12:51:44	0.054	0.052
18-Mar-2016	12:55:44	0.050	0.052
18-Mar-2016	12:59:44	0.051	0.051
18-Mar-2016	13:03:44	0.051	0.051
18-Mar-2016	13:07:44	0.050	0.051
18-Mar-2016	13:11:44	0.051	0.051
18-Mar-2016	13:15:44	0.051	0.051
18-Mar-2016	13:19:44	0.051	0.053
18-Mar-2016	13:23:44	0.056	0.053
18-Mar-2016	13:27:44	0.051	0.053
18-Mar-2016	13:31:44	0.051	0.051
18-Mar-2016	13:35:44	0.051	0.051
18-Mar-2016	13:39:44	0.051	0.051
18-Mar-2016	13:43:44	0.051	0.051
18-Mar-2016	13:47:44	0.050	0.051
18-Mar-2016	13:51:44	0.052	0.051
18-Mar-2016	13:55:44	0.051	0.051
18-Mar-2016	13:59:44	0.051	0.051
18-Mar-2016	14:03:44	0.051	0.051
18-Mar-2016	14:07:44	0.051	0.052
18-Mar-2016	14:11:44	0.054	0.053
18-Mar-2016	14:15:44	0.053	0.053
18-Mar-2016	14:19:44	0.053	0.054
18-Mar-2016	14:23:44	0.055	0.054
22-Mar-2016	08:19:58	0.028	0.025
22-Mar-2016	08:23:58	0.022	0.024
22-Mar-2016	08:27:58	0.022	0.021
22-Mar-2016	08:31:58	0.018	0.019
22-Mar-2016	08:35:58	0.017	0.016
22-Mar-2016	08:39:58	0.013	0.015
22-Mar-2016	08:43:58	0.016	0.014
22-Mar-2016	08:47:58	0.013	0.014
22-Mar-2016	08:51:58	0.012	0.013
22-Mar-2016	08:55:58	0.013	0.013
22-Mar-2016	08:59:58	0.014	0.014
22-Mar-2016	09:03:58	0.014	0.015

DUST MONITORING

March 2016

shading indicates values over the threshold

Monitor: 2

Threshold: 0.15 (mg/m^3)

Date	Time	Value (mg/m^3)	TWA (mg/m^3)
22-Mar-2016	09:07:58	0.017	0.015
22-Mar-2016	09:11:58	0.015	0.016
22-Mar-2016	09:15:58	0.015	0.015
22-Mar-2016	09:19:58	0.014	0.014
22-Mar-2016	09:23:58	0.013	0.013
22-Mar-2016	09:27:58	0.012	0.012
22-Mar-2016	09:31:58	0.012	0.010
22-Mar-2016	09:35:58	0.007	0.008
22-Mar-2016	09:39:58	0.006	0.006
22-Mar-2016	09:43:58	0.006	0.006
22-Mar-2016	09:47:58	0.005	0.006
22-Mar-2016	09:51:58	0.006	0.006
22-Mar-2016	09:55:58	0.006	0.006
22-Mar-2016	09:59:58	0.006	0.006
22-Mar-2016	10:03:58	0.006	0.006
22-Mar-2016	10:07:58	0.007	0.007
22-Mar-2016	10:11:58	0.007	0.007
22-Mar-2016	10:15:58	0.008	0.009
22-Mar-2016	10:19:58	0.011	0.008
22-Mar-2016	10:23:58	0.006	0.008
22-Mar-2016	10:27:58	0.006	0.015
22-Mar-2016	10:31:58	0.033	0.015
22-Mar-2016	10:35:58	0.007	0.016
22-Mar-2016	10:39:58	0.007	0.007
22-Mar-2016	10:43:58	0.007	0.007
22-Mar-2016	10:47:58	0.006	0.006
22-Mar-2016	10:51:58	0.006	0.006
22-Mar-2016	10:55:58	0.006	0.008
22-Mar-2016	10:59:58	0.012	0.008
22-Mar-2016	11:03:58	0.006	0.008
22-Mar-2016	11:07:58	0.006	0.006
22-Mar-2016	11:11:58	0.006	0.008
22-Mar-2016	11:15:58	0.012	0.008
22-Mar-2016	11:19:58	0.007	0.008
22-Mar-2016	11:23:58	0.006	0.006
22-Mar-2016	11:27:58	0.006	0.007
22-Mar-2016	11:31:58	0.008	0.007
22-Mar-2016	11:35:58	0.008	0.007
22-Mar-2016	11:39:58	0.006	0.024
22-Mar-2016	11:43:58	0.057	0.027
22-Mar-2016	11:47:58	0.018	0.028

DUST MONITORING

March 2016

shading indicates values over the threshold

Monitor: 2

Threshold: 0.15 (mg/m^3)

Date	Time	Value (mg/m^3)	TWA (mg/m^3)
22-Mar-2016	11:51:58	0.008	0.011
22-Mar-2016	11:55:58	0.008	0.008
22-Mar-2016	11:59:58	0.008	0.011
22-Mar-2016	12:03:58	0.016	0.011
22-Mar-2016	12:07:58	0.009	0.012
22-Mar-2016	12:11:58	0.011	0.009
22-Mar-2016	12:15:58	0.007	0.009
22-Mar-2016	12:19:58	0.010	0.009
22-Mar-2016	12:23:58	0.009	0.009
22-Mar-2016	12:27:58	0.008	0.009
22-Mar-2016	12:31:58	0.009	0.010
22-Mar-2016	12:35:58	0.012	0.031
22-Mar-2016	12:39:58	0.071	0.032
22-Mar-2016	12:43:58	0.014	0.032
22-Mar-2016	12:47:58	0.010	0.011
22-Mar-2016	12:51:58	0.010	0.013
22-Mar-2016	12:55:58	0.018	0.015
22-Mar-2016	12:59:58	0.016	0.015
22-Mar-2016	13:03:58	0.010	0.012
22-Mar-2016	13:07:58	0.009	0.009
22-Mar-2016	13:11:58	0.009	0.010
22-Mar-2016	13:15:58	0.011	0.011
22-Mar-2016	13:19:58	0.012	0.011
22-Mar-2016	13:23:58	0.010	0.012
22-Mar-2016	13:27:58	0.014	0.011
22-Mar-2016	13:31:58	0.008	0.010
22-Mar-2016	13:35:58	0.009	0.010
22-Mar-2016	13:39:58	0.012	0.015
22-Mar-2016	13:43:58	0.024	0.016
22-Mar-2016	13:47:58	0.011	0.015
22-Mar-2016	13:51:58	0.009	0.014
22-Mar-2016	13:55:58	0.021	0.017
22-Mar-2016	13:59:58	0.020	0.018
22-Mar-2016	14:03:58	0.012	0.015
22-Mar-2016	14:07:58	0.012	0.012
22-Mar-2016	14:11:58	0.013	0.012
22-Mar-2016	14:15:58	0.011	0.013
22-Mar-2016	14:19:58	0.014	0.012
22-Mar-2016	14:23:58	0.012	0.013
22-Mar-2016	14:27:58	0.013	0.012
22-Mar-2016	14:31:58	0.011	0.012

DUST MONITORING

March 2016

shading indicates values over the threshold

Monitor: 2

Threshold: 0.15 (mg/m^3)

Date	Time	Value (mg/m^3)	TWA (mg/m^3)
22-Mar-2016	14:35:58	0.011	0.011
22-Mar-2016	14:39:58	0.011	0.011
23-Mar-2016	07:08:20	0.018	0.017
23-Mar-2016	07:12:20	0.015	0.019
23-Mar-2016	07:16:20	0.024	0.019
23-Mar-2016	07:20:20	0.018	0.020
23-Mar-2016	07:24:20	0.019	0.021
23-Mar-2016	07:28:20	0.025	0.022
23-Mar-2016	07:32:20	0.022	0.033
23-Mar-2016	07:36:20	0.052	0.031
23-Mar-2016	07:40:20	0.018	0.029
23-Mar-2016	07:44:20	0.017	0.018
23-Mar-2016	07:48:20	0.018	0.022
23-Mar-2016	07:52:20	0.032	0.024
23-Mar-2016	07:56:20	0.023	0.024
23-Mar-2016	08:00:20	0.018	0.020
23-Mar-2016	08:04:20	0.018	0.018
23-Mar-2016	08:08:20	0.017	0.018
23-Mar-2016	08:12:20	0.018	0.018
23-Mar-2016	08:16:20	0.018	0.019
23-Mar-2016	08:20:20	0.020	0.021
23-Mar-2016	08:24:20	0.024	0.021
23-Mar-2016	08:28:20	0.020	0.022
23-Mar-2016	08:32:20	0.021	0.021
23-Mar-2016	08:36:20	0.021	0.022
23-Mar-2016	08:40:20	0.023	0.021
23-Mar-2016	08:44:20	0.019	0.021
23-Mar-2016	08:48:20	0.021	0.020
23-Mar-2016	08:52:20	0.021	0.021
23-Mar-2016	08:56:20	0.022	0.022
23-Mar-2016	09:00:20	0.022	0.022
23-Mar-2016	09:04:20	0.022	0.022
23-Mar-2016	09:08:20	0.022	0.022
23-Mar-2016	09:12:20	0.022	0.022
23-Mar-2016	09:16:20	0.022	0.022
23-Mar-2016	09:20:20	0.023	0.023
23-Mar-2016	09:24:20	0.024	0.023
23-Mar-2016	09:28:20	0.022	0.023
23-Mar-2016	09:32:20	0.023	0.023
23-Mar-2016	09:36:20	0.023	0.023
23-Mar-2016	09:40:20	0.024	0.023

DUST MONITORING

March 2016

shading indicates values over the threshold

Monitor: 2

Threshold: 0.15 (mg/m^3)

Date	Time	Value (mg/m^3)	TWA (mg/m^3)
23-Mar-2016	09:44:20	0.023	0.024
23-Mar-2016	09:48:20	0.024	0.023
23-Mar-2016	09:52:20	0.023	0.023
23-Mar-2016	09:56:20	0.023	0.023
23-Mar-2016	10:00:20	0.024	0.023
23-Mar-2016	10:04:20	0.023	0.024
23-Mar-2016	10:08:20	0.024	0.023
23-Mar-2016	10:12:20	0.023	0.023
23-Mar-2016	10:16:20	0.023	0.023
23-Mar-2016	10:20:20	0.023	0.023
23-Mar-2016	10:24:20	0.024	0.024
23-Mar-2016	10:28:20	0.024	0.024
23-Mar-2016	10:32:20	0.024	0.023
23-Mar-2016	10:36:20	0.022	0.023
23-Mar-2016	10:40:20	0.023	0.023
23-Mar-2016	10:44:20	0.023	0.023
23-Mar-2016	10:48:20	0.022	0.022
23-Mar-2016	10:52:20	0.022	0.022
23-Mar-2016	10:56:20	0.022	0.022
23-Mar-2016	11:00:20	0.023	0.025
23-Mar-2016	11:04:20	0.029	0.025
23-Mar-2016	11:08:20	0.022	0.025
23-Mar-2016	11:12:20	0.025	0.023
23-Mar-2016	11:16:20	0.022	0.023
23-Mar-2016	11:20:20	0.023	0.023
23-Mar-2016	11:24:20	0.024	0.027
23-Mar-2016	11:28:20	0.033	0.027
23-Mar-2016	11:32:20	0.023	0.027
23-Mar-2016	11:36:20	0.025	0.025
23-Mar-2016	11:40:20	0.026	0.024
23-Mar-2016	11:44:20	0.022	0.024
23-Mar-2016	11:48:20	0.024	0.023
23-Mar-2016	11:52:20	0.023	0.024
23-Mar-2016	11:56:20	0.024	0.024
23-Mar-2016	12:00:20	0.025	0.024
23-Mar-2016	12:04:20	0.024	0.024
23-Mar-2016	12:08:20	0.023	0.025
23-Mar-2016	12:12:20	0.027	0.024
23-Mar-2016	12:16:20	0.021	0.024
23-Mar-2016	12:20:20	0.024	0.023
23-Mar-2016	12:24:20	0.023	0.027

DUST MONITORING

March 2016

shading indicates values over the threshold

Monitor: 2

Threshold: 0.15 (mg/m^3)

Date	Time	Value (mg/m^3)	TWA (mg/m^3)
23-Mar-2016	12:28:20	0.034	0.029
23-Mar-2016	12:32:20	0.029	0.029
23-Mar-2016	12:36:20	0.024	0.025
23-Mar-2016	12:40:20	0.023	0.024
23-Mar-2016	12:44:20	0.025	0.025
23-Mar-2016	12:48:20	0.028	0.027
23-Mar-2016	12:52:20	0.028	0.028
23-Mar-2016	12:56:20	0.028	0.028
23-Mar-2016	13:00:20	0.029	0.030
23-Mar-2016	13:04:20	0.034	0.033
23-Mar-2016	13:08:20	0.037	0.035
23-Mar-2016	13:12:20	0.034	0.035
23-Mar-2016	13:16:20	0.033	0.031
23-Mar-2016	13:20:20	0.027	0.030
23-Mar-2016	13:24:20	0.030	0.028
23-Mar-2016	13:28:20	0.026	0.027
23-Mar-2016	13:32:20	0.025	0.025
23-Mar-2016	13:36:20	0.025	0.026
23-Mar-2016	13:40:20	0.029	0.027
23-Mar-2016	13:44:20	0.027	0.027
23-Mar-2016	13:48:20	0.025	0.027
23-Mar-2016	13:52:20	0.030	0.028
23-Mar-2016	13:56:20	0.028	0.028
23-Mar-2016	14:00:20	0.025	0.027
23-Mar-2016	14:04:20	0.028	0.026
23-Mar-2016	14:08:20	0.026	0.027
23-Mar-2016	14:12:20	0.026	0.026
23-Mar-2016	14:16:20	0.025	0.025
23-Mar-2016	14:20:20	0.025	0.026
23-Mar-2016	14:24:20	0.027	0.026
23-Mar-2016	14:28:20	0.027	0.029
23-Mar-2016	14:32:20	0.032	0.030
23-Mar-2016	14:36:20	0.030	0.029
23-Mar-2016	14:40:20	0.025	0.026
23-Mar-2016	14:44:20	0.023	0.024
23-Mar-2016	14:48:20	0.025	0.024
23-Mar-2016	14:52:20	0.024	0.024
23-Mar-2016	14:56:20	0.024	0.024
23-Mar-2016	15:00:20	0.024	0.026
23-Mar-2016	15:04:20	0.029	0.026
23-Mar-2016	15:08:20	0.026	0.027

DUST MONITORING

March 2016

shading indicates values over the threshold

Monitor: 2

Threshold: 0.15 (mg/m^3)

Date	Time	Value (mg/m^3)	TWA (mg/m^3)
23-Mar-2016	15:12:20	0.027	0.027
23-Mar-2016	15:16:20	0.028	0.028
23-Mar-2016	15:20:20	0.028	0.028
23-Mar-2016	15:24:20	0.028	0.028
23-Mar-2016	15:28:20	0.027	0.027
23-Mar-2016	15:32:20	0.027	0.028
23-Mar-2016	15:36:20	0.029	0.028
23-Mar-2016	15:40:20	0.028	0.065
23-Mar-2016	15:44:20	0.139	0.069
23-Mar-2016	15:48:20	0.040	0.071
23-Mar-2016	15:52:20	0.033	0.034
23-Mar-2016	15:56:20	0.029	0.029
23-Mar-2016	16:00:20	0.025	0.027
24-Mar-2016	07:26:40	0.024	0.024
24-Mar-2016	07:30:40	0.023	0.023
24-Mar-2016	07:34:40	0.023	0.023
24-Mar-2016	07:38:40	0.022	0.023
24-Mar-2016	07:42:40	0.023	0.023
24-Mar-2016	07:46:40	0.024	0.023
24-Mar-2016	07:50:40	0.023	0.024
29-Mar-2016	10:11:14	0.031	0.032
29-Mar-2016	10:15:14	0.032	0.028
29-Mar-2016	10:19:14	0.022	0.025
29-Mar-2016	10:23:14	0.020	0.022
29-Mar-2016	10:27:14	0.024	0.024
29-Mar-2016	10:31:14	0.028	0.026
29-Mar-2016	10:35:14	0.026	0.026
29-Mar-2016	10:39:14	0.023	0.025
29-Mar-2016	10:43:14	0.025	0.024
29-Mar-2016	10:47:14	0.024	0.027
29-Mar-2016	10:51:14	0.031	0.027
29-Mar-2016	10:55:14	0.025	0.027
29-Mar-2016	10:59:14	0.024	0.025
29-Mar-2016	11:03:14	0.027	0.025
29-Mar-2016	11:07:14	0.023	0.024
29-Mar-2016	11:11:14	0.022	0.023
29-Mar-2016	11:15:14	0.023	0.024
29-Mar-2016	11:19:14	0.027	0.026
29-Mar-2016	11:23:14	0.027	0.027
29-Mar-2016	11:27:14	0.026	0.026
29-Mar-2016	11:31:14	0.024	0.026

DUST MONITORING

March 2016

shading indicates values over the threshold

Monitor: 2

Threshold: 0.15 (mg/m^3)

Date	Time	Value (mg/m^3)	TWA (mg/m^3)
29-Mar-2016	11:35:14	0.028	0.025
29-Mar-2016	11:39:14	0.022	0.025
29-Mar-2016	11:43:14	0.024	0.023
29-Mar-2016	11:47:14	0.022	0.028
29-Mar-2016	11:51:14	0.039	0.028
29-Mar-2016	11:55:14	0.022	0.028
29-Mar-2016	11:59:14	0.022	0.034
29-Mar-2016	12:03:14	0.057	0.035
29-Mar-2016	12:07:14	0.026	0.036
29-Mar-2016	12:11:14	0.024	0.024
29-Mar-2016	12:15:14	0.022	0.025
29-Mar-2016	12:19:14	0.028	0.024
29-Mar-2016	12:23:14	0.021	0.024
29-Mar-2016	12:27:14	0.024	0.023
29-Mar-2016	12:31:14	0.025	0.024
29-Mar-2016	12:35:14	0.022	0.023
29-Mar-2016	12:39:14	0.023	0.022
29-Mar-2016	12:43:14	0.021	0.022
29-Mar-2016	12:47:14	0.023	0.022
29-Mar-2016	12:51:14	0.022	0.022
29-Mar-2016	12:55:14	0.021	0.022
29-Mar-2016	12:59:14	0.023	0.022
29-Mar-2016	13:03:14	0.021	0.022
29-Mar-2016	13:07:14	0.022	0.021
29-Mar-2016	13:11:14	0.021	0.021
29-Mar-2016	13:15:14	0.021	0.021
29-Mar-2016	13:19:14	0.022	0.022
29-Mar-2016	13:23:14	0.024	0.024
29-Mar-2016	13:27:14	0.025	0.024
29-Mar-2016	13:31:14	0.022	0.023
29-Mar-2016	13:35:14	0.022	0.022
29-Mar-2016	13:39:14	0.023	0.022
29-Mar-2016	13:43:14	0.021	0.023
29-Mar-2016	13:47:14	0.026	0.023
29-Mar-2016	13:51:14	0.023	0.025
29-Mar-2016	13:55:14	0.025	0.024
29-Mar-2016	13:59:14	0.024	0.025
29-Mar-2016	14:03:14	0.027	0.026
29-Mar-2016	14:07:14	0.027	0.026
29-Mar-2016	14:11:14	0.024	0.026
29-Mar-2016	14:15:14	0.026	0.025

DUST MONITORING

March 2016

shading indicates values over the threshold

Monitor: 2

Threshold: 0.15 (mg/m^3)

Date	Time	Value (mg/m^3)	TWA (mg/m^3)
29-Mar-2016	14:19:14	0.024	0.025
29-Mar-2016	14:23:14	0.025	0.028
29-Mar-2016	14:27:14	0.035	0.028
29-Mar-2016	14:31:14	0.025	0.029
29-Mar-2016	14:35:14	0.026	0.029
29-Mar-2016	14:39:14	0.036	0.029
29-Mar-2016	14:43:14	0.024	0.029
29-Mar-2016	14:47:14	0.026	0.026
29-Mar-2016	14:51:14	0.027	0.027
29-Mar-2016	14:55:14	0.027	0.027
29-Mar-2016	14:59:14	0.026	0.026
29-Mar-2016	15:03:14	0.024	0.026
29-Mar-2016	15:07:14	0.027	0.025
29-Mar-2016	15:11:14	0.023	0.025
29-Mar-2016	15:15:14	0.024	0.024
29-Mar-2016	15:19:14	0.025	0.024
29-Mar-2016	15:23:14	0.024	0.024
29-Mar-2016	15:27:14	0.023	0.024
29-Mar-2016	15:31:14	0.025	0.025
29-Mar-2016	15:35:14	0.026	0.026
29-Mar-2016	15:39:14	0.026	0.027
29-Mar-2016	15:43:14	0.030	0.028
29-Mar-2016	15:47:14	0.028	0.028
29-Mar-2016	15:51:14	0.025	0.027
29-Mar-2016	15:55:14	0.027	0.026
29-Mar-2016	15:59:14	0.026	0.027
29-Mar-2016	16:03:14	0.027	0.025
29-Mar-2016	16:07:14	0.023	0.025
29-Mar-2016	16:11:14	0.024	0.024
29-Mar-2016	16:15:14	0.024	0.024
29-Mar-2016	16:19:14	0.024	0.027
29-Mar-2016	16:23:14	0.034	0.029
29-Mar-2016	16:27:14	0.030	0.033
29-Mar-2016	16:31:14	0.035	0.030
29-Mar-2016	16:35:14	0.026	0.029
29-Mar-2016	16:39:14	0.026	0.027
29-Mar-2016	16:43:14	0.028	0.027
29-Mar-2016	16:47:14	0.027	0.027
29-Mar-2016	16:51:14	0.027	0.027
29-Mar-2016	16:55:14	0.028	0.027
29-Mar-2016	16:59:14	0.027	0.027

DUST MONITORING

March 2016

shading indicates values over the threshold

Monitor: 2

Threshold: 0.15 (mg/m^3)

Date	Time	Value (mg/m^3)	TWA (mg/m^3)
29-Mar-2016	17:03:14	0.027	0.028
29-Mar-2016	17:07:14	0.029	0.028
29-Mar-2016	17:11:14	0.027	0.028
29-Mar-2016	17:15:14	0.028	0.028
29-Mar-2016	17:19:14	0.030	0.029
29-Mar-2016	17:23:14	0.029	0.029
29-Mar-2016	17:27:14	0.027	0.028
29-Mar-2016	17:31:14	0.029	0.028
29-Mar-2016	17:35:14	0.029	0.028
29-Mar-2016	17:39:14	0.027	0.028
29-Mar-2016	17:43:14	0.027	0.028
29-Mar-2016	17:47:14	0.031	0.029
29-Mar-2016	17:51:14	0.029	0.029
29-Mar-2016	17:55:14	0.027	0.028
29-Mar-2016	17:59:14	0.027	0.027
29-Mar-2016	18:03:14	0.027	0.027
29-Mar-2016	18:07:14	0.027	0.028
29-Mar-2016	18:11:14	0.030	0.029
29-Mar-2016	18:15:14	0.029	0.030
29-Mar-2016	18:19:14	0.030	0.030
29-Mar-2016	18:23:14	0.030	0.030
29-Mar-2016	18:27:14	0.030	0.031
29-Mar-2016	18:31:14	0.034	0.032
29-Mar-2016	18:35:14	0.033	0.034
29-Mar-2016	18:39:14	0.035	0.034
29-Mar-2016	18:43:14	0.034	0.034
29-Mar-2016	18:47:14	0.034	0.034
29-Mar-2016	18:51:14	0.033	0.033
29-Mar-2016	18:55:14	0.032	0.033
29-Mar-2016	18:59:14	0.034	0.031
29-Mar-2016	19:03:14	0.028	0.030
29-Mar-2016	19:07:14	0.028	0.029
29-Mar-2016	19:11:14	0.030	0.031
29-Mar-2016	19:15:14	0.034	0.032
29-Mar-2016	19:19:14	0.033	0.034
29-Mar-2016	19:23:14	0.034	0.033
29-Mar-2016	19:27:14	0.033	0.034
29-Mar-2016	19:31:14	0.034	0.034
29-Mar-2016	19:35:14	0.035	0.034
29-Mar-2016	19:39:14	0.033	0.034
29-Mar-2016	19:43:14	0.035	0.034

DUST MONITORING

March 2016

shading indicates values over the threshold

Monitor: 2

Threshold: 0.15 (mg/m^3)

Date	Time	Value (mg/m^3)	TWA (mg/m^3)
29-Mar-2016	19:47:14	0.033	0.034
29-Mar-2016	19:51:14	0.034	0.035
29-Mar-2016	19:55:14	0.037	0.036
29-Mar-2016	19:59:14	0.036	0.036
29-Mar-2016	20:03:14	0.035	0.035
29-Mar-2016	20:07:14	0.035	0.036
29-Mar-2016	20:11:14	0.037	0.036
29-Mar-2016	20:15:14	0.037	0.038
29-Mar-2016	20:19:14	0.041	0.039
29-Mar-2016	20:23:14	0.040	0.039
29-Mar-2016	20:27:14	0.037	0.038
29-Mar-2016	20:31:14	0.036	0.039
29-Mar-2016	20:35:14	0.043	0.038
29-Mar-2016	20:39:14	0.036	0.039
29-Mar-2016	20:43:14	0.038	0.036
29-Mar-2016	20:47:14	0.035	0.038
29-Mar-2016	20:51:14	0.041	0.038
29-Mar-2016	20:55:14	0.039	0.039
29-Mar-2016	20:59:14	0.038	0.039
29-Mar-2016	21:03:14	0.040	0.040
29-Mar-2016	21:07:14	0.041	0.040
29-Mar-2016	21:11:14	0.039	0.040
29-Mar-2016	21:15:14	0.039	0.038
29-Mar-2016	21:19:14	0.036	0.038
29-Mar-2016	21:23:14	0.038	0.037
29-Mar-2016	21:27:14	0.036	0.037
29-Mar-2016	21:31:14	0.038	0.036
29-Mar-2016	21:35:14	0.035	0.036
29-Mar-2016	21:39:14	0.034	0.035
29-Mar-2016	21:43:14	0.036	0.036
29-Mar-2016	21:47:14	0.038	0.038
29-Mar-2016	21:51:14	0.041	0.042
29-Mar-2016	21:55:14	0.047	0.044
29-Mar-2016	21:59:14	0.043	0.045
30-Mar-2016	07:43:15	0.025	0.026
30-Mar-2016	07:47:15	0.026	0.025
30-Mar-2016	07:51:15	0.025	0.025
30-Mar-2016	07:55:15	0.025	0.025
30-Mar-2016	07:59:15	0.024	0.025
30-Mar-2016	08:03:15	0.027	0.025
30-Mar-2016	08:07:15	0.025	0.026

DUST MONITORING

March 2016

shading indicates values over the threshold

Monitor: 2

Threshold: 0.15 (mg/m^3)

Date	Time	Value (mg/m^3)	TWA (mg/m^3)
30-Mar-2016	08:11:15	0.025	0.025
30-Mar-2016	08:15:15	0.025	0.027
30-Mar-2016	08:19:15	0.032	0.029
30-Mar-2016	08:23:15	0.031	0.029
30-Mar-2016	08:27:15	0.025	0.027
30-Mar-2016	08:31:15	0.025	0.025
30-Mar-2016	08:35:15	0.026	0.026
30-Mar-2016	08:39:15	0.028	0.029
30-Mar-2016	08:43:15	0.032	0.029
30-Mar-2016	08:47:15	0.027	0.028
30-Mar-2016	08:51:15	0.026	0.026
30-Mar-2016	08:55:15	0.026	0.027
30-Mar-2016	08:59:15	0.030	0.028
30-Mar-2016	09:03:15	0.029	0.029
30-Mar-2016	09:07:15	0.028	0.028
30-Mar-2016	09:11:15	0.026	0.027
30-Mar-2016	09:15:15	0.028	0.027
30-Mar-2016	09:19:15	0.027	0.027
30-Mar-2016	09:23:15	0.027	0.027
30-Mar-2016	09:27:15	0.027	0.029
30-Mar-2016	09:31:15	0.032	0.031
30-Mar-2016	09:35:15	0.033	0.033
30-Mar-2016	09:39:15	0.033	0.032
30-Mar-2016	09:43:15	0.031	0.032
30-Mar-2016	09:47:15	0.031	0.031
30-Mar-2016	09:51:15	0.032	0.030
30-Mar-2016	09:55:15	0.027	0.030
30-Mar-2016	09:59:15	0.032	0.029
30-Mar-2016	10:03:15	0.029	0.030
30-Mar-2016	10:07:15	0.029	0.034
30-Mar-2016	10:11:15	0.043	0.037
30-Mar-2016	10:15:15	0.038	0.039
30-Mar-2016	10:19:15	0.035	0.035
30-Mar-2016	10:23:15	0.031	0.033
30-Mar-2016	10:27:15	0.034	0.034
30-Mar-2016	10:31:15	0.038	0.037
30-Mar-2016	10:35:15	0.038	0.035
30-Mar-2016	10:39:15	0.030	0.034
30-Mar-2016	10:43:15	0.033	0.040
30-Mar-2016	10:47:15	0.057	0.042
30-Mar-2016	10:51:15	0.035	0.042

DUST MONITORING

March 2016

shading indicates values over the threshold

Monitor: 2

Threshold: 0.15 (mg/m^3)

Date	Time	Value (mg/m^3)	TWA (mg/m^3)
30-Mar-2016	10:55:15	0.033	0.033
30-Mar-2016	10:59:15	0.031	0.031
30-Mar-2016	11:03:15	0.029	0.031
30-Mar-2016	11:07:15	0.033	0.031
30-Mar-2016	11:11:15	0.031	0.031
30-Mar-2016	11:15:15	0.030	0.033
30-Mar-2016	11:19:15	0.038	0.033
30-Mar-2016	11:23:15	0.031	0.033
30-Mar-2016	11:27:15	0.029	0.030
30-Mar-2016	11:31:15	0.030	0.029
30-Mar-2016	11:35:15	0.029	0.030
30-Mar-2016	11:39:15	0.030	0.033
30-Mar-2016	11:43:15	0.041	0.035
30-Mar-2016	11:47:15	0.035	0.037
30-Mar-2016	11:51:15	0.035	0.033
30-Mar-2016	11:55:15	0.029	0.031
30-Mar-2016	11:59:15	0.030	0.031
30-Mar-2016	12:03:15	0.033	0.031
30-Mar-2016	12:07:15	0.030	0.032
30-Mar-2016	12:11:15	0.033	0.031
30-Mar-2016	12:15:15	0.030	0.030
30-Mar-2016	12:19:15	0.028	0.029
30-Mar-2016	12:23:15	0.029	0.028
30-Mar-2016	12:27:15	0.028	0.029
30-Mar-2016	12:31:15	0.029	0.028
30-Mar-2016	12:35:15	0.028	0.030
30-Mar-2016	12:39:15	0.033	0.031
30-Mar-2016	12:43:15	0.031	0.035
30-Mar-2016	12:47:15	0.040	0.035
30-Mar-2016	12:51:15	0.033	0.034
30-Mar-2016	12:55:15	0.030	0.031
30-Mar-2016	12:59:15	0.030	0.031
30-Mar-2016	13:03:15	0.034	0.032
30-Mar-2016	13:07:15	0.031	0.031
30-Mar-2016	13:11:15	0.029	0.031
30-Mar-2016	13:15:15	0.032	0.030
30-Mar-2016	13:19:15	0.030	0.032
30-Mar-2016	13:23:15	0.034	0.032
30-Mar-2016	13:27:15	0.032	0.033
30-Mar-2016	13:31:15	0.032	0.034
30-Mar-2016	13:35:15	0.038	0.034

DUST MONITORING

March 2016

shading indicates values over the threshold

Monitor: **2**

Threshold: **0.15 (mg/m^3)**

Date	Time	Value (mg/m^3)	TWA (mg/m^3)
30-Mar-2016	13:39:15	0.032	0.034
30-Mar-2016	13:43:15	0.033	0.034
30-Mar-2016	13:47:15	0.036	0.033
30-Mar-2016	13:51:15	0.029	0.032
30-Mar-2016	13:55:15	0.032	0.031
30-Mar-2016	13:59:15	0.033	0.033
30-Mar-2016	14:03:15	0.033	0.036
30-Mar-2016	14:07:15	0.042	0.035
30-Mar-2016	14:11:15	0.029	0.034
30-Mar-2016	14:15:15	0.031	0.031
30-Mar-2016	14:19:15	0.032	0.032
30-Mar-2016	14:23:15	0.034	0.032
30-Mar-2016	14:27:15	0.031	0.033
30-Mar-2016	14:31:15	0.034	0.032
30-Mar-2016	14:35:15	0.032	0.032
30-Mar-2016	14:39:15	0.029	0.031
30-Mar-2016	14:43:15	0.031	0.032
30-Mar-2016	14:47:15	0.035	0.036
30-Mar-2016	14:51:15	0.041	0.036
30-Mar-2016	14:55:15	0.031	0.036
30-Mar-2016	14:59:15	0.035	0.036
30-Mar-2016	15:03:15	0.041	0.037
30-Mar-2016	15:07:15	0.035	0.038
30-Mar-2016	15:11:15	0.037	0.036
30-Mar-2016	15:15:15	0.037	0.035
30-Mar-2016	15:19:15	0.031	0.034
30-Mar-2016	15:23:15	0.034	0.034
30-Mar-2016	15:27:15	0.037	0.036
30-Mar-2016	15:31:15	0.038	0.040
30-Mar-2016	15:35:15	0.046	0.042

DUST MONITORING

March 2016

shading indicates values over the threshold

Monitor: 3

Threshold: 0.15 (mg/m^3)

Date	Time	Value (mg/m^3)	TWA (mg/m^3)
3-Mar-2016	08:04:21	0.028	0.028
3-Mar-2016	08:08:21	0.028	0.027
3-Mar-2016	08:12:21	0.026	0.027
3-Mar-2016	08:16:21	0.026	0.026
3-Mar-2016	08:20:21	0.026	0.026
3-Mar-2016	08:24:21	0.026	0.026
3-Mar-2016	08:28:21	0.027	0.027
7-Mar-2016	09:18:25	0.031	0.029
7-Mar-2016	09:22:25	0.027	0.028
7-Mar-2016	09:26:25	0.027	0.028
7-Mar-2016	09:30:25	0.029	0.028
7-Mar-2016	09:34:25	0.029	0.029
7-Mar-2016	09:38:25	0.028	0.028
7-Mar-2016	09:42:25	0.027	0.027
7-Mar-2016	09:46:25	0.027	0.027
7-Mar-2016	09:50:25	0.027	0.028
7-Mar-2016	09:54:25	0.029	0.028
7-Mar-2016	09:58:25	0.029	0.028
7-Mar-2016	10:02:25	0.025	0.027
7-Mar-2016	10:06:25	0.026	0.027
7-Mar-2016	10:10:25	0.029	0.033
7-Mar-2016	10:14:25	0.043	0.033
7-Mar-2016	10:18:25	0.026	0.032
7-Mar-2016	10:22:25	0.026	0.028
7-Mar-2016	10:26:25	0.031	0.030
7-Mar-2016	10:30:25	0.033	0.030
7-Mar-2016	10:34:25	0.025	0.028
7-Mar-2016	10:38:25	0.027	0.026
7-Mar-2016	10:42:25	0.025	0.026
7-Mar-2016	10:46:25	0.025	0.025
7-Mar-2016	10:50:25	0.024	0.024
7-Mar-2016	10:54:25	0.024	0.025
7-Mar-2016	10:58:25	0.028	0.030
7-Mar-2016	11:02:25	0.037	0.030
7-Mar-2016	11:06:25	0.024	0.028
7-Mar-2016	11:10:25	0.024	0.024
7-Mar-2016	11:14:25	0.025	0.025
7-Mar-2016	11:18:25	0.025	0.029
7-Mar-2016	11:22:25	0.036	0.028
7-Mar-2016	11:26:25	0.023	0.028
7-Mar-2016	11:30:25	0.024	0.025

DUST MONITORING

March 2016

shading indicates values over the threshold

Monitor: 3

Threshold: 0.15 (mg/m^3)

Date	Time	Value (mg/m^3)	TWA (mg/m^3)
7-Mar-2016	11:34:25	0.027	0.037
7-Mar-2016	11:38:25	0.060	0.038
7-Mar-2016	11:42:25	0.027	0.038
7-Mar-2016	11:46:25	0.028	0.026
7-Mar-2016	11:50:25	0.023	0.025
7-Mar-2016	11:54:25	0.023	0.023
7-Mar-2016	11:58:25	0.023	0.023
7-Mar-2016	12:02:25	0.023	0.023
7-Mar-2016	12:06:25	0.023	0.023
7-Mar-2016	12:10:25	0.024	0.023
7-Mar-2016	12:14:25	0.023	0.023
7-Mar-2016	12:18:25	0.023	0.023
7-Mar-2016	12:22:25	0.023	0.023
7-Mar-2016	12:26:25	0.024	0.024
7-Mar-2016	12:30:25	0.024	0.024
7-Mar-2016	12:34:25	0.024	0.023
7-Mar-2016	12:38:25	0.022	0.023
7-Mar-2016	12:42:25	0.023	0.023
7-Mar-2016	12:46:25	0.023	0.024
7-Mar-2016	12:50:25	0.025	0.024
7-Mar-2016	12:54:25	0.023	0.024
7-Mar-2016	12:58:25	0.023	0.023
7-Mar-2016	13:02:25	0.024	0.030
7-Mar-2016	13:06:25	0.044	0.031
7-Mar-2016	13:10:25	0.025	0.035
7-Mar-2016	13:14:25	0.037	0.030
7-Mar-2016	13:18:25	0.027	0.029
7-Mar-2016	13:22:25	0.024	0.025
7-Mar-2016	13:26:25	0.024	0.025
7-Mar-2016	13:30:25	0.026	0.025
7-Mar-2016	13:34:25	0.024	0.025
7-Mar-2016	13:38:25	0.025	0.025
7-Mar-2016	13:42:25	0.026	0.026
7-Mar-2016	13:46:25	0.026	0.026
7-Mar-2016	13:50:25	0.025	0.034
7-Mar-2016	13:54:25	0.051	0.034
7-Mar-2016	13:58:25	0.027	0.037
7-Mar-2016	14:02:25	0.034	0.031
7-Mar-2016	14:06:25	0.033	0.034
7-Mar-2016	14:10:25	0.035	0.033
7-Mar-2016	14:14:25	0.032	0.042

DUST MONITORING

March 2016

shading indicates values over the threshold

Monitor: 3

Threshold: 0.15 (mg/m^3)

Date	Time	Value (mg/m^3)	TWA (mg/m^3)
7-Mar-2016	14:18:25	0.058	0.040
7-Mar-2016	14:22:25	0.031	0.040
7-Mar-2016	14:26:25	0.030	0.031
7-Mar-2016	14:30:25	0.032	0.032
7-Mar-2016	14:34:25	0.035	0.033
7-Mar-2016	14:38:25	0.031	0.032
7-Mar-2016	14:42:25	0.030	0.032
7-Mar-2016	14:46:25	0.035	0.031
7-Mar-2016	14:50:25	0.029	0.031
7-Mar-2016	14:54:25	0.029	0.030
7-Mar-2016	14:58:25	0.031	0.030
7-Mar-2016	15:02:25	0.030	0.030
7-Mar-2016	15:06:25	0.029	0.031
7-Mar-2016	15:10:25	0.033	0.031
7-Mar-2016	15:14:25	0.032	0.033
7-Mar-2016	15:18:25	0.035	0.033
7-Mar-2016	15:22:25	0.032	0.035
7-Mar-2016	15:26:25	0.038	0.036
7-Mar-2016	15:30:25	0.039	0.040
7-Mar-2016	15:34:25	0.042	0.040
7-Mar-2016	15:38:25	0.040	0.039
7-Mar-2016	15:42:25	0.035	0.037
7-Mar-2016	15:46:25	0.037	0.035
7-Mar-2016	15:50:25	0.034	0.035
7-Mar-2016	15:54:25	0.033	0.033
7-Mar-2016	15:58:25	0.033	0.050
7-Mar-2016	16:02:25	0.085	0.055
7-Mar-2016	16:06:25	0.046	0.055
7-Mar-2016	16:10:25	0.033	0.038
7-Mar-2016	16:14:25	0.034	0.033
7-Mar-2016	16:18:25	0.033	0.033
7-Mar-2016	16:22:25	0.033	0.038
7-Mar-2016	16:26:25	0.049	0.039
7-Mar-2016	16:30:25	0.034	0.039
7-Mar-2016	16:34:25	0.035	0.034
7-Mar-2016	16:38:25	0.033	0.034
7-Mar-2016	16:42:25	0.033	0.032
7-Mar-2016	16:46:25	0.031	0.032
7-Mar-2016	16:50:25	0.032	0.032
8-Mar-2016	08:17:23	0.074	0.064
8-Mar-2016	08:21:23	0.054	0.060

DUST MONITORING

March 2016

shading indicates values over the threshold

Monitor: 3

Threshold: 0.15 (mg/m^3)

Date	Time	Value (mg/m^3)	TWA (mg/m^3)
8-Mar-2016	08:25:23	0.051	0.052
8-Mar-2016	08:29:23	0.051	0.053
8-Mar-2016	08:33:23	0.057	0.054
8-Mar-2016	08:37:23	0.054	0.056
8-Mar-2016	08:41:23	0.056	0.054
8-Mar-2016	08:45:23	0.052	0.055
8-Mar-2016	08:49:23	0.057	0.054
8-Mar-2016	08:53:23	0.054	0.055
8-Mar-2016	08:57:23	0.054	0.054
8-Mar-2016	09:01:23	0.053	0.054
8-Mar-2016	09:05:23	0.054	0.054
8-Mar-2016	09:09:23	0.056	0.055
8-Mar-2016	09:13:23	0.056	0.056
8-Mar-2016	09:17:23	0.057	0.054
8-Mar-2016	09:21:23	0.050	0.052
8-Mar-2016	09:25:23	0.050	0.051
8-Mar-2016	09:29:23	0.054	0.050
8-Mar-2016	09:33:23	0.047	0.050
8-Mar-2016	09:37:23	0.049	0.048
8-Mar-2016	09:41:23	0.047	0.051
8-Mar-2016	09:45:23	0.057	0.051
8-Mar-2016	09:49:23	0.048	0.050
8-Mar-2016	09:53:23	0.046	0.047
8-Mar-2016	09:57:23	0.047	0.046
8-Mar-2016	10:01:23	0.046	0.046
8-Mar-2016	10:05:23	0.045	0.045
8-Mar-2016	10:09:23	0.043	0.047
8-Mar-2016	10:13:23	0.054	0.047
8-Mar-2016	10:17:23	0.045	0.048
8-Mar-2016	10:21:23	0.046	0.048
8-Mar-2016	10:25:23	0.052	0.047
8-Mar-2016	10:29:23	0.042	0.045
8-Mar-2016	10:33:23	0.040	0.041
8-Mar-2016	10:37:23	0.042	0.042
8-Mar-2016	10:41:23	0.043	0.043
8-Mar-2016	10:45:23	0.044	0.044
8-Mar-2016	10:49:23	0.046	0.044
8-Mar-2016	10:53:23	0.041	0.054
8-Mar-2016	10:57:23	0.076	0.053
8-Mar-2016	11:01:23	0.042	0.061
8-Mar-2016	11:05:23	0.064	0.049

DUST MONITORING

March 2016

shading indicates values over the threshold

Monitor: 3

Threshold: 0.15 (mg/m^3)

Date	Time	Value (mg/m^3)	TWA (mg/m^3)
8-Mar-2016	11:09:23	0.041	0.049
8-Mar-2016	11:13:23	0.043	0.042
8-Mar-2016	11:17:23	0.042	0.042
8-Mar-2016	11:21:23	0.040	0.040
8-Mar-2016	11:25:23	0.039	0.048
8-Mar-2016	11:29:23	0.066	0.048
8-Mar-2016	11:33:23	0.040	0.054
8-Mar-2016	11:37:23	0.055	0.044
8-Mar-2016	11:41:23	0.037	0.043
8-Mar-2016	11:45:23	0.038	0.037
8-Mar-2016	11:49:23	0.035	0.037
8-Mar-2016	11:53:23	0.037	0.035
8-Mar-2016	11:57:23	0.034	0.035
8-Mar-2016	12:01:23	0.034	0.035
8-Mar-2016	12:05:23	0.036	0.037
8-Mar-2016	12:09:23	0.042	0.038
8-Mar-2016	12:13:23	0.037	0.039
8-Mar-2016	12:17:23	0.039	0.038
8-Mar-2016	12:21:23	0.037	0.038
8-Mar-2016	12:25:23	0.037	0.037
8-Mar-2016	12:29:23	0.038	0.038
8-Mar-2016	12:33:23	0.039	0.039
8-Mar-2016	12:37:23	0.040	0.041
8-Mar-2016	12:41:23	0.043	0.041
8-Mar-2016	12:45:23	0.040	0.042
8-Mar-2016	12:49:23	0.043	0.044
8-Mar-2016	12:53:23	0.050	0.044
8-Mar-2016	12:57:23	0.040	0.046
8-Mar-2016	13:01:23	0.049	0.050
8-Mar-2016	13:05:23	0.060	0.051
8-Mar-2016	13:09:23	0.044	0.049
8-Mar-2016	13:13:23	0.044	0.044
8-Mar-2016	13:17:23	0.043	0.042
8-Mar-2016	13:21:23	0.040	0.041
8-Mar-2016	13:25:23	0.039	0.040
8-Mar-2016	13:29:23	0.041	0.041
8-Mar-2016	13:33:23	0.044	0.054
8-Mar-2016	13:37:23	0.076	0.063
8-Mar-2016	13:41:23	0.070	0.065
8-Mar-2016	13:45:23	0.049	0.053
8-Mar-2016	13:49:23	0.041	0.044

DUST MONITORING

March 2016

shading indicates values over the threshold

Monitor: 3

Threshold: 0.15 (mg/m^3)

Date	Time	Value (mg/m^3)	TWA (mg/m^3)
8-Mar-2016	13:53:23	0.041	0.042
8-Mar-2016	13:57:23	0.043	0.043
8-Mar-2016	14:01:23	0.044	0.043
8-Mar-2016	14:05:23	0.042	0.043
8-Mar-2016	14:09:23	0.042	0.042
8-Mar-2016	14:13:23	0.043	0.045
8-Mar-2016	14:17:23	0.051	0.045
8-Mar-2016	14:21:23	0.042	0.045
8-Mar-2016	14:25:23	0.042	0.042
8-Mar-2016	14:29:23	0.041	0.043
8-Mar-2016	14:33:23	0.045	0.043
8-Mar-2016	14:37:23	0.043	0.044
8-Mar-2016	14:41:23	0.044	0.046
8-Mar-2016	14:45:23	0.050	0.046
8-Mar-2016	14:49:23	0.044	0.047
8-Mar-2016	14:53:23	0.046	0.046
8-Mar-2016	14:57:23	0.047	0.046
8-Mar-2016	15:01:23	0.045	0.045
8-Mar-2016	15:05:23	0.043	0.043
8-Mar-2016	15:09:23	0.042	0.042
8-Mar-2016	15:13:23	0.042	0.044
8-Mar-2016	15:17:23	0.047	0.049
8-Mar-2016	15:21:23	0.058	0.051
8-Mar-2016	15:25:23	0.049	0.052
8-Mar-2016	15:29:23	0.048	0.047
8-Mar-2016	15:33:23	0.045	0.046
8-Mar-2016	15:37:23	0.044	0.044
8-Mar-2016	15:41:23	0.044	0.044
8-Mar-2016	15:45:23	0.044	0.044
8-Mar-2016	15:49:23	0.044	0.044
8-Mar-2016	15:53:23	0.044	0.044
8-Mar-2016	15:57:23	0.044	0.044
8-Mar-2016	16:01:23	0.044	0.045
8-Mar-2016	16:05:23	0.047	0.046
8-Mar-2016	16:09:23	0.046	0.047
8-Mar-2016	16:13:23	0.047	0.046
8-Mar-2016	16:17:23	0.044	0.046
8-Mar-2016	16:21:23	0.046	0.054
8-Mar-2016	16:25:23	0.071	0.059
9-Mar-2016	10:18:01	0.038	0.037
9-Mar-2016	10:22:01	0.036	0.041

DUST MONITORING

March 2016

shading indicates values over the threshold

Monitor: 3

Threshold: 0.15 (mg/m^3)

Date	Time	Value (mg/m^3)	TWA (mg/m^3)
9-Mar-2016	10:26:01	0.048	0.039
9-Mar-2016	10:30:01	0.034	0.046
9-Mar-2016	10:34:01	0.057	0.068
9-Mar-2016	10:38:01	0.113	0.151
9-Mar-2016	10:42:01	0.282	0.149
9-Mar-2016	10:46:01	0.051	0.129
9-Mar-2016	10:50:01	0.054	0.049
9-Mar-2016	10:54:01	0.041	0.051
9-Mar-2016	10:58:01	0.059	0.044
9-Mar-2016	11:02:01	0.033	0.043
9-Mar-2016	11:06:01	0.038	0.064
9-Mar-2016	11:10:01	0.121	0.065
9-Mar-2016	11:14:01	0.035	0.065
9-Mar-2016	11:18:01	0.038	0.035
9-Mar-2016	11:22:01	0.033	0.034
9-Mar-2016	11:26:01	0.032	0.054
9-Mar-2016	11:30:01	0.097	0.054
9-Mar-2016	11:34:01	0.032	0.059
9-Mar-2016	11:38:01	0.048	0.039
9-Mar-2016	11:42:01	0.036	0.039
9-Mar-2016	11:46:01	0.034	0.034
9-Mar-2016	11:50:01	0.033	0.034
9-Mar-2016	11:54:01	0.035	0.033
9-Mar-2016	11:58:01	0.031	0.032
9-Mar-2016	12:02:01	0.031	0.032
9-Mar-2016	12:06:01	0.033	0.035
9-Mar-2016	12:10:01	0.042	0.036
9-Mar-2016	12:14:01	0.032	0.035
9-Mar-2016	12:18:01	0.032	0.032
9-Mar-2016	12:22:01	0.033	0.032
9-Mar-2016	12:26:01	0.032	0.032
9-Mar-2016	12:30:01	0.031	0.031
9-Mar-2016	12:34:01	0.031	0.031
9-Mar-2016	12:38:01	0.031	0.031
9-Mar-2016	12:42:01	0.030	0.031
9-Mar-2016	12:46:01	0.032	0.031
9-Mar-2016	12:50:01	0.031	0.031
9-Mar-2016	12:54:01	0.029	0.037
9-Mar-2016	12:58:01	0.050	0.037
9-Mar-2016	13:02:01	0.032	0.038
9-Mar-2016	13:06:01	0.032	0.036

DUST MONITORING

March 2016

shading indicates values over the threshold

Monitor: 3

Threshold: 0.15 (mg/m^3)

Date	Time	Value (mg/m^3)	TWA (mg/m^3)
9-Mar-2016	13:10:01	0.045	0.041
9-Mar-2016	13:14:01	0.045	0.041
9-Mar-2016	13:18:01	0.034	0.041
9-Mar-2016	13:22:01	0.045	0.037
9-Mar-2016	13:26:01	0.031	0.036
9-Mar-2016	13:30:01	0.033	0.034
9-Mar-2016	13:34:01	0.037	0.033
9-Mar-2016	13:38:01	0.030	0.033
9-Mar-2016	13:42:01	0.033	0.033
9-Mar-2016	13:46:01	0.036	0.037
9-Mar-2016	13:50:01	0.042	0.040
9-Mar-2016	13:54:01	0.043	0.039
9-Mar-2016	13:58:01	0.031	0.035
9-Mar-2016	14:02:01	0.032	0.034
9-Mar-2016	14:06:01	0.039	0.035
9-Mar-2016	14:10:01	0.033	0.035
9-Mar-2016	14:14:01	0.034	0.034
9-Mar-2016	14:18:01	0.034	0.035
9-Mar-2016	14:22:01	0.037	0.034
9-Mar-2016	14:26:01	0.032	0.034
9-Mar-2016	14:30:01	0.032	0.035
9-Mar-2016	14:34:01	0.041	0.035
9-Mar-2016	14:38:01	0.032	0.035
9-Mar-2016	14:42:01	0.033	0.035
9-Mar-2016	14:46:01	0.041	0.042
9-Mar-2016	14:50:01	0.052	0.045
9-Mar-2016	14:54:01	0.041	0.043
9-Mar-2016	14:58:01	0.035	0.038
9-Mar-2016	15:02:01	0.039	0.035
9-Mar-2016	15:06:01	0.032	0.042
9-Mar-2016	15:10:01	0.054	0.047
9-Mar-2016	15:14:01	0.055	0.060
9-Mar-2016	15:18:01	0.071	0.071
9-Mar-2016	15:22:01	0.086	0.074
9-Mar-2016	15:26:01	0.064	0.062
9-Mar-2016	15:30:01	0.037	0.062
9-Mar-2016	15:34:01	0.085	0.053
9-Mar-2016	15:38:01	0.037	0.062
9-Mar-2016	15:42:01	0.063	0.066
9-Mar-2016	15:46:01	0.097	0.065
9-Mar-2016	15:50:01	0.036	0.062

DUST MONITORING

March 2016

shading indicates values over the threshold

Monitor: 3

Threshold: 0.15 (mg/m^3)

Date	Time	Value (mg/m^3)	TWA (mg/m^3)
9-Mar-2016	15:54:01	0.052	0.043
9-Mar-2016	15:58:01	0.041	0.045
9-Mar-2016	16:02:01	0.041	0.043
9-Mar-2016	16:06:01	0.047	0.041
9-Mar-2016	16:10:01	0.035	0.039
9-Mar-2016	16:14:01	0.035	0.038
9-Mar-2016	16:18:01	0.045	0.038
9-Mar-2016	16:22:01	0.035	0.038
9-Mar-2016	16:26:01	0.035	0.035
10-Mar-2016	08:31:54	0.045	0.044
10-Mar-2016	08:35:54	0.043	0.044
10-Mar-2016	08:39:54	0.043	0.044
10-Mar-2016	08:43:54	0.047	0.045
10-Mar-2016	08:47:54	0.045	0.045
10-Mar-2016	08:51:54	0.044	0.045
10-Mar-2016	08:55:54	0.045	0.050
10-Mar-2016	08:59:54	0.060	0.050
10-Mar-2016	09:03:54	0.044	0.054
10-Mar-2016	09:07:54	0.059	0.053
10-Mar-2016	09:11:54	0.055	0.090
10-Mar-2016	09:15:54	0.157	0.088
10-Mar-2016	09:19:54	0.051	0.090
10-Mar-2016	09:23:54	0.062	0.055
10-Mar-2016	09:27:54	0.051	0.055
10-Mar-2016	09:31:54	0.053	0.058
10-Mar-2016	09:35:54	0.071	0.057
10-Mar-2016	09:39:54	0.047	0.058
10-Mar-2016	09:43:54	0.056	0.052
10-Mar-2016	09:47:54	0.054	0.055
10-Mar-2016	09:51:54	0.056	0.052
10-Mar-2016	09:55:54	0.047	0.057
10-Mar-2016	09:59:54	0.069	0.055
10-Mar-2016	10:03:54	0.050	0.057
10-Mar-2016	10:07:54	0.051	0.048
10-Mar-2016	10:11:54	0.044	0.048
10-Mar-2016	10:15:54	0.048	0.046
10-Mar-2016	10:19:54	0.045	0.053
10-Mar-2016	10:23:54	0.065	0.053
10-Mar-2016	10:27:54	0.048	0.052
10-Mar-2016	10:31:54	0.044	0.078
10-Mar-2016	10:35:54	0.143	0.078

DUST MONITORING

March 2016

shading indicates values over the threshold

Monitor: 3

Threshold: 0.15 (mg/m^3)

Date	Time	Value (mg/m^3)	TWA (mg/m^3)
10-Mar-2016	10:39:54	0.047	0.080
10-Mar-2016	10:43:54	0.049	0.048
10-Mar-2016	10:47:54	0.047	0.047
10-Mar-2016	10:51:54	0.045	0.045
10-Mar-2016	10:55:54	0.044	0.047
10-Mar-2016	10:59:54	0.052	0.049
10-Mar-2016	11:03:54	0.051	0.050
10-Mar-2016	11:07:54	0.046	0.048
10-Mar-2016	11:11:54	0.046	0.066
10-Mar-2016	11:15:54	0.106	0.066
10-Mar-2016	11:19:54	0.045	0.070
10-Mar-2016	11:23:54	0.060	0.050
10-Mar-2016	11:27:54	0.045	0.059
10-Mar-2016	11:31:54	0.071	0.065
10-Mar-2016	11:35:54	0.078	0.072
10-Mar-2016	11:39:54	0.067	0.068
10-Mar-2016	11:43:54	0.060	0.058
10-Mar-2016	11:47:54	0.048	0.068
10-Mar-2016	11:51:54	0.096	0.067
10-Mar-2016	11:55:54	0.056	0.066
10-Mar-2016	11:59:54	0.047	0.049
10-Mar-2016	12:03:54	0.044	0.048
10-Mar-2016	12:07:54	0.052	0.047
10-Mar-2016	12:11:54	0.044	0.049
10-Mar-2016	12:15:54	0.051	0.047
10-Mar-2016	12:19:54	0.045	0.052
10-Mar-2016	12:23:54	0.059	0.050
10-Mar-2016	12:27:54	0.046	0.052
10-Mar-2016	12:31:54	0.050	0.048
10-Mar-2016	12:35:54	0.047	0.047
10-Mar-2016	12:39:54	0.044	0.046
10-Mar-2016	12:43:54	0.048	0.049
10-Mar-2016	12:47:54	0.054	0.051
10-Mar-2016	12:51:54	0.052	0.055
10-Mar-2016	12:55:54	0.060	0.053
10-Mar-2016	12:59:54	0.047	0.051
10-Mar-2016	13:03:54	0.047	0.046
10-Mar-2016	13:07:54	0.045	0.051
10-Mar-2016	13:11:54	0.060	0.054
10-Mar-2016	13:15:54	0.058	0.055
10-Mar-2016	13:19:54	0.048	0.056

DUST MONITORING

March 2016

shading indicates values over the threshold

Monitor: 3

Threshold: 0.15 (mg/m^3)

Date	Time	Value (mg/m^3)	TWA (mg/m^3)
10-Mar-2016	13:23:54	0.061	0.092
10-Mar-2016	13:27:54	0.167	0.103
10-Mar-2016	13:31:54	0.081	0.109
10-Mar-2016	13:35:54	0.080	0.082
10-Mar-2016	13:39:54	0.084	0.079
10-Mar-2016	13:43:54	0.073	0.073
10-Mar-2016	13:47:54	0.063	0.062
10-Mar-2016	13:51:54	0.050	0.059
10-Mar-2016	13:55:54	0.064	0.059
10-Mar-2016	13:59:54	0.063	0.061
10-Mar-2016	14:03:54	0.055	0.070
10-Mar-2016	14:07:54	0.091	0.080
10-Mar-2016	14:11:54	0.093	0.094
10-Mar-2016	14:15:54	0.097	0.085
10-Mar-2016	14:19:54	0.064	0.084
10-Mar-2016	14:23:54	0.092	0.069
10-Mar-2016	14:27:54	0.050	0.066
10-Mar-2016	14:31:54	0.055	0.054
10-Mar-2016	14:35:54	0.057	0.057
10-Mar-2016	14:39:54	0.058	0.064
10-Mar-2016	14:43:54	0.076	0.062
10-Mar-2016	14:47:54	0.053	0.060
10-Mar-2016	14:51:54	0.052	0.062
10-Mar-2016	14:55:54	0.082	0.063
10-Mar-2016	14:59:54	0.055	0.067
10-Mar-2016	15:03:54	0.064	0.062
10-Mar-2016	15:07:54	0.066	0.071
10-Mar-2016	15:11:54	0.082	0.066
10-Mar-2016	15:15:54	0.051	0.061
10-Mar-2016	15:19:54	0.051	0.053
10-Mar-2016	15:23:54	0.057	0.054
10-Mar-2016	15:27:54	0.055	0.053
10-Mar-2016	15:31:54	0.047	0.053
10-Mar-2016	15:35:54	0.057	0.051
10-Mar-2016	15:39:54	0.048	0.055
10-Mar-2016	15:43:54	0.061	0.055
10-Mar-2016	15:47:54	0.056	0.055
10-Mar-2016	15:51:54	0.049	0.051
10-Mar-2016	15:55:54	0.048	0.048
10-Mar-2016	15:59:54	0.048	0.053
10-Mar-2016	16:03:54	0.064	0.056

DUST MONITORING

March 2016

shading indicates values over the threshold

Monitor: 3

Threshold: 0.15 (mg/m^3)

Date	Time	Value (mg/m^3)	TWA (mg/m^3)
15-Mar-2016	15:10:36	0.043	0.044
15-Mar-2016	15:14:36	0.045	0.043
15-Mar-2016	15:18:36	0.042	0.042
15-Mar-2016	15:22:36	0.040	0.041
15-Mar-2016	15:26:36	0.041	0.041
15-Mar-2016	15:30:36	0.041	0.041
15-Mar-2016	15:34:36	0.040	0.040
15-Mar-2016	15:38:36	0.040	0.041
15-Mar-2016	15:42:36	0.042	0.041
15-Mar-2016	15:46:36	0.040	0.041
15-Mar-2016	15:50:36	0.040	0.040
15-Mar-2016	15:54:36	0.040	0.040
15-Mar-2016	15:58:36	0.041	0.041
15-Mar-2016	16:02:36	0.041	0.041
15-Mar-2016	16:06:36	0.041	0.042
15-Mar-2016	16:10:36	0.043	0.042
15-Mar-2016	16:14:36	0.041	0.042
17-Mar-2016	08:25:49	0.044	0.040
17-Mar-2016	08:29:49	0.036	0.039
17-Mar-2016	08:33:49	0.036	0.037
17-Mar-2016	08:37:49	0.039	0.039
17-Mar-2016	08:41:49	0.041	0.041
17-Mar-2016	08:45:49	0.042	0.041
17-Mar-2016	08:49:49	0.040	0.041
17-Mar-2016	08:53:49	0.041	0.040
17-Mar-2016	08:57:49	0.039	0.039
17-Mar-2016	09:01:49	0.037	0.037
17-Mar-2016	09:05:49	0.036	0.036
17-Mar-2016	09:09:49	0.036	0.037
17-Mar-2016	09:13:49	0.038	0.044
17-Mar-2016	09:17:49	0.057	0.047
17-Mar-2016	09:21:49	0.045	0.046
17-Mar-2016	09:25:49	0.037	0.040
17-Mar-2016	09:29:49	0.037	0.037
17-Mar-2016	09:33:49	0.037	0.044
17-Mar-2016	09:37:49	0.058	0.044
17-Mar-2016	09:41:49	0.037	0.044
17-Mar-2016	09:45:49	0.038	0.038
17-Mar-2016	09:49:49	0.039	0.039
17-Mar-2016	09:53:49	0.039	0.039
17-Mar-2016	09:57:49	0.039	0.039

DUST MONITORING

March 2016

shading indicates values over the threshold

Monitor: 3

Threshold: 0.15 (mg/m^3)

Date	Time	Value (mg/m^3)	TWA (mg/m^3)
17-Mar-2016	10:01:49	0.038	0.038
17-Mar-2016	10:05:49	0.037	0.043
17-Mar-2016	10:09:49	0.053	0.043
17-Mar-2016	10:13:49	0.038	0.043
17-Mar-2016	10:17:49	0.038	0.038
17-Mar-2016	10:21:49	0.037	0.037
17-Mar-2016	10:25:49	0.036	0.037
17-Mar-2016	10:29:49	0.038	0.037
17-Mar-2016	10:33:49	0.037	0.037
17-Mar-2016	10:37:49	0.037	0.037
17-Mar-2016	10:41:49	0.038	0.037
17-Mar-2016	10:45:49	0.037	0.044
17-Mar-2016	10:49:49	0.056	0.043
17-Mar-2016	10:53:49	0.037	0.046
17-Mar-2016	10:57:49	0.044	0.039
17-Mar-2016	11:01:49	0.035	0.040
17-Mar-2016	11:05:49	0.040	0.038
17-Mar-2016	11:09:49	0.038	0.038
17-Mar-2016	11:13:49	0.036	0.037
17-Mar-2016	11:17:49	0.036	0.036
17-Mar-2016	11:21:49	0.035	0.036
17-Mar-2016	11:25:49	0.036	0.036
17-Mar-2016	11:29:49	0.038	0.037
17-Mar-2016	11:33:49	0.036	0.036
17-Mar-2016	11:37:49	0.035	0.036
17-Mar-2016	11:41:49	0.036	0.062
17-Mar-2016	11:45:49	0.116	0.063
17-Mar-2016	11:49:49	0.036	0.067
17-Mar-2016	11:53:49	0.050	0.041
17-Mar-2016	11:57:49	0.036	0.041
17-Mar-2016	12:01:49	0.036	0.036
17-Mar-2016	12:05:49	0.036	0.036
17-Mar-2016	12:09:49	0.036	0.042
17-Mar-2016	12:13:49	0.053	0.096
17-Mar-2016	12:17:49	0.198	0.106
17-Mar-2016	12:21:49	0.067	0.101
17-Mar-2016	12:25:49	0.038	0.047
17-Mar-2016	12:29:49	0.037	0.038
17-Mar-2016	12:33:49	0.038	0.037
17-Mar-2016	12:37:49	0.037	0.037
17-Mar-2016	12:41:49	0.037	0.038

DUST MONITORING

March 2016

shading indicates values over the threshold

Monitor: 3

Threshold: 0.15 (mg/m^3)

Date	Time	Value (mg/m^3)	TWA (mg/m^3)
17-Mar-2016	12:45:49	0.041	0.038
17-Mar-2016	12:49:49	0.037	0.039
17-Mar-2016	12:53:49	0.039	0.038
17-Mar-2016	12:57:49	0.039	0.038
17-Mar-2016	13:01:49	0.037	0.038
17-Mar-2016	13:05:49	0.037	0.064
17-Mar-2016	13:09:49	0.117	0.064
17-Mar-2016	13:13:49	0.039	0.065
17-Mar-2016	13:17:49	0.040	0.043
17-Mar-2016	13:21:49	0.049	0.051
17-Mar-2016	13:25:49	0.065	0.057
17-Mar-2016	13:29:49	0.056	0.053
17-Mar-2016	13:33:49	0.038	0.044
17-Mar-2016	13:37:49	0.039	0.038
17-Mar-2016	13:41:49	0.037	0.049
17-Mar-2016	13:45:49	0.070	0.049
17-Mar-2016	13:49:49	0.039	0.049
17-Mar-2016	13:53:49	0.038	0.038
17-Mar-2016	13:57:49	0.038	0.038
17-Mar-2016	14:01:49	0.039	0.040
17-Mar-2016	14:05:49	0.042	0.040
17-Mar-2016	14:09:49	0.039	0.040
17-Mar-2016	14:13:49	0.039	0.039
17-Mar-2016	14:17:49	0.040	0.052
17-Mar-2016	14:21:49	0.078	0.052
17-Mar-2016	14:25:49	0.039	0.053
17-Mar-2016	14:29:49	0.041	0.040
17-Mar-2016	14:33:49	0.039	0.041
17-Mar-2016	14:37:49	0.043	0.041
17-Mar-2016	14:41:49	0.041	0.041
17-Mar-2016	14:45:49	0.039	0.040
17-Mar-2016	14:49:49	0.040	0.043
17-Mar-2016	14:53:49	0.050	0.047
17-Mar-2016	14:57:49	0.051	0.047
17-Mar-2016	15:01:49	0.041	0.044
17-Mar-2016	15:05:49	0.041	0.044
17-Mar-2016	15:09:49	0.049	0.043
17-Mar-2016	15:13:49	0.040	0.043
17-Mar-2016	15:17:49	0.041	0.041
17-Mar-2016	15:21:49	0.041	0.041
17-Mar-2016	15:25:49	0.041	0.041

DUST MONITORING

March 2016

shading indicates values over the threshold

Monitor: 3

Threshold: 0.15 (mg/m^3)

Date	Time	Value (mg/m^3)	TWA (mg/m^3)
17-Mar-2016	15:29:49	0.041	0.041
17-Mar-2016	15:33:49	0.041	0.041
17-Mar-2016	15:37:49	0.040	0.041
17-Mar-2016	15:41:49	0.043	0.042
17-Mar-2016	15:45:49	0.042	0.042
17-Mar-2016	15:49:49	0.042	0.042
18-Mar-2016	12:39:44	0.057	0.055
18-Mar-2016	12:43:44	0.052	0.054
18-Mar-2016	12:47:44	0.053	0.053
18-Mar-2016	12:51:44	0.054	0.052
18-Mar-2016	12:55:44	0.050	0.052
18-Mar-2016	12:59:44	0.051	0.051
18-Mar-2016	13:03:44	0.051	0.051
18-Mar-2016	13:07:44	0.050	0.051
18-Mar-2016	13:11:44	0.051	0.051
18-Mar-2016	13:15:44	0.051	0.051
18-Mar-2016	13:19:44	0.051	0.053
18-Mar-2016	13:23:44	0.056	0.053
18-Mar-2016	13:27:44	0.051	0.053
18-Mar-2016	13:31:44	0.051	0.051
18-Mar-2016	13:35:44	0.051	0.051
18-Mar-2016	13:39:44	0.051	0.051
18-Mar-2016	13:43:44	0.051	0.051
18-Mar-2016	13:47:44	0.050	0.051
18-Mar-2016	13:51:44	0.052	0.051
18-Mar-2016	13:55:44	0.051	0.051
18-Mar-2016	13:59:44	0.051	0.051
18-Mar-2016	14:03:44	0.051	0.051
18-Mar-2016	14:07:44	0.051	0.052
18-Mar-2016	14:11:44	0.054	0.053
18-Mar-2016	14:15:44	0.053	0.053
18-Mar-2016	14:19:44	0.053	0.054
18-Mar-2016	14:23:44	0.055	0.054
22-Mar-2016	08:48:34	0.019	0.019
22-Mar-2016	08:52:34	0.018	0.018
22-Mar-2016	08:56:34	0.016	0.016
22-Mar-2016	09:00:34	0.015	0.015
22-Mar-2016	09:04:34	0.013	0.014
22-Mar-2016	09:08:34	0.014	0.013
22-Mar-2016	09:12:34	0.011	0.012
22-Mar-2016	09:16:34	0.010	0.011

DUST MONITORING

March 2016

shading indicates values over the threshold

Monitor: 3

Threshold: 0.15 (mg/m^3)

Date	Time	Value (mg/m^3)	TWA (mg/m^3)
22-Mar-2016	09:20:34	0.011	0.011
22-Mar-2016	09:24:34	0.011	0.010
22-Mar-2016	09:28:34	0.009	0.010
22-Mar-2016	09:32:34	0.010	0.009
22-Mar-2016	09:36:34	0.009	0.010
22-Mar-2016	09:40:34	0.011	0.008
22-Mar-2016	09:44:34	0.005	0.007
22-Mar-2016	09:48:34	0.005	0.005
22-Mar-2016	09:52:34	0.004	0.005
22-Mar-2016	09:56:34	0.005	0.004
22-Mar-2016	10:00:34	0.004	0.005
22-Mar-2016	10:04:34	0.005	0.005
22-Mar-2016	10:08:34	0.006	0.005
22-Mar-2016	10:12:34	0.005	0.005
22-Mar-2016	10:16:34	0.005	0.005
22-Mar-2016	10:20:34	0.006	0.006
22-Mar-2016	10:24:34	0.006	0.007
22-Mar-2016	10:28:34	0.009	0.008
22-Mar-2016	10:32:34	0.009	0.008
22-Mar-2016	10:36:34	0.005	0.006
22-Mar-2016	10:40:34	0.005	0.005
22-Mar-2016	10:44:34	0.006	0.005
22-Mar-2016	10:48:34	0.005	0.005
22-Mar-2016	10:52:34	0.005	0.006
22-Mar-2016	10:56:34	0.008	0.006
22-Mar-2016	11:00:34	0.006	0.007
22-Mar-2016	11:04:34	0.007	0.006
22-Mar-2016	11:08:34	0.006	0.006
22-Mar-2016	11:12:34	0.004	0.006
22-Mar-2016	11:16:34	0.009	0.006
22-Mar-2016	11:20:34	0.006	0.007
22-Mar-2016	11:24:34	0.006	0.006
22-Mar-2016	11:28:34	0.005	0.006
22-Mar-2016	11:32:34	0.006	0.006
22-Mar-2016	11:36:34	0.008	0.006
22-Mar-2016	11:40:34	0.005	0.006
22-Mar-2016	11:44:34	0.006	0.006
22-Mar-2016	11:48:34	0.006	0.005
22-Mar-2016	11:52:34	0.004	0.005
22-Mar-2016	11:56:34	0.005	0.005
22-Mar-2016	12:00:34	0.005	0.006

DUST MONITORING

March 2016

shading indicates values over the threshold

Monitor: 3

Threshold: 0.15 (mg/m^3)

Date	Time	Value (mg/m^3)	TWA (mg/m^3)
22-Mar-2016	12:04:34	0.007	0.006
22-Mar-2016	12:08:34	0.005	0.006
22-Mar-2016	12:12:34	0.006	0.005
22-Mar-2016	12:16:34	0.004	0.005
22-Mar-2016	12:20:34	0.005	0.005
22-Mar-2016	12:24:34	0.005	0.006
22-Mar-2016	12:28:34	0.008	0.006
22-Mar-2016	12:32:34	0.004	0.006
22-Mar-2016	12:36:34	0.005	0.004
22-Mar-2016	12:40:34	0.004	0.005
22-Mar-2016	12:44:34	0.005	0.005
22-Mar-2016	12:48:34	0.005	0.005
22-Mar-2016	12:52:34	0.005	0.005
22-Mar-2016	12:56:34	0.005	0.005
22-Mar-2016	13:00:34	0.005	0.005
22-Mar-2016	13:04:34	0.005	0.006
22-Mar-2016	13:08:34	0.007	0.006
22-Mar-2016	13:12:34	0.006	0.007
22-Mar-2016	13:16:34	0.007	0.006
22-Mar-2016	13:20:34	0.006	0.006
22-Mar-2016	13:24:34	0.005	0.008
22-Mar-2016	13:28:34	0.012	0.007
22-Mar-2016	13:32:34	0.005	0.008
22-Mar-2016	13:36:34	0.006	0.006
22-Mar-2016	13:40:34	0.007	0.006
22-Mar-2016	13:44:34	0.006	0.007
22-Mar-2016	13:48:34	0.007	0.008
22-Mar-2016	13:52:34	0.012	0.009
22-Mar-2016	13:56:34	0.009	0.010
22-Mar-2016	14:00:34	0.008	0.008
22-Mar-2016	14:04:34	0.008	0.008
22-Mar-2016	14:08:34	0.008	0.008
22-Mar-2016	14:12:34	0.008	0.008
22-Mar-2016	14:16:34	0.008	0.007
22-Mar-2016	14:20:34	0.006	0.007
22-Mar-2016	14:24:34	0.008	0.008
22-Mar-2016	14:28:34	0.010	0.008
22-Mar-2016	14:32:34	0.006	0.008
22-Mar-2016	14:36:34	0.008	0.007
22-Mar-2016	14:40:34	0.006	0.007
22-Mar-2016	14:44:34	0.008	0.007

DUST MONITORING

March 2016

shading indicates values over the threshold

Monitor: 3

Threshold: 0.15 (mg/m^3)

Date	Time	Value (mg/m^3)	TWA (mg/m^3)
23-Mar-2016	07:10:34	0.009	0.009
23-Mar-2016	07:14:34	0.009	0.009
23-Mar-2016	07:18:34	0.009	0.010
23-Mar-2016	07:22:34	0.011	0.013
23-Mar-2016	07:26:34	0.019	0.013
23-Mar-2016	07:30:34	0.009	0.012
23-Mar-2016	07:34:34	0.008	0.009
23-Mar-2016	07:38:34	0.009	0.012
23-Mar-2016	07:42:34	0.020	0.013
23-Mar-2016	07:46:34	0.009	0.028
23-Mar-2016	07:50:34	0.054	0.024
23-Mar-2016	07:54:34	0.010	0.024
23-Mar-2016	07:58:34	0.009	0.012
23-Mar-2016	08:02:34	0.016	0.012
23-Mar-2016	08:06:34	0.010	0.014
23-Mar-2016	08:10:34	0.017	0.016
23-Mar-2016	08:14:34	0.021	0.017
23-Mar-2016	08:18:34	0.012	0.015
23-Mar-2016	08:22:34	0.011	0.013
23-Mar-2016	08:26:34	0.017	0.016
23-Mar-2016	08:30:34	0.021	0.019
23-Mar-2016	08:34:34	0.018	0.016
23-Mar-2016	08:38:34	0.009	0.012
23-Mar-2016	08:42:34	0.009	0.011
23-Mar-2016	08:46:34	0.015	0.014
23-Mar-2016	08:50:34	0.019	0.015
23-Mar-2016	08:54:34	0.012	0.014
23-Mar-2016	08:58:34	0.011	0.011
23-Mar-2016	09:02:34	0.010	0.011
23-Mar-2016	09:06:34	0.013	0.011
23-Mar-2016	09:10:34	0.011	0.012
23-Mar-2016	09:14:34	0.012	0.011
23-Mar-2016	09:18:34	0.011	0.011
23-Mar-2016	09:22:34	0.011	0.011
23-Mar-2016	09:26:34	0.011	0.011
23-Mar-2016	09:30:34	0.011	0.011
23-Mar-2016	09:34:34	0.012	0.012
23-Mar-2016	09:38:34	0.013	0.012
23-Mar-2016	09:42:34	0.012	0.021
23-Mar-2016	09:46:34	0.037	0.020
23-Mar-2016	09:50:34	0.011	0.020

DUST MONITORING

March 2016

shading indicates values over the threshold

Monitor: 3

Threshold: 0.15 (mg/m^3)

Date	Time	Value (mg/m^3)	TWA (mg/m^3)
23-Mar-2016	09:54:34	0.013	0.012
23-Mar-2016	09:58:34	0.013	0.012
23-Mar-2016	10:02:34	0.010	0.011
23-Mar-2016	10:06:34	0.011	0.010
23-Mar-2016	10:10:34	0.010	0.011
23-Mar-2016	10:14:34	0.013	0.012
23-Mar-2016	10:18:34	0.014	0.019
23-Mar-2016	10:22:34	0.031	0.019
23-Mar-2016	10:26:34	0.011	0.017
23-Mar-2016	10:30:34	0.010	0.010
23-Mar-2016	10:34:34	0.010	0.011
23-Mar-2016	10:38:34	0.014	0.013
23-Mar-2016	10:42:34	0.014	0.013
23-Mar-2016	10:46:34	0.010	0.012
23-Mar-2016	10:50:34	0.011	0.011
23-Mar-2016	10:54:34	0.013	0.018
23-Mar-2016	10:58:34	0.029	0.018
23-Mar-2016	11:02:34	0.011	0.017
23-Mar-2016	11:06:34	0.011	0.011
23-Mar-2016	11:10:34	0.010	0.010
23-Mar-2016	11:14:34	0.010	0.013
23-Mar-2016	11:18:34	0.019	0.015
23-Mar-2016	11:22:34	0.016	0.015
23-Mar-2016	11:26:34	0.011	0.012
23-Mar-2016	11:30:34	0.009	0.035
23-Mar-2016	11:34:34	0.084	0.049
23-Mar-2016	11:38:34	0.053	0.078
23-Mar-2016	11:42:34	0.097	0.054
23-Mar-2016	11:46:34	0.012	0.040
23-Mar-2016	11:50:34	0.012	0.014
23-Mar-2016	11:54:34	0.017	0.013
23-Mar-2016	11:58:34	0.011	0.013
23-Mar-2016	12:02:34	0.011	0.011
23-Mar-2016	12:06:34	0.011	0.011
23-Mar-2016	12:10:34	0.010	0.010
23-Mar-2016	12:14:34	0.009	0.010
23-Mar-2016	12:18:34	0.010	0.009
23-Mar-2016	12:22:34	0.009	0.012
23-Mar-2016	12:26:34	0.017	0.012
23-Mar-2016	12:30:34	0.011	0.013
23-Mar-2016	12:34:34	0.010	0.011

DUST MONITORING

March 2016

shading indicates values over the threshold

Monitor: 3

Threshold: 0.15 (mg/m^3)

Date	Time	Value (mg/m^3)	TWA (mg/m^3)
23-Mar-2016	12:38:34	0.013	0.012
23-Mar-2016	12:42:34	0.014	0.019
23-Mar-2016	12:46:34	0.029	0.018
23-Mar-2016	12:50:34	0.011	0.021
23-Mar-2016	12:54:34	0.024	0.015
23-Mar-2016	12:58:34	0.010	0.015
23-Mar-2016	13:02:34	0.010	0.011
23-Mar-2016	13:06:34	0.013	0.011
23-Mar-2016	13:10:34	0.009	0.011
23-Mar-2016	13:14:34	0.011	0.012
23-Mar-2016	13:18:34	0.015	0.013
23-Mar-2016	13:22:34	0.013	0.014
23-Mar-2016	13:26:34	0.013	0.012
23-Mar-2016	13:30:34	0.010	0.011
23-Mar-2016	13:34:34	0.009	0.010
23-Mar-2016	13:38:34	0.010	0.010
23-Mar-2016	13:42:34	0.011	0.012
23-Mar-2016	13:46:34	0.015	0.022
23-Mar-2016	13:50:34	0.039	0.021
23-Mar-2016	13:54:34	0.009	0.020
23-Mar-2016	13:58:34	0.012	0.010
23-Mar-2016	14:02:34	0.010	0.011
23-Mar-2016	14:06:34	0.012	0.037
23-Mar-2016	14:10:34	0.088	0.038
23-Mar-2016	14:14:34	0.013	0.038
23-Mar-2016	14:18:34	0.014	0.014
23-Mar-2016	14:22:34	0.015	0.014
23-Mar-2016	14:26:34	0.013	0.015
23-Mar-2016	14:30:34	0.016	0.014
23-Mar-2016	14:34:34	0.014	0.015
23-Mar-2016	14:38:34	0.016	0.015
23-Mar-2016	14:42:34	0.014	0.016
23-Mar-2016	14:46:34	0.017	0.015
23-Mar-2016	14:50:34	0.014	0.015
23-Mar-2016	14:54:34	0.013	0.025
23-Mar-2016	14:58:34	0.048	0.025
23-Mar-2016	15:02:34	0.014	0.026
23-Mar-2016	15:06:34	0.016	0.015
23-Mar-2016	15:10:34	0.016	0.017
23-Mar-2016	15:14:34	0.020	0.020
23-Mar-2016	15:18:34	0.023	0.024

DUST MONITORING

March 2016

shading indicates values over the threshold

Monitor: 3

Threshold: 0.15 (mg/m^3)

Date	Time	Value (mg/m^3)	TWA (mg/m^3)
23-Mar-2016	15:22:34	0.028	0.023
23-Mar-2016	15:26:34	0.018	0.021
23-Mar-2016	15:30:34	0.018	0.018
23-Mar-2016	15:34:34	0.017	0.018
23-Mar-2016	15:38:34	0.019	0.018
23-Mar-2016	15:42:34	0.019	0.018
23-Mar-2016	15:46:34	0.015	0.022
23-Mar-2016	15:50:34	0.032	0.021
23-Mar-2016	15:54:34	0.017	0.022
23-Mar-2016	15:58:34	0.017	0.017
23-Mar-2016	16:02:34	0.016	0.017
24-Mar-2016	07:41:32	0.018	0.019
24-Mar-2016	07:45:32	0.020	0.019
24-Mar-2016	07:49:32	0.019	0.020
24-Mar-2016	07:53:32	0.020	0.020
24-Mar-2016	07:57:32	0.020	0.020
24-Mar-2016	08:01:32	0.020	0.020
24-Mar-2016	08:05:32	0.019	0.020
24-Mar-2016	08:09:32	0.020	0.019
24-Mar-2016	08:13:32	0.019	0.020
24-Mar-2016	08:17:32	0.021	0.020
24-Mar-2016	08:21:32	0.019	0.020
24-Mar-2016	08:25:32	0.021	0.020
24-Mar-2016	08:29:32	0.019	0.020
24-Mar-2016	08:33:32	0.021	0.020
24-Mar-2016	08:37:32	0.019	0.020
28-Mar-2016	15:15:16	0.025	0.024
28-Mar-2016	15:19:16	0.022	0.022
28-Mar-2016	15:23:16	0.019	0.021
28-Mar-2016	15:27:16	0.022	0.021
28-Mar-2016	15:31:16	0.023	0.021
28-Mar-2016	15:35:16	0.018	0.020
28-Mar-2016	15:39:16	0.019	0.020
28-Mar-2016	15:43:16	0.024	0.025
28-Mar-2016	15:47:16	0.032	0.028
29-Mar-2016	10:17:24	0.013	0.013
29-Mar-2016	10:21:24	0.013	0.012
29-Mar-2016	10:25:24	0.010	0.011
29-Mar-2016	10:29:24	0.010	0.011
29-Mar-2016	10:33:24	0.012	0.011
29-Mar-2016	10:37:24	0.011	0.011

DUST MONITORING

March 2016

shading indicates values over the threshold

Monitor: 3

Threshold: 0.15 (mg/m^3)

Date	Time	Value (mg/m^3)	TWA (mg/m^3)
29-Mar-2016	10:41:24	0.009	0.010
29-Mar-2016	10:45:24	0.009	0.009
29-Mar-2016	10:49:24	0.008	0.009
29-Mar-2016	10:53:24	0.009	0.008
29-Mar-2016	10:57:24	0.008	0.009
29-Mar-2016	11:01:24	0.010	0.009
29-Mar-2016	11:05:24	0.008	0.009
29-Mar-2016	11:09:24	0.009	0.009
29-Mar-2016	11:13:24	0.009	0.009
29-Mar-2016	11:17:24	0.009	0.009
29-Mar-2016	11:21:24	0.010	0.009
29-Mar-2016	11:25:24	0.009	0.009
29-Mar-2016	11:29:24	0.008	0.009
29-Mar-2016	11:33:24	0.011	0.010
29-Mar-2016	11:37:24	0.010	0.011
29-Mar-2016	11:41:24	0.011	0.011
29-Mar-2016	11:45:24	0.011	0.010
29-Mar-2016	11:49:24	0.008	0.009
29-Mar-2016	11:53:24	0.009	0.009
29-Mar-2016	11:57:24	0.010	0.010
29-Mar-2016	12:01:24	0.010	0.010
29-Mar-2016	12:05:24	0.011	0.010
29-Mar-2016	12:09:24	0.010	0.014
29-Mar-2016	12:13:24	0.022	0.014
29-Mar-2016	12:17:24	0.011	0.016
29-Mar-2016	12:21:24	0.014	0.014
29-Mar-2016	12:25:24	0.017	0.014
29-Mar-2016	12:29:24	0.010	0.012
29-Mar-2016	12:33:24	0.009	0.013
29-Mar-2016	12:37:24	0.019	0.013
29-Mar-2016	12:41:24	0.010	0.015
29-Mar-2016	12:45:24	0.015	0.012
29-Mar-2016	12:49:24	0.010	0.011
29-Mar-2016	12:53:24	0.009	0.009
29-Mar-2016	12:57:24	0.008	0.009
29-Mar-2016	13:01:24	0.010	0.009
29-Mar-2016	13:05:24	0.008	0.009
29-Mar-2016	13:09:24	0.010	0.010
29-Mar-2016	13:13:24	0.011	0.010
29-Mar-2016	13:17:24	0.009	0.010
29-Mar-2016	13:21:24	0.011	0.009

DUST MONITORING

March 2016

shading indicates values over the threshold

Monitor: 3

Threshold: 0.15 (mg/m^3)

Date	Time	Value (mg/m^3)	TWA (mg/m^3)
29-Mar-2016	13:25:24	0.008	0.009
29-Mar-2016	13:29:24	0.009	0.009
29-Mar-2016	13:33:24	0.010	0.010
29-Mar-2016	13:37:24	0.010	0.010
29-Mar-2016	13:41:24	0.009	0.009
29-Mar-2016	13:45:24	0.009	0.009
29-Mar-2016	13:49:24	0.009	0.011
29-Mar-2016	13:53:24	0.015	0.013
29-Mar-2016	13:57:24	0.015	0.013
29-Mar-2016	14:01:24	0.009	0.011
29-Mar-2016	14:05:24	0.008	0.009
29-Mar-2016	14:09:24	0.009	0.008
29-Mar-2016	14:13:24	0.008	0.008
29-Mar-2016	14:17:24	0.007	0.008
29-Mar-2016	14:21:24	0.009	0.008
29-Mar-2016	14:25:24	0.009	0.009
29-Mar-2016	14:29:24	0.009	0.009
29-Mar-2016	14:33:24	0.009	0.010
29-Mar-2016	14:37:24	0.011	0.009
29-Mar-2016	14:41:24	0.008	0.010
29-Mar-2016	14:45:24	0.010	0.010
29-Mar-2016	14:49:24	0.011	0.013
29-Mar-2016	14:53:24	0.017	0.013
29-Mar-2016	14:57:24	0.011	0.012
29-Mar-2016	15:01:24	0.009	0.010
29-Mar-2016	15:05:24	0.011	0.017
29-Mar-2016	15:09:24	0.031	0.017
29-Mar-2016	15:13:24	0.009	0.018
29-Mar-2016	15:17:24	0.013	0.010
29-Mar-2016	15:21:24	0.009	0.010
29-Mar-2016	15:25:24	0.009	0.009
29-Mar-2016	15:29:24	0.010	0.009
29-Mar-2016	15:33:24	0.009	0.010
29-Mar-2016	15:37:24	0.010	0.009
29-Mar-2016	15:41:24	0.009	0.009
29-Mar-2016	15:45:24	0.009	0.009
29-Mar-2016	15:49:24	0.010	0.009
29-Mar-2016	15:53:24	0.009	0.012
29-Mar-2016	15:57:24	0.018	0.013
29-Mar-2016	16:01:24	0.011	0.016
29-Mar-2016	16:05:24	0.019	0.020

DUST MONITORING

March 2016

shading indicates values over the threshold

Monitor: 3

Threshold: 0.15 (mg/m^3)

Date	Time	Value (mg/m^3)	TWA (mg/m^3)
29-Mar-2016	16:09:24	0.029	0.020
29-Mar-2016	16:13:24	0.011	0.020
29-Mar-2016	16:17:24	0.021	0.014
29-Mar-2016	16:21:24	0.009	0.013
29-Mar-2016	16:25:24	0.009	0.011
29-Mar-2016	16:29:24	0.015	0.011
29-Mar-2016	16:33:24	0.010	0.011
29-Mar-2016	16:37:24	0.009	0.010
29-Mar-2016	16:41:24	0.010	0.009
29-Mar-2016	16:45:24	0.009	0.009
29-Mar-2016	16:49:24	0.009	0.009
29-Mar-2016	16:53:24	0.009	0.009
29-Mar-2016	16:57:24	0.010	0.010
29-Mar-2016	17:01:24	0.010	0.010
29-Mar-2016	17:05:24	0.010	0.010
29-Mar-2016	17:09:24	0.011	0.010
29-Mar-2016	17:13:24	0.010	0.010
29-Mar-2016	17:17:24	0.009	0.010
29-Mar-2016	17:21:24	0.010	0.009
29-Mar-2016	17:25:24	0.009	0.009
29-Mar-2016	17:29:24	0.009	0.009
29-Mar-2016	17:33:24	0.009	0.009
29-Mar-2016	17:37:24	0.010	0.010
29-Mar-2016	17:41:24	0.010	0.011
29-Mar-2016	17:45:24	0.012	0.011
29-Mar-2016	17:49:24	0.010	0.011
29-Mar-2016	17:53:24	0.010	0.010
29-Mar-2016	17:57:24	0.010	0.010
29-Mar-2016	18:01:24	0.009	0.009
29-Mar-2016	18:05:24	0.009	0.009
29-Mar-2016	18:09:24	0.010	0.010
29-Mar-2016	18:13:24	0.010	0.010
29-Mar-2016	18:17:24	0.009	0.009
29-Mar-2016	18:21:24	0.009	0.009
29-Mar-2016	18:25:24	0.010	0.010
29-Mar-2016	18:29:24	0.010	0.010
29-Mar-2016	18:33:24	0.009	0.009
29-Mar-2016	18:37:24	0.009	0.010
29-Mar-2016	18:41:24	0.011	0.010
29-Mar-2016	18:45:24	0.010	0.011
29-Mar-2016	18:49:24	0.011	0.011

DUST MONITORING

March 2016

shading indicates values over the threshold

Monitor: 3

Threshold: 0.15 (mg/m^3)

Date	Time	Value (mg/m^3)	TWA (mg/m^3)
29-Mar-2016	18:53:24	0.011	0.011
29-Mar-2016	18:57:24	0.010	0.012
29-Mar-2016	19:01:24	0.016	0.012
29-Mar-2016	19:05:24	0.011	0.013
29-Mar-2016	19:09:24	0.011	0.011
29-Mar-2016	19:13:24	0.011	0.011
29-Mar-2016	19:17:24	0.011	0.011
29-Mar-2016	19:21:24	0.012	0.012
29-Mar-2016	19:25:24	0.012	0.012
29-Mar-2016	19:29:24	0.013	0.012
29-Mar-2016	19:33:24	0.011	0.012
29-Mar-2016	19:37:24	0.013	0.013
29-Mar-2016	19:41:24	0.014	0.013
29-Mar-2016	19:45:24	0.012	0.012
29-Mar-2016	19:49:24	0.011	0.012
29-Mar-2016	19:53:24	0.014	0.012
29-Mar-2016	19:57:24	0.012	0.013
29-Mar-2016	20:01:24	0.013	0.013
29-Mar-2016	20:05:24	0.013	0.013
29-Mar-2016	20:09:24	0.013	0.013
29-Mar-2016	20:13:24	0.013	0.015
29-Mar-2016	20:17:24	0.020	0.016
29-Mar-2016	20:21:24	0.016	0.017
29-Mar-2016	20:25:24	0.014	0.015
29-Mar-2016	20:29:24	0.015	0.016
29-Mar-2016	20:33:24	0.019	0.018
29-Mar-2016	20:37:24	0.019	0.019
29-Mar-2016	20:41:24	0.018	0.018
29-Mar-2016	20:45:24	0.018	0.018
29-Mar-2016	20:49:24	0.017	0.019
29-Mar-2016	20:53:24	0.022	0.018
29-Mar-2016	20:57:24	0.015	0.019
29-Mar-2016	21:01:24	0.020	0.018
29-Mar-2016	21:05:24	0.018	0.018
29-Mar-2016	21:09:24	0.015	0.017
29-Mar-2016	21:13:24	0.018	0.016
29-Mar-2016	21:17:24	0.014	0.024
29-Mar-2016	21:21:24	0.039	0.031
29-Mar-2016	21:25:24	0.039	0.032
29-Mar-2016	21:29:24	0.018	0.026
29-Mar-2016	21:33:24	0.022	0.019

DUST MONITORING

March 2016

shading indicates values over the threshold

Monitor: 3

Threshold: 0.15 (mg/m^3)

Date	Time	Value (mg/m^3)	TWA (mg/m^3)
29-Mar-2016	21:37:24	0.017	0.020
29-Mar-2016	21:41:24	0.021	0.022
29-Mar-2016	21:45:24	0.027	0.024
29-Mar-2016	21:49:24	0.024	0.023
29-Mar-2016	21:53:24	0.017	0.018
29-Mar-2016	21:57:24	0.013	0.015
29-Mar-2016	22:01:24	0.016	0.014
29-Mar-2016	22:05:24	0.012	0.013
29-Mar-2016	22:09:24	0.012	0.013
29-Mar-2016	22:13:24	0.014	0.015
29-Mar-2016	22:17:24	0.018	0.015
29-Mar-2016	22:21:24	0.012	0.015
29-Mar-2016	22:25:24	0.016	0.016
29-Mar-2016	22:29:24	0.019	0.019
29-Mar-2016	22:33:24	0.022	0.018
29-Mar-2016	22:37:24	0.014	0.017
29-Mar-2016	22:41:24	0.014	0.014
29-Mar-2016	22:45:24	0.014	0.017
29-Mar-2016	22:49:24	0.022	0.017
29-Mar-2016	22:53:24	0.016	0.019
29-Mar-2016	22:57:24	0.018	0.018
29-Mar-2016	23:01:24	0.020	0.019
29-Mar-2016	23:05:24	0.018	0.020
29-Mar-2016	23:09:24	0.023	0.023
29-Mar-2016	23:13:24	0.027	0.024
29-Mar-2016	23:17:24	0.022	0.025
29-Mar-2016	23:21:24	0.027	0.027
29-Mar-2016	23:25:24	0.031	0.031
29-Mar-2016	23:29:24	0.035	0.032
29-Mar-2016	23:33:24	0.029	0.032
29-Mar-2016	23:37:24	0.033	0.032
29-Mar-2016	23:41:24	0.035	0.035
29-Mar-2016	23:45:24	0.036	0.035
29-Mar-2016	23:49:24	0.033	0.033
29-Mar-2016	23:53:24	0.031	0.032
29-Mar-2016	23:57:24	0.031	0.031
30-Mar-2016	00:01:24	0.033	0.033
30-Mar-2016	00:05:24	0.032	0.033
30-Mar-2016	00:09:24	0.034	0.029
30-Mar-2016	07:38:39	0.022	0.025
30-Mar-2016	07:42:39	0.020	0.021

DUST MONITORING

March 2016

shading indicates values over the threshold

Monitor: 3

Threshold: 0.15 (mg/m^3)

Date	Time	Value (mg/m^3)	TWA (mg/m^3)
30-Mar-2016	07:46:39	0.020	0.020
30-Mar-2016	07:50:39	0.020	0.020
30-Mar-2016	07:54:39	0.019	0.020
30-Mar-2016	07:58:39	0.020	0.020
30-Mar-2016	08:02:39	0.020	0.020
30-Mar-2016	08:06:39	0.019	0.019
30-Mar-2016	08:10:39	0.019	0.019
30-Mar-2016	08:14:39	0.018	0.018
30-Mar-2016	08:18:39	0.018	0.019
30-Mar-2016	08:22:39	0.020	0.020
30-Mar-2016	08:26:39	0.021	0.020
30-Mar-2016	08:30:39	0.018	0.019
30-Mar-2016	08:34:39	0.018	0.018
30-Mar-2016	08:38:39	0.017	0.018
30-Mar-2016	08:42:39	0.019	0.018
30-Mar-2016	08:46:39	0.019	0.020
30-Mar-2016	08:50:39	0.022	0.021
30-Mar-2016	08:54:39	0.023	0.021
30-Mar-2016	08:58:39	0.018	0.020
30-Mar-2016	09:02:39	0.018	0.018
30-Mar-2016	09:06:39	0.017	0.020
30-Mar-2016	09:10:39	0.025	0.020
30-Mar-2016	09:14:39	0.018	0.021
30-Mar-2016	09:18:39	0.019	0.020
30-Mar-2016	09:22:39	0.024	0.021
30-Mar-2016	09:26:39	0.021	0.024
30-Mar-2016	09:30:39	0.026	0.024
30-Mar-2016	09:34:39	0.024	0.022
30-Mar-2016	09:38:39	0.017	0.020
30-Mar-2016	09:42:39	0.018	0.019
30-Mar-2016	09:46:39	0.023	0.020
30-Mar-2016	09:50:39	0.018	0.020
30-Mar-2016	09:54:39	0.018	0.018
30-Mar-2016	09:58:39	0.019	0.018
30-Mar-2016	10:02:39	0.017	0.019
30-Mar-2016	10:06:39	0.020	0.020
30-Mar-2016	10:10:39	0.022	0.023
30-Mar-2016	10:14:39	0.026	0.022
30-Mar-2016	10:18:39	0.019	0.022
30-Mar-2016	10:22:39	0.021	0.020
30-Mar-2016	10:26:39	0.021	0.021

DUST MONITORING

March 2016

shading indicates values over the threshold

Monitor: 3

Threshold: 0.15 (mg/m^3)

Date	Time	Value (mg/m^3)	TWA (mg/m^3)
30-Mar-2016	10:30:39	0.021	0.020
30-Mar-2016	10:34:39	0.018	0.019
30-Mar-2016	10:38:39	0.019	0.019
30-Mar-2016	10:42:39	0.019	0.019
30-Mar-2016	10:46:39	0.019	0.018
30-Mar-2016	10:50:39	0.017	0.018
30-Mar-2016	10:54:39	0.017	0.017
30-Mar-2016	10:58:39	0.018	0.018
30-Mar-2016	11:02:39	0.018	0.018
30-Mar-2016	11:06:39	0.017	0.018
30-Mar-2016	11:10:39	0.018	0.017
30-Mar-2016	11:14:39	0.017	0.018
30-Mar-2016	11:18:39	0.019	0.018
30-Mar-2016	11:22:39	0.018	0.018
30-Mar-2016	11:26:39	0.016	0.017
30-Mar-2016	11:30:39	0.016	0.018
30-Mar-2016	11:34:39	0.022	0.019
30-Mar-2016	11:38:39	0.018	0.019
30-Mar-2016	11:42:39	0.016	0.017
30-Mar-2016	11:46:39	0.017	0.016
30-Mar-2016	11:50:39	0.015	0.015
30-Mar-2016	11:54:39	0.014	0.015
30-Mar-2016	11:58:39	0.016	0.015
30-Mar-2016	12:02:39	0.016	0.015
30-Mar-2016	12:06:39	0.014	0.015
30-Mar-2016	12:10:39	0.015	0.015
30-Mar-2016	12:14:39	0.015	0.015
30-Mar-2016	12:18:39	0.016	0.016
30-Mar-2016	12:22:39	0.017	0.016
30-Mar-2016	12:26:39	0.016	0.016
30-Mar-2016	12:30:39	0.016	0.017
30-Mar-2016	12:34:39	0.019	0.016
30-Mar-2016	12:38:39	0.014	0.016
30-Mar-2016	12:42:39	0.016	0.015
30-Mar-2016	12:46:39	0.015	0.016
30-Mar-2016	12:50:39	0.016	0.015
30-Mar-2016	12:54:39	0.014	0.015
30-Mar-2016	12:58:39	0.015	0.015
30-Mar-2016	13:02:39	0.015	0.015
30-Mar-2016	13:06:39	0.015	0.015
30-Mar-2016	13:10:39	0.014	0.015

DUST MONITORING

March 2016

shading indicates values over the threshold

Monitor: 3

Threshold: 0.15 (mg/m^3)

Date	Time	Value (mg/m^3)	TWA (mg/m^3)
30-Mar-2016	13:14:39	0.015	0.015
30-Mar-2016	13:18:39	0.015	0.015
30-Mar-2016	13:22:39	0.014	0.015
30-Mar-2016	13:26:39	0.015	0.015
30-Mar-2016	13:30:39	0.016	0.016
30-Mar-2016	13:34:39	0.016	0.015
30-Mar-2016	13:38:39	0.014	0.015
30-Mar-2016	13:42:39	0.014	0.014
30-Mar-2016	13:46:39	0.015	0.014
30-Mar-2016	13:50:39	0.014	0.015
30-Mar-2016	13:54:39	0.015	0.015
30-Mar-2016	13:58:39	0.015	0.015
30-Mar-2016	14:02:39	0.014	0.015
30-Mar-2016	14:06:39	0.016	0.015
30-Mar-2016	14:10:39	0.016	0.016
30-Mar-2016	14:14:39	0.015	0.016
30-Mar-2016	14:18:39	0.016	0.015
30-Mar-2016	14:22:39	0.015	0.015
30-Mar-2016	14:26:39	0.014	0.017
30-Mar-2016	14:30:39	0.023	0.017
30-Mar-2016	14:34:39	0.014	0.017
30-Mar-2016	14:38:39	0.014	0.015
30-Mar-2016	14:42:39	0.017	0.016
30-Mar-2016	14:46:39	0.016	0.016
30-Mar-2016	14:50:39	0.015	0.015
30-Mar-2016	14:54:39	0.015	0.015
30-Mar-2016	14:58:39	0.015	0.015
30-Mar-2016	15:02:39	0.014	0.014
30-Mar-2016	15:06:39	0.014	0.014
30-Mar-2016	15:10:39	0.015	0.015
30-Mar-2016	15:14:39	0.015	0.015
30-Mar-2016	15:18:39	0.014	0.015
30-Mar-2016	15:22:39	0.017	0.017
30-Mar-2016	15:26:39	0.019	0.023
30-Mar-2016	15:30:39	0.034	0.023
30-Mar-2016	15:34:39	0.016	0.022
30-Mar-2016	15:38:39	0.015	0.016
30-Mar-2016	15:42:39	0.016	0.015
30-Mar-2016	15:46:39	0.015	0.015
30-Mar-2016	15:50:39	0.015	0.015
30-Mar-2016	15:54:39	0.015	0.015

DUST MONITORING

March 2016

shading indicates values over the threshold

Monitor: 3

Threshold: 0.15 (mg/m^3)

Date	Time	Value (mg/m^3)	TWA (mg/m^3)
30-Mar-2016	15:58:39	0.016	0.015
30-Mar-2016	16:02:39	0.015	0.015
30-Mar-2016	16:06:39	0.015	0.016
30-Mar-2016	16:10:39	0.017	0.016
30-Mar-2016	16:14:39	0.016	0.017
30-Mar-2016	16:18:39	0.017	0.016
30-Mar-2016	16:22:39	0.016	0.017
30-Mar-2016	16:26:39	0.017	0.017

DUST MONITORING

April 2016

shading indicates values over the threshold

Monitor: 1

Threshold: 0.15 (mg/m^3)

Date	Time	Value (mg/m^3)	TWA (mg/m^3)
4-Apr-2016	09:33:28	0.002	0.002
4-Apr-2016	09:37:28	0.002	0.002
4-Apr-2016	09:41:28	0.002	0.002
4-Apr-2016	09:45:28	0.002	0.002
4-Apr-2016	09:49:28	0.002	0.001
4-Apr-2016	09:53:28	0.000	0.001
4-Apr-2016	09:57:28	0.001	0.000
4-Apr-2016	10:01:28	0.000	0.001
4-Apr-2016	10:05:28	0.003	0.001
4-Apr-2016	10:09:28	0.001	0.002
4-Apr-2016	10:13:28	0.001	0.001
4-Apr-2016	10:17:28	0.002	0.001
4-Apr-2016	10:21:28	0.001	0.001
4-Apr-2016	10:25:28	0.000	0.001
4-Apr-2016	10:29:28	0.002	0.001
4-Apr-2016	10:33:28	0.000	0.001
4-Apr-2016	10:37:28	0.001	0.001
4-Apr-2016	10:41:28	0.003	0.002
4-Apr-2016	10:45:28	0.002	0.002
4-Apr-2016	10:49:28	0.000	0.001
4-Apr-2016	10:53:28	0.001	0.000
4-Apr-2016	10:57:28	0.000	0.000
4-Apr-2016	11:01:28	0.000	0.001
4-Apr-2016	11:05:28	0.002	0.002
4-Apr-2016	11:09:28	0.005	0.003
4-Apr-2016	11:13:28	0.003	0.003
4-Apr-2016	11:17:28	0.002	0.002
4-Apr-2016	11:21:28	0.002	0.002
4-Apr-2016	11:25:28	0.001	0.002
4-Apr-2016	11:29:28	0.002	0.002
4-Apr-2016	11:33:28	0.003	0.003
4-Apr-2016	11:37:28	0.004	0.003
4-Apr-2016	11:41:28	0.002	0.003
4-Apr-2016	11:45:28	0.002	0.002
4-Apr-2016	11:49:28	0.003	0.003
4-Apr-2016	11:53:28	0.003	0.003
4-Apr-2016	11:57:28	0.003	0.003
4-Apr-2016	12:01:28	0.003	0.003
4-Apr-2016	12:05:28	0.003	0.005
4-Apr-2016	12:09:28	0.008	0.005
4-Apr-2016	12:13:28	0.003	0.004

DUST MONITORING

April 2016

shading indicates values over the threshold

Monitor: 1

Threshold: 0.15 (mg/m^3)

Date	Time	Value (mg/m^3)	TWA (mg/m^3)
4-Apr-2016	12:17:28	0.002	0.006
4-Apr-2016	12:21:28	0.014	0.006
4-Apr-2016	12:25:28	0.002	0.006
4-Apr-2016	12:29:28	0.002	0.005
4-Apr-2016	12:33:28	0.011	0.005
4-Apr-2016	12:37:28	0.003	0.014
4-Apr-2016	12:41:28	0.029	0.012
4-Apr-2016	12:45:28	0.003	0.012
4-Apr-2016	12:49:28	0.004	0.003
4-Apr-2016	12:53:28	0.002	0.006
4-Apr-2016	12:57:28	0.013	0.006
4-Apr-2016	13:01:28	0.003	0.006
4-Apr-2016	13:05:28	0.002	0.002
4-Apr-2016	13:09:28	0.001	0.026
4-Apr-2016	13:13:28	0.076	0.027
4-Apr-2016	13:17:28	0.003	0.027
4-Apr-2016	13:21:28	0.003	0.003
4-Apr-2016	13:25:28	0.003	0.002
4-Apr-2016	13:29:28	0.001	0.002
4-Apr-2016	13:33:28	0.001	0.002
4-Apr-2016	13:37:28	0.004	0.004
4-Apr-2016	13:41:28	0.007	0.005
4-Apr-2016	13:45:28	0.003	0.005
4-Apr-2016	13:49:28	0.005	0.006
4-Apr-2016	13:53:28	0.010	0.006
4-Apr-2016	13:57:28	0.002	0.005
4-Apr-2016	14:01:28	0.003	0.003
4-Apr-2016	14:05:28	0.005	0.004
5-Apr-2016	09:54:34	0.000	0.001
5-Apr-2016	09:58:34	0.001	0.000
5-Apr-2016	10:02:34	0.000	0.000
5-Apr-2016	10:06:34	0.000	0.000
5-Apr-2016	10:10:34	0.000	0.000
5-Apr-2016	10:14:34	0.000	0.000
5-Apr-2016	10:18:34	0.000	0.000
5-Apr-2016	10:22:34	0.000	0.000
5-Apr-2016	10:26:34	0.001	0.000
5-Apr-2016	10:30:34	0.000	0.000
5-Apr-2016	10:34:34	0.000	0.000
5-Apr-2016	10:38:34	0.000	0.000
5-Apr-2016	10:42:34	0.000	0.013

DUST MONITORING

April 2016

shading indicates values over the threshold

Monitor: 1

Threshold: 0.15 (mg/m^3)

Date	Time	Value (mg/m^3)	TWA (mg/m^3)
5-Apr-2016	10:46:34	0.039	0.013
5-Apr-2016	10:50:34	0.001	0.013
5-Apr-2016	10:54:34	0.000	0.000
5-Apr-2016	10:58:34	0.000	0.000
5-Apr-2016	11:02:34	0.000	0.000
5-Apr-2016	11:06:34	0.000	0.000
5-Apr-2016	11:10:34	0.000	0.000
5-Apr-2016	11:14:34	0.001	0.000
5-Apr-2016	11:18:34	0.000	0.000
5-Apr-2016	11:22:34	0.000	0.000
5-Apr-2016	11:26:34	0.000	0.000
5-Apr-2016	11:30:34	0.000	0.000
5-Apr-2016	11:34:34	0.000	0.000
5-Apr-2016	11:38:34	0.000	0.000
5-Apr-2016	11:42:34	0.000	0.000
5-Apr-2016	11:46:34	0.000	0.001
5-Apr-2016	11:50:34	0.004	0.001
5-Apr-2016	11:54:34	0.000	0.001
5-Apr-2016	11:58:34	0.000	0.000
5-Apr-2016	12:02:34	0.000	0.000
5-Apr-2016	12:06:34	0.000	0.000
5-Apr-2016	12:10:34	0.000	0.000
5-Apr-2016	12:14:34	0.000	0.044
5-Apr-2016	12:18:34	0.132	0.051
5-Apr-2016	12:22:34	0.020	0.051
5-Apr-2016	12:26:34	0.000	0.008
5-Apr-2016	12:30:34	0.004	0.001
5-Apr-2016	12:34:34	0.000	0.008
5-Apr-2016	12:38:34	0.020	0.007
5-Apr-2016	12:42:34	0.000	0.007
5-Apr-2016	12:46:34	0.000	0.000
5-Apr-2016	12:50:34	0.000	0.004
5-Apr-2016	12:54:34	0.012	0.010
5-Apr-2016	12:58:34	0.019	0.011
5-Apr-2016	13:02:34	0.001	0.007
5-Apr-2016	13:06:34	0.000	0.001
5-Apr-2016	13:10:34	0.001	0.000
5-Apr-2016	13:14:34	0.000	0.000
5-Apr-2016	13:18:34	0.000	0.000
5-Apr-2016	13:22:34	0.000	0.000
5-Apr-2016	13:26:34	0.001	0.000

DUST MONITORING

April 2016

shading indicates values over the threshold

Monitor: 1

Threshold: 0.15 (mg/m^3)

Date	Time	Value (mg/m^3)	TWA (mg/m^3)
5-Apr-2016	13:30:34	0.000	0.000
5-Apr-2016	13:34:34	0.000	0.000
5-Apr-2016	13:38:34	0.000	0.000
5-Apr-2016	13:42:34	0.000	0.000
5-Apr-2016	13:46:34	0.001	0.001
5-Apr-2016	13:50:34	0.002	0.001
5-Apr-2016	13:54:34	0.000	0.001
5-Apr-2016	13:58:34	0.000	0.000
5-Apr-2016	14:02:34	0.000	0.000
5-Apr-2016	14:06:34	0.001	0.001
5-Apr-2016	14:10:34	0.001	0.001
5-Apr-2016	14:14:34	0.001	0.001
5-Apr-2016	14:18:34	0.000	0.004
5-Apr-2016	14:22:34	0.010	0.006
5-Apr-2016	14:26:34	0.008	0.006
5-Apr-2016	14:30:34	0.000	0.003
5-Apr-2016	14:34:34	0.000	0.000
5-Apr-2016	14:38:34	0.000	0.000
5-Apr-2016	14:42:34	0.001	0.000
5-Apr-2016	14:46:34	0.000	0.000
5-Apr-2016	14:50:34	0.000	0.000
5-Apr-2016	14:54:34	0.000	0.000
6-Apr-2016	08:28:36	0.001	0.001
6-Apr-2016	08:32:36	0.001	0.001
6-Apr-2016	08:36:36	0.001	0.001
6-Apr-2016	08:40:36	0.002	0.002
6-Apr-2016	08:44:36	0.002	0.001
6-Apr-2016	08:48:36	0.000	0.001
6-Apr-2016	08:52:36	0.001	0.001
6-Apr-2016	08:56:36	0.001	0.001
6-Apr-2016	09:00:36	0.000	0.000
6-Apr-2016	09:04:36	0.000	0.000
6-Apr-2016	09:08:36	0.000	0.000
6-Apr-2016	09:12:36	0.001	0.000
6-Apr-2016	09:16:36	0.000	0.000
6-Apr-2016	09:20:36	0.000	0.000
6-Apr-2016	09:24:36	0.000	0.000
6-Apr-2016	09:28:36	0.000	0.000
6-Apr-2016	09:32:36	0.000	0.000
6-Apr-2016	09:36:36	0.000	0.000
6-Apr-2016	09:40:36	0.000	0.000

DUST MONITORING

April 2016

shading indicates values over the threshold

Monitor: 1

Threshold: 0.15 (mg/m^3)

Date	Time	Value (mg/m^3)	TWA (mg/m^3)
6-Apr-2016	09:44:36	0.001	0.001
6-Apr-2016	09:48:36	0.001	0.001
6-Apr-2016	09:52:36	0.000	0.000
6-Apr-2016	09:56:36	0.000	0.000
6-Apr-2016	10:00:36	0.000	0.001
6-Apr-2016	10:04:36	0.004	0.001
6-Apr-2016	10:08:36	0.000	0.002
6-Apr-2016	10:12:36	0.002	0.001
6-Apr-2016	10:16:36	0.000	0.001
6-Apr-2016	10:20:36	0.002	0.002
6-Apr-2016	10:24:36	0.003	0.002
6-Apr-2016	10:28:36	0.000	0.001
6-Apr-2016	10:32:36	0.000	0.000
6-Apr-2016	10:36:36	0.000	0.000
6-Apr-2016	10:40:36	0.000	0.000
6-Apr-2016	10:44:36	0.000	0.000
6-Apr-2016	10:48:36	0.000	0.000
6-Apr-2016	10:52:36	0.000	0.000
6-Apr-2016	10:56:36	0.000	0.000
6-Apr-2016	11:00:36	0.001	0.001
6-Apr-2016	11:04:36	0.001	0.001
6-Apr-2016	11:08:36	0.000	0.001
6-Apr-2016	11:12:36	0.001	0.003
6-Apr-2016	11:16:36	0.008	0.003
6-Apr-2016	11:20:36	0.001	0.004
6-Apr-2016	11:24:36	0.002	0.001
6-Apr-2016	11:28:36	0.001	0.001
6-Apr-2016	11:32:36	0.001	0.001
6-Apr-2016	11:36:36	0.002	0.001
6-Apr-2016	11:40:36	0.000	0.001
6-Apr-2016	11:44:36	0.000	0.000
6-Apr-2016	11:48:36	0.000	0.000
6-Apr-2016	11:52:36	0.000	0.000
6-Apr-2016	11:56:36	0.000	0.000
6-Apr-2016	12:00:36	0.000	0.000
6-Apr-2016	12:04:36	0.001	0.000
6-Apr-2016	12:08:36	0.000	0.000
6-Apr-2016	12:12:36	0.000	0.000
6-Apr-2016	12:16:36	0.000	0.000
6-Apr-2016	12:20:36	0.001	0.001
6-Apr-2016	12:24:36	0.001	0.001

DUST MONITORING

April 2016

shading indicates values over the threshold

Monitor: 1

Threshold: 0.15 (mg/m^3)

Date	Time	Value (mg/m^3)	TWA (mg/m^3)
6-Apr-2016	12:28:36	0.000	0.001
6-Apr-2016	12:32:36	0.002	0.001
6-Apr-2016	12:36:36	0.000	0.002
6-Apr-2016	12:40:36	0.005	0.003
6-Apr-2016	12:44:36	0.003	0.004
6-Apr-2016	12:48:36	0.004	0.019
6-Apr-2016	12:52:36	0.050	0.023
6-Apr-2016	12:56:36	0.014	0.022
6-Apr-2016	13:00:36	0.002	0.009
6-Apr-2016	13:04:36	0.011	0.012
6-Apr-2016	13:08:36	0.022	0.012
6-Apr-2016	13:12:36	0.003	0.009
6-Apr-2016	13:16:36	0.002	0.002
6-Apr-2016	13:20:36	0.001	0.003
6-Apr-2016	13:24:36	0.005	0.003
6-Apr-2016	13:28:36	0.003	0.003
6-Apr-2016	13:32:36	0.001	0.003
6-Apr-2016	13:36:36	0.004	0.002
6-Apr-2016	13:40:36	0.002	0.002
6-Apr-2016	13:44:36	0.001	0.001
6-Apr-2016	13:48:36	0.001	0.002
6-Apr-2016	13:52:36	0.004	0.002
6-Apr-2016	13:56:36	0.002	0.002
6-Apr-2016	14:00:36	0.000	0.001
6-Apr-2016	14:04:36	0.002	0.001
6-Apr-2016	14:08:36	0.002	0.002
6-Apr-2016	14:12:36	0.001	0.001
6-Apr-2016	14:16:36	0.001	0.002
6-Apr-2016	14:20:36	0.003	0.004
6-Apr-2016	14:24:36	0.009	0.005
6-Apr-2016	14:28:36	0.003	0.004
6-Apr-2016	14:32:36	0.000	0.001
6-Apr-2016	14:36:36	0.001	0.014
6-Apr-2016	14:40:36	0.042	0.016
6-Apr-2016	14:44:36	0.005	0.017
6-Apr-2016	14:48:36	0.004	0.004
6-Apr-2016	14:52:36	0.004	0.003
6-Apr-2016	14:56:36	0.002	0.002
6-Apr-2016	15:00:36	0.000	0.001
6-Apr-2016	15:04:36	0.002	0.003
6-Apr-2016	15:08:36	0.008	0.006

DUST MONITORING

April 2016

shading indicates values over the threshold

Monitor: 1

Threshold: 0.15 (mg/m^3)

Date	Time	Value (mg/m^3)	TWA (mg/m^3)
6-Apr-2016	15:12:36	0.007	0.008
6-Apr-2016	15:16:36	0.009	0.011
6-Apr-2016	15:20:36	0.018	0.009
6-Apr-2016	15:24:36	0.000	0.006
6-Apr-2016	15:28:36	0.001	0.000
6-Apr-2016	15:32:36	0.000	0.001
6-Apr-2016	15:36:36	0.002	0.001
6-Apr-2016	15:40:36	0.000	0.002
6-Apr-2016	15:44:36	0.004	0.002
6-Apr-2016	15:48:36	0.002	0.002
6-Apr-2016	15:52:36	0.001	0.009
6-Apr-2016	15:56:36	0.023	0.012
8-Apr-2016	08:52:56	0.005	0.013
8-Apr-2016	08:56:56	0.021	0.014
8-Apr-2016	09:00:56	0.017	0.033
8-Apr-2016	09:04:56	0.060	0.038
8-Apr-2016	09:08:56	0.038	0.095
8-Apr-2016	09:12:56	0.188	0.181
8-Apr-2016	09:16:56	0.318	0.189
8-Apr-2016	09:20:56	0.060	0.129
8-Apr-2016	09:24:56	0.010	0.025
8-Apr-2016	09:28:56	0.004	0.040
8-Apr-2016	09:32:56	0.106	0.045
8-Apr-2016	09:36:56	0.024	0.066
8-Apr-2016	09:40:56	0.067	0.037
8-Apr-2016	09:44:56	0.019	0.031
8-Apr-2016	09:48:56	0.006	0.011
8-Apr-2016	09:52:56	0.007	0.005
8-Apr-2016	09:56:56	0.003	0.012
8-Apr-2016	10:00:56	0.027	0.013
8-Apr-2016	10:04:56	0.008	0.018
8-Apr-2016	10:08:56	0.019	0.044
8-Apr-2016	10:12:56	0.104	0.043
8-Apr-2016	10:16:56	0.005	0.058
8-Apr-2016	10:20:56	0.064	0.039
8-Apr-2016	10:24:56	0.047	0.049
8-Apr-2016	10:28:56	0.036	0.043
8-Apr-2016	10:32:56	0.047	0.061
8-Apr-2016	10:36:56	0.099	0.065
8-Apr-2016	10:40:56	0.049	0.058
8-Apr-2016	10:44:56	0.026	0.034

DUST MONITORING

April 2016

shading indicates values over the threshold

Monitor: 1

Threshold: 0.15 (mg/m^3)

Date	Time	Value (mg/m^3)	TWA (mg/m^3)
8-Apr-2016	10:48:56	0.027	0.023
8-Apr-2016	10:52:56	0.016	0.020
8-Apr-2016	10:56:56	0.016	0.018
8-Apr-2016	11:00:56	0.022	0.014
8-Apr-2016	11:04:56	0.005	0.017
8-Apr-2016	11:08:56	0.024	0.011
8-Apr-2016	11:12:56	0.005	0.011
8-Apr-2016	11:16:56	0.005	0.005
8-Apr-2016	11:20:56	0.006	0.009
8-Apr-2016	11:24:56	0.015	0.011
11-Apr-2016	09:50:34	0.053	0.046
11-Apr-2016	09:54:34	0.038	0.042
11-Apr-2016	09:58:34	0.036	0.037
11-Apr-2016	10:02:34	0.036	0.036
11-Apr-2016	10:06:34	0.037	0.036
11-Apr-2016	10:10:34	0.036	0.036
11-Apr-2016	10:14:34	0.035	0.036
11-Apr-2016	10:18:34	0.036	0.036
11-Apr-2016	10:22:34	0.036	0.036
11-Apr-2016	10:26:34	0.037	0.036
11-Apr-2016	10:30:34	0.036	0.036
11-Apr-2016	10:34:34	0.035	0.035
11-Apr-2016	10:38:34	0.033	0.034
11-Apr-2016	10:42:34	0.035	0.035
11-Apr-2016	10:46:34	0.038	0.042
11-Apr-2016	10:50:34	0.052	0.044
11-Apr-2016	10:54:34	0.043	0.053
11-Apr-2016	10:58:34	0.063	0.050
11-Apr-2016	11:02:34	0.044	0.057
11-Apr-2016	11:06:34	0.065	0.053
11-Apr-2016	11:10:34	0.049	0.052
11-Apr-2016	11:14:34	0.042	0.044
11-Apr-2016	11:18:34	0.040	0.041
11-Apr-2016	11:22:34	0.042	0.041
11-Apr-2016	11:26:34	0.041	0.041
11-Apr-2016	11:30:34	0.039	0.040
11-Apr-2016	11:34:34	0.039	0.039
11-Apr-2016	11:38:34	0.038	0.039
11-Apr-2016	11:42:34	0.040	0.039
11-Apr-2016	11:46:34	0.040	0.039
11-Apr-2016	11:50:34	0.037	0.038

DUST MONITORING

April 2016

shading indicates values over the threshold

Monitor: 1

Threshold: 0.15 (mg/m^3)

Date	Time	Value (mg/m^3)	TWA (mg/m^3)
11-Apr-2016	11:54:34	0.037	0.037
11-Apr-2016	11:58:34	0.037	0.037
11-Apr-2016	12:02:34	0.037	0.037
11-Apr-2016	12:06:34	0.037	0.037
11-Apr-2016	12:10:34	0.037	0.037
11-Apr-2016	12:14:34	0.037	0.039
11-Apr-2016	12:18:34	0.043	0.039
11-Apr-2016	12:22:34	0.038	0.040
11-Apr-2016	12:26:34	0.038	0.038
11-Apr-2016	12:30:34	0.039	0.039
11-Apr-2016	12:34:34	0.039	0.040
11-Apr-2016	12:38:34	0.041	0.040
11-Apr-2016	12:42:34	0.041	0.042
11-Apr-2016	12:46:34	0.044	0.042
11-Apr-2016	12:50:34	0.040	0.041
11-Apr-2016	12:54:34	0.039	0.040
11-Apr-2016	12:58:34	0.040	0.042
11-Apr-2016	13:02:34	0.048	0.043
11-Apr-2016	13:06:34	0.042	0.045
11-Apr-2016	13:10:34	0.044	0.048
11-Apr-2016	13:14:34	0.057	0.055
11-Apr-2016	13:18:34	0.065	0.104
11-Apr-2016	13:22:34	0.189	0.102
11-Apr-2016	13:26:34	0.051	0.099
11-Apr-2016	13:30:34	0.057	0.084
11-Apr-2016	13:34:34	0.143	0.096
11-Apr-2016	13:38:34	0.089	0.096
11-Apr-2016	13:42:34	0.057	0.063
11-Apr-2016	13:46:34	0.042	0.050
13-Apr-2016	08:19:44	0.046	0.045
13-Apr-2016	08:23:44	0.043	0.043
13-Apr-2016	08:27:44	0.040	0.041
13-Apr-2016	08:31:44	0.039	0.039
13-Apr-2016	08:35:44	0.038	0.039
13-Apr-2016	08:39:44	0.039	0.039
13-Apr-2016	08:43:44	0.041	0.038
13-Apr-2016	08:47:44	0.035	0.037
13-Apr-2016	08:51:44	0.034	0.035
13-Apr-2016	08:55:44	0.035	0.034
13-Apr-2016	08:59:44	0.034	0.034
13-Apr-2016	09:03:44	0.034	0.034

DUST MONITORING

April 2016

shading indicates values over the threshold

Monitor: 1

Threshold: 0.15 (mg/m^3)

Date	Time	Value (mg/m^3)	TWA (mg/m^3)
13-Apr-2016	09:07:44	0.035	0.035
13-Apr-2016	09:11:44	0.035	0.035
13-Apr-2016	09:15:44	0.035	0.035
13-Apr-2016	09:19:44	0.034	0.035
13-Apr-2016	09:23:44	0.035	0.035
13-Apr-2016	09:27:44	0.036	0.035
13-Apr-2016	09:31:44	0.035	0.036
13-Apr-2016	09:35:44	0.037	0.036
13-Apr-2016	09:39:44	0.037	0.037
13-Apr-2016	09:43:44	0.036	0.037
13-Apr-2016	09:47:44	0.037	0.036
13-Apr-2016	09:51:44	0.036	0.036
13-Apr-2016	09:55:44	0.036	0.036
13-Apr-2016	09:59:44	0.036	0.036
13-Apr-2016	10:03:44	0.036	0.037
13-Apr-2016	10:07:44	0.039	0.037
13-Apr-2016	10:11:44	0.036	0.037
13-Apr-2016	10:15:44	0.036	0.036
13-Apr-2016	10:19:44	0.036	0.036
13-Apr-2016	10:23:44	0.036	0.036
13-Apr-2016	10:27:44	0.037	0.037
13-Apr-2016	10:31:44	0.038	0.038
13-Apr-2016	10:35:44	0.039	0.039
13-Apr-2016	10:39:44	0.040	0.040
13-Apr-2016	10:43:44	0.040	0.040
13-Apr-2016	10:47:44	0.041	0.040
13-Apr-2016	10:51:44	0.040	0.041
13-Apr-2016	10:55:44	0.041	0.040
13-Apr-2016	10:59:44	0.038	0.039
13-Apr-2016	11:03:44	0.038	0.038
13-Apr-2016	11:07:44	0.039	0.038
13-Apr-2016	11:11:44	0.037	0.038
13-Apr-2016	11:15:44	0.037	0.037
13-Apr-2016	11:19:44	0.037	0.037
13-Apr-2016	11:23:44	0.036	0.036
13-Apr-2016	11:27:44	0.036	0.037
13-Apr-2016	11:31:44	0.039	0.038
13-Apr-2016	11:35:44	0.038	0.039
13-Apr-2016	11:39:44	0.039	0.039
13-Apr-2016	11:43:44	0.040	0.040
13-Apr-2016	11:47:44	0.041	0.040

DUST MONITORING

April 2016

shading indicates values over the threshold

Monitor: 1

Threshold: 0.15 (mg/m^3)

Date	Time	Value (mg/m^3)	TWA (mg/m^3)
13-Apr-2016	11:51:44	0.039	0.039
13-Apr-2016	11:55:44	0.038	0.038
13-Apr-2016	11:59:44	0.038	0.037
13-Apr-2016	12:03:44	0.036	0.037
13-Apr-2016	12:07:44	0.037	0.036
13-Apr-2016	12:11:44	0.036	0.036
13-Apr-2016	12:15:44	0.036	0.036
13-Apr-2016	12:19:44	0.035	0.035
13-Apr-2016	12:23:44	0.035	0.036
13-Apr-2016	12:27:44	0.037	0.037
13-Apr-2016	12:31:44	0.038	0.037
13-Apr-2016	12:35:44	0.037	0.037
13-Apr-2016	12:39:44	0.036	0.036
13-Apr-2016	12:43:44	0.036	0.036
13-Apr-2016	12:47:44	0.036	0.036
13-Apr-2016	12:51:44	0.035	0.036
13-Apr-2016	12:55:44	0.036	0.036
13-Apr-2016	12:59:44	0.038	0.037
13-Apr-2016	13:03:44	0.036	0.037
13-Apr-2016	13:07:44	0.036	0.036
13-Apr-2016	13:11:44	0.035	0.035
13-Apr-2016	13:15:44	0.035	0.035
13-Apr-2016	13:19:44	0.036	0.036
13-Apr-2016	13:23:44	0.036	0.037
13-Apr-2016	13:27:44	0.038	0.037
13-Apr-2016	13:31:44	0.038	0.038
13-Apr-2016	13:35:44	0.039	0.038
13-Apr-2016	13:39:44	0.038	0.038
13-Apr-2016	13:43:44	0.038	0.038
19-Apr-2016	10:03:38	0.049	0.046
19-Apr-2016	10:07:38	0.043	0.044
19-Apr-2016	10:11:38	0.039	0.040
19-Apr-2016	10:15:38	0.038	0.038
19-Apr-2016	10:19:38	0.038	0.038
19-Apr-2016	10:23:38	0.038	0.038
19-Apr-2016	10:27:38	0.037	0.037
19-Apr-2016	10:31:38	0.037	0.037
19-Apr-2016	10:35:38	0.037	0.038
19-Apr-2016	10:39:38	0.039	0.038
19-Apr-2016	10:43:38	0.039	0.042
19-Apr-2016	10:47:38	0.048	0.051

DUST MONITORING

April 2016

shading indicates values over the threshold

Monitor: 1

Threshold: 0.15 (mg/m^3)

Date	Time	Value (mg/m^3)	TWA (mg/m^3)
19-Apr-2016	10:51:38	0.065	0.053
19-Apr-2016	10:55:38	0.046	0.051
19-Apr-2016	10:59:38	0.041	0.045
19-Apr-2016	11:03:38	0.047	0.045
19-Apr-2016	11:07:38	0.047	0.048
19-Apr-2016	11:11:38	0.049	0.048
19-Apr-2016	11:15:38	0.049	0.050
19-Apr-2016	11:19:38	0.051	0.050
20-Apr-2016	09:20:23	0.037	0.037
20-Apr-2016	09:24:23	0.037	0.037
20-Apr-2016	09:28:23	0.037	0.040
20-Apr-2016	09:32:23	0.046	0.043
20-Apr-2016	09:36:23	0.045	0.049
20-Apr-2016	09:40:23	0.055	0.052
20-Apr-2016	09:44:23	0.055	0.054
20-Apr-2016	09:48:23	0.053	0.055
20-Apr-2016	09:52:23	0.056	0.058
20-Apr-2016	09:56:23	0.064	0.080
20-Apr-2016	10:00:23	0.119	0.082
20-Apr-2016	10:04:23	0.063	0.078
20-Apr-2016	10:08:23	0.052	0.057
20-Apr-2016	10:12:23	0.057	0.068
20-Apr-2016	10:16:23	0.096	0.077
20-Apr-2016	10:20:23	0.077	0.083
20-Apr-2016	10:24:23	0.077	0.073
20-Apr-2016	10:28:23	0.065	0.066
20-Apr-2016	10:32:23	0.056	0.058
20-Apr-2016	10:36:23	0.053	0.054
20-Apr-2016	10:40:23	0.053	0.052
20-Apr-2016	10:44:23	0.051	0.051
20-Apr-2016	10:48:23	0.050	0.050
20-Apr-2016	10:52:23	0.049	0.050
20-Apr-2016	10:56:23	0.051	0.051
20-Apr-2016	11:00:23	0.054	0.052
20-Apr-2016	11:04:23	0.052	0.053
20-Apr-2016	11:08:23	0.053	0.052
20-Apr-2016	11:12:23	0.051	0.053
20-Apr-2016	11:16:23	0.054	0.053
20-Apr-2016	11:20:23	0.053	0.053
20-Apr-2016	11:24:23	0.051	0.051
20-Apr-2016	11:28:23	0.050	0.050

DUST MONITORING

April 2016

shading indicates values over the threshold

Monitor: 1

Threshold: 0.15 (mg/m^3)

Date	Time	Value (mg/m^3)	TWA (mg/m^3)
20-Apr-2016	11:32:23	0.049	0.050
20-Apr-2016	11:36:23	0.050	0.048
20-Apr-2016	11:40:23	0.046	0.048
20-Apr-2016	11:44:23	0.049	0.049
20-Apr-2016	11:48:23	0.051	0.052
20-Apr-2016	11:52:23	0.055	0.053
20-Apr-2016	11:56:23	0.053	0.056
20-Apr-2016	12:00:23	0.061	0.056
20-Apr-2016	12:04:23	0.055	0.067
20-Apr-2016	12:08:23	0.084	0.080
20-Apr-2016	12:12:23	0.101	0.080
20-Apr-2016	12:16:23	0.055	0.068
20-Apr-2016	12:20:23	0.049	0.052
20-Apr-2016	12:24:23	0.052	0.050
20-Apr-2016	12:28:23	0.050	0.051
20-Apr-2016	12:32:23	0.052	0.054
20-Apr-2016	12:36:23	0.059	0.055
20-Apr-2016	12:40:23	0.053	0.053
20-Apr-2016	12:44:23	0.048	0.049
20-Apr-2016	12:48:23	0.045	0.048
20-Apr-2016	12:52:23	0.050	0.047
20-Apr-2016	12:56:23	0.047	0.050
20-Apr-2016	13:00:23	0.052	0.050
20-Apr-2016	13:04:23	0.050	0.050
20-Apr-2016	13:08:23	0.047	0.048
20-Apr-2016	13:12:23	0.047	0.059
20-Apr-2016	13:16:23	0.083	0.060
20-Apr-2016	13:20:23	0.051	0.062
20-Apr-2016	13:24:23	0.051	0.051
20-Apr-2016	13:28:23	0.050	0.051
20-Apr-2016	13:32:23	0.051	0.050
20-Apr-2016	13:36:23	0.049	0.053
20-Apr-2016	13:40:23	0.059	0.053
20-Apr-2016	13:44:23	0.052	0.054
20-Apr-2016	13:48:23	0.051	0.055
20-Apr-2016	13:52:23	0.062	0.055
20-Apr-2016	13:56:23	0.052	0.056
20-Apr-2016	14:00:23	0.053	0.053
20-Apr-2016	14:04:23	0.054	0.053
20-Apr-2016	14:08:23	0.051	0.053
20-Apr-2016	14:12:23	0.054	0.052

DUST MONITORING

April 2016

shading indicates values over the threshold

Monitor: 1

Threshold: 0.15 (mg/m^3)

Date	Time	Value (mg/m^3)	TWA (mg/m^3)
20-Apr-2016	14:16:23	0.052	0.053
20-Apr-2016	14:20:23	0.054	0.054
20-Apr-2016	14:24:23	0.056	0.056
20-Apr-2016	14:28:23	0.057	0.055
20-Apr-2016	14:32:23	0.053	0.053
20-Apr-2016	14:36:23	0.048	0.052
20-Apr-2016	14:40:23	0.054	0.053
20-Apr-2016	14:44:23	0.058	0.057
20-Apr-2016	14:48:23	0.059	0.058
20-Apr-2016	14:52:23	0.058	0.058
20-Apr-2016	14:56:23	0.057	0.056
20-Apr-2016	15:00:23	0.054	0.056
20-Apr-2016	15:04:23	0.058	0.060
20-Apr-2016	15:08:23	0.067	0.064
20-Apr-2016	15:12:23	0.066	0.064
20-Apr-2016	15:16:23	0.059	0.062
20-Apr-2016	15:20:23	0.061	0.060
20-Apr-2016	15:24:23	0.059	0.060
20-Apr-2016	15:28:23	0.061	0.063
20-Apr-2016	15:32:23	0.069	0.064
20-Apr-2016	15:36:23	0.063	0.064
20-Apr-2016	15:40:23	0.060	0.059
20-Apr-2016	15:44:23	0.053	0.057
20-Apr-2016	15:48:23	0.057	0.056
20-Apr-2016	15:52:23	0.059	0.060
20-Apr-2016	15:56:23	0.064	0.059
20-Apr-2016	16:00:23	0.055	0.060
27-Apr-2016	07:16:34	0.041	0.040
27-Apr-2016	07:20:34	0.038	0.036
27-Apr-2016	07:24:34	0.030	0.032
27-Apr-2016	07:28:34	0.031	0.029
27-Apr-2016	07:32:34	0.031	0.029
27-Apr-2016	07:36:34	0.032	0.029
27-Apr-2016	07:40:34	0.029	0.028
27-Apr-2016	07:44:34	0.028	0.030
27-Apr-2016	07:48:34	0.031	0.030
27-Apr-2016	07:52:34	0.028	0.031
27-Apr-2016	07:56:34	0.028	0.029
27-Apr-2016	08:00:34	0.028	0.029
27-Apr-2016	08:04:34	0.033	0.028
27-Apr-2016	08:08:34	0.028	0.030

DUST MONITORING

April 2016

shading indicates values over the threshold

Monitor: 1

Threshold: 0.15 (mg/m^3)

Date	Time	Value (mg/m^3)	TWA (mg/m^3)
27-Apr-2016	08:12:34	0.031	0.031
27-Apr-2016	08:16:34	0.027	0.031
27-Apr-2016	08:20:34	0.028	0.030
27-Apr-2016	08:24:34	0.028	0.032
27-Apr-2016	08:28:34	0.034	0.032
27-Apr-2016	08:32:34	0.030	0.031
27-Apr-2016	08:36:34	0.030	0.029
27-Apr-2016	08:40:34	0.031	0.029
27-Apr-2016	08:44:34	0.036	0.029
27-Apr-2016	08:48:34	0.029	0.029
27-Apr-2016	08:52:34	0.029	0.030
27-Apr-2016	08:56:34	0.029	0.030
27-Apr-2016	09:00:34	0.029	0.030
27-Apr-2016	09:04:34	0.029	0.029
27-Apr-2016	09:08:34	0.029	0.030
27-Apr-2016	09:12:34	0.032	0.030
27-Apr-2016	09:16:34	0.028	0.030
27-Apr-2016	09:20:34	0.029	0.030
27-Apr-2016	09:24:34	0.030	0.031
27-Apr-2016	09:28:34	0.031	0.031
27-Apr-2016	09:32:34	0.030	0.038
27-Apr-2016	09:36:34	0.030	0.038
27-Apr-2016	09:40:34	0.031	0.037
27-Apr-2016	09:44:34	0.032	0.031
27-Apr-2016	09:48:34	0.031	0.031
27-Apr-2016	09:52:34	0.052	0.032
27-Apr-2016	09:56:34	0.030	0.031
27-Apr-2016	10:00:34	0.030	0.031
27-Apr-2016	10:04:34	0.032	0.032
27-Apr-2016	10:08:34	0.032	0.038
27-Apr-2016	10:12:34	0.031	0.042
27-Apr-2016	10:16:34	0.030	0.043
27-Apr-2016	10:20:34	0.032	0.037
27-Apr-2016	10:24:34	0.033	0.034
27-Apr-2016	10:28:34	0.050	0.034
27-Apr-2016	10:32:34	0.043	0.034
27-Apr-2016	10:36:34	0.035	0.034
27-Apr-2016	10:40:34	0.033	0.034
27-Apr-2016	10:44:34	0.035	0.035
27-Apr-2016	10:48:34	0.035	0.035
27-Apr-2016	10:52:34	0.032	0.035

DUST MONITORING

April 2016

shading indicates values over the threshold

Monitor: 1

Threshold: 0.15 (mg/m^3)

Date	Time	Value (mg/m^3)	TWA (mg/m^3)
27-Apr-2016	10:56:34	0.036	0.035
27-Apr-2016	11:00:34	0.033	0.035
27-Apr-2016	11:04:34	0.035	0.034
27-Apr-2016	11:08:34	0.036	0.033
27-Apr-2016	11:12:34	0.035	0.033
27-Apr-2016	11:16:34	0.034	0.035
27-Apr-2016	11:20:34	0.035	0.036
27-Apr-2016	11:24:34	0.033	0.036
27-Apr-2016	11:28:34	0.032	0.034
27-Apr-2016	11:32:34	0.033	0.032
27-Apr-2016	11:36:34	0.039	0.033
27-Apr-2016	11:40:34	0.036	0.035
27-Apr-2016	11:44:34	0.032	0.037
27-Apr-2016	11:48:34	0.033	0.038
27-Apr-2016	11:52:34	0.032	0.036
27-Apr-2016	11:56:34	0.035	0.035
27-Apr-2016	12:00:34	0.039	0.035
27-Apr-2016	12:04:34	0.038	0.036
27-Apr-2016	12:08:34	0.037	0.035
27-Apr-2016	12:12:34	0.034	0.034
27-Apr-2016	12:16:34	0.035	0.034
27-Apr-2016	12:20:34	0.036	0.035
27-Apr-2016	12:24:34	0.036	0.035
27-Apr-2016	12:28:34	0.033	0.037
27-Apr-2016	12:32:34	0.034	0.040
27-Apr-2016	12:36:34	0.036	0.040
27-Apr-2016	12:40:34	0.034	0.039
27-Apr-2016	12:44:34	0.036	0.037
27-Apr-2016	12:48:34	0.042	0.038
27-Apr-2016	12:52:34	0.041	0.038
27-Apr-2016	12:56:34	0.037	0.039
27-Apr-2016	13:00:34	0.038	0.038
27-Apr-2016	13:04:34	0.036	0.039
27-Apr-2016	13:08:34	0.039	0.043
27-Apr-2016	13:12:34	0.040	0.046
27-Apr-2016	13:16:34	0.038	0.047
27-Apr-2016	13:20:34	0.036	0.044
27-Apr-2016	13:24:34	0.044	0.041
27-Apr-2016	13:28:34	0.048	0.040
27-Apr-2016	13:32:34	0.047	0.039
27-Apr-2016	13:36:34	0.045	0.043

DUST MONITORING

April 2016

shading indicates values over the threshold

Monitor: 1

Threshold: 0.15 (mg/m^3)

Date	Time	Value (mg/m^3)	TWA (mg/m^3)
27-Apr-2016	13:40:34	0.040	0.043
27-Apr-2016	13:44:34	0.039	0.043
27-Apr-2016	13:48:34	0.040	0.039
27-Apr-2016	13:52:34	0.037	0.039
27-Apr-2016	13:56:34	0.052	0.043
27-Apr-2016	14:00:34	0.039	0.045
27-Apr-2016	14:04:34	0.039	0.046
27-Apr-2016	14:08:34	0.040	0.042
27-Apr-2016	14:12:34	0.039	0.039
27-Apr-2016	14:16:34	0.049	0.039
27-Apr-2016	14:20:34	0.048	0.039
27-Apr-2016	14:24:34	0.040	0.038
27-Apr-2016	14:28:34	0.038	0.038
27-Apr-2016	14:32:34	0.039	0.038
27-Apr-2016	14:36:34	0.039	0.039
27-Apr-2016	14:40:34	0.039	0.039
27-Apr-2016	14:44:34	0.037	0.046
27-Apr-2016	14:48:34	0.038	0.046
27-Apr-2016	14:52:34	0.039	0.047
27-Apr-2016	14:56:34	0.039	0.041
27-Apr-2016	15:00:34	0.040	0.045
27-Apr-2016	15:04:34	0.058	0.045
27-Apr-2016	15:08:34	0.041	0.046
27-Apr-2016	15:12:34	0.041	0.043
27-Apr-2016	15:16:34	0.042	0.043
27-Apr-2016	15:20:34	0.052	0.056
27-Apr-2016	15:24:34	0.042	0.064
27-Apr-2016	15:28:34	0.045	0.075
27-Apr-2016	15:32:34	0.043	0.049
27-Apr-2016	15:36:34	0.042	0.048
27-Apr-2016	15:40:34	0.083	0.047
27-Apr-2016	15:44:34	0.066	0.047
29-Apr-2016	07:18:55	0.050	0.047
29-Apr-2016	07:22:55	0.047	0.047
29-Apr-2016	07:26:55	0.047	0.047
29-Apr-2016	07:30:55	0.047	0.048
29-Apr-2016	07:34:55	0.047	0.048
29-Apr-2016	07:38:55	0.046	0.048
29-Apr-2016	07:42:55	0.047	0.047
29-Apr-2016	07:46:55	0.049	0.047
29-Apr-2016	07:50:55	0.048	0.047

DUST MONITORING

April 2016

shading indicates values over the threshold

Monitor: 1

Threshold: 0.15 (mg/m^3)

Date	Time	Value (mg/m^3)	TWA (mg/m^3)
29-Apr-2016	07:54:55	0.047	0.047
29-Apr-2016	07:58:55	0.048	0.049
29-Apr-2016	08:02:55	0.047	0.049
29-Apr-2016	08:06:55	0.046	0.048
29-Apr-2016	08:10:55	0.047	0.045
29-Apr-2016	08:14:55	0.049	0.041
29-Apr-2016	08:18:55	0.050	0.042
29-Apr-2016	08:22:55	0.048	0.042
29-Apr-2016	08:26:55	0.047	0.043
29-Apr-2016	08:30:55	0.039	0.039
29-Apr-2016	08:34:55	0.038	0.038
29-Apr-2016	08:38:55	0.049	0.036
29-Apr-2016	08:42:55	0.040	0.036
29-Apr-2016	08:46:55	0.040	0.036
29-Apr-2016	08:50:55	0.037	0.039
29-Apr-2016	08:54:55	0.036	0.038
29-Apr-2016	08:58:55	0.036	0.038
29-Apr-2016	09:02:55	0.037	0.036
29-Apr-2016	09:06:55	0.036	0.037
29-Apr-2016	09:10:55	0.043	0.037
29-Apr-2016	09:14:55	0.035	0.037
29-Apr-2016	09:18:55	0.037	0.037
29-Apr-2016	09:22:55	0.037	0.038
29-Apr-2016	09:26:55	0.037	0.039
29-Apr-2016	09:30:55	0.036	0.040
29-Apr-2016	09:34:55	0.037	0.040
29-Apr-2016	09:38:55	0.039	0.040
29-Apr-2016	09:42:55	0.038	0.039
29-Apr-2016	09:46:55	0.040	0.038
29-Apr-2016	09:50:55	0.041	0.038
29-Apr-2016	09:54:55	0.040	0.037
29-Apr-2016	09:58:55	0.039	0.036
29-Apr-2016	10:02:55	0.037	0.035
29-Apr-2016	10:06:55	0.037	0.036
29-Apr-2016	10:10:55	0.039	0.037
29-Apr-2016	10:14:55	0.035	0.039
29-Apr-2016	10:18:55	0.035	0.041
29-Apr-2016	10:22:55	0.035	0.042
29-Apr-2016	10:26:55	0.037	0.040
29-Apr-2016	10:30:55	0.039	0.039
29-Apr-2016	10:34:55	0.042	0.044

DUST MONITORING

April 2016

shading indicates values over the threshold

Monitor: 1

Threshold: 0.15 (mg/m^3)

Date	Time	Value (mg/m^3)	TWA (mg/m^3)
29-Apr-2016	10:38:55	0.043	0.057
29-Apr-2016	10:42:55	0.041	0.058
29-Apr-2016	10:46:55	0.037	0.054
29-Apr-2016	10:50:55	0.040	0.041
29-Apr-2016	10:54:55	0.055	0.039
29-Apr-2016	10:58:55	0.077	0.037
29-Apr-2016	11:02:55	0.042	0.037
29-Apr-2016	11:06:55	0.043	0.037
29-Apr-2016	11:10:55	0.037	0.038
29-Apr-2016	11:14:55	0.037	0.038
29-Apr-2016	11:18:55	0.037	0.038
29-Apr-2016	11:22:55	0.038	0.038
29-Apr-2016	11:26:55	0.037	0.039
29-Apr-2016	11:30:55	0.038	0.047
29-Apr-2016	11:34:55	0.038	0.047
29-Apr-2016	11:38:55	0.038	0.046
29-Apr-2016	11:42:55	0.038	0.038
29-Apr-2016	11:46:55	0.040	0.038
29-Apr-2016	11:50:55	0.062	0.038
29-Apr-2016	11:54:55	0.038	0.038
29-Apr-2016	11:58:55	0.038	0.038
29-Apr-2016	12:02:55	0.038	0.037
29-Apr-2016	12:06:55	0.038	0.037
29-Apr-2016	12:10:55	0.038	0.036
29-Apr-2016	12:14:55	0.038	0.036
29-Apr-2016	12:18:55	0.038	0.036
29-Apr-2016	12:22:55	0.036	0.037
29-Apr-2016	12:26:55	0.036	0.048
29-Apr-2016	12:30:55	0.035	0.052
29-Apr-2016	12:34:55	0.036	0.052
29-Apr-2016	12:38:55	0.038	0.043
29-Apr-2016	12:42:55	0.037	0.039
29-Apr-2016	12:46:55	0.070	0.047
29-Apr-2016	12:50:55	0.048	0.047
29-Apr-2016	12:54:55	0.039	0.048
29-Apr-2016	12:58:55	0.042	0.042
29-Apr-2016	13:02:55	0.037	0.042
29-Apr-2016	13:06:55	0.062	0.043
29-Apr-2016	13:10:55	0.042	0.055
29-Apr-2016	13:14:55	0.040	0.054
29-Apr-2016	13:18:55	0.044	0.061

DUST MONITORING

April 2016

shading indicates values over the threshold

Monitor: 1

Threshold: 0.15 (mg/m^3)

Date	Time	Value (mg/m^3)	TWA (mg/m^3)
29-Apr-2016	13:22:55	0.042	0.047
29-Apr-2016	13:26:55	0.042	0.049
29-Apr-2016	13:30:55	0.081	0.072
29-Apr-2016	13:34:55	0.039	0.072
29-Apr-2016	13:38:55	0.062	0.072
29-Apr-2016	13:42:55	0.041	0.066
29-Apr-2016	13:46:55	0.043	0.078
29-Apr-2016	13:50:55	0.131	0.000
29-Apr-2016	13:54:55	0.043	0.000
29-Apr-2016	13:58:55	0.043	0.000
29-Apr-2016	14:02:55	0.112	0.000

DUST MONITORING

April 2016

shading indicates values over the threshold

Monitor: 2

Threshold: 0.15 (mg/m^3)

Date	Time	Value (mg/m^3)	TWA (mg/m^3)
5-Apr-2016	09:54:34	0.000	0.001
5-Apr-2016	09:58:34	0.001	0.000
5-Apr-2016	10:02:34	0.000	0.000
5-Apr-2016	10:06:34	0.000	0.000
5-Apr-2016	10:10:34	0.000	0.000
5-Apr-2016	10:14:34	0.000	0.000
5-Apr-2016	10:18:34	0.000	0.000
5-Apr-2016	10:22:34	0.000	0.000
5-Apr-2016	10:26:34	0.001	0.000
5-Apr-2016	10:30:34	0.000	0.000
5-Apr-2016	10:34:34	0.000	0.000
5-Apr-2016	10:38:34	0.000	0.000
5-Apr-2016	10:42:34	0.000	0.013
5-Apr-2016	10:46:34	0.039	0.013
5-Apr-2016	10:50:34	0.001	0.013
5-Apr-2016	10:54:34	0.000	0.000
5-Apr-2016	10:58:34	0.000	0.000
5-Apr-2016	11:02:34	0.000	0.000
5-Apr-2016	11:06:34	0.000	0.000
5-Apr-2016	11:10:34	0.000	0.000
5-Apr-2016	11:14:34	0.001	0.000
5-Apr-2016	11:18:34	0.000	0.000
5-Apr-2016	11:22:34	0.000	0.000
5-Apr-2016	11:26:34	0.000	0.000
5-Apr-2016	11:30:34	0.000	0.000
5-Apr-2016	11:34:34	0.000	0.000
5-Apr-2016	11:38:34	0.000	0.000
5-Apr-2016	11:42:34	0.000	0.000
5-Apr-2016	11:46:34	0.000	0.001
5-Apr-2016	11:50:34	0.004	0.001
5-Apr-2016	11:54:34	0.000	0.001
5-Apr-2016	11:58:34	0.000	0.000
5-Apr-2016	12:02:34	0.000	0.000
5-Apr-2016	12:06:34	0.000	0.000
5-Apr-2016	12:10:34	0.000	0.000
5-Apr-2016	12:14:34	0.000	0.044
5-Apr-2016	12:18:34	0.132	0.051
5-Apr-2016	12:22:34	0.020	0.051
5-Apr-2016	12:26:34	0.000	0.008
5-Apr-2016	12:30:34	0.004	0.001
5-Apr-2016	12:34:34	0.000	0.008

DUST MONITORING

April 2016

shading indicates values over the threshold

Monitor: 2

Threshold: 0.15 (mg/m^3)

Date	Time	Value (mg/m^3)	TWA (mg/m^3)
5-Apr-2016	12:38:34	0.020	0.007
5-Apr-2016	12:42:34	0.000	0.007
5-Apr-2016	12:46:34	0.000	0.000
5-Apr-2016	12:50:34	0.000	0.004
5-Apr-2016	12:54:34	0.012	0.010
5-Apr-2016	12:58:34	0.019	0.011
5-Apr-2016	13:02:34	0.001	0.007
5-Apr-2016	13:06:34	0.000	0.001
5-Apr-2016	13:10:34	0.001	0.000
5-Apr-2016	13:14:34	0.000	0.000
5-Apr-2016	13:18:34	0.000	0.000
5-Apr-2016	13:22:34	0.000	0.000
5-Apr-2016	13:26:34	0.001	0.000
5-Apr-2016	13:30:34	0.000	0.000
5-Apr-2016	13:34:34	0.000	0.000
5-Apr-2016	13:38:34	0.000	0.000
5-Apr-2016	13:42:34	0.000	0.000
5-Apr-2016	13:46:34	0.001	0.001
5-Apr-2016	13:50:34	0.002	0.001
5-Apr-2016	13:54:34	0.000	0.001
5-Apr-2016	13:58:34	0.000	0.000
5-Apr-2016	14:02:34	0.000	0.000
5-Apr-2016	14:06:34	0.001	0.001
5-Apr-2016	14:10:34	0.001	0.001
5-Apr-2016	14:14:34	0.001	0.001
5-Apr-2016	14:18:34	0.000	0.004
5-Apr-2016	14:22:34	0.010	0.006
5-Apr-2016	14:26:34	0.008	0.006
5-Apr-2016	14:30:34	0.000	0.003
5-Apr-2016	14:34:34	0.000	0.000
5-Apr-2016	14:38:34	0.000	0.000
5-Apr-2016	14:42:34	0.001	0.000
5-Apr-2016	14:46:34	0.000	0.000
5-Apr-2016	14:50:34	0.000	0.000
5-Apr-2016	14:54:34	0.000	0.000
6-Apr-2016	08:28:36	0.001	0.001
6-Apr-2016	08:32:36	0.001	0.001
6-Apr-2016	08:36:36	0.001	0.001
6-Apr-2016	08:40:36	0.002	0.002
6-Apr-2016	08:44:36	0.002	0.001
6-Apr-2016	08:48:36	0.000	0.001

DUST MONITORING

April 2016

shading indicates values over the threshold

Monitor: 2

Threshold: 0.15 (mg/m^3)

Date	Time	Value (mg/m^3)	TWA (mg/m^3)
6-Apr-2016	08:52:36	0.001	0.001
6-Apr-2016	08:56:36	0.001	0.001
6-Apr-2016	09:00:36	0.000	0.000
6-Apr-2016	09:04:36	0.000	0.000
6-Apr-2016	09:08:36	0.000	0.000
6-Apr-2016	09:12:36	0.001	0.000
6-Apr-2016	09:16:36	0.000	0.000
6-Apr-2016	09:20:36	0.000	0.000
6-Apr-2016	09:24:36	0.000	0.000
6-Apr-2016	09:28:36	0.000	0.000
6-Apr-2016	09:32:36	0.000	0.000
6-Apr-2016	09:36:36	0.000	0.000
6-Apr-2016	09:40:36	0.000	0.000
6-Apr-2016	09:44:36	0.001	0.001
6-Apr-2016	09:48:36	0.001	0.001
6-Apr-2016	09:52:36	0.000	0.000
6-Apr-2016	09:56:36	0.000	0.000
6-Apr-2016	10:00:36	0.000	0.001
6-Apr-2016	10:04:36	0.004	0.001
6-Apr-2016	10:08:36	0.000	0.002
6-Apr-2016	10:12:36	0.002	0.001
6-Apr-2016	10:16:36	0.000	0.001
6-Apr-2016	10:20:36	0.002	0.002
6-Apr-2016	10:24:36	0.003	0.002
6-Apr-2016	10:28:36	0.000	0.001
6-Apr-2016	10:32:36	0.000	0.000
6-Apr-2016	10:36:36	0.000	0.000
6-Apr-2016	10:40:36	0.000	0.000
6-Apr-2016	10:44:36	0.000	0.000
6-Apr-2016	10:48:36	0.000	0.000
6-Apr-2016	10:52:36	0.000	0.000
6-Apr-2016	10:56:36	0.000	0.000
6-Apr-2016	11:00:36	0.001	0.001
6-Apr-2016	11:04:36	0.001	0.001
6-Apr-2016	11:08:36	0.000	0.001
6-Apr-2016	11:12:36	0.001	0.003
6-Apr-2016	11:16:36	0.008	0.003
6-Apr-2016	11:20:36	0.001	0.004
6-Apr-2016	11:24:36	0.002	0.001
6-Apr-2016	11:28:36	0.001	0.001
6-Apr-2016	11:32:36	0.001	0.001

DUST MONITORING

April 2016

shading indicates values over the threshold

Monitor: 2

Threshold: 0.15 (mg/m^3)

Date	Time	Value (mg/m^3)	TWA (mg/m^3)
6-Apr-2016	11:36:36	0.002	0.001
6-Apr-2016	11:40:36	0.000	0.001
6-Apr-2016	11:44:36	0.000	0.000
6-Apr-2016	11:48:36	0.000	0.000
6-Apr-2016	11:52:36	0.000	0.000
6-Apr-2016	11:56:36	0.000	0.000
6-Apr-2016	12:00:36	0.000	0.000
6-Apr-2016	12:04:36	0.001	0.000
6-Apr-2016	12:08:36	0.000	0.000
6-Apr-2016	12:12:36	0.000	0.000
6-Apr-2016	12:16:36	0.000	0.000
6-Apr-2016	12:20:36	0.001	0.001
6-Apr-2016	12:24:36	0.001	0.001
6-Apr-2016	12:28:36	0.000	0.001
6-Apr-2016	12:32:36	0.002	0.001
6-Apr-2016	12:36:36	0.000	0.002
6-Apr-2016	12:40:36	0.005	0.003
6-Apr-2016	12:44:36	0.003	0.004
6-Apr-2016	12:48:36	0.004	0.019
6-Apr-2016	12:52:36	0.050	0.023
6-Apr-2016	12:56:36	0.014	0.022
6-Apr-2016	13:00:36	0.002	0.009
6-Apr-2016	13:04:36	0.011	0.012
6-Apr-2016	13:08:36	0.022	0.012
6-Apr-2016	13:12:36	0.003	0.009
6-Apr-2016	13:16:36	0.002	0.002
6-Apr-2016	13:20:36	0.001	0.003
6-Apr-2016	13:24:36	0.005	0.003
6-Apr-2016	13:28:36	0.003	0.003
6-Apr-2016	13:32:36	0.001	0.003
6-Apr-2016	13:36:36	0.004	0.002
6-Apr-2016	13:40:36	0.002	0.002
6-Apr-2016	13:44:36	0.001	0.001
6-Apr-2016	13:48:36	0.001	0.002
6-Apr-2016	13:52:36	0.004	0.002
6-Apr-2016	13:56:36	0.002	0.002
6-Apr-2016	14:00:36	0.000	0.001
6-Apr-2016	14:04:36	0.002	0.001
6-Apr-2016	14:08:36	0.002	0.002
6-Apr-2016	14:12:36	0.001	0.001
6-Apr-2016	14:16:36	0.001	0.002

DUST MONITORING

April 2016

shading indicates values over the threshold

Monitor: 2

Threshold: 0.15 (mg/m^3)

Date	Time	Value (mg/m^3)	TWA (mg/m^3)
6-Apr-2016	14:20:36	0.003	0.004
6-Apr-2016	14:24:36	0.009	0.005
6-Apr-2016	14:28:36	0.003	0.004
6-Apr-2016	14:32:36	0.000	0.001
6-Apr-2016	14:36:36	0.001	0.014
6-Apr-2016	14:40:36	0.042	0.016
6-Apr-2016	14:44:36	0.005	0.017
6-Apr-2016	14:48:36	0.004	0.004
6-Apr-2016	14:52:36	0.004	0.003
6-Apr-2016	14:56:36	0.002	0.002
6-Apr-2016	15:00:36	0.000	0.001
6-Apr-2016	15:04:36	0.002	0.003
6-Apr-2016	15:08:36	0.008	0.006
6-Apr-2016	15:12:36	0.007	0.008
6-Apr-2016	15:16:36	0.009	0.011
6-Apr-2016	15:20:36	0.018	0.009
6-Apr-2016	15:24:36	0.000	0.006
6-Apr-2016	15:28:36	0.001	0.000
6-Apr-2016	15:32:36	0.000	0.001
6-Apr-2016	15:36:36	0.002	0.001
6-Apr-2016	15:40:36	0.000	0.002
6-Apr-2016	15:44:36	0.004	0.002
6-Apr-2016	15:48:36	0.002	0.002
6-Apr-2016	15:52:36	0.001	0.009
6-Apr-2016	15:56:36	0.023	0.012
8-Apr-2016	08:52:56	0.005	0.013
8-Apr-2016	08:56:56	0.021	0.014
8-Apr-2016	09:00:56	0.017	0.033
8-Apr-2016	09:04:56	0.060	0.038
8-Apr-2016	09:08:56	0.038	0.095
8-Apr-2016	09:12:56	0.188	0.181
8-Apr-2016	09:16:56	0.318	0.189
8-Apr-2016	09:20:56	0.060	0.129
8-Apr-2016	09:24:56	0.010	0.025
8-Apr-2016	09:28:56	0.004	0.040
8-Apr-2016	09:32:56	0.106	0.045
8-Apr-2016	09:36:56	0.024	0.066
8-Apr-2016	09:40:56	0.067	0.037
8-Apr-2016	09:44:56	0.019	0.031
8-Apr-2016	09:48:56	0.006	0.011
8-Apr-2016	09:52:56	0.007	0.005

DUST MONITORING

April 2016

shading indicates values over the threshold

Monitor: 2

Threshold: 0.15 (mg/m^3)

Date	Time	Value (mg/m^3)	TWA (mg/m^3)
8-Apr-2016	09:56:56	0.003	0.012
8-Apr-2016	10:00:56	0.027	0.013
8-Apr-2016	10:04:56	0.008	0.018
8-Apr-2016	10:08:56	0.019	0.044
8-Apr-2016	10:12:56	0.104	0.043
8-Apr-2016	10:16:56	0.005	0.058
8-Apr-2016	10:20:56	0.064	0.039
8-Apr-2016	10:24:56	0.047	0.049
8-Apr-2016	10:28:56	0.036	0.043
8-Apr-2016	10:32:56	0.047	0.061
8-Apr-2016	10:36:56	0.099	0.065
8-Apr-2016	10:40:56	0.049	0.058
8-Apr-2016	10:44:56	0.026	0.034
8-Apr-2016	10:48:56	0.027	0.023
8-Apr-2016	10:52:56	0.016	0.020
8-Apr-2016	10:56:56	0.016	0.018
8-Apr-2016	11:00:56	0.022	0.014
8-Apr-2016	11:04:56	0.005	0.017
8-Apr-2016	11:08:56	0.024	0.011
8-Apr-2016	11:12:56	0.005	0.011
8-Apr-2016	11:16:56	0.005	0.005
8-Apr-2016	11:20:56	0.006	0.009
8-Apr-2016	11:24:56	0.015	0.011
11-Apr-2016	09:50:34	0.053	0.046
11-Apr-2016	09:54:34	0.038	0.042
11-Apr-2016	09:58:34	0.036	0.037
11-Apr-2016	10:02:34	0.036	0.036
11-Apr-2016	10:06:34	0.037	0.036
11-Apr-2016	10:10:34	0.036	0.036
11-Apr-2016	10:14:34	0.035	0.036
11-Apr-2016	10:18:34	0.036	0.036
11-Apr-2016	10:22:34	0.036	0.036
11-Apr-2016	10:26:34	0.037	0.036
11-Apr-2016	10:30:34	0.036	0.036
11-Apr-2016	10:34:34	0.035	0.035
11-Apr-2016	10:38:34	0.033	0.034
11-Apr-2016	10:42:34	0.035	0.035
11-Apr-2016	10:46:34	0.038	0.042
11-Apr-2016	10:50:34	0.052	0.044
11-Apr-2016	10:54:34	0.043	0.053
11-Apr-2016	10:58:34	0.063	0.050

DUST MONITORING

April 2016

shading indicates values over the threshold

Monitor: 2

Threshold: 0.15 (mg/m^3)

Date	Time	Value (mg/m^3)	TWA (mg/m^3)
11-Apr-2016	11:02:34	0.044	0.057
11-Apr-2016	11:06:34	0.065	0.053
11-Apr-2016	11:10:34	0.049	0.052
11-Apr-2016	11:14:34	0.042	0.044
11-Apr-2016	11:18:34	0.040	0.041
11-Apr-2016	11:22:34	0.042	0.041
11-Apr-2016	11:26:34	0.041	0.041
11-Apr-2016	11:30:34	0.039	0.040
11-Apr-2016	11:34:34	0.039	0.039
11-Apr-2016	11:38:34	0.038	0.039
11-Apr-2016	11:42:34	0.040	0.039
11-Apr-2016	11:46:34	0.040	0.039
11-Apr-2016	11:50:34	0.037	0.038
11-Apr-2016	11:54:34	0.037	0.037
11-Apr-2016	11:58:34	0.037	0.037
11-Apr-2016	12:02:34	0.037	0.037
11-Apr-2016	12:06:34	0.037	0.037
11-Apr-2016	12:10:34	0.037	0.037
11-Apr-2016	12:14:34	0.037	0.039
11-Apr-2016	12:18:34	0.043	0.039
11-Apr-2016	12:22:34	0.038	0.040
11-Apr-2016	12:26:34	0.038	0.038
11-Apr-2016	12:30:34	0.039	0.039
11-Apr-2016	12:34:34	0.039	0.040
11-Apr-2016	12:38:34	0.041	0.040
11-Apr-2016	12:42:34	0.041	0.042
11-Apr-2016	12:46:34	0.044	0.042
11-Apr-2016	12:50:34	0.040	0.041
11-Apr-2016	12:54:34	0.039	0.040
11-Apr-2016	12:58:34	0.040	0.042
11-Apr-2016	13:02:34	0.048	0.043
11-Apr-2016	13:06:34	0.042	0.045
11-Apr-2016	13:10:34	0.044	0.048
11-Apr-2016	13:14:34	0.057	0.055
11-Apr-2016	13:18:34	0.065	0.104
11-Apr-2016	13:22:34	0.189	0.102
11-Apr-2016	13:26:34	0.051	0.099
11-Apr-2016	13:30:34	0.057	0.084
11-Apr-2016	13:34:34	0.143	0.096
11-Apr-2016	13:38:34	0.089	0.096
11-Apr-2016	13:42:34	0.057	0.063

DUST MONITORING

April 2016

shading indicates values over the threshold

Monitor: 2

Threshold: 0.15 (mg/m^3)

Date	Time	Value (mg/m^3)	TWA (mg/m^3)
11-Apr-2016	13:46:34	0.042	0.050
13-Apr-2016	08:19:44	0.046	0.045
13-Apr-2016	08:23:44	0.043	0.043
13-Apr-2016	08:27:44	0.040	0.041
13-Apr-2016	08:31:44	0.039	0.039
13-Apr-2016	08:35:44	0.038	0.039
13-Apr-2016	08:39:44	0.039	0.039
13-Apr-2016	08:43:44	0.041	0.038
13-Apr-2016	08:47:44	0.035	0.037
13-Apr-2016	08:51:44	0.034	0.035
13-Apr-2016	08:55:44	0.035	0.034
13-Apr-2016	08:59:44	0.034	0.034
13-Apr-2016	09:03:44	0.034	0.034
13-Apr-2016	09:07:44	0.035	0.035
13-Apr-2016	09:11:44	0.035	0.035
13-Apr-2016	09:15:44	0.035	0.035
13-Apr-2016	09:19:44	0.034	0.035
13-Apr-2016	09:23:44	0.035	0.035
13-Apr-2016	09:27:44	0.036	0.035
13-Apr-2016	09:31:44	0.035	0.036
13-Apr-2016	09:35:44	0.037	0.036
13-Apr-2016	09:39:44	0.037	0.037
13-Apr-2016	09:43:44	0.036	0.037
13-Apr-2016	09:47:44	0.037	0.036
13-Apr-2016	09:51:44	0.036	0.036
13-Apr-2016	09:55:44	0.036	0.036
13-Apr-2016	09:59:44	0.036	0.036
13-Apr-2016	10:03:44	0.036	0.037
13-Apr-2016	10:07:44	0.039	0.037
13-Apr-2016	10:11:44	0.036	0.037
13-Apr-2016	10:15:44	0.036	0.036
13-Apr-2016	10:19:44	0.036	0.036
13-Apr-2016	10:23:44	0.036	0.036
13-Apr-2016	10:27:44	0.037	0.037
13-Apr-2016	10:31:44	0.038	0.038
13-Apr-2016	10:35:44	0.039	0.039
13-Apr-2016	10:39:44	0.040	0.040
13-Apr-2016	10:43:44	0.040	0.040
13-Apr-2016	10:47:44	0.041	0.040
13-Apr-2016	10:51:44	0.040	0.041
13-Apr-2016	10:55:44	0.041	0.040

DUST MONITORING

April 2016

shading indicates values over the threshold

Monitor: 2

Threshold: 0.15 (mg/m^3)

Date	Time	Value (mg/m^3)	TWA (mg/m^3)
13-Apr-2016	10:59:44	0.038	0.039
13-Apr-2016	11:03:44	0.038	0.038
13-Apr-2016	11:07:44	0.039	0.038
13-Apr-2016	11:11:44	0.037	0.038
13-Apr-2016	11:15:44	0.037	0.037
13-Apr-2016	11:19:44	0.037	0.037
13-Apr-2016	11:23:44	0.036	0.036
13-Apr-2016	11:27:44	0.036	0.037
13-Apr-2016	11:31:44	0.039	0.038
13-Apr-2016	11:35:44	0.038	0.039
13-Apr-2016	11:39:44	0.039	0.039
13-Apr-2016	11:43:44	0.040	0.040
13-Apr-2016	11:47:44	0.041	0.040
13-Apr-2016	11:51:44	0.039	0.039
13-Apr-2016	11:55:44	0.038	0.038
13-Apr-2016	11:59:44	0.038	0.037
13-Apr-2016	12:03:44	0.036	0.037
13-Apr-2016	12:07:44	0.037	0.036
13-Apr-2016	12:11:44	0.036	0.036
13-Apr-2016	12:15:44	0.036	0.036
13-Apr-2016	12:19:44	0.035	0.035
13-Apr-2016	12:23:44	0.035	0.036
13-Apr-2016	12:27:44	0.037	0.037
13-Apr-2016	12:31:44	0.038	0.037
13-Apr-2016	12:35:44	0.037	0.037
13-Apr-2016	12:39:44	0.036	0.036
13-Apr-2016	12:43:44	0.036	0.036
13-Apr-2016	12:47:44	0.036	0.036
13-Apr-2016	12:51:44	0.035	0.036
13-Apr-2016	12:55:44	0.036	0.036
13-Apr-2016	12:59:44	0.038	0.037
13-Apr-2016	13:03:44	0.036	0.037
13-Apr-2016	13:07:44	0.036	0.036
13-Apr-2016	13:11:44	0.035	0.035
13-Apr-2016	13:15:44	0.035	0.035
13-Apr-2016	13:19:44	0.036	0.036
13-Apr-2016	13:23:44	0.036	0.037
13-Apr-2016	13:27:44	0.038	0.037
13-Apr-2016	13:31:44	0.038	0.038
13-Apr-2016	13:35:44	0.039	0.038
13-Apr-2016	13:39:44	0.038	0.038

DUST MONITORING

April 2016

shading indicates values over the threshold

Monitor: 2

Threshold: 0.15 (mg/m^3)

Date	Time	Value (mg/m^3)	TWA (mg/m^3)
13-Apr-2016	13:43:44	0.038	0.038
19-Apr-2016	10:03:38	0.049	0.046
19-Apr-2016	10:07:38	0.043	0.044
19-Apr-2016	10:11:38	0.039	0.040
19-Apr-2016	10:15:38	0.038	0.038
19-Apr-2016	10:19:38	0.038	0.038
19-Apr-2016	10:23:38	0.038	0.038
19-Apr-2016	10:27:38	0.037	0.037
19-Apr-2016	10:31:38	0.037	0.037
19-Apr-2016	10:35:38	0.037	0.038
19-Apr-2016	10:39:38	0.039	0.038
19-Apr-2016	10:43:38	0.039	0.042
19-Apr-2016	10:47:38	0.048	0.051
19-Apr-2016	10:51:38	0.065	0.053
19-Apr-2016	10:55:38	0.046	0.051
19-Apr-2016	10:59:38	0.041	0.045
19-Apr-2016	11:03:38	0.047	0.045
19-Apr-2016	11:07:38	0.047	0.048
19-Apr-2016	11:11:38	0.049	0.048
19-Apr-2016	11:15:38	0.049	0.050
19-Apr-2016	11:19:38	0.051	0.050
20-Apr-2016	09:20:23	0.037	0.037
20-Apr-2016	09:24:23	0.037	0.037
20-Apr-2016	09:28:23	0.037	0.040
20-Apr-2016	09:32:23	0.046	0.043
20-Apr-2016	09:36:23	0.045	0.049
20-Apr-2016	09:40:23	0.055	0.052
20-Apr-2016	09:44:23	0.055	0.054
20-Apr-2016	09:48:23	0.053	0.055
20-Apr-2016	09:52:23	0.056	0.058
20-Apr-2016	09:56:23	0.064	0.080
20-Apr-2016	10:00:23	0.119	0.082
20-Apr-2016	10:04:23	0.063	0.078
20-Apr-2016	10:08:23	0.052	0.057
20-Apr-2016	10:12:23	0.057	0.068
20-Apr-2016	10:16:23	0.096	0.077
20-Apr-2016	10:20:23	0.077	0.083
20-Apr-2016	10:24:23	0.077	0.073
20-Apr-2016	10:28:23	0.065	0.066
20-Apr-2016	10:32:23	0.056	0.058
20-Apr-2016	10:36:23	0.053	0.054

DUST MONITORING

April 2016

shading indicates values over the threshold

Monitor: 2

Threshold: 0.15 (mg/m^3)

Date	Time	Value (mg/m^3)	TWA (mg/m^3)
20-Apr-2016	10:40:23	0.053	0.052
20-Apr-2016	10:44:23	0.051	0.051
20-Apr-2016	10:48:23	0.050	0.050
20-Apr-2016	10:52:23	0.049	0.050
20-Apr-2016	10:56:23	0.051	0.051
20-Apr-2016	11:00:23	0.054	0.052
20-Apr-2016	11:04:23	0.052	0.053
20-Apr-2016	11:08:23	0.053	0.052
20-Apr-2016	11:12:23	0.051	0.053
20-Apr-2016	11:16:23	0.054	0.053
20-Apr-2016	11:20:23	0.053	0.053
20-Apr-2016	11:24:23	0.051	0.051
20-Apr-2016	11:28:23	0.050	0.050
20-Apr-2016	11:32:23	0.049	0.050
20-Apr-2016	11:36:23	0.050	0.048
20-Apr-2016	11:40:23	0.046	0.048
20-Apr-2016	11:44:23	0.049	0.049
20-Apr-2016	11:48:23	0.051	0.052
20-Apr-2016	11:52:23	0.055	0.053
20-Apr-2016	11:56:23	0.053	0.056
20-Apr-2016	12:00:23	0.061	0.056
20-Apr-2016	12:04:23	0.055	0.067
20-Apr-2016	12:08:23	0.084	0.080
20-Apr-2016	12:12:23	0.101	0.080
20-Apr-2016	12:16:23	0.055	0.068
20-Apr-2016	12:20:23	0.049	0.052
20-Apr-2016	12:24:23	0.052	0.050
20-Apr-2016	12:28:23	0.050	0.051
20-Apr-2016	12:32:23	0.052	0.054
20-Apr-2016	12:36:23	0.059	0.055
20-Apr-2016	12:40:23	0.053	0.053
20-Apr-2016	12:44:23	0.048	0.049
20-Apr-2016	12:48:23	0.045	0.048
20-Apr-2016	12:52:23	0.050	0.047
20-Apr-2016	12:56:23	0.047	0.050
20-Apr-2016	13:00:23	0.052	0.050
20-Apr-2016	13:04:23	0.050	0.050
20-Apr-2016	13:08:23	0.047	0.048
20-Apr-2016	13:12:23	0.047	0.059
20-Apr-2016	13:16:23	0.083	0.060
20-Apr-2016	13:20:23	0.051	0.062

DUST MONITORING

April 2016

shading indicates values over the threshold

Monitor: 2

Threshold: 0.15 (mg/m^3)

Date	Time	Value (mg/m^3)	TWA (mg/m^3)
20-Apr-2016	13:24:23	0.051	0.051
20-Apr-2016	13:28:23	0.050	0.051
20-Apr-2016	13:32:23	0.051	0.050
20-Apr-2016	13:36:23	0.049	0.053
20-Apr-2016	13:40:23	0.059	0.053
20-Apr-2016	13:44:23	0.052	0.054
20-Apr-2016	13:48:23	0.051	0.055
20-Apr-2016	13:52:23	0.062	0.055
20-Apr-2016	13:56:23	0.052	0.056
20-Apr-2016	14:00:23	0.053	0.053
20-Apr-2016	14:04:23	0.054	0.053
20-Apr-2016	14:08:23	0.051	0.053
20-Apr-2016	14:12:23	0.054	0.052
20-Apr-2016	14:16:23	0.052	0.053
20-Apr-2016	14:20:23	0.054	0.054
20-Apr-2016	14:24:23	0.056	0.056
20-Apr-2016	14:28:23	0.057	0.055
20-Apr-2016	14:32:23	0.053	0.053
20-Apr-2016	14:36:23	0.048	0.052
20-Apr-2016	14:40:23	0.054	0.053
20-Apr-2016	14:44:23	0.058	0.057
20-Apr-2016	14:48:23	0.059	0.058
20-Apr-2016	14:52:23	0.058	0.058
20-Apr-2016	14:56:23	0.057	0.056
20-Apr-2016	15:00:23	0.054	0.056
20-Apr-2016	15:04:23	0.058	0.060
20-Apr-2016	15:08:23	0.067	0.064
20-Apr-2016	15:12:23	0.066	0.064
20-Apr-2016	15:16:23	0.059	0.062
20-Apr-2016	15:20:23	0.061	0.060
20-Apr-2016	15:24:23	0.059	0.060
20-Apr-2016	15:28:23	0.061	0.063
20-Apr-2016	15:32:23	0.069	0.064
20-Apr-2016	15:36:23	0.063	0.064
20-Apr-2016	15:40:23	0.060	0.059
20-Apr-2016	15:44:23	0.053	0.057
20-Apr-2016	15:48:23	0.057	0.056
20-Apr-2016	15:52:23	0.059	0.060
20-Apr-2016	15:56:23	0.064	0.059
20-Apr-2016	16:00:23	0.055	0.060
27-Apr-2016	07:16:34	0.041	0.040

DUST MONITORING

April 2016

shading indicates values over the threshold

Monitor: 2

Threshold: 0.15 (mg/m^3)

Date	Time	Value (mg/m^3)	TWA (mg/m^3)
27-Apr-2016	07:20:34	0.038	0.036
27-Apr-2016	07:24:34	0.030	0.033
27-Apr-2016	07:28:34	0.031	0.031
27-Apr-2016	07:32:34	0.031	0.031
27-Apr-2016	07:36:34	0.032	0.031
27-Apr-2016	07:40:34	0.029	0.030
27-Apr-2016	07:44:34	0.028	0.029
27-Apr-2016	07:48:34	0.031	0.029
27-Apr-2016	07:52:34	0.028	0.029
27-Apr-2016	07:56:34	0.028	0.028
27-Apr-2016	08:00:34	0.028	0.030
27-Apr-2016	08:04:34	0.033	0.030
27-Apr-2016	08:08:34	0.028	0.031
27-Apr-2016	08:12:34	0.031	0.029
27-Apr-2016	08:16:34	0.027	0.029
27-Apr-2016	08:20:34	0.028	0.028
27-Apr-2016	08:24:34	0.028	0.030
27-Apr-2016	08:28:34	0.034	0.031
27-Apr-2016	08:32:34	0.030	0.031
27-Apr-2016	08:36:34	0.030	0.030
27-Apr-2016	08:40:34	0.031	0.032
27-Apr-2016	08:44:34	0.036	0.032
27-Apr-2016	08:48:34	0.029	0.031
27-Apr-2016	08:52:34	0.029	0.029
27-Apr-2016	08:56:34	0.029	0.029
27-Apr-2016	09:00:34	0.029	0.029
27-Apr-2016	09:04:34	0.029	0.029
27-Apr-2016	09:08:34	0.029	0.030
27-Apr-2016	09:12:34	0.032	0.030
27-Apr-2016	09:16:34	0.028	0.030
27-Apr-2016	09:20:34	0.029	0.029
27-Apr-2016	09:24:34	0.030	0.030
27-Apr-2016	09:28:34	0.031	0.030
27-Apr-2016	09:32:34	0.030	0.030
27-Apr-2016	09:36:34	0.030	0.030
27-Apr-2016	09:40:34	0.031	0.031
27-Apr-2016	09:44:34	0.032	0.031
27-Apr-2016	09:48:34	0.031	0.038
27-Apr-2016	09:52:34	0.052	0.038
27-Apr-2016	09:56:34	0.030	0.037
27-Apr-2016	10:00:34	0.030	0.031

DUST MONITORING

April 2016

shading indicates values over the threshold

Monitor: 2

Threshold: 0.15 (mg/m^3)

Date	Time	Value (mg/m^3)	TWA (mg/m^3)
27-Apr-2016	10:04:34	0.032	0.031
27-Apr-2016	10:08:34	0.032	0.032
27-Apr-2016	10:12:34	0.031	0.031
27-Apr-2016	10:16:34	0.030	0.031
27-Apr-2016	10:20:34	0.032	0.032
27-Apr-2016	10:24:34	0.033	0.038
27-Apr-2016	10:28:34	0.050	0.042
27-Apr-2016	10:32:34	0.043	0.043
27-Apr-2016	10:36:34	0.035	0.037
27-Apr-2016	10:40:34	0.033	0.034
27-Apr-2016	10:44:34	0.035	0.034
27-Apr-2016	10:48:34	0.035	0.034
27-Apr-2016	10:52:34	0.032	0.034
27-Apr-2016	10:56:34	0.036	0.034
27-Apr-2016	11:00:34	0.033	0.035
27-Apr-2016	11:04:34	0.035	0.035
27-Apr-2016	11:08:34	0.036	0.035
27-Apr-2016	11:12:34	0.035	0.035
27-Apr-2016	11:16:34	0.034	0.035
27-Apr-2016	11:20:34	0.035	0.034
27-Apr-2016	11:24:34	0.033	0.033
27-Apr-2016	11:28:34	0.032	0.033
27-Apr-2016	11:32:34	0.033	0.035
27-Apr-2016	11:36:34	0.039	0.036
27-Apr-2016	11:40:34	0.036	0.036
27-Apr-2016	11:44:34	0.032	0.034
27-Apr-2016	11:48:34	0.033	0.032
27-Apr-2016	11:52:34	0.032	0.033
27-Apr-2016	11:56:34	0.035	0.035
27-Apr-2016	12:00:34	0.039	0.037
27-Apr-2016	12:04:34	0.038	0.038
27-Apr-2016	12:08:34	0.037	0.036
27-Apr-2016	12:12:34	0.034	0.035
27-Apr-2016	12:16:34	0.035	0.035
27-Apr-2016	12:20:34	0.036	0.036
27-Apr-2016	12:24:34	0.036	0.035
27-Apr-2016	12:28:34	0.033	0.034
27-Apr-2016	12:32:34	0.034	0.034
27-Apr-2016	12:36:34	0.036	0.035
27-Apr-2016	12:40:34	0.034	0.035
27-Apr-2016	12:44:34	0.036	0.037

DUST MONITORING

April 2016

shading indicates values over the threshold

Monitor: 2

Threshold: 0.15 (mg/m^3)

Date	Time	Value (mg/m^3)	TWA (mg/m^3)
27-Apr-2016	12:48:34	0.042	0.040
27-Apr-2016	12:52:34	0.041	0.040
27-Apr-2016	12:56:34	0.037	0.039
27-Apr-2016	13:00:34	0.038	0.037
27-Apr-2016	13:04:34	0.036	0.038
27-Apr-2016	13:08:34	0.039	0.038
27-Apr-2016	13:12:34	0.040	0.039
27-Apr-2016	13:16:34	0.038	0.038
27-Apr-2016	13:20:34	0.036	0.039
27-Apr-2016	13:24:34	0.044	0.043
27-Apr-2016	13:28:34	0.048	0.046
27-Apr-2016	13:32:34	0.047	0.047
27-Apr-2016	13:36:34	0.045	0.044
27-Apr-2016	13:40:34	0.040	0.041
27-Apr-2016	13:44:34	0.039	0.040
27-Apr-2016	13:48:34	0.040	0.039
27-Apr-2016	13:52:34	0.037	0.043
27-Apr-2016	13:56:34	0.052	0.043
27-Apr-2016	14:00:34	0.039	0.043
27-Apr-2016	14:04:34	0.039	0.039
27-Apr-2016	14:08:34	0.040	0.039
27-Apr-2016	14:12:34	0.039	0.043
27-Apr-2016	14:16:34	0.049	0.045
27-Apr-2016	14:20:34	0.048	0.046
27-Apr-2016	14:24:34	0.040	0.042
27-Apr-2016	14:28:34	0.038	0.039
27-Apr-2016	14:32:34	0.039	0.039
27-Apr-2016	14:36:34	0.039	0.039
27-Apr-2016	14:40:34	0.039	0.038
27-Apr-2016	14:44:34	0.037	0.038
27-Apr-2016	14:48:34	0.038	0.038
27-Apr-2016	14:52:34	0.039	0.039
27-Apr-2016	14:56:34	0.039	0.039
27-Apr-2016	15:00:34	0.040	0.046
27-Apr-2016	15:04:34	0.058	0.046
27-Apr-2016	15:08:34	0.041	0.047
27-Apr-2016	15:12:34	0.041	0.041
27-Apr-2016	15:16:34	0.042	0.045
27-Apr-2016	15:20:34	0.052	0.045
27-Apr-2016	15:24:34	0.042	0.046
27-Apr-2016	15:28:34	0.045	0.043

DUST MONITORING

April 2016

shading indicates values over the threshold

Monitor: 2

Threshold: 0.15 (mg/m^3)

Date	Time	Value (mg/m^3)	TWA (mg/m^3)
27-Apr-2016	15:32:34	0.043	0.043
27-Apr-2016	15:36:34	0.042	0.056
27-Apr-2016	15:40:34	0.083	0.064
27-Apr-2016	15:44:34	0.066	0.075
29-Apr-2016	07:18:55	0.050	0.049
29-Apr-2016	07:22:55	0.047	0.048
29-Apr-2016	07:26:55	0.047	0.047
29-Apr-2016	07:30:55	0.047	0.047
29-Apr-2016	07:34:55	0.047	0.047
29-Apr-2016	07:38:55	0.046	0.047
29-Apr-2016	07:42:55	0.047	0.047
29-Apr-2016	07:46:55	0.049	0.048
29-Apr-2016	07:50:55	0.048	0.048
29-Apr-2016	07:54:55	0.047	0.048
29-Apr-2016	07:58:55	0.048	0.047
29-Apr-2016	08:02:55	0.047	0.047
29-Apr-2016	08:06:55	0.046	0.047
29-Apr-2016	08:10:55	0.047	0.047
29-Apr-2016	08:14:55	0.049	0.049
29-Apr-2016	08:18:55	0.050	0.049
29-Apr-2016	08:22:55	0.048	0.048
29-Apr-2016	08:26:55	0.047	0.045
29-Apr-2016	08:30:55	0.039	0.041
29-Apr-2016	08:34:55	0.038	0.042
29-Apr-2016	08:38:55	0.049	0.042
29-Apr-2016	08:42:55	0.040	0.043
29-Apr-2016	08:46:55	0.040	0.039
29-Apr-2016	08:50:55	0.037	0.038
29-Apr-2016	08:54:55	0.036	0.036
29-Apr-2016	08:58:55	0.036	0.036
29-Apr-2016	09:02:55	0.037	0.036
29-Apr-2016	09:06:55	0.036	0.039
29-Apr-2016	09:10:55	0.043	0.038
29-Apr-2016	09:14:55	0.035	0.038
29-Apr-2016	09:18:55	0.037	0.036
29-Apr-2016	09:22:55	0.037	0.037
29-Apr-2016	09:26:55	0.037	0.037
29-Apr-2016	09:30:55	0.036	0.037
29-Apr-2016	09:34:55	0.037	0.037
29-Apr-2016	09:38:55	0.039	0.038
29-Apr-2016	09:42:55	0.038	0.039

DUST MONITORING

April 2016

shading indicates values over the threshold

Monitor: 2

Threshold: 0.15 (mg/m^3)

Date	Time	Value (mg/m^3)	TWA (mg/m^3)
29-Apr-2016	09:46:55	0.040	0.040
29-Apr-2016	09:50:55	0.041	0.040
29-Apr-2016	09:54:55	0.040	0.040
29-Apr-2016	09:58:55	0.039	0.039
29-Apr-2016	10:02:55	0.037	0.038
29-Apr-2016	10:06:55	0.037	0.038
29-Apr-2016	10:10:55	0.039	0.037
29-Apr-2016	10:14:55	0.035	0.036
29-Apr-2016	10:18:55	0.035	0.035
29-Apr-2016	10:22:55	0.035	0.036
29-Apr-2016	10:26:55	0.037	0.037
29-Apr-2016	10:30:55	0.039	0.039
29-Apr-2016	10:34:55	0.042	0.041
29-Apr-2016	10:38:55	0.043	0.042
29-Apr-2016	10:42:55	0.041	0.040
29-Apr-2016	10:46:55	0.037	0.039
29-Apr-2016	10:50:55	0.040	0.044
29-Apr-2016	10:54:55	0.055	0.057
29-Apr-2016	10:58:55	0.077	0.058
29-Apr-2016	11:02:55	0.042	0.054
29-Apr-2016	11:06:55	0.043	0.041
29-Apr-2016	11:10:55	0.037	0.039
29-Apr-2016	11:14:55	0.037	0.037
29-Apr-2016	11:18:55	0.037	0.037
29-Apr-2016	11:22:55	0.038	0.037
29-Apr-2016	11:26:55	0.037	0.038
29-Apr-2016	11:30:55	0.038	0.038
29-Apr-2016	11:34:55	0.038	0.038
29-Apr-2016	11:38:55	0.038	0.038
29-Apr-2016	11:42:55	0.038	0.039
29-Apr-2016	11:46:55	0.040	0.047
29-Apr-2016	11:50:55	0.062	0.047
29-Apr-2016	11:54:55	0.038	0.046
29-Apr-2016	11:58:55	0.038	0.038
29-Apr-2016	12:02:55	0.038	0.038
29-Apr-2016	12:06:55	0.038	0.038
29-Apr-2016	12:10:55	0.038	0.038
29-Apr-2016	12:14:55	0.038	0.038
29-Apr-2016	12:18:55	0.038	0.037
29-Apr-2016	12:22:55	0.036	0.037
29-Apr-2016	12:26:55	0.036	0.036

DUST MONITORING

April 2016

shading indicates values over the threshold

Monitor: 2

Threshold: 0.15 (mg/m^3)

Date	Time	Value (mg/m^3)	TWA (mg/m^3)
29-Apr-2016	12:30:55	0.035	0.036
29-Apr-2016	12:34:55	0.036	0.036
29-Apr-2016	12:38:55	0.038	0.037
29-Apr-2016	12:42:55	0.037	0.048
29-Apr-2016	12:46:55	0.070	0.052
29-Apr-2016	12:50:55	0.048	0.052
29-Apr-2016	12:54:55	0.039	0.043
29-Apr-2016	12:58:55	0.042	0.039
29-Apr-2016	13:02:55	0.037	0.047
29-Apr-2016	13:06:55	0.062	0.047
29-Apr-2016	13:10:55	0.042	0.048
29-Apr-2016	13:14:55	0.040	0.042
29-Apr-2016	13:18:55	0.044	0.042
29-Apr-2016	13:22:55	0.042	0.043
29-Apr-2016	13:26:55	0.042	0.055
29-Apr-2016	13:30:55	0.081	0.054
29-Apr-2016	13:34:55	0.039	0.061
29-Apr-2016	13:38:55	0.062	0.047
29-Apr-2016	13:42:55	0.041	0.049
29-Apr-2016	13:46:55	0.043	0.072
29-Apr-2016	13:50:55	0.131	0.072
29-Apr-2016	13:54:55	0.043	0.072
29-Apr-2016	13:58:55	0.043	0.066
29-Apr-2016	14:02:55	0.112	0.078

DUST MONITORING

April 2016

shading indicates values over the threshold

Monitor: 3

Threshold: 0.15 (mg/m^3)

Date	Time	Value (mg/m^3)	TWA (mg/m^3)
5-Apr-2016	09:53:52	0.017	0.013
5-Apr-2016	09:57:52	0.008	0.011
5-Apr-2016	10:01:52	0.008	0.009
5-Apr-2016	10:05:52	0.010	0.008
5-Apr-2016	10:09:52	0.006	0.008
5-Apr-2016	10:13:52	0.007	0.013
5-Apr-2016	10:17:52	0.026	0.014
5-Apr-2016	10:21:52	0.009	0.014
5-Apr-2016	10:25:52	0.006	0.006
5-Apr-2016	10:29:52	0.002	0.003
5-Apr-2016	10:33:52	0.002	0.005
5-Apr-2016	10:37:52	0.011	0.005
5-Apr-2016	10:41:52	0.002	0.006
5-Apr-2016	10:45:52	0.005	0.003
5-Apr-2016	10:49:52	0.003	0.005
5-Apr-2016	10:53:52	0.007	0.004
5-Apr-2016	10:57:52	0.002	0.003
5-Apr-2016	11:01:52	0.001	0.001
5-Apr-2016	11:05:52	0.001	0.003
5-Apr-2016	11:09:52	0.006	0.003
5-Apr-2016	11:13:52	0.002	0.003
5-Apr-2016	11:17:52	0.001	0.001
5-Apr-2016	11:21:52	0.000	0.001
5-Apr-2016	11:25:52	0.001	0.001
5-Apr-2016	11:29:52	0.003	0.002
5-Apr-2016	11:33:52	0.001	0.002
5-Apr-2016	11:37:52	0.002	0.002
5-Apr-2016	11:41:52	0.002	0.002
5-Apr-2016	11:45:52	0.002	0.002
5-Apr-2016	11:49:52	0.001	0.001
5-Apr-2016	11:53:52	0.001	0.005
5-Apr-2016	11:57:52	0.014	0.006
5-Apr-2016	12:01:52	0.003	0.007
5-Apr-2016	12:05:52	0.004	0.014
5-Apr-2016	12:09:52	0.034	0.019
5-Apr-2016	12:13:52	0.020	0.025
5-Apr-2016	12:17:52	0.022	0.017
5-Apr-2016	12:21:52	0.008	0.012
5-Apr-2016	12:25:52	0.007	0.006
5-Apr-2016	12:29:52	0.002	0.006
5-Apr-2016	12:33:52	0.008	0.005

DUST MONITORING

April 2016

shading indicates values over the threshold

Monitor: 3

Threshold: 0.15 (mg/m^3)

Date	Time	Value (mg/m^3)	TWA (mg/m^3)
5-Apr-2016	12:37:52	0.004	0.005
5-Apr-2016	12:41:52	0.004	0.004
5-Apr-2016	12:45:52	0.003	0.003
5-Apr-2016	12:49:52	0.001	0.002
5-Apr-2016	12:53:52	0.002	0.002
5-Apr-2016	12:57:52	0.003	0.003
5-Apr-2016	13:01:52	0.005	0.003
5-Apr-2016	13:05:52	0.002	0.003
5-Apr-2016	13:09:52	0.001	0.001
5-Apr-2016	13:13:52	0.001	0.003
5-Apr-2016	13:17:52	0.006	0.003
5-Apr-2016	13:21:52	0.003	0.003
5-Apr-2016	13:25:52	0.001	0.002
5-Apr-2016	13:29:52	0.002	0.003
5-Apr-2016	13:33:52	0.006	0.005
5-Apr-2016	13:37:52	0.007	0.004
5-Apr-2016	13:41:52	0.000	0.003
5-Apr-2016	13:45:52	0.001	0.001
5-Apr-2016	13:49:52	0.002	0.003
5-Apr-2016	13:53:52	0.006	0.003
5-Apr-2016	13:57:52	0.001	0.003
5-Apr-2016	14:01:52	0.001	0.001
5-Apr-2016	14:05:52	0.002	0.001
5-Apr-2016	14:09:52	0.001	0.001
5-Apr-2016	14:13:52	0.001	0.001
5-Apr-2016	14:17:52	0.002	0.008
5-Apr-2016	14:21:52	0.022	0.009
5-Apr-2016	14:25:52	0.002	0.008
5-Apr-2016	14:29:52	0.001	0.006
5-Apr-2016	14:33:52	0.014	0.008
5-Apr-2016	14:37:52	0.010	0.009
5-Apr-2016	14:41:52	0.004	0.006
5-Apr-2016	14:45:52	0.004	0.004
5-Apr-2016	14:49:52	0.004	0.005
5-Apr-2016	14:53:52	0.007	0.006
6-Apr-2016	08:25:37	0.020	0.019
6-Apr-2016	08:29:37	0.017	0.018
6-Apr-2016	08:33:37	0.018	0.018
6-Apr-2016	08:37:37	0.018	0.018
6-Apr-2016	08:41:37	0.019	0.019
6-Apr-2016	08:45:37	0.021	0.019

DUST MONITORING

April 2016

shading indicates values over the threshold

Monitor: 3

Threshold: 0.15 (mg/m^3)

Date	Time	Value (mg/m^3)	TWA (mg/m^3)
6-Apr-2016	08:49:37	0.018	0.019
6-Apr-2016	08:53:37	0.018	0.018
6-Apr-2016	08:57:37	0.018	0.019
6-Apr-2016	09:01:37	0.020	0.018
6-Apr-2016	09:05:37	0.017	0.018
6-Apr-2016	09:09:37	0.018	0.017
6-Apr-2016	09:13:37	0.017	0.018
6-Apr-2016	09:17:37	0.018	0.018
6-Apr-2016	09:21:37	0.019	0.018
6-Apr-2016	09:25:37	0.018	0.019
6-Apr-2016	09:29:37	0.020	0.019
6-Apr-2016	09:33:37	0.019	0.019
6-Apr-2016	09:37:37	0.018	0.019
6-Apr-2016	09:41:37	0.019	0.018
6-Apr-2016	09:45:37	0.018	0.018
6-Apr-2016	09:49:37	0.017	0.018
6-Apr-2016	09:53:37	0.020	0.019
6-Apr-2016	09:57:37	0.019	0.021
6-Apr-2016	10:01:37	0.023	0.021
6-Apr-2016	10:05:37	0.020	0.021
6-Apr-2016	10:09:37	0.021	0.020
6-Apr-2016	10:13:37	0.019	0.022
6-Apr-2016	10:17:37	0.027	0.025
6-Apr-2016	10:21:37	0.028	0.025
6-Apr-2016	10:25:37	0.021	0.022
6-Apr-2016	10:29:37	0.018	0.020
6-Apr-2016	10:33:37	0.021	0.020
6-Apr-2016	10:37:37	0.021	0.020
6-Apr-2016	10:41:37	0.018	0.019
6-Apr-2016	10:45:37	0.018	0.018
6-Apr-2016	10:49:37	0.019	0.020
6-Apr-2016	10:53:37	0.022	0.021
6-Apr-2016	10:57:37	0.022	0.022
6-Apr-2016	11:01:37	0.021	0.021
6-Apr-2016	11:05:37	0.020	0.021
6-Apr-2016	11:09:37	0.022	0.021
6-Apr-2016	11:13:37	0.020	0.021
6-Apr-2016	11:17:37	0.020	0.022
6-Apr-2016	11:21:37	0.025	0.026
6-Apr-2016	11:25:37	0.032	0.027
6-Apr-2016	11:29:37	0.024	0.025

DUST MONITORING

April 2016

shading indicates values over the threshold

Monitor: 3

Threshold: 0.15 (mg/m^3)

Date	Time	Value (mg/m^3)	TWA (mg/m^3)
6-Apr-2016	11:33:37	0.020	0.021
6-Apr-2016	11:37:37	0.020	0.020
6-Apr-2016	11:41:37	0.019	0.019
6-Apr-2016	11:45:37	0.018	0.018
6-Apr-2016	11:49:37	0.017	0.017
6-Apr-2016	11:53:37	0.017	0.017
6-Apr-2016	11:57:37	0.017	0.017
6-Apr-2016	12:01:37	0.018	0.017
6-Apr-2016	12:05:37	0.017	0.018
6-Apr-2016	12:09:37	0.018	0.018
6-Apr-2016	12:13:37	0.019	0.020
6-Apr-2016	12:17:37	0.022	0.021
6-Apr-2016	12:21:37	0.022	0.021
6-Apr-2016	12:25:37	0.018	0.019
6-Apr-2016	12:29:37	0.018	0.020
6-Apr-2016	12:33:37	0.024	0.022
6-Apr-2016	12:37:37	0.023	0.032
6-Apr-2016	12:41:37	0.049	0.037
6-Apr-2016	12:45:37	0.038	0.041
6-Apr-2016	12:49:37	0.036	0.041
6-Apr-2016	12:53:37	0.049	0.059
6-Apr-2016	12:57:37	0.093	0.058
6-Apr-2016	13:01:37	0.033	0.057
6-Apr-2016	13:05:37	0.044	0.042
6-Apr-2016	13:09:37	0.048	0.040
6-Apr-2016	13:13:37	0.029	0.032
6-Apr-2016	13:17:37	0.020	0.023
6-Apr-2016	13:21:37	0.020	0.020
6-Apr-2016	13:25:37	0.020	0.021
6-Apr-2016	13:29:37	0.022	0.021
6-Apr-2016	13:33:37	0.021	0.022
6-Apr-2016	13:37:37	0.022	0.028
6-Apr-2016	13:41:37	0.041	0.029
6-Apr-2016	13:45:37	0.023	0.031
6-Apr-2016	13:49:37	0.028	0.025
6-Apr-2016	13:53:37	0.024	0.025
6-Apr-2016	13:57:37	0.022	0.022
6-Apr-2016	14:01:37	0.021	0.022
6-Apr-2016	14:05:37	0.024	0.022
6-Apr-2016	14:09:37	0.022	0.025
6-Apr-2016	14:13:37	0.029	0.027

DUST MONITORING

April 2016

shading indicates values over the threshold

Monitor: 3

Threshold: 0.15 (mg/m^3)

Date	Time	Value (mg/m^3)	TWA (mg/m^3)
6-Apr-2016	14:17:37	0.031	0.030
6-Apr-2016	14:21:37	0.030	0.031
6-Apr-2016	14:25:37	0.031	0.027
6-Apr-2016	14:29:37	0.020	0.028
6-Apr-2016	14:33:37	0.034	0.026
6-Apr-2016	14:37:37	0.023	0.031
6-Apr-2016	14:41:37	0.036	0.032
6-Apr-2016	14:45:37	0.036	0.050
6-Apr-2016	14:49:37	0.077	0.046
6-Apr-2016	14:53:37	0.026	0.041
6-Apr-2016	14:57:37	0.019	0.021
6-Apr-2016	15:01:37	0.019	0.022
6-Apr-2016	15:05:37	0.028	0.023
6-Apr-2016	15:09:37	0.021	0.033
6-Apr-2016	15:13:37	0.049	0.032
6-Apr-2016	15:17:37	0.025	0.032
6-Apr-2016	15:21:37	0.022	0.023
6-Apr-2016	15:25:37	0.022	0.021
6-Apr-2016	15:29:37	0.020	0.022
6-Apr-2016	15:33:37	0.024	0.021
6-Apr-2016	15:37:37	0.019	0.022
6-Apr-2016	15:41:37	0.024	0.023
6-Apr-2016	15:45:37	0.025	0.035
6-Apr-2016	15:49:37	0.056	0.036
6-Apr-2016	15:53:37	0.026	0.041
8-Apr-2016	08:53:05	0.010	0.006
8-Apr-2016	08:57:05	0.002	0.005
8-Apr-2016	09:01:05	0.004	0.003
8-Apr-2016	09:05:05	0.002	0.003
8-Apr-2016	09:09:05	0.002	0.002
8-Apr-2016	09:13:05	0.002	0.002
8-Apr-2016	09:17:05	0.002	0.002
8-Apr-2016	09:21:05	0.002	0.003
8-Apr-2016	09:25:05	0.005	0.003
8-Apr-2016	09:29:05	0.003	0.008
8-Apr-2016	09:33:05	0.016	0.008
8-Apr-2016	09:37:05	0.005	0.008
8-Apr-2016	09:41:05	0.003	0.004
8-Apr-2016	09:45:05	0.003	0.003
8-Apr-2016	09:49:05	0.004	0.006
8-Apr-2016	09:53:05	0.010	0.007

DUST MONITORING

April 2016

shading indicates values over the threshold

Monitor: 3

Threshold: 0.15 (mg/m^3)

Date	Time	Value (mg/m^3)	TWA (mg/m^3)
8-Apr-2016	09:57:05	0.006	0.007
8-Apr-2016	10:01:05	0.004	0.004
8-Apr-2016	10:05:05	0.002	0.005
8-Apr-2016	10:09:05	0.010	0.007
8-Apr-2016	10:13:05	0.008	0.007
8-Apr-2016	10:17:05	0.003	0.005
8-Apr-2016	10:21:05	0.003	0.005
8-Apr-2016	10:25:05	0.008	0.009
8-Apr-2016	10:29:05	0.017	0.012
8-Apr-2016	10:33:05	0.011	0.011
8-Apr-2016	10:37:05	0.005	0.010
8-Apr-2016	10:41:05	0.014	0.011
8-Apr-2016	10:45:05	0.015	0.012
8-Apr-2016	10:49:05	0.007	0.014
8-Apr-2016	10:53:05	0.019	0.013
8-Apr-2016	10:57:05	0.012	0.016
8-Apr-2016	11:01:05	0.017	0.012
8-Apr-2016	11:05:05	0.007	0.012
8-Apr-2016	11:09:05	0.013	0.011
8-Apr-2016	11:13:05	0.012	0.012
8-Apr-2016	11:17:05	0.010	0.010
8-Apr-2016	11:21:05	0.008	0.008
8-Apr-2016	11:25:05	0.005	0.005
8-Apr-2016	11:29:05	0.003	0.005
8-Apr-2016	11:33:05	0.007	0.009
8-Apr-2016	11:37:05	0.016	0.010
8-Apr-2016	11:41:05	0.008	0.010
8-Apr-2016	11:45:05	0.007	0.007
8-Apr-2016	11:49:05	0.006	0.006
8-Apr-2016	11:53:05	0.006	0.005
8-Apr-2016	11:57:05	0.003	0.010
8-Apr-2016	12:01:05	0.021	0.013
8-Apr-2016	12:05:05	0.014	0.015
8-Apr-2016	12:09:05	0.009	0.013
8-Apr-2016	12:13:05	0.015	0.016
8-Apr-2016	12:17:05	0.023	0.019
11-Apr-2016	09:47:50	0.054	0.042
11-Apr-2016	09:51:50	0.030	0.038
11-Apr-2016	09:55:50	0.029	0.029
11-Apr-2016	09:59:50	0.029	0.032
11-Apr-2016	10:03:50	0.038	0.032

DUST MONITORING

April 2016

shading indicates values over the threshold

Monitor: 3

Threshold: 0.15 (mg/m^3)

Date	Time	Value (mg/m^3)	TWA (mg/m^3)
11-Apr-2016	10:07:50	0.029	0.031
11-Apr-2016	10:11:50	0.027	0.028
11-Apr-2016	10:15:50	0.027	0.027
11-Apr-2016	10:19:50	0.026	0.027
11-Apr-2016	10:23:50	0.028	0.026
11-Apr-2016	10:27:50	0.025	0.026
11-Apr-2016	10:31:50	0.025	0.027
11-Apr-2016	10:35:50	0.030	0.026
11-Apr-2016	10:39:50	0.022	0.025
11-Apr-2016	10:43:50	0.022	0.023
11-Apr-2016	10:47:50	0.024	0.023
11-Apr-2016	10:51:50	0.023	0.030
11-Apr-2016	10:55:50	0.044	0.030
11-Apr-2016	10:59:50	0.023	0.040
11-Apr-2016	11:03:50	0.053	0.033
11-Apr-2016	11:07:50	0.022	0.032
11-Apr-2016	11:11:50	0.020	0.021
11-Apr-2016	11:15:50	0.020	0.020
11-Apr-2016	11:19:50	0.020	0.020
11-Apr-2016	11:23:50	0.020	0.019
11-Apr-2016	11:27:50	0.018	0.019
11-Apr-2016	11:31:50	0.019	0.018
11-Apr-2016	11:35:50	0.018	0.021
11-Apr-2016	11:39:50	0.025	0.020
11-Apr-2016	11:43:50	0.018	0.021
11-Apr-2016	11:47:50	0.020	0.019
11-Apr-2016	11:51:50	0.018	0.019
11-Apr-2016	11:55:50	0.018	0.018
11-Apr-2016	11:59:50	0.018	0.018
11-Apr-2016	12:03:50	0.018	0.019
11-Apr-2016	12:07:50	0.020	0.024
11-Apr-2016	12:11:50	0.033	0.025
11-Apr-2016	12:15:50	0.023	0.025
11-Apr-2016	12:19:50	0.019	0.021
11-Apr-2016	12:23:50	0.021	0.020
11-Apr-2016	12:27:50	0.020	0.021
11-Apr-2016	12:31:50	0.023	0.022
11-Apr-2016	12:35:50	0.022	0.022
11-Apr-2016	12:39:50	0.021	0.021
11-Apr-2016	12:43:50	0.021	0.021
11-Apr-2016	12:47:50	0.022	0.021

DUST MONITORING

April 2016

shading indicates values over the threshold

Monitor: 3

Threshold: 0.15 (mg/m^3)

Date	Time	Value (mg/m^3)	TWA (mg/m^3)
11-Apr-2016	12:51:50	0.021	0.021
11-Apr-2016	12:55:50	0.021	0.023
11-Apr-2016	12:59:50	0.028	0.023
11-Apr-2016	13:03:50	0.021	0.024
11-Apr-2016	13:07:50	0.024	0.024
11-Apr-2016	13:11:50	0.027	0.033
11-Apr-2016	13:15:50	0.047	0.057
11-Apr-2016	13:19:50	0.097	0.101
11-Apr-2016	13:23:50	0.158	0.144
11-Apr-2016	13:27:50	0.176	0.157
11-Apr-2016	13:31:50	0.136	0.129
11-Apr-2016	13:35:50	0.076	0.090
11-Apr-2016	13:39:50	0.059	0.058
11-Apr-2016	13:43:50	0.040	0.050
13-Apr-2016	08:18:47	0.032	0.032
13-Apr-2016	08:22:47	0.032	0.032
13-Apr-2016	08:26:47	0.033	0.032
13-Apr-2016	08:30:47	0.032	0.032
13-Apr-2016	08:34:47	0.031	0.031
13-Apr-2016	08:38:47	0.031	0.031
13-Apr-2016	08:42:47	0.032	0.031
13-Apr-2016	08:46:47	0.030	0.031
13-Apr-2016	08:50:47	0.031	0.030
13-Apr-2016	08:54:47	0.030	0.030
13-Apr-2016	08:58:47	0.030	0.030
13-Apr-2016	09:02:47	0.029	0.029
13-Apr-2016	09:06:47	0.028	0.028
13-Apr-2016	09:10:47	0.028	0.028
13-Apr-2016	09:14:47	0.028	0.028
13-Apr-2016	09:18:47	0.027	0.027
13-Apr-2016	09:22:47	0.027	0.027
13-Apr-2016	09:26:47	0.027	0.027
13-Apr-2016	09:30:47	0.027	0.027
13-Apr-2016	09:34:47	0.027	0.027
13-Apr-2016	09:38:47	0.027	0.027
13-Apr-2016	09:42:47	0.027	0.027
13-Apr-2016	09:46:47	0.026	0.026
13-Apr-2016	09:50:47	0.026	0.026
13-Apr-2016	09:54:47	0.026	0.026
13-Apr-2016	09:58:47	0.026	0.026
13-Apr-2016	10:02:47	0.026	0.026

DUST MONITORING

April 2016

shading indicates values over the threshold

Monitor: 3

Threshold: 0.15 (mg/m^3)

Date	Time	Value (mg/m^3)	TWA (mg/m^3)
13-Apr-2016	10:06:47	0.025	0.025
13-Apr-2016	10:10:47	0.025	0.025
13-Apr-2016	10:14:47	0.025	0.025
13-Apr-2016	10:18:47	0.025	0.025
13-Apr-2016	10:22:47	0.024	0.024
13-Apr-2016	10:26:47	0.024	0.024
13-Apr-2016	10:30:47	0.024	0.024
13-Apr-2016	10:34:47	0.024	0.024
13-Apr-2016	10:38:47	0.024	0.024
13-Apr-2016	10:42:47	0.024	0.024
13-Apr-2016	10:46:47	0.023	0.023
13-Apr-2016	10:50:47	0.023	0.023
13-Apr-2016	10:54:47	0.023	0.023
13-Apr-2016	10:58:47	0.023	0.023
13-Apr-2016	11:02:47	0.022	0.022
13-Apr-2016	11:06:47	0.022	0.022
13-Apr-2016	11:10:47	0.023	0.023
13-Apr-2016	11:14:47	0.023	0.023
13-Apr-2016	11:18:47	0.023	0.023
13-Apr-2016	11:22:47	0.022	0.023
13-Apr-2016	11:26:47	0.023	0.023
13-Apr-2016	11:30:47	0.023	0.023
13-Apr-2016	11:34:47	0.022	0.022
13-Apr-2016	11:38:47	0.022	0.022
13-Apr-2016	11:42:47	0.021	0.021
13-Apr-2016	11:46:47	0.021	0.021
13-Apr-2016	11:50:47	0.021	0.021
13-Apr-2016	11:54:47	0.022	0.022
13-Apr-2016	11:58:47	0.022	0.022
13-Apr-2016	12:02:47	0.022	0.022
13-Apr-2016	12:06:47	0.021	0.022
13-Apr-2016	12:10:47	0.022	0.021
13-Apr-2016	12:14:47	0.021	0.021
13-Apr-2016	12:18:47	0.021	0.021
13-Apr-2016	12:22:47	0.022	0.021
13-Apr-2016	12:26:47	0.021	0.021
13-Apr-2016	12:30:47	0.021	0.021
13-Apr-2016	12:34:47	0.021	0.022
13-Apr-2016	12:38:47	0.023	0.022
13-Apr-2016	12:42:47	0.022	0.022
13-Apr-2016	12:46:47	0.022	0.022

DUST MONITORING

April 2016

shading indicates values over the threshold

Monitor: 3

Threshold: 0.15 (mg/m^3)

Date	Time	Value (mg/m^3)	TWA (mg/m^3)
13-Apr-2016	12:50:47	0.021	0.022
13-Apr-2016	12:54:47	0.022	0.021
13-Apr-2016	12:58:47	0.021	0.022
13-Apr-2016	13:02:47	0.023	0.022
13-Apr-2016	13:06:47	0.022	0.024
13-Apr-2016	13:10:47	0.026	0.024
13-Apr-2016	13:14:47	0.023	0.024
13-Apr-2016	13:18:47	0.024	0.023
13-Apr-2016	13:22:47	0.023	0.023
13-Apr-2016	13:26:47	0.022	0.023
13-Apr-2016	13:30:47	0.023	0.023
13-Apr-2016	13:34:47	0.023	0.023
13-Apr-2016	13:38:47	0.023	0.023
13-Apr-2016	13:42:47	0.023	0.023
19-Apr-2016	09:14:39	0.036	0.038
19-Apr-2016	09:18:39	0.039	0.036
19-Apr-2016	09:22:39	0.034	0.037
19-Apr-2016	09:26:39	0.038	0.038
19-Apr-2016	09:30:39	0.041	0.040
19-Apr-2016	09:34:39	0.041	0.039
19-Apr-2016	09:38:39	0.035	0.033
19-Apr-2016	09:42:39	0.024	0.027
19-Apr-2016	09:46:39	0.023	0.024
19-Apr-2016	09:50:39	0.024	0.024
19-Apr-2016	09:54:39	0.025	0.027
19-Apr-2016	09:58:39	0.033	0.029
19-Apr-2016	10:02:39	0.028	0.029
19-Apr-2016	10:06:39	0.026	0.026
19-Apr-2016	10:10:39	0.024	0.024
19-Apr-2016	10:14:39	0.022	0.023
19-Apr-2016	10:18:39	0.022	0.022
19-Apr-2016	10:22:39	0.022	0.022
19-Apr-2016	10:26:39	0.022	0.022
19-Apr-2016	10:30:39	0.022	0.023
19-Apr-2016	10:34:39	0.024	0.023
19-Apr-2016	10:38:39	0.024	0.025
19-Apr-2016	10:42:39	0.026	0.025
19-Apr-2016	10:46:39	0.024	0.025
19-Apr-2016	10:50:39	0.024	0.024
19-Apr-2016	10:54:39	0.025	0.025
19-Apr-2016	10:58:39	0.025	0.025

DUST MONITORING

April 2016

shading indicates values over the threshold

Monitor: 3

Threshold: 0.15 (mg/m^3)

Date	Time	Value (mg/m^3)	TWA (mg/m^3)
19-Apr-2016	11:02:39	0.024	0.025
19-Apr-2016	11:06:39	0.025	0.025
19-Apr-2016	11:10:39	0.025	0.025
19-Apr-2016	11:14:39	0.025	0.025
19-Apr-2016	11:18:39	0.026	0.026
19-Apr-2016	11:22:39	0.027	0.026
19-Apr-2016	11:26:39	0.025	0.026
19-Apr-2016	11:30:39	0.025	0.025
19-Apr-2016	11:34:39	0.026	0.025
19-Apr-2016	11:38:39	0.025	0.027
19-Apr-2016	11:42:39	0.029	0.027
19-Apr-2016	11:46:39	0.028	0.028
19-Apr-2016	11:50:39	0.026	0.026
19-Apr-2016	11:54:39	0.025	0.025
19-Apr-2016	11:58:39	0.024	0.024
19-Apr-2016	12:02:39	0.023	0.023
19-Apr-2016	12:06:39	0.022	0.024
19-Apr-2016	12:10:39	0.026	0.023
19-Apr-2016	12:14:39	0.022	0.023
19-Apr-2016	12:18:39	0.021	0.022
19-Apr-2016	12:22:39	0.022	0.022
19-Apr-2016	12:26:39	0.022	0.022
19-Apr-2016	12:30:39	0.021	0.022
19-Apr-2016	12:34:39	0.023	0.022
19-Apr-2016	12:38:39	0.022	0.023
19-Apr-2016	12:42:39	0.023	0.023
19-Apr-2016	12:46:39	0.025	0.023
19-Apr-2016	12:50:39	0.022	0.023
19-Apr-2016	12:54:39	0.023	0.023
19-Apr-2016	12:58:39	0.023	0.023
19-Apr-2016	13:02:39	0.023	0.023
19-Apr-2016	13:06:39	0.023	0.023
19-Apr-2016	13:10:39	0.024	0.023
19-Apr-2016	13:14:39	0.023	0.024
19-Apr-2016	13:18:39	0.024	0.024
19-Apr-2016	13:22:39	0.025	0.025
19-Apr-2016	13:26:39	0.025	0.025
19-Apr-2016	13:30:39	0.026	0.026
19-Apr-2016	13:34:39	0.028	0.027
19-Apr-2016	13:38:39	0.026	0.026
19-Apr-2016	13:42:39	0.025	0.026

DUST MONITORING

April 2016

shading indicates values over the threshold

Monitor: 3

Threshold: 0.15 (mg/m^3)

Date	Time	Value (mg/m^3)	TWA (mg/m^3)
19-Apr-2016	13:46:39	0.026	0.026
19-Apr-2016	13:50:39	0.028	0.027
19-Apr-2016	13:54:39	0.026	0.026
19-Apr-2016	13:58:39	0.025	0.025
19-Apr-2016	14:02:39	0.025	0.026
19-Apr-2016	14:06:39	0.028	0.028
19-Apr-2016	14:10:39	0.030	0.030
19-Apr-2016	14:14:39	0.032	0.030
19-Apr-2016	14:18:39	0.027	0.028
19-Apr-2016	14:22:39	0.025	0.026
19-Apr-2016	14:26:39	0.025	0.026
19-Apr-2016	14:30:39	0.028	0.027
19-Apr-2016	14:34:39	0.029	0.030
19-Apr-2016	14:38:39	0.032	0.031
20-Apr-2016	09:05:01	0.040	0.038
20-Apr-2016	09:09:01	0.036	0.035
20-Apr-2016	09:13:01	0.029	0.032
20-Apr-2016	09:17:01	0.030	0.029
20-Apr-2016	09:21:01	0.028	0.030
20-Apr-2016	09:25:01	0.032	0.032
20-Apr-2016	09:29:01	0.037	0.035
20-Apr-2016	09:33:01	0.036	0.037
20-Apr-2016	09:37:01	0.037	0.037
20-Apr-2016	09:41:01	0.038	0.038
20-Apr-2016	09:45:01	0.038	0.037
20-Apr-2016	09:49:01	0.036	0.036
20-Apr-2016	09:53:01	0.035	0.035
20-Apr-2016	09:57:01	0.035	0.036
20-Apr-2016	10:01:01	0.038	0.035
20-Apr-2016	10:05:01	0.032	0.035
20-Apr-2016	10:09:01	0.035	0.035
20-Apr-2016	10:13:01	0.037	0.037
20-Apr-2016	10:17:01	0.038	0.037
20-Apr-2016	10:21:01	0.036	0.036
20-Apr-2016	10:25:01	0.035	0.035
20-Apr-2016	10:29:01	0.034	0.034
20-Apr-2016	10:33:01	0.034	0.033
20-Apr-2016	10:37:01	0.032	0.032
20-Apr-2016	10:41:01	0.031	0.031
20-Apr-2016	10:45:01	0.031	0.031
20-Apr-2016	10:49:01	0.030	0.031

DUST MONITORING

April 2016

shading indicates values over the threshold

Monitor: 3

Threshold: 0.15 (mg/m^3)

Date	Time	Value (mg/m^3)	TWA (mg/m^3)
20-Apr-2016	10:53:01	0.032	0.031
20-Apr-2016	10:57:01	0.032	0.032
20-Apr-2016	11:01:01	0.031	0.032
20-Apr-2016	11:05:01	0.032	0.031
20-Apr-2016	11:09:01	0.031	0.032
20-Apr-2016	11:13:01	0.032	0.032
20-Apr-2016	11:17:01	0.032	0.032
20-Apr-2016	11:21:01	0.032	0.032
20-Apr-2016	11:25:01	0.032	0.032
20-Apr-2016	11:29:01	0.031	0.031
20-Apr-2016	11:33:01	0.031	0.031
20-Apr-2016	11:37:01	0.031	0.031
20-Apr-2016	11:41:01	0.031	0.031
20-Apr-2016	11:45:01	0.031	0.030
20-Apr-2016	11:49:01	0.029	0.030
20-Apr-2016	11:53:01	0.030	0.029
20-Apr-2016	11:57:01	0.029	0.030
20-Apr-2016	12:01:01	0.030	0.029
20-Apr-2016	12:05:01	0.028	0.028
20-Apr-2016	12:09:01	0.027	0.027
20-Apr-2016	12:13:01	0.027	0.027
20-Apr-2016	12:17:01	0.028	0.028
20-Apr-2016	12:21:01	0.030	0.029
20-Apr-2016	12:25:01	0.030	0.030
20-Apr-2016	12:29:01	0.029	0.029
20-Apr-2016	12:33:01	0.027	0.029
20-Apr-2016	12:37:01	0.031	0.028
20-Apr-2016	12:41:01	0.026	0.055
20-Apr-2016	12:45:01	0.109	0.054
20-Apr-2016	12:49:01	0.027	0.055
20-Apr-2016	12:53:01	0.029	0.029
20-Apr-2016	12:57:01	0.032	0.028
20-Apr-2016	13:01:01	0.024	0.027
20-Apr-2016	13:05:01	0.024	0.023
20-Apr-2016	13:09:01	0.021	0.023
20-Apr-2016	13:13:01	0.023	0.022
20-Apr-2016	13:17:01	0.022	0.022
20-Apr-2016	13:21:01	0.022	0.022
20-Apr-2016	13:25:01	0.023	0.022
20-Apr-2016	13:29:01	0.021	0.021
20-Apr-2016	13:33:01	0.020	0.020

DUST MONITORING

April 2016

shading indicates values over the threshold

Monitor: 3

Threshold: 0.15 (mg/m^3)

Date	Time	Value (mg/m^3)	TWA (mg/m^3)
20-Apr-2016	13:37:01	0.020	0.021
20-Apr-2016	13:41:01	0.022	0.021
20-Apr-2016	13:45:01	0.021	0.024
20-Apr-2016	13:49:01	0.028	0.028
20-Apr-2016	13:53:01	0.034	0.028
20-Apr-2016	13:57:01	0.021	0.028
20-Apr-2016	14:01:01	0.029	0.024
20-Apr-2016	14:05:01	0.022	0.024
20-Apr-2016	14:09:01	0.021	0.022
20-Apr-2016	14:13:01	0.023	0.022
20-Apr-2016	14:17:01	0.023	0.023
20-Apr-2016	14:21:01	0.023	0.024
20-Apr-2016	14:25:01	0.026	0.025
20-Apr-2016	14:29:01	0.025	0.025
20-Apr-2016	14:33:01	0.025	0.025
20-Apr-2016	14:37:01	0.025	0.025
20-Apr-2016	14:41:01	0.025	0.025
20-Apr-2016	14:45:01	0.026	0.026
20-Apr-2016	14:49:01	0.027	0.027
20-Apr-2016	14:53:01	0.027	0.025
20-Apr-2016	14:57:01	0.022	0.025
20-Apr-2016	15:01:01	0.025	0.025
20-Apr-2016	15:05:01	0.027	0.025
20-Apr-2016	15:09:01	0.024	0.025
20-Apr-2016	15:13:01	0.025	0.025
20-Apr-2016	15:17:01	0.027	0.026
20-Apr-2016	15:21:01	0.026	0.026
20-Apr-2016	15:25:01	0.026	0.027
20-Apr-2016	15:29:01	0.028	0.028
20-Apr-2016	15:33:01	0.031	0.030
20-Apr-2016	15:37:01	0.031	0.029
20-Apr-2016	15:41:01	0.026	0.027
20-Apr-2016	15:45:01	0.023	0.026
20-Apr-2016	15:49:01	0.029	0.028
20-Apr-2016	15:53:01	0.031	0.029
20-Apr-2016	15:57:01	0.027	0.026
20-Apr-2016	16:01:01	0.021	0.023
20-Apr-2016	16:05:01	0.021	0.021
20-Apr-2016	16:09:01	0.021	0.021
20-Apr-2016	16:13:01	0.021	0.021
20-Apr-2016	16:17:01	0.022	0.021

DUST MONITORING

April 2016

shading indicates values over the threshold

Monitor: 3

Threshold: 0.15 (mg/m^3)

Date	Time	Value (mg/m^3)	TWA (mg/m^3)
20-Apr-2016	16:21:01	0.021	0.021
20-Apr-2016	16:25:01	0.021	0.021
20-Apr-2016	16:29:01	0.022	0.022
27-Apr-2016	07:08:03	0.055	0.050
27-Apr-2016	07:12:03	0.045	0.046
27-Apr-2016	07:16:03	0.039	0.041
27-Apr-2016	07:20:03	0.040	0.044
27-Apr-2016	07:24:03	0.052	0.048
27-Apr-2016	07:28:03	0.051	0.052
27-Apr-2016	07:32:03	0.053	0.052
27-Apr-2016	07:36:03	0.051	0.051
27-Apr-2016	07:40:03	0.048	0.049
27-Apr-2016	07:44:03	0.048	0.047
27-Apr-2016	07:48:03	0.046	0.047
27-Apr-2016	07:52:03	0.046	0.045
27-Apr-2016	07:56:03	0.044	0.045
27-Apr-2016	08:00:03	0.045	0.045
27-Apr-2016	08:04:03	0.045	0.045
27-Apr-2016	08:08:03	0.044	0.045
27-Apr-2016	08:12:03	0.045	0.045
27-Apr-2016	08:16:03	0.045	0.045
27-Apr-2016	08:20:03	0.044	0.044
27-Apr-2016	08:24:03	0.044	0.044
27-Apr-2016	08:28:03	0.043	0.044
27-Apr-2016	08:32:03	0.045	0.044
27-Apr-2016	08:36:03	0.045	0.045
27-Apr-2016	08:40:03	0.045	0.045
27-Apr-2016	08:44:03	0.044	0.044
27-Apr-2016	08:48:03	0.044	0.044
27-Apr-2016	08:52:03	0.044	0.044
27-Apr-2016	08:56:03	0.044	0.044
27-Apr-2016	09:00:03	0.045	0.044
27-Apr-2016	09:04:03	0.043	0.044
27-Apr-2016	09:08:03	0.043	0.043
27-Apr-2016	09:12:03	0.044	0.044
27-Apr-2016	09:16:03	0.044	0.044
27-Apr-2016	09:20:03	0.044	0.044
27-Apr-2016	09:24:03	0.045	0.044
27-Apr-2016	09:28:03	0.044	0.044
27-Apr-2016	09:32:03	0.044	0.044
27-Apr-2016	09:36:03	0.045	0.045

DUST MONITORING

April 2016

shading indicates values over the threshold

Monitor: 3

Threshold: 0.15 (mg/m^3)

Date	Time	Value (mg/m^3)	TWA (mg/m^3)
27-Apr-2016	09:40:03	0.045	0.045
27-Apr-2016	09:44:03	0.044	0.044
27-Apr-2016	09:48:03	0.044	0.044
27-Apr-2016	09:52:03	0.045	0.044
27-Apr-2016	09:56:03	0.044	0.045
27-Apr-2016	10:00:03	0.045	0.044
27-Apr-2016	10:04:03	0.044	0.044
27-Apr-2016	10:08:03	0.044	0.044
27-Apr-2016	10:12:03	0.044	0.044
27-Apr-2016	10:16:03	0.044	0.045
27-Apr-2016	10:20:03	0.046	0.045
27-Apr-2016	10:24:03	0.046	0.046
27-Apr-2016	10:28:03	0.045	0.045
27-Apr-2016	10:32:03	0.045	0.046
27-Apr-2016	10:36:03	0.048	0.046
27-Apr-2016	10:40:03	0.045	0.046
27-Apr-2016	10:44:03	0.046	0.046
27-Apr-2016	10:48:03	0.046	0.046
27-Apr-2016	10:52:03	0.045	0.046
27-Apr-2016	10:56:03	0.046	0.046
27-Apr-2016	11:00:03	0.046	0.047
27-Apr-2016	11:04:03	0.048	0.047
27-Apr-2016	11:08:03	0.048	0.048
27-Apr-2016	11:12:03	0.048	0.049
27-Apr-2016	11:16:03	0.051	0.051
27-Apr-2016	11:20:03	0.053	0.051
27-Apr-2016	11:24:03	0.050	0.051
27-Apr-2016	11:28:03	0.050	0.049
27-Apr-2016	11:32:03	0.048	0.048
27-Apr-2016	11:36:03	0.047	0.047
27-Apr-2016	11:40:03	0.046	0.046
27-Apr-2016	11:44:03	0.046	0.045
27-Apr-2016	11:48:03	0.042	0.043
27-Apr-2016	11:52:03	0.042	0.042
27-Apr-2016	11:56:03	0.042	0.042
27-Apr-2016	12:00:03	0.041	0.041
27-Apr-2016	12:04:03	0.041	0.041
27-Apr-2016	12:08:03	0.040	0.040
27-Apr-2016	12:12:03	0.040	0.040
27-Apr-2016	12:16:03	0.039	0.041
27-Apr-2016	12:20:03	0.044	0.043

DUST MONITORING

April 2016

shading indicates values over the threshold

Monitor: 3

Threshold: 0.15 (mg/m^3)

Date	Time	Value (mg/m^3)	TWA (mg/m^3)
27-Apr-2016	12:24:03	0.046	0.045
27-Apr-2016	12:28:03	0.046	0.046
27-Apr-2016	12:32:03	0.047	0.047
27-Apr-2016	12:36:03	0.047	0.047
27-Apr-2016	12:40:03	0.047	0.047
27-Apr-2016	12:44:03	0.047	0.047
27-Apr-2016	12:48:03	0.047	0.047
27-Apr-2016	12:52:03	0.048	0.048
27-Apr-2016	12:56:03	0.048	0.048
27-Apr-2016	13:00:03	0.048	0.048
27-Apr-2016	13:04:03	0.047	0.048
27-Apr-2016	13:08:03	0.048	0.048
27-Apr-2016	13:12:03	0.048	0.049
27-Apr-2016	13:16:03	0.050	0.049
27-Apr-2016	13:20:03	0.049	0.050
27-Apr-2016	13:24:03	0.050	0.050
27-Apr-2016	13:28:03	0.050	0.050
27-Apr-2016	13:32:03	0.050	0.050
27-Apr-2016	13:36:03	0.051	0.051
27-Apr-2016	13:40:03	0.051	0.051
27-Apr-2016	13:44:03	0.050	0.050
27-Apr-2016	13:48:03	0.050	0.050
27-Apr-2016	13:52:03	0.051	0.051
27-Apr-2016	13:56:03	0.051	0.051
27-Apr-2016	14:00:03	0.051	0.050
27-Apr-2016	14:04:03	0.049	0.047
27-Apr-2016	14:08:03	0.042	0.044
27-Apr-2016	14:12:03	0.040	0.040
27-Apr-2016	14:16:03	0.039	0.039
27-Apr-2016	14:20:03	0.039	0.038
27-Apr-2016	14:24:03	0.036	0.037
27-Apr-2016	14:28:03	0.036	0.035
27-Apr-2016	14:32:03	0.033	0.034
27-Apr-2016	14:36:03	0.033	0.033
27-Apr-2016	14:40:03	0.034	0.034
27-Apr-2016	14:44:03	0.034	0.035
27-Apr-2016	14:48:03	0.037	0.036
27-Apr-2016	14:52:03	0.036	0.037
27-Apr-2016	14:56:03	0.039	0.038
27-Apr-2016	15:00:03	0.040	0.040
27-Apr-2016	15:04:03	0.040	0.040

DUST MONITORING

May 2016

shading indicates values over the threshold

Monitor: 1

Threshold: 0.15 (mg/m^3)

Date	Time	Value (mg/m^3)	TWA (mg/m^3)
5-May-2016	08:31:38	0.007	0.004
5-May-2016	08:35:38	0.001	0.003
5-May-2016	08:39:38	0.000	0.001
5-May-2016	08:43:38	0.003	0.001
5-May-2016	08:47:38	0.000	0.001
5-May-2016	08:51:38	0.000	0.000
5-May-2016	08:55:38	0.000	0.000
5-May-2016	08:59:38	0.000	0.000
5-May-2016	09:03:38	0.000	0.000
5-May-2016	09:07:38	0.000	0.000
5-May-2016	09:11:38	0.001	0.000
5-May-2016	09:15:38	0.000	0.000
5-May-2016	09:19:38	0.000	0.000
5-May-2016	09:23:38	0.000	0.000
5-May-2016	09:27:38	0.000	0.000
5-May-2016	09:31:38	0.000	0.000
5-May-2016	09:35:38	0.001	0.001
5-May-2016	09:39:38	0.001	0.001
5-May-2016	09:43:38	0.000	0.001
5-May-2016	09:47:38	0.001	0.001
5-May-2016	09:51:38	0.002	0.001
5-May-2016	09:55:38	0.001	0.001
5-May-2016	09:59:38	0.000	0.000
5-May-2016	10:03:38	0.000	0.000
5-May-2016	10:07:38	0.001	0.001
5-May-2016	10:11:38	0.001	0.001
5-May-2016	10:15:38	0.000	0.001
5-May-2016	10:19:38	0.001	0.001
5-May-2016	10:23:38	0.003	0.003
5-May-2016	10:27:38	0.004	0.003
5-May-2016	10:31:38	0.001	0.002
5-May-2016	10:35:38	0.000	0.001
5-May-2016	10:39:38	0.003	0.002
5-May-2016	10:43:38	0.003	0.003
5-May-2016	10:47:38	0.003	0.002
5-May-2016	10:51:38	0.000	0.002
5-May-2016	10:55:38	0.002	0.001
5-May-2016	10:59:38	0.001	0.003
5-May-2016	11:03:38	0.005	0.003
5-May-2016	11:07:38	0.003	0.007
5-May-2016	11:11:38	0.013	0.006

DUST MONITORING

May 2016

shading indicates values over the threshold

Monitor: 1

Threshold: 0.15 (mg/m^3)

Date	Time	Value (mg/m^3)	TWA (mg/m^3)
5-May-2016	11:15:38	0.002	0.005
5-May-2016	11:19:38	0.001	0.001
5-May-2016	11:23:38	0.001	0.001
5-May-2016	11:27:38	0.000	0.000
5-May-2016	11:31:38	0.000	0.001
5-May-2016	11:35:38	0.002	0.001
5-May-2016	11:39:38	0.000	0.001
5-May-2016	11:43:38	0.000	0.000
5-May-2016	11:47:38	0.001	0.001
5-May-2016	11:51:38	0.002	0.002
5-May-2016	11:55:38	0.002	0.001
5-May-2016	11:59:38	0.000	0.001
5-May-2016	12:03:38	0.001	0.001
5-May-2016	12:07:38	0.001	0.001
5-May-2016	12:11:38	0.001	0.002
5-May-2016	12:15:38	0.005	0.003
5-May-2016	12:19:38	0.002	0.003
5-May-2016	12:23:38	0.001	0.001
5-May-2016	12:27:38	0.001	0.001
5-May-2016	12:31:38	0.001	0.001
5-May-2016	12:35:38	0.002	0.001
5-May-2016	12:39:38	0.000	0.003
5-May-2016	12:43:38	0.006	0.002
5-May-2016	12:47:38	0.001	0.002
5-May-2016	12:51:38	0.000	0.001
5-May-2016	12:55:38	0.002	0.001
5-May-2016	12:59:38	0.000	0.001
5-May-2016	13:03:38	0.000	0.000
5-May-2016	13:07:38	0.000	0.000
5-May-2016	13:11:38	0.001	0.001
5-May-2016	13:15:38	0.001	0.002
5-May-2016	13:19:38	0.004	0.002
5-May-2016	13:23:38	0.002	0.004
5-May-2016	13:27:38	0.006	0.003
5-May-2016	13:31:38	0.001	0.003
5-May-2016	13:35:38	0.001	0.003
5-May-2016	13:39:38	0.008	0.003
5-May-2016	13:43:38	0.001	0.004
5-May-2016	13:47:38	0.004	0.002
5-May-2016	13:51:38	0.001	0.002
5-May-2016	13:55:38	0.001	0.002

DUST MONITORING

May 2016

shading indicates values over the threshold

Monitor: 1

Threshold: 0.15 (mg/m^3)

Date	Time	Value (mg/m^3)	TWA (mg/m^3)
5-May-2016	13:59:38	0.003	0.002
5-May-2016	14:03:38	0.002	0.003
5-May-2016	14:07:38	0.003	0.002
5-May-2016	14:11:38	0.002	0.003
5-May-2016	14:15:38	0.004	0.003
5-May-2016	14:19:38	0.004	0.005
5-May-2016	14:23:38	0.006	0.003
5-May-2016	14:27:38	0.000	0.004
5-May-2016	14:31:38	0.006	0.003
5-May-2016	14:35:38	0.004	0.004
5-May-2016	14:39:38	0.002	0.003
6-May-2016	09:40:43	0.000	0.000
6-May-2016	09:44:43	0.000	0.000
6-May-2016	09:48:43	0.001	0.001
6-May-2016	09:52:43	0.001	0.001
6-May-2016	09:56:43	0.000	0.000
6-May-2016	10:00:43	0.000	0.000
6-May-2016	10:04:43	0.000	0.000
6-May-2016	10:08:43	0.000	0.000
6-May-2016	10:12:43	0.000	0.000
6-May-2016	10:16:43	0.000	0.000
6-May-2016	10:20:43	0.000	0.000
6-May-2016	10:24:43	0.000	0.000
6-May-2016	10:28:43	0.000	0.000
6-May-2016	10:32:43	0.001	0.000
6-May-2016	10:36:43	0.000	0.000
6-May-2016	10:40:43	0.000	0.000
6-May-2016	10:44:43	0.000	0.001
6-May-2016	10:48:43	0.002	0.001
6-May-2016	10:52:43	0.000	0.001
6-May-2016	10:56:43	0.000	0.000
6-May-2016	11:00:43	0.000	0.000
6-May-2016	11:04:43	0.000	0.000
6-May-2016	11:08:43	0.000	0.000
6-May-2016	11:12:43	0.000	0.000
6-May-2016	11:16:43	0.001	0.000
6-May-2016	11:20:43	0.000	0.000
6-May-2016	11:24:43	0.000	0.000
6-May-2016	11:28:43	0.000	0.000
6-May-2016	11:32:43	0.000	0.000
6-May-2016	11:36:43	0.000	0.000

DUST MONITORING

May 2016

shading indicates values over the threshold

Monitor: 1

Threshold: 0.15 (mg/m^3)

Date	Time	Value (mg/m^3)	TWA (mg/m^3)
6-May-2016	11:40:43	0.000	0.000
6-May-2016	11:44:43	0.001	0.000
6-May-2016	11:48:43	0.000	0.000
6-May-2016	11:52:43	0.000	0.000
6-May-2016	11:56:43	0.000	0.000
6-May-2016	12:00:43	0.001	0.000
6-May-2016	12:04:43	0.000	0.001
6-May-2016	12:08:43	0.001	0.000
6-May-2016	12:12:43	0.000	0.000
6-May-2016	12:16:43	0.000	0.000
6-May-2016	12:20:43	0.000	0.001
6-May-2016	12:24:43	0.003	0.001
6-May-2016	12:28:43	0.000	0.001
6-May-2016	12:32:43	0.000	0.000
6-May-2016	12:36:43	0.001	0.003
6-May-2016	12:40:43	0.008	0.003
6-May-2016	12:44:43	0.000	0.003
6-May-2016	12:48:43	0.001	0.001
6-May-2016	12:52:43	0.001	0.001
6-May-2016	12:56:43	0.002	0.001
6-May-2016	13:00:43	0.000	0.001
6-May-2016	13:04:43	0.000	0.001
6-May-2016	13:08:43	0.002	0.001
6-May-2016	13:12:43	0.001	0.001
6-May-2016	13:16:43	0.001	0.001
6-May-2016	13:20:43	0.001	0.004
6-May-2016	13:24:43	0.010	0.005
6-May-2016	13:28:43	0.003	0.005
6-May-2016	13:32:43	0.001	0.001
6-May-2016	13:36:43	0.000	0.000
6-May-2016	13:40:43	0.000	0.000
6-May-2016	13:44:43	0.000	0.000
6-May-2016	13:48:43	0.000	0.000
6-May-2016	13:52:43	0.000	0.000
6-May-2016	13:56:43	0.000	0.000
6-May-2016	14:00:43	0.000	0.000
6-May-2016	14:04:43	0.000	0.000
6-May-2016	14:08:43	0.000	0.000
6-May-2016	14:12:43	0.001	0.000
6-May-2016	14:16:43	0.000	0.000
6-May-2016	14:20:43	0.000	0.000

DUST MONITORING

May 2016

shading indicates values over the threshold

Monitor: 1

Threshold: 0.15 (mg/m^3)

Date	Time	Value (mg/m^3)	TWA (mg/m^3)
6-May-2016	14:24:43	0.000	0.000
6-May-2016	14:28:43	0.000	0.000
6-May-2016	14:32:43	0.001	0.000
6-May-2016	14:36:43	0.000	0.001
6-May-2016	14:40:43	0.001	0.000
6-May-2016	14:44:43	0.000	0.000
6-May-2016	14:48:43	0.000	0.000
6-May-2016	14:52:43	0.000	0.000
6-May-2016	14:56:43	0.001	0.001
6-May-2016	15:00:43	0.001	0.001
6-May-2016	15:04:43	0.000	0.000
6-May-2016	15:08:43	0.000	0.000
6-May-2016	15:12:43	0.000	0.000
6-May-2016	15:16:43	0.000	0.000
6-May-2016	15:20:43	0.001	0.001
6-May-2016	15:24:43	0.001	0.002
6-May-2016	15:28:43	0.004	0.002
6-May-2016	15:32:43	0.000	0.002
6-May-2016	15:36:43	0.002	0.001
6-May-2016	15:40:43	0.000	0.001
6-May-2016	15:44:43	0.000	0.000
6-May-2016	15:48:43	0.000	0.000
6-May-2016	15:52:43	0.000	0.000
6-May-2016	15:56:43	0.000	0.000
6-May-2016	16:00:43	0.000	0.000
6-May-2016	16:04:43	0.000	0.000
6-May-2016	16:08:43	0.000	0.000
6-May-2016	16:12:43	0.000	0.000
6-May-2016	16:16:43	0.000	0.000
6-May-2016	16:20:43	0.000	0.000
6-May-2016	16:24:43	0.000	0.000
6-May-2016	16:28:43	0.000	0.000
6-May-2016	16:32:43	0.000	0.000
6-May-2016	16:36:43	0.000	0.000
6-May-2016	16:40:43	0.000	0.000
6-May-2016	16:44:43	0.000	0.000
6-May-2016	16:48:43	0.000	0.000
6-May-2016	16:52:43	0.000	0.000
6-May-2016	16:56:43	0.001	0.000
6-May-2016	17:00:43	0.000	0.000
6-May-2016	17:04:43	0.000	0.000

DUST MONITORING

May 2016

shading indicates values over the threshold

Monitor: 1

Threshold: 0.15 (mg/m^3)

Date	Time	Value (mg/m^3)	TWA (mg/m^3)
6-May-2016	17:08:43	0.000	0.000
6-May-2016	17:12:43	0.000	0.000
6-May-2016	17:16:43	0.000	0.000
6-May-2016	17:20:43	0.000	0.000
6-May-2016	17:24:43	0.000	0.000
6-May-2016	17:28:43	0.000	0.000
6-May-2016	17:32:43	0.000	0.000
6-May-2016	17:36:43	0.000	0.000
6-May-2016	17:40:43	0.000	0.000
6-May-2016	17:44:43	0.000	0.000
6-May-2016	17:48:43	0.000	0.000
6-May-2016	17:52:43	0.000	0.000
6-May-2016	17:56:43	0.000	0.000
6-May-2016	18:00:43	0.000	0.000
6-May-2016	18:04:43	0.000	0.000
6-May-2016	18:08:43	0.000	0.000
6-May-2016	18:12:43	0.000	0.000
6-May-2016	18:16:43	0.000	0.000
6-May-2016	18:20:43	0.000	0.000
6-May-2016	18:24:43	0.000	0.000
6-May-2016	18:28:43	0.000	0.000
6-May-2016	18:32:43	0.000	0.000
6-May-2016	18:36:43	0.000	0.000
6-May-2016	18:40:43	0.000	0.000
6-May-2016	18:44:43	0.000	0.000
6-May-2016	18:48:43	0.000	0.000
6-May-2016	18:52:43	0.000	0.000
6-May-2016	18:56:43	0.000	0.000
6-May-2016	19:00:43	0.000	0.000
6-May-2016	19:04:43	0.000	0.000
6-May-2016	19:08:43	0.000	0.000
6-May-2016	19:12:43	0.000	0.000
6-May-2016	19:16:43	0.000	0.000
6-May-2016	19:20:43	0.000	0.000
6-May-2016	19:24:43	0.001	0.001
6-May-2016	19:28:43	0.001	0.001
6-May-2016	19:32:43	0.000	0.001
6-May-2016	19:36:43	0.001	0.000
6-May-2016	19:40:43	0.000	0.001
6-May-2016	19:44:43	0.002	0.001
6-May-2016	19:48:43	0.000	0.001

DUST MONITORING

May 2016

shading indicates values over the threshold

Monitor: 1

Threshold: 0.15 (mg/m^3)

Date	Time	Value (mg/m^3)	TWA (mg/m^3)
6-May-2016	19:52:43	0.001	0.000
6-May-2016	19:56:43	0.000	0.001
6-May-2016	20:00:43	0.001	0.001
6-May-2016	20:04:43	0.001	0.001
10-May-2016	06:56:19	0.000	0.000
10-May-2016	07:00:19	0.000	0.004
10-May-2016	07:04:19	0.013	0.004
10-May-2016	07:08:19	0.000	0.004
10-May-2016	07:12:19	0.000	0.000
10-May-2016	07:16:19	0.000	0.000
10-May-2016	07:20:19	0.000	0.000
10-May-2016	07:24:19	0.000	0.000
10-May-2016	07:28:19	0.000	0.000
10-May-2016	07:32:19	0.000	0.000
10-May-2016	07:36:19	0.000	0.000
10-May-2016	07:40:19	0.000	0.000
10-May-2016	07:44:19	0.000	0.000
10-May-2016	07:48:19	0.000	0.000
10-May-2016	07:52:19	0.000	0.000
10-May-2016	07:56:19	0.000	0.000
10-May-2016	08:00:19	0.000	0.000
11-May-2016	10:20:30	0.002	0.001
11-May-2016	10:24:30	0.000	0.001
11-May-2016	10:28:30	0.000	0.000
11-May-2016	10:32:30	0.000	0.000
11-May-2016	10:36:30	0.000	0.000
11-May-2016	10:40:30	0.000	0.000
11-May-2016	10:44:30	0.000	0.000
11-May-2016	10:48:30	0.000	0.000
11-May-2016	10:52:30	0.000	0.000
11-May-2016	10:56:30	0.000	0.000
11-May-2016	11:00:30	0.000	0.000
11-May-2016	11:04:30	0.000	0.000
11-May-2016	11:08:30	0.000	0.000
11-May-2016	11:12:30	0.000	0.000
11-May-2016	11:16:30	0.000	0.000
11-May-2016	11:20:30	0.000	0.000
11-May-2016	11:24:30	0.000	0.000
11-May-2016	11:28:30	0.000	0.000
11-May-2016	11:32:30	0.000	0.000
11-May-2016	11:36:30	0.000	0.000

DUST MONITORING

May 2016

shading indicates values over the threshold

Monitor: 1

Threshold: 0.15 (mg/m^3)

Date	Time	Value (mg/m^3)	TWA (mg/m^3)
11-May-2016	11:40:30	0.000	0.000
11-May-2016	11:44:30	0.001	0.000
11-May-2016	11:48:30	0.000	0.000
11-May-2016	11:52:30	0.000	0.000
11-May-2016	11:56:30	0.000	0.000
11-May-2016	12:00:30	0.001	0.000
11-May-2016	12:04:30	0.000	0.000
11-May-2016	12:08:30	0.000	0.000
11-May-2016	12:12:30	0.000	0.000
11-May-2016	12:16:30	0.000	0.000
11-May-2016	12:20:30	0.001	0.000
11-May-2016	12:24:30	0.000	0.000
11-May-2016	12:28:30	0.000	0.000
11-May-2016	12:32:30	0.000	0.000
11-May-2016	12:36:30	0.000	0.000
11-May-2016	12:40:30	0.000	0.000
11-May-2016	12:44:30	0.000	0.000
11-May-2016	12:48:30	0.000	0.000
11-May-2016	12:52:30	0.000	0.000
11-May-2016	12:56:30	0.000	0.000
11-May-2016	13:00:30	0.000	0.000
11-May-2016	13:04:30	0.000	0.000
11-May-2016	13:08:30	0.000	0.000
11-May-2016	13:12:30	0.000	0.000
11-May-2016	13:16:30	0.000	0.000
11-May-2016	13:20:30	0.000	0.000
11-May-2016	13:24:30	0.000	0.000
11-May-2016	13:28:30	0.000	0.000
11-May-2016	13:32:30	0.000	0.000
11-May-2016	13:36:30	0.000	0.000
11-May-2016	13:40:30	0.000	0.000
11-May-2016	13:44:30	0.000	0.000
11-May-2016	13:48:30	0.000	0.000
11-May-2016	13:52:30	0.000	0.000
11-May-2016	13:56:30	0.001	0.000
11-May-2016	14:00:30	0.000	0.000
11-May-2016	14:04:30	0.000	0.000
11-May-2016	14:08:30	0.000	0.000
11-May-2016	14:12:30	0.000	0.000
11-May-2016	14:16:30	0.000	0.000
11-May-2016	14:20:30	0.000	0.000

DUST MONITORING

May 2016

shading indicates values over the threshold

Monitor: 1

Threshold: 0.15 (mg/m^3)

Date	Time	Value (mg/m^3)	TWA (mg/m^3)
11-May-2016	14:24:30	0.000	0.000
11-May-2016	14:28:30	0.000	0.000
11-May-2016	14:32:30	0.000	0.000
11-May-2016	14:36:30	0.000	0.000
11-May-2016	14:40:30	0.000	0.000
11-May-2016	14:44:30	0.000	0.000
11-May-2016	14:48:30	0.000	0.000
11-May-2016	14:52:30	0.000	0.000
11-May-2016	14:56:30	0.000	0.000
11-May-2016	15:00:30	0.000	0.000
11-May-2016	15:04:30	0.000	0.000
11-May-2016	15:08:30	0.000	0.000
11-May-2016	15:12:30	0.000	0.000
11-May-2016	15:16:30	0.000	0.000
11-May-2016	15:20:30	0.000	0.000
11-May-2016	15:24:30	0.000	0.000
11-May-2016	15:28:30	0.000	0.000
12-May-2016	08:05:10	0.001	0.001
12-May-2016	08:09:10	0.000	0.000
12-May-2016	08:13:10	0.000	0.000
12-May-2016	08:17:10	0.000	0.000
12-May-2016	08:21:10	0.000	0.000
12-May-2016	08:25:10	0.000	0.000
12-May-2016	08:29:10	0.000	0.002
12-May-2016	08:33:10	0.007	0.003
12-May-2016	08:37:10	0.001	0.003
12-May-2016	08:41:10	0.000	0.001
12-May-2016	08:45:10	0.001	0.001
12-May-2016	08:49:10	0.002	0.001
12-May-2016	08:53:10	0.000	0.001
12-May-2016	08:57:10	0.001	0.001
12-May-2016	09:01:10	0.001	0.001
12-May-2016	09:05:10	0.001	0.003
12-May-2016	09:09:10	0.006	0.010
12-May-2016	09:13:10	0.022	0.011
12-May-2016	09:17:10	0.006	0.009
12-May-2016	09:21:10	0.000	0.007
12-May-2016	09:25:10	0.016	0.006
12-May-2016	09:29:10	0.001	0.043
12-May-2016	09:33:10	0.113	0.113
12-May-2016	09:37:10	0.225	0.114

DUST MONITORING

May 2016

shading indicates values over the threshold

Monitor: 1

Threshold: 0.15 (mg/m^3)

Date	Time	Value (mg/m^3)	TWA (mg/m^3)
12-May-2016	09:41:10	0.003	0.076
12-May-2016	09:45:10	0.000	0.001
12-May-2016	09:49:10	0.001	0.001
12-May-2016	09:53:10	0.001	0.001
12-May-2016	09:57:10	0.000	0.000
12-May-2016	10:01:10	0.000	0.014
12-May-2016	10:05:10	0.043	0.014
12-May-2016	10:09:10	0.000	0.015
12-May-2016	10:13:10	0.001	0.050
12-May-2016	10:17:10	0.148	0.054
12-May-2016	10:21:10	0.012	0.055
12-May-2016	10:25:10	0.004	0.005
12-May-2016	10:29:10	0.000	0.001
12-May-2016	10:33:10	0.000	0.004
12-May-2016	10:37:10	0.013	0.004
12-May-2016	10:41:10	0.000	0.004
12-May-2016	10:45:10	0.000	0.000
12-May-2016	10:49:10	0.000	0.000
12-May-2016	10:53:10	0.000	0.053
12-May-2016	10:57:10	0.158	0.053
12-May-2016	11:01:10	0.001	0.053
12-May-2016	11:05:10	0.000	0.001
12-May-2016	11:09:10	0.002	0.001
12-May-2016	11:13:10	0.000	0.001
12-May-2016	11:17:10	0.000	0.000
12-May-2016	11:21:10	0.000	0.000
12-May-2016	11:25:10	0.000	0.000
12-May-2016	11:29:10	0.000	0.000
12-May-2016	11:33:10	0.001	0.000
12-May-2016	11:37:10	0.000	0.000
12-May-2016	11:41:10	0.000	0.000
12-May-2016	11:45:10	0.000	0.000
12-May-2016	11:49:10	0.000	0.000
12-May-2016	11:53:10	0.000	0.000
12-May-2016	11:57:10	0.000	0.000
12-May-2016	12:01:10	0.000	0.000

DUST MONITORING

May 2016

shading indicates values over the threshold

Monitor: 2

Threshold: 0.15 (mg/m^3)

Date	Time	Value (mg/m^3)	TWA (mg/m^3)
5-May-2016	08:37:21	0.039	0.039
5-May-2016	08:41:21	0.038	0.038
5-May-2016	08:45:21	0.038	0.038
5-May-2016	08:49:21	0.039	0.038
5-May-2016	08:53:21	0.037	0.038
5-May-2016	08:57:21	0.037	0.038
5-May-2016	09:01:21	0.039	0.038
5-May-2016	09:05:21	0.038	0.039
5-May-2016	09:09:21	0.040	0.039
5-May-2016	09:13:21	0.039	0.039
5-May-2016	09:17:21	0.038	0.039
5-May-2016	09:21:21	0.039	0.038
5-May-2016	09:25:21	0.038	0.038
5-May-2016	09:29:21	0.038	0.039
5-May-2016	09:33:21	0.040	0.039
5-May-2016	09:37:21	0.039	0.040
5-May-2016	09:41:21	0.042	0.041
5-May-2016	09:45:21	0.041	0.041
5-May-2016	09:49:21	0.040	0.041
5-May-2016	09:53:21	0.042	0.041
5-May-2016	09:57:21	0.041	0.042
5-May-2016	10:01:21	0.042	0.041
5-May-2016	10:05:21	0.039	0.041
5-May-2016	10:09:21	0.043	0.043
5-May-2016	10:13:21	0.046	0.043
5-May-2016	10:17:21	0.041	0.044
5-May-2016	10:21:21	0.046	0.045
5-May-2016	10:25:21	0.047	0.046
5-May-2016	10:29:21	0.045	0.046
5-May-2016	10:33:21	0.047	0.045
5-May-2016	10:37:21	0.042	0.045
5-May-2016	10:41:21	0.045	0.043
5-May-2016	10:45:21	0.043	0.042
5-May-2016	10:49:21	0.038	0.041
5-May-2016	10:53:21	0.041	0.041
5-May-2016	10:57:21	0.043	0.042
5-May-2016	11:01:21	0.042	0.041
5-May-2016	11:05:21	0.038	0.040
5-May-2016	11:09:21	0.040	0.039
5-May-2016	11:13:21	0.040	0.039
5-May-2016	11:17:21	0.037	0.039

DUST MONITORING

May 2016

shading indicates values over the threshold

Monitor: 2

Threshold: 0.15 (mg/m^3)

Date	Time	Value (mg/m^3)	TWA (mg/m^3)
5-May-2016	11:21:21	0.039	0.040
5-May-2016	11:25:21	0.044	0.042
5-May-2016	11:29:21	0.043	0.045
5-May-2016	11:33:21	0.047	0.044
5-May-2016	11:37:21	0.041	0.043
5-May-2016	11:41:21	0.042	0.042
5-May-2016	11:45:21	0.044	0.044
5-May-2016	11:49:21	0.047	0.045
5-May-2016	11:53:21	0.044	0.046
5-May-2016	11:57:21	0.048	0.047
5-May-2016	12:01:21	0.048	0.047
5-May-2016	12:05:21	0.046	0.049
5-May-2016	12:09:21	0.053	0.048
5-May-2016	12:13:21	0.045	0.048
5-May-2016	12:17:21	0.045	0.044
5-May-2016	12:21:21	0.043	0.045
5-May-2016	12:25:21	0.046	0.044
5-May-2016	12:29:21	0.043	0.046
5-May-2016	12:33:21	0.048	0.045
5-May-2016	12:37:21	0.044	0.046
5-May-2016	12:41:21	0.046	0.045
5-May-2016	12:45:21	0.046	0.048
5-May-2016	12:49:21	0.052	0.048
5-May-2016	12:53:21	0.045	0.051
5-May-2016	12:57:21	0.057	0.051
5-May-2016	13:01:21	0.050	0.052
5-May-2016	13:05:21	0.048	0.048
5-May-2016	13:09:21	0.047	0.047
5-May-2016	13:13:21	0.046	0.046
5-May-2016	13:17:21	0.046	0.046
5-May-2016	13:21:21	0.046	0.050
5-May-2016	13:25:21	0.058	0.051
5-May-2016	13:29:21	0.049	0.051
5-May-2016	13:33:21	0.046	0.046
5-May-2016	13:37:21	0.044	0.045
5-May-2016	13:41:21	0.046	0.046
5-May-2016	13:45:21	0.049	0.047
5-May-2016	13:49:21	0.046	0.047
5-May-2016	13:53:21	0.046	0.047
5-May-2016	13:57:21	0.048	0.046
5-May-2016	14:01:21	0.043	0.045

DUST MONITORING

May 2016

shading indicates values over the threshold

Monitor: 2

Threshold: 0.15 (mg/m^3)

Date	Time	Value (mg/m^3)	TWA (mg/m^3)
5-May-2016	14:05:21	0.045	0.044
5-May-2016	14:09:21	0.045	0.045
5-May-2016	14:13:21	0.046	0.045
5-May-2016	14:17:21	0.043	0.045
5-May-2016	14:21:21	0.046	0.048
5-May-2016	14:25:21	0.056	0.049
5-May-2016	14:29:21	0.046	0.048
5-May-2016	14:33:21	0.043	0.044
5-May-2016	14:37:21	0.044	0.044
5-May-2016	14:41:21	0.045	0.045
5-May-2016	14:45:21	0.045	0.045
6-May-2016	11:59:42	0.047	0.045
6-May-2016	12:03:42	0.042	0.053
6-May-2016	12:07:42	0.069	0.071
6-May-2016	12:11:42	0.101	0.087
6-May-2016	12:15:42	0.092	0.081
6-May-2016	12:19:42	0.051	0.065
6-May-2016	12:23:42	0.051	0.049
6-May-2016	12:27:42	0.045	0.048
6-May-2016	12:31:42	0.048	0.046
6-May-2016	12:35:42	0.045	0.048
6-May-2016	12:39:42	0.050	0.047
6-May-2016	12:43:42	0.047	0.048
6-May-2016	12:47:42	0.046	0.049
6-May-2016	12:51:42	0.053	0.050
6-May-2016	12:55:42	0.052	0.053
6-May-2016	12:59:42	0.055	0.051
6-May-2016	13:03:42	0.047	0.050
6-May-2016	13:07:42	0.048	0.050
6-May-2016	13:11:42	0.055	0.054
6-May-2016	13:15:42	0.060	0.057
6-May-2016	13:19:42	0.055	0.055
6-May-2016	13:23:42	0.050	0.054
6-May-2016	13:27:42	0.056	0.052
6-May-2016	13:31:42	0.051	0.056
6-May-2016	13:35:42	0.062	0.054
6-May-2016	13:39:42	0.050	0.056
10-May-2016	07:36:38	0.027	0.026
10-May-2016	07:40:38	0.024	0.025
10-May-2016	07:44:38	0.025	0.025
10-May-2016	07:48:38	0.026	0.025

DUST MONITORING

May 2016

shading indicates values over the threshold

Monitor: 2

Threshold: 0.15 (mg/m^3)

Date	Time	Value (mg/m^3)	TWA (mg/m^3)
10-May-2016	07:52:38	0.024	0.024
10-May-2016	07:56:38	0.023	0.024
10-May-2016	08:00:38	0.025	0.024
10-May-2016	08:04:38	0.025	0.024
10-May-2016	08:08:38	0.022	0.023
10-May-2016	08:12:38	0.023	0.024
10-May-2016	08:16:38	0.026	0.024
10-May-2016	08:20:38	0.024	0.025
10-May-2016	08:24:38	0.025	0.024
10-May-2016	08:28:38	0.023	0.024
10-May-2016	08:32:38	0.023	0.025
10-May-2016	08:36:38	0.028	0.025
10-May-2016	08:40:38	0.023	0.026
10-May-2016	08:44:38	0.026	0.024
10-May-2016	08:48:38	0.024	0.026
10-May-2016	08:52:38	0.028	0.025
10-May-2016	08:56:38	0.023	0.025
10-May-2016	09:00:38	0.024	0.024
10-May-2016	09:04:38	0.024	0.024
10-May-2016	09:08:38	0.025	0.025
10-May-2016	09:12:38	0.026	0.026
10-May-2016	09:16:38	0.027	0.028
10-May-2016	09:20:38	0.032	0.029
10-May-2016	09:24:38	0.028	0.030
10-May-2016	09:28:38	0.029	0.029
10-May-2016	09:32:38	0.029	0.030
10-May-2016	09:36:38	0.031	0.029
10-May-2016	09:40:38	0.027	0.031
10-May-2016	09:44:38	0.034	0.035
10-May-2016	09:48:38	0.043	0.038
10-May-2016	09:52:38	0.037	0.037
10-May-2016	09:56:38	0.031	0.031
10-May-2016	10:00:38	0.026	0.029
10-May-2016	10:04:38	0.029	0.030
10-May-2016	10:08:38	0.034	0.031
10-May-2016	10:12:38	0.031	0.031
10-May-2016	10:16:38	0.029	0.030
10-May-2016	10:20:38	0.031	0.032
10-May-2016	10:24:38	0.037	0.036
10-May-2016	10:28:38	0.041	0.036
10-May-2016	10:32:38	0.030	0.033

DUST MONITORING

May 2016

shading indicates values over the threshold

Monitor: 2

Threshold: 0.15 (mg/m^3)

Date	Time	Value (mg/m^3)	TWA (mg/m^3)
10-May-2016	10:36:38	0.029	0.029
10-May-2016	10:40:38	0.027	0.031
10-May-2016	10:44:38	0.036	0.029
10-May-2016	10:48:38	0.025	0.032
10-May-2016	10:52:38	0.036	0.030
10-May-2016	10:56:38	0.028	0.030
10-May-2016	11:00:38	0.027	0.028
10-May-2016	11:04:38	0.030	0.028
10-May-2016	11:08:38	0.028	0.028
10-May-2016	11:12:38	0.026	0.027
10-May-2016	11:16:38	0.026	0.027
10-May-2016	11:20:38	0.028	0.027
10-May-2016	11:24:38	0.028	0.028
10-May-2016	11:28:38	0.029	0.028
10-May-2016	11:32:38	0.028	0.030
10-May-2016	11:36:38	0.032	0.030
10-May-2016	11:40:38	0.029	0.029
10-May-2016	11:44:38	0.027	0.028
10-May-2016	11:48:38	0.029	0.029
10-May-2016	11:52:38	0.032	0.031
10-May-2016	11:56:38	0.031	0.031
10-May-2016	12:00:38	0.031	0.032
10-May-2016	12:04:38	0.033	0.033
10-May-2016	12:08:38	0.034	0.033
10-May-2016	12:12:38	0.032	0.032
10-May-2016	12:16:38	0.029	0.033
10-May-2016	12:20:38	0.037	0.032
10-May-2016	12:24:38	0.031	0.035
10-May-2016	12:28:38	0.037	0.033
10-May-2016	12:32:38	0.031	0.034
10-May-2016	12:36:38	0.035	0.034
10-May-2016	12:40:38	0.035	0.034
10-May-2016	12:44:38	0.033	0.034
10-May-2016	12:48:38	0.033	0.032
10-May-2016	12:52:38	0.030	0.035
10-May-2016	12:56:38	0.041	0.036
10-May-2016	13:00:38	0.036	0.037
10-May-2016	13:04:38	0.033	0.034
10-May-2016	13:08:38	0.033	0.035
10-May-2016	13:12:38	0.040	0.036
10-May-2016	13:16:38	0.034	0.036

DUST MONITORING

May 2016

shading indicates values over the threshold

Monitor: 2

Threshold: 0.15 (mg/m^3)

Date	Time	Value (mg/m^3)	TWA (mg/m^3)
10-May-2016	13:20:38	0.033	0.035
10-May-2016	13:24:38	0.038	0.036
10-May-2016	13:28:38	0.037	0.038
10-May-2016	13:32:38	0.039	0.037
10-May-2016	13:36:38	0.035	0.036
10-May-2016	13:40:38	0.035	0.036
10-May-2016	13:44:38	0.037	0.037
10-May-2016	13:48:38	0.038	0.037
10-May-2016	13:52:38	0.035	0.036
10-May-2016	13:56:38	0.035	0.034
10-May-2016	14:00:38	0.033	0.035
10-May-2016	14:04:38	0.037	0.035
10-May-2016	14:08:38	0.036	0.035
10-May-2016	14:12:38	0.033	0.035
10-May-2016	14:16:38	0.035	0.036
10-May-2016	14:20:38	0.041	0.039
10-May-2016	14:24:38	0.041	0.040
10-May-2016	14:28:38	0.039	0.040
10-May-2016	14:32:38	0.040	0.038
10-May-2016	14:36:38	0.036	0.037
10-May-2016	14:40:38	0.034	0.036
10-May-2016	14:44:38	0.039	0.036
10-May-2016	14:48:38	0.035	0.036
10-May-2016	14:52:38	0.035	0.035
10-May-2016	14:56:38	0.036	0.037
10-May-2016	15:00:38	0.041	0.040
10-May-2016	15:04:38	0.043	0.041
10-May-2016	15:08:38	0.039	0.039
10-May-2016	15:12:38	0.036	0.037
10-May-2016	15:16:38	0.036	0.036
11-May-2016	08:23:09	0.038	0.037
11-May-2016	08:27:09	0.036	0.037
11-May-2016	08:31:09	0.036	0.037
11-May-2016	08:35:09	0.038	0.037
11-May-2016	08:39:09	0.036	0.036
11-May-2016	08:43:09	0.035	0.036
11-May-2016	08:47:09	0.036	0.035
11-May-2016	08:51:09	0.035	0.037
11-May-2016	08:55:09	0.039	0.036
11-May-2016	08:59:09	0.035	0.036
11-May-2016	09:03:09	0.035	0.035

DUST MONITORING

May 2016

shading indicates values over the threshold

Monitor: 2

Threshold: 0.15 (mg/m^3)

Date	Time	Value (mg/m^3)	TWA (mg/m^3)
11-May-2016	09:07:09	0.035	0.035
11-May-2016	09:11:09	0.036	0.037
11-May-2016	09:15:09	0.041	0.037
11-May-2016	09:19:09	0.035	0.038
11-May-2016	09:23:09	0.037	0.036
11-May-2016	09:27:09	0.036	0.037
11-May-2016	09:31:09	0.038	0.037
11-May-2016	09:35:09	0.037	0.038
11-May-2016	09:39:09	0.040	0.038
11-May-2016	09:43:09	0.037	0.041
11-May-2016	09:47:09	0.045	0.040
11-May-2016	09:51:09	0.037	0.040
11-May-2016	09:55:09	0.039	0.038
11-May-2016	09:59:09	0.039	0.039
11-May-2016	10:03:09	0.039	0.039
11-May-2016	10:07:09	0.039	0.039
11-May-2016	10:11:09	0.038	0.038
11-May-2016	10:15:09	0.037	0.038
11-May-2016	10:19:09	0.038	0.037
11-May-2016	10:23:09	0.037	0.044
11-May-2016	10:27:09	0.058	0.045
11-May-2016	10:31:09	0.040	0.045
11-May-2016	10:35:09	0.038	0.039
11-May-2016	10:39:09	0.038	0.038
11-May-2016	10:43:09	0.039	0.040
11-May-2016	10:47:09	0.042	0.040
11-May-2016	10:51:09	0.039	0.040
11-May-2016	10:55:09	0.039	0.039
11-May-2016	10:59:09	0.038	0.038
11-May-2016	11:03:09	0.038	0.109
11-May-2016	11:07:09	0.251	0.109
11-May-2016	11:11:09	0.039	0.110
11-May-2016	11:15:09	0.039	0.042
11-May-2016	11:19:09	0.049	0.042
11-May-2016	11:23:09	0.038	0.042
11-May-2016	11:27:09	0.039	0.039
11-May-2016	11:31:09	0.040	0.039
11-May-2016	11:35:09	0.039	0.040
11-May-2016	11:39:09	0.040	0.040
11-May-2016	11:43:09	0.040	0.040
11-May-2016	11:47:09	0.039	0.041

DUST MONITORING

May 2016

shading indicates values over the threshold

Monitor: 2

Threshold: 0.15 (mg/m^3)

Date	Time	Value (mg/m^3)	TWA (mg/m^3)
11-May-2016	11:51:09	0.044	0.043
11-May-2016	11:55:09	0.046	0.050
11-May-2016	11:59:09	0.060	0.052
11-May-2016	12:03:09	0.051	0.060
11-May-2016	12:07:09	0.069	0.055
11-May-2016	12:11:09	0.044	0.052
11-May-2016	12:15:09	0.042	0.055
11-May-2016	12:19:09	0.079	0.079
11-May-2016	12:23:09	0.117	0.086
11-May-2016	12:27:09	0.062	0.075
11-May-2016	12:31:09	0.046	0.075
11-May-2016	12:35:09	0.118	0.069
11-May-2016	12:39:09	0.044	0.068
11-May-2016	12:43:09	0.042	0.043
11-May-2016	12:47:09	0.042	0.043
11-May-2016	12:51:09	0.045	0.043
11-May-2016	12:55:09	0.041	0.042
11-May-2016	12:59:09	0.040	0.041
11-May-2016	13:03:09	0.041	0.040
11-May-2016	13:07:09	0.038	0.040
11-May-2016	13:11:09	0.040	0.039
11-May-2016	13:15:09	0.040	0.045
11-May-2016	13:19:09	0.056	0.046
11-May-2016	13:23:09	0.042	0.046
11-May-2016	13:27:09	0.039	0.041
11-May-2016	13:31:09	0.043	0.041
11-May-2016	13:35:09	0.042	0.042
11-May-2016	13:39:09	0.041	0.041
11-May-2016	13:43:09	0.041	0.040
11-May-2016	13:47:09	0.039	0.040
11-May-2016	13:51:09	0.039	0.039
11-May-2016	13:55:09	0.040	0.041
11-May-2016	13:59:09	0.045	0.043
11-May-2016	14:03:09	0.043	0.043
11-May-2016	14:07:09	0.041	0.042
11-May-2016	14:11:09	0.042	0.041
11-May-2016	14:15:09	0.041	0.042
11-May-2016	14:19:09	0.042	0.042
11-May-2016	14:23:09	0.044	0.043
11-May-2016	14:27:09	0.043	0.043
11-May-2016	14:31:09	0.042	0.042

DUST MONITORING

May 2016

shading indicates values over the threshold

Monitor: **2**

Threshold: **0.15 (mg/m^3)**

Date	Time	Value (mg/m^3)	TWA (mg/m^3)
11-May-2016	14:35:09	0.042	0.042
11-May-2016	14:39:09	0.043	0.044
11-May-2016	14:43:09	0.046	0.045
11-May-2016	14:47:09	0.045	0.044
11-May-2016	14:51:09	0.042	0.043
11-May-2016	14:55:09	0.043	0.043
11-May-2016	14:59:09	0.044	0.044
11-May-2016	15:03:09	0.044	0.044
11-May-2016	15:07:09	0.045	0.045
11-May-2016	15:11:09	0.046	0.046
12-May-2016	07:17:14	0.085	0.089
12-May-2016	07:21:14	0.092	0.089
12-May-2016	07:25:14	0.090	0.091

DUST MONITORING

May 2016

shading indicates values over the threshold

Monitor: 3

Threshold: 0.15 (mg/m^3)

Date	Time	Value (mg/m^3)	TWA (mg/m^3)
5-May-2016	10:03:52	0.020	0.019
5-May-2016	10:07:52	0.018	0.019
5-May-2016	10:11:52	0.020	0.019
5-May-2016	10:15:52	0.018	0.019
5-May-2016	10:19:52	0.018	0.018
5-May-2016	10:23:52	0.017	0.018
5-May-2016	10:27:52	0.018	0.017
5-May-2016	10:31:52	0.017	0.017
5-May-2016	10:35:52	0.017	0.017
5-May-2016	10:39:52	0.017	0.017
5-May-2016	10:43:52	0.017	0.017
5-May-2016	10:47:52	0.017	0.017
5-May-2016	10:51:52	0.016	0.017
5-May-2016	10:55:52	0.017	0.017
5-May-2016	10:59:52	0.018	0.017
5-May-2016	11:03:52	0.016	0.017
5-May-2016	11:07:52	0.018	0.017
5-May-2016	11:11:52	0.017	0.018
5-May-2016	11:15:52	0.018	0.018
5-May-2016	11:19:52	0.018	0.018
5-May-2016	11:23:52	0.017	0.017
5-May-2016	11:27:52	0.017	0.018
5-May-2016	11:31:52	0.019	0.018
5-May-2016	11:35:52	0.017	0.018
5-May-2016	11:39:52	0.018	0.018
5-May-2016	11:43:52	0.018	0.018
5-May-2016	11:47:52	0.017	0.019
5-May-2016	11:51:52	0.021	0.019
5-May-2016	11:55:52	0.018	0.019
5-May-2016	11:59:52	0.018	0.020
5-May-2016	12:03:52	0.023	0.021
5-May-2016	12:07:52	0.023	0.022
5-May-2016	12:11:52	0.019	0.020
5-May-2016	12:15:52	0.018	0.019
5-May-2016	12:19:52	0.021	0.019
5-May-2016	12:23:52	0.019	0.020
5-May-2016	12:27:52	0.021	0.021
5-May-2016	12:31:52	0.022	0.021
5-May-2016	12:35:52	0.021	0.020
5-May-2016	12:39:52	0.018	0.019
5-May-2016	12:43:52	0.018	0.019

DUST MONITORING

May 2016

shading indicates values over the threshold

Monitor: 3

Threshold: 0.15 (mg/m^3)

Date	Time	Value (mg/m^3)	TWA (mg/m^3)
5-May-2016	12:47:52	0.020	0.019
5-May-2016	12:51:52	0.018	0.019
5-May-2016	12:55:52	0.019	0.018
5-May-2016	12:59:52	0.017	0.018
5-May-2016	13:03:52	0.018	0.018
5-May-2016	13:07:52	0.018	0.018
5-May-2016	13:11:52	0.018	0.019
5-May-2016	13:15:52	0.020	0.019
5-May-2016	13:19:52	0.020	0.020
5-May-2016	13:23:52	0.019	0.020
5-May-2016	13:27:52	0.020	0.020
5-May-2016	13:31:52	0.021	0.020
5-May-2016	13:35:52	0.019	0.019
5-May-2016	13:39:52	0.018	0.018
5-May-2016	13:43:52	0.018	0.018
5-May-2016	13:47:52	0.018	0.018
5-May-2016	13:51:52	0.018	0.018
5-May-2016	13:55:52	0.019	0.019
5-May-2016	13:59:52	0.020	0.020
5-May-2016	14:03:52	0.022	0.020
5-May-2016	14:07:52	0.019	0.020
5-May-2016	14:11:52	0.020	0.020
5-May-2016	14:15:52	0.020	0.019
5-May-2016	14:19:52	0.018	0.019
5-May-2016	14:23:52	0.019	0.019
5-May-2016	14:27:52	0.019	0.019
5-May-2016	14:31:52	0.019	0.019
5-May-2016	14:35:52	0.018	0.019
5-May-2016	14:39:52	0.020	0.019
5-May-2016	14:43:52	0.020	0.020
5-May-2016	14:47:52	0.021	0.021
6-May-2016	11:57:35	0.020	0.020
6-May-2016	12:01:35	0.019	0.027
6-May-2016	12:05:35	0.043	0.046
6-May-2016	12:09:35	0.077	0.063
6-May-2016	12:13:35	0.068	0.058
6-May-2016	12:17:35	0.028	0.040
6-May-2016	12:21:35	0.023	0.024
6-May-2016	12:25:35	0.020	0.022
6-May-2016	12:29:35	0.022	0.020
6-May-2016	12:33:35	0.018	0.022

DUST MONITORING

May 2016

shading indicates values over the threshold

Monitor: 3

Threshold: 0.15 (mg/m^3)

Date	Time	Value (mg/m^3)	TWA (mg/m^3)
6-May-2016	12:37:35	0.025	0.020
6-May-2016	12:41:35	0.018	0.020
6-May-2016	12:45:35	0.018	0.020
6-May-2016	12:49:35	0.024	0.022
6-May-2016	12:53:35	0.024	0.024
6-May-2016	12:57:35	0.024	0.023
6-May-2016	13:01:35	0.020	0.021
6-May-2016	13:05:35	0.018	0.020
6-May-2016	13:09:35	0.023	0.024
6-May-2016	13:13:35	0.031	0.027
6-May-2016	13:17:35	0.027	0.027
6-May-2016	13:21:35	0.022	0.025
6-May-2016	13:25:35	0.026	0.023
6-May-2016	13:29:35	0.022	0.026
6-May-2016	13:33:35	0.031	0.025
6-May-2016	13:37:35	0.022	0.025
6-May-2016	13:41:35	0.021	0.022
6-May-2016	13:45:35	0.024	0.027
6-May-2016	13:49:35	0.036	0.026
6-May-2016	13:53:35	0.019	0.025
6-May-2016	13:57:35	0.020	0.019
6-May-2016	14:01:35	0.019	0.020
6-May-2016	14:05:35	0.021	0.020
6-May-2016	14:09:35	0.021	0.021
6-May-2016	14:13:35	0.022	0.022
6-May-2016	14:17:35	0.023	0.022
6-May-2016	14:21:35	0.021	0.022
6-May-2016	14:25:35	0.022	0.021
6-May-2016	14:29:35	0.021	0.022
6-May-2016	14:33:35	0.023	0.023
6-May-2016	14:37:35	0.026	0.025
6-May-2016	14:41:35	0.026	0.024
6-May-2016	14:45:35	0.019	0.021
6-May-2016	14:49:35	0.019	0.019
6-May-2016	14:53:35	0.020	0.021
6-May-2016	14:57:35	0.023	0.024
6-May-2016	15:01:35	0.029	0.025
6-May-2016	15:05:35	0.024	0.023
6-May-2016	15:09:35	0.016	0.020
6-May-2016	15:13:35	0.020	0.019
6-May-2016	15:17:35	0.020	0.020

DUST MONITORING

May 2016

shading indicates values over the threshold

Monitor: 3

Threshold: 0.15 (mg/m^3)

Date	Time	Value (mg/m^3)	TWA (mg/m^3)
6-May-2016	15:21:35	0.020	0.023
6-May-2016	15:25:35	0.030	0.023
6-May-2016	15:29:35	0.018	0.022
6-May-2016	15:33:35	0.017	0.046
6-May-2016	15:37:35	0.103	0.049
6-May-2016	15:41:35	0.028	0.051
6-May-2016	15:45:35	0.022	0.022
6-May-2016	15:49:35	0.017	0.019
6-May-2016	15:53:35	0.018	0.018
6-May-2016	15:57:35	0.018	0.019
6-May-2016	16:01:35	0.021	0.020
6-May-2016	16:05:35	0.020	0.020
6-May-2016	16:09:35	0.019	0.023
6-May-2016	16:13:35	0.030	0.028
6-May-2016	16:17:35	0.036	0.028
6-May-2016	16:21:35	0.019	0.026
6-May-2016	16:25:35	0.022	0.021
6-May-2016	16:29:35	0.021	0.021
6-May-2016	16:33:35	0.021	0.020
6-May-2016	16:37:35	0.019	0.024
6-May-2016	16:41:35	0.031	0.025
6-May-2016	16:45:35	0.024	0.030
6-May-2016	16:49:35	0.034	0.028
6-May-2016	16:53:35	0.027	0.028
6-May-2016	16:57:35	0.022	0.023
6-May-2016	17:01:35	0.020	0.020
6-May-2016	17:05:35	0.019	0.020
6-May-2016	17:09:35	0.020	0.019
6-May-2016	17:13:35	0.019	0.019
6-May-2016	17:17:35	0.018	0.019
6-May-2016	17:21:35	0.019	0.019
6-May-2016	17:25:35	0.020	0.019
6-May-2016	17:29:35	0.019	0.023
6-May-2016	17:33:35	0.029	0.023
6-May-2016	17:37:35	0.022	0.024
6-May-2016	17:41:35	0.020	0.044
6-May-2016	17:45:35	0.091	0.044
6-May-2016	17:49:35	0.020	0.045
6-May-2016	17:53:35	0.025	0.022
6-May-2016	17:57:35	0.020	0.022
6-May-2016	18:01:35	0.021	0.021

DUST MONITORING

May 2016

shading indicates values over the threshold

Monitor: 3

Threshold: 0.15 (mg/m^3)

Date	Time	Value (mg/m^3)	TWA (mg/m^3)
6-May-2016	18:05:35	0.021	0.021
6-May-2016	18:09:35	0.020	0.020
6-May-2016	18:13:35	0.020	0.020
6-May-2016	18:17:35	0.019	0.020
6-May-2016	18:21:35	0.020	0.019
6-May-2016	18:25:35	0.019	0.019
6-May-2016	18:29:35	0.019	0.019
6-May-2016	18:33:35	0.019	0.019
6-May-2016	18:37:35	0.018	0.018
6-May-2016	18:41:35	0.018	0.019
6-May-2016	18:45:35	0.020	0.019
6-May-2016	18:49:35	0.019	0.020
6-May-2016	18:53:35	0.020	0.020
6-May-2016	18:57:35	0.021	0.022
6-May-2016	19:01:35	0.025	0.024
6-May-2016	19:05:35	0.027	0.025
6-May-2016	19:09:35	0.024	0.025
6-May-2016	19:13:35	0.024	0.024
6-May-2016	19:17:35	0.023	0.024
6-May-2016	19:21:35	0.024	0.025
6-May-2016	19:25:35	0.029	0.027
6-May-2016	19:29:35	0.029	0.028
6-May-2016	19:33:35	0.027	0.028
6-May-2016	19:37:35	0.028	0.026
6-May-2016	19:41:35	0.024	0.025
6-May-2016	19:45:35	0.022	0.028
6-May-2016	19:49:35	0.037	0.028
6-May-2016	19:53:35	0.026	0.030
6-May-2016	19:57:35	0.027	0.026
6-May-2016	20:01:35	0.025	0.025
6-May-2016	20:05:35	0.024	0.024
6-May-2016	20:09:35	0.024	0.024
6-May-2016	20:13:35	0.023	0.024
6-May-2016	20:17:35	0.024	0.023
6-May-2016	20:21:35	0.023	0.023
6-May-2016	20:25:35	0.022	0.022
6-May-2016	20:29:35	0.022	0.022
6-May-2016	20:33:35	0.022	0.022
6-May-2016	20:37:35	0.022	0.023
6-May-2016	20:41:35	0.024	0.026
6-May-2016	20:45:35	0.033	0.030

DUST MONITORING

May 2016

shading indicates values over the threshold

Monitor: 3

Threshold: 0.15 (mg/m^3)

Date	Time	Value (mg/m^3)	TWA (mg/m^3)
6-May-2016	20:49:35	0.033	0.030
6-May-2016	20:53:35	0.023	0.026
6-May-2016	20:57:35	0.023	0.023
6-May-2016	21:01:35	0.023	0.024
6-May-2016	21:05:35	0.025	0.024
10-May-2016	07:36:10	0.024	0.024
10-May-2016	07:40:10	0.023	0.024
10-May-2016	07:44:10	0.025	0.024
10-May-2016	07:48:10	0.024	0.024
10-May-2016	07:52:10	0.023	0.023
10-May-2016	07:56:10	0.023	0.023
10-May-2016	08:00:10	0.023	0.023
10-May-2016	08:04:10	0.023	0.023
10-May-2016	08:08:10	0.022	0.022
10-May-2016	08:12:10	0.022	0.022
10-May-2016	08:16:10	0.023	0.022
10-May-2016	08:20:10	0.021	0.024
10-May-2016	08:24:10	0.027	0.024
10-May-2016	08:28:10	0.023	0.024
10-May-2016	08:32:10	0.021	0.021
10-May-2016	08:36:10	0.020	0.021
10-May-2016	08:40:10	0.021	0.021
10-May-2016	08:44:10	0.022	0.021
10-May-2016	08:48:10	0.020	0.021
10-May-2016	08:52:10	0.021	0.020
10-May-2016	08:56:10	0.020	0.021
10-May-2016	09:00:10	0.021	0.021
10-May-2016	09:04:10	0.021	0.021
10-May-2016	09:08:10	0.022	0.021
10-May-2016	09:12:10	0.020	0.022
10-May-2016	09:16:10	0.023	0.021
10-May-2016	09:20:10	0.021	0.029
10-May-2016	09:24:10	0.044	0.031
10-May-2016	09:28:10	0.028	0.034
10-May-2016	09:32:10	0.031	0.029
10-May-2016	09:36:10	0.027	0.029
10-May-2016	09:40:10	0.029	0.029
10-May-2016	09:44:10	0.030	0.039
10-May-2016	09:48:10	0.058	0.045
10-May-2016	09:52:10	0.047	0.042
10-May-2016	09:56:10	0.022	0.032

DUST MONITORING

May 2016

shading indicates values over the threshold

Monitor: 3

Threshold: 0.15 (mg/m^3)

Date	Time	Value (mg/m^3)	TWA (mg/m^3)
10-May-2016	10:00:10	0.028	0.026
10-May-2016	10:04:10	0.028	0.027
10-May-2016	10:08:10	0.025	0.030
10-May-2016	10:12:10	0.036	0.039
10-May-2016	10:16:10	0.057	0.056
10-May-2016	10:20:10	0.075	0.054
10-May-2016	10:24:10	0.029	0.042
10-May-2016	10:28:10	0.022	0.033
10-May-2016	10:32:10	0.048	0.036
10-May-2016	10:36:10	0.037	0.040
10-May-2016	10:40:10	0.036	0.038
10-May-2016	10:44:10	0.041	0.034
10-May-2016	10:48:10	0.024	0.030
10-May-2016	10:52:10	0.024	0.023
10-May-2016	10:56:10	0.022	0.023
10-May-2016	11:00:10	0.022	0.022
10-May-2016	11:04:10	0.023	0.022
10-May-2016	11:08:10	0.022	0.022
10-May-2016	11:12:10	0.021	0.021
10-May-2016	11:16:10	0.021	0.022
10-May-2016	11:20:10	0.023	0.022
10-May-2016	11:24:10	0.023	0.023
10-May-2016	11:28:10	0.024	0.024
10-May-2016	11:32:10	0.024	0.026
10-May-2016	11:36:10	0.030	0.025
10-May-2016	11:40:10	0.022	0.025
10-May-2016	11:44:10	0.024	0.024
10-May-2016	11:48:10	0.025	0.027
10-May-2016	11:52:10	0.032	0.029
10-May-2016	11:56:10	0.029	0.028
10-May-2016	12:00:10	0.024	0.029
10-May-2016	12:04:10	0.034	0.029
10-May-2016	12:08:10	0.028	0.028
10-May-2016	12:12:10	0.022	0.025
10-May-2016	12:16:10	0.024	0.029
10-May-2016	12:20:10	0.041	0.031
10-May-2016	12:24:10	0.029	0.034
10-May-2016	12:28:10	0.033	0.032
10-May-2016	12:32:10	0.035	0.031
10-May-2016	12:36:10	0.024	0.028
10-May-2016	12:40:10	0.025	0.026

DUST MONITORING

May 2016

shading indicates values over the threshold

Monitor: 3

Threshold: 0.15 (mg/m^3)

Date	Time	Value (mg/m^3)	TWA (mg/m^3)
10-May-2016	12:44:10	0.030	0.058
10-May-2016	12:48:10	0.120	0.059
10-May-2016	12:52:10	0.028	0.065
10-May-2016	12:56:10	0.047	0.037
10-May-2016	13:00:10	0.036	0.038
10-May-2016	13:04:10	0.030	0.034
10-May-2016	13:08:10	0.035	0.033
10-May-2016	13:12:10	0.033	0.033
10-May-2016	13:16:10	0.031	0.033
10-May-2016	13:20:10	0.036	0.038
10-May-2016	13:24:10	0.046	0.040
10-May-2016	13:28:10	0.037	0.037
10-May-2016	13:32:10	0.029	0.032
10-May-2016	13:36:10	0.030	0.034
10-May-2016	13:40:10	0.043	0.035
10-May-2016	13:44:10	0.033	0.035
10-May-2016	13:48:10	0.028	0.029
10-May-2016	13:52:10	0.027	0.028
10-May-2016	13:56:10	0.028	0.028
10-May-2016	14:00:10	0.029	0.029
10-May-2016	14:04:10	0.030	0.031
10-May-2016	14:08:10	0.034	0.032

DUST MONITORING

June 2016

shading indicates values over the threshold

Monitor: 1

Threshold: 0.15 (mg/m^3)

Date	Time	Value (mg/m^3)	TWA (mg/m^3)
9-Jun-2016	07:23:37	0.027	0.022
9-Jun-2016	07:27:37	0.016	0.018
9-Jun-2016	07:31:37	0.011	0.012
9-Jun-2016	07:35:37	0.009	0.010
9-Jun-2016	07:39:37	0.011	0.009
9-Jun-2016	07:43:37	0.006	0.007
9-Jun-2016	07:47:37	0.003	0.005
9-Jun-2016	07:51:37	0.007	0.004
9-Jun-2016	07:55:37	0.002	0.004
9-Jun-2016	07:59:37	0.003	0.007
9-Jun-2016	08:03:37	0.017	0.007
9-Jun-2016	08:07:37	0.002	0.007
9-Jun-2016	08:11:37	0.001	0.001
9-Jun-2016	08:15:37	0.001	0.002
9-Jun-2016	08:19:37	0.004	0.002
9-Jun-2016	08:23:37	0.002	0.003
9-Jun-2016	08:27:37	0.003	0.003
9-Jun-2016	08:31:37	0.004	0.003
9-Jun-2016	08:35:37	0.001	0.002
9-Jun-2016	08:39:37	0.002	0.002
9-Jun-2016	08:43:37	0.004	0.003
9-Jun-2016	08:47:37	0.002	0.003
9-Jun-2016	08:51:37	0.003	0.003
9-Jun-2016	08:55:37	0.004	0.003
9-Jun-2016	08:59:37	0.001	0.002
9-Jun-2016	09:03:37	0.001	0.001
9-Jun-2016	09:07:37	0.000	0.000
9-Jun-2016	09:11:37	0.000	0.000
9-Jun-2016	09:15:37	0.001	0.000
9-Jun-2016	09:19:37	0.000	0.001
9-Jun-2016	09:23:37	0.001	0.000
9-Jun-2016	09:27:37	0.000	0.000
9-Jun-2016	09:31:37	0.000	0.000
9-Jun-2016	09:35:37	0.000	0.002
9-Jun-2016	09:39:37	0.006	0.002
9-Jun-2016	09:43:37	0.001	0.009
9-Jun-2016	09:47:37	0.020	0.007
9-Jun-2016	09:51:37	0.001	0.007
9-Jun-2016	09:55:37	0.000	0.000
9-Jun-2016	09:59:37	0.000	0.000
9-Jun-2016	10:03:37	0.000	0.000

DUST MONITORING

June 2016

shading indicates values over the threshold

Monitor: 1

Threshold: 0.15 (mg/m^3)

Date	Time	Value (mg/m^3)	TWA (mg/m^3)
9-Jun-2016	10:07:37	0.000	0.000
9-Jun-2016	10:11:37	0.000	0.000
9-Jun-2016	10:15:37	0.000	0.000
9-Jun-2016	10:19:37	0.000	0.000
9-Jun-2016	10:23:37	0.000	0.001
9-Jun-2016	10:27:37	0.002	0.001
9-Jun-2016	10:31:37	0.000	0.005
9-Jun-2016	10:35:37	0.012	0.009
9-Jun-2016	10:39:37	0.015	0.009
9-Jun-2016	10:43:37	0.000	0.005
9-Jun-2016	10:47:37	0.000	0.000
9-Jun-2016	10:51:37	0.000	0.002
9-Jun-2016	10:55:37	0.005	0.009
9-Jun-2016	10:59:37	0.022	0.010
9-Jun-2016	11:03:37	0.002	0.008
9-Jun-2016	11:07:37	0.000	0.001
9-Jun-2016	11:11:37	0.000	0.000
9-Jun-2016	11:15:37	0.000	0.000
9-Jun-2016	11:19:37	0.000	0.000
9-Jun-2016	11:23:37	0.001	0.000
9-Jun-2016	11:27:37	0.000	0.000
9-Jun-2016	11:31:37	0.000	0.000
9-Jun-2016	11:35:37	0.000	0.004
9-Jun-2016	11:39:37	0.011	0.006
9-Jun-2016	11:43:37	0.007	0.006
9-Jun-2016	11:47:37	0.001	0.003
9-Jun-2016	11:51:37	0.002	0.002
9-Jun-2016	11:55:37	0.002	0.003
9-Jun-2016	11:59:37	0.005	0.007
9-Jun-2016	12:03:37	0.014	0.007
9-Jun-2016	12:07:37	0.002	0.006
9-Jun-2016	12:11:37	0.001	0.002
9-Jun-2016	12:15:37	0.002	0.001
9-Jun-2016	12:19:37	0.001	0.002
9-Jun-2016	12:23:37	0.002	0.001
9-Jun-2016	12:27:37	0.001	0.001
9-Jun-2016	12:31:37	0.000	0.001
9-Jun-2016	12:35:37	0.002	0.001
9-Jun-2016	12:39:37	0.001	0.001
9-Jun-2016	12:43:37	0.001	0.001
9-Jun-2016	12:47:37	0.001	0.001

DUST MONITORING

June 2016

shading indicates values over the threshold

Monitor: 1

Threshold: 0.15 (mg/m^3)

Date	Time	Value (mg/m^3)	TWA (mg/m^3)
9-Jun-2016	12:51:37	0.001	0.001
9-Jun-2016	12:55:37	0.000	0.000
9-Jun-2016	12:59:37	0.000	0.000
9-Jun-2016	13:03:37	0.000	0.000
9-Jun-2016	13:07:37	0.001	0.000
9-Jun-2016	13:11:37	0.000	0.000
9-Jun-2016	13:15:37	0.000	0.000
9-Jun-2016	13:19:37	0.001	0.001
9-Jun-2016	13:23:37	0.001	0.001
9-Jun-2016	13:27:37	0.001	0.001
9-Jun-2016	13:31:37	0.002	0.001
9-Jun-2016	13:35:37	0.000	0.002
9-Jun-2016	13:39:37	0.005	0.002
9-Jun-2016	13:43:37	0.000	0.002
9-Jun-2016	13:47:37	0.000	0.000
9-Jun-2016	13:51:37	0.000	0.001
9-Jun-2016	13:55:37	0.002	0.001
9-Jun-2016	13:59:37	0.000	0.001
9-Jun-2016	14:03:37	0.000	0.000
9-Jun-2016	14:07:37	0.000	0.000
9-Jun-2016	14:11:37	0.000	0.003
9-Jun-2016	14:15:37	0.010	0.004
9-Jun-2016	14:19:37	0.002	0.004
9-Jun-2016	14:23:37	0.000	0.001
9-Jun-2016	14:27:37	0.000	0.000
9-Jun-2016	14:31:37	0.000	0.000
9-Jun-2016	14:35:37	0.000	0.000
9-Jun-2016	14:39:37	0.000	0.000
9-Jun-2016	14:43:37	0.000	0.000
9-Jun-2016	14:47:37	0.000	0.000
9-Jun-2016	14:51:37	0.000	0.000
9-Jun-2016	14:55:37	0.000	0.000
9-Jun-2016	14:59:37	0.000	0.000
9-Jun-2016	15:03:37	0.000	0.000
9-Jun-2016	15:07:37	0.000	0.000
9-Jun-2016	15:11:37	0.000	0.000
9-Jun-2016	15:15:37	0.000	0.000
9-Jun-2016	15:19:37	0.000	0.000
9-Jun-2016	15:23:37	0.000	0.000
9-Jun-2016	15:27:37	0.000	0.000
9-Jun-2016	15:31:37	0.000	0.004

DUST MONITORING

June 2016

shading indicates values over the threshold

Monitor: 1

Threshold: 0.15 (mg/m^3)

Date	Time	Value (mg/m^3)	TWA (mg/m^3)
9-Jun-2016	15:35:37	0.013	0.004
9-Jun-2016	15:39:37	0.000	0.005
9-Jun-2016	15:43:37	0.001	0.000
9-Jun-2016	15:47:37	0.000	0.002
9-Jun-2016	15:51:37	0.006	0.002
9-Jun-2016	15:55:37	0.001	0.002
9-Jun-2016	15:59:37	0.000	0.000
9-Jun-2016	16:03:37	0.000	0.000
9-Jun-2016	16:07:37	0.000	0.000
9-Jun-2016	16:11:37	0.000	0.000
9-Jun-2016	16:15:37	0.000	0.000
9-Jun-2016	16:19:37	0.000	0.001
9-Jun-2016	16:23:37	0.002	0.001
9-Jun-2016	16:27:37	0.000	0.001
9-Jun-2016	16:31:37	0.000	0.000
9-Jun-2016	16:35:37	0.000	0.000
9-Jun-2016	16:39:37	0.000	0.000
9-Jun-2016	16:43:37	0.000	0.000
9-Jun-2016	16:47:37	0.000	0.000
9-Jun-2016	16:51:37	0.000	0.000
9-Jun-2016	16:55:37	0.000	0.000
9-Jun-2016	16:59:37	0.000	0.000
9-Jun-2016	17:03:37	0.000	0.000
9-Jun-2016	17:07:37	0.000	0.000
9-Jun-2016	17:11:37	0.001	0.000
9-Jun-2016	17:15:37	0.000	0.000
9-Jun-2016	17:19:37	0.000	0.000
9-Jun-2016	17:23:37	0.000	0.000
9-Jun-2016	17:27:37	0.000	0.000
9-Jun-2016	17:31:37	0.000	0.000
9-Jun-2016	17:35:37	0.000	0.000
9-Jun-2016	17:39:37	0.000	0.000
9-Jun-2016	17:43:37	0.000	0.000
9-Jun-2016	17:47:37	0.000	0.000
9-Jun-2016	17:51:37	0.000	0.000
9-Jun-2016	17:55:37	0.000	0.000
9-Jun-2016	17:59:37	0.000	0.000
9-Jun-2016	18:03:37	0.000	0.000
9-Jun-2016	18:07:37	0.000	0.000
9-Jun-2016	18:11:37	0.000	0.000
9-Jun-2016	18:15:37	0.000	0.000

DUST MONITORING

June 2016

shading indicates values over the threshold

Monitor: 1

Threshold: 0.15 (mg/m^3)

Date	Time	Value (mg/m^3)	TWA (mg/m^3)
9-Jun-2016	18:19:37	0.000	0.000
9-Jun-2016	18:23:37	0.000	0.000
9-Jun-2016	18:27:37	0.000	0.000
9-Jun-2016	18:31:37	0.000	0.000
9-Jun-2016	18:35:37	0.000	0.000
9-Jun-2016	18:39:37	0.000	0.000
9-Jun-2016	18:43:37	0.000	0.000
9-Jun-2016	18:47:37	0.001	0.000
9-Jun-2016	18:51:37	0.000	0.000
9-Jun-2016	18:55:37	0.000	0.000
9-Jun-2016	18:59:37	0.000	0.000
9-Jun-2016	19:03:37	0.000	0.000
9-Jun-2016	19:07:37	0.000	0.000
9-Jun-2016	19:11:37	0.001	0.000
9-Jun-2016	19:15:37	0.000	0.001
9-Jun-2016	19:19:37	0.002	0.001
9-Jun-2016	19:23:37	0.000	0.001
9-Jun-2016	19:27:37	0.001	0.000
9-Jun-2016	19:31:37	0.000	0.000
9-Jun-2016	19:35:37	0.000	0.000
9-Jun-2016	19:39:37	0.000	0.000
9-Jun-2016	19:43:37	0.001	0.000
9-Jun-2016	19:47:37	0.000	0.000
9-Jun-2016	19:51:37	0.000	0.000
9-Jun-2016	19:55:37	0.000	0.000
9-Jun-2016	19:59:37	0.000	0.000
9-Jun-2016	20:03:37	0.000	0.000
9-Jun-2016	20:07:37	0.000	0.000
9-Jun-2016	20:11:37	0.000	0.000
9-Jun-2016	20:15:37	0.000	0.000
9-Jun-2016	20:19:37	0.000	0.000
9-Jun-2016	20:23:37	0.000	0.000
9-Jun-2016	20:27:37	0.000	0.000
9-Jun-2016	20:31:37	0.000	0.000
9-Jun-2016	20:35:37	0.000	0.000
9-Jun-2016	20:39:37	0.000	0.000
9-Jun-2016	20:43:37	0.000	0.000
9-Jun-2016	20:47:37	0.000	0.000
9-Jun-2016	20:51:37	0.001	0.000
9-Jun-2016	20:55:37	0.000	0.002
9-Jun-2016	20:59:37	0.004	0.001

DUST MONITORING

June 2016

shading indicates values over the threshold

Monitor: 1

Threshold: 0.15 (mg/m^3)

Date	Time	Value (mg/m^3)	TWA (mg/m^3)
9-Jun-2016	21:03:37	0.000	0.001
9-Jun-2016	21:07:37	0.000	0.000
9-Jun-2016	21:11:37	0.000	0.000
9-Jun-2016	21:15:37	0.000	0.000
9-Jun-2016	21:19:37	0.001	0.000
9-Jun-2016	21:23:37	0.000	0.000
9-Jun-2016	21:27:37	0.000	0.000
9-Jun-2016	21:31:37	0.000	0.000
9-Jun-2016	21:35:37	0.000	0.000
9-Jun-2016	21:39:37	0.000	0.000
10-Jun-2016	07:57:13	0.008	0.006
10-Jun-2016	08:01:13	0.003	0.006
10-Jun-2016	08:05:13	0.006	0.010
10-Jun-2016	08:09:13	0.022	0.017
10-Jun-2016	08:13:13	0.022	0.019
10-Jun-2016	08:17:13	0.013	0.016
10-Jun-2016	08:21:13	0.014	0.014
10-Jun-2016	08:25:13	0.016	0.016
10-Jun-2016	08:29:13	0.017	0.017
10-Jun-2016	08:33:13	0.019	0.013
10-Jun-2016	08:37:13	0.004	0.010
10-Jun-2016	08:41:13	0.007	0.005
10-Jun-2016	08:45:13	0.005	0.005
10-Jun-2016	08:49:13	0.004	0.004
10-Jun-2016	08:53:13	0.003	0.002
10-Jun-2016	08:57:13	0.000	0.010
10-Jun-2016	09:01:13	0.028	0.018
10-Jun-2016	09:05:13	0.025	0.019
10-Jun-2016	09:09:13	0.005	0.010
10-Jun-2016	09:13:13	0.001	0.003
10-Jun-2016	09:17:13	0.004	0.003
10-Jun-2016	09:21:13	0.005	0.004
10-Jun-2016	09:25:13	0.003	0.004
10-Jun-2016	09:29:13	0.004	0.003
10-Jun-2016	09:33:13	0.002	0.002
10-Jun-2016	09:37:13	0.001	0.002
10-Jun-2016	09:41:13	0.003	0.002
10-Jun-2016	09:45:13	0.002	0.003
10-Jun-2016	09:49:13	0.003	0.004
10-Jun-2016	09:53:13	0.007	0.004
10-Jun-2016	09:57:13	0.002	0.003

DUST MONITORING

June 2016

shading indicates values over the threshold

Monitor: 1

Threshold: 0.15 (mg/m^3)

Date	Time	Value (mg/m^3)	TWA (mg/m^3)
10-Jun-2016	10:01:13	0.001	0.001
10-Jun-2016	10:05:13	0.001	0.001
10-Jun-2016	10:09:13	0.002	0.002
10-Jun-2016	10:13:13	0.002	0.002
10-Jun-2016	10:17:13	0.003	0.002
10-Jun-2016	10:21:13	0.002	0.002
10-Jun-2016	10:25:13	0.002	0.002
10-Jun-2016	10:29:13	0.003	0.002
10-Jun-2016	10:33:13	0.002	0.003
10-Jun-2016	10:37:13	0.005	0.005
10-Jun-2016	10:41:13	0.007	0.006
10-Jun-2016	10:45:13	0.006	0.007
10-Jun-2016	10:49:13	0.008	0.007
10-Jun-2016	10:53:13	0.006	0.025
10-Jun-2016	10:57:13	0.060	0.025
10-Jun-2016	11:01:13	0.010	0.027
10-Jun-2016	11:05:13	0.012	0.012
10-Jun-2016	11:09:13	0.013	0.012
10-Jun-2016	11:13:13	0.012	0.012
10-Jun-2016	11:17:13	0.012	0.012
10-Jun-2016	11:21:13	0.011	0.011
10-Jun-2016	11:25:13	0.011	0.011
10-Jun-2016	11:29:13	0.010	0.011
10-Jun-2016	11:33:13	0.012	0.011
10-Jun-2016	11:37:13	0.010	0.011
10-Jun-2016	11:41:13	0.012	0.021
10-Jun-2016	11:45:13	0.041	0.022
10-Jun-2016	11:49:13	0.012	0.021
10-Jun-2016	11:53:13	0.010	0.027
10-Jun-2016	11:57:13	0.058	0.026
10-Jun-2016	12:01:13	0.011	0.034
10-Jun-2016	12:05:13	0.034	0.019
10-Jun-2016	12:09:13	0.011	0.019
10-Jun-2016	12:13:13	0.011	0.011
10-Jun-2016	12:17:13	0.010	0.011
10-Jun-2016	12:21:13	0.012	0.010
10-Jun-2016	12:25:13	0.008	0.011
10-Jun-2016	12:29:13	0.012	0.009
10-Jun-2016	12:33:13	0.007	0.008
10-Jun-2016	12:37:13	0.006	0.010
10-Jun-2016	12:41:13	0.018	0.010

DUST MONITORING

June 2016

shading indicates values over the threshold

Monitor: 1

Threshold: 0.15 (mg/m^3)

Date	Time	Value (mg/m^3)	TWA (mg/m^3)
10-Jun-2016	12:45:13	0.007	0.011
10-Jun-2016	12:49:13	0.007	0.007
10-Jun-2016	12:53:13	0.007	0.007
10-Jun-2016	12:57:13	0.008	0.007
10-Jun-2016	13:01:13	0.007	0.008
10-Jun-2016	13:05:13	0.008	0.007
10-Jun-2016	13:09:13	0.007	0.008
10-Jun-2016	13:13:13	0.008	0.008
10-Jun-2016	13:17:13	0.008	0.008
10-Jun-2016	13:21:13	0.008	0.027
10-Jun-2016	13:25:13	0.066	0.028
10-Jun-2016	13:29:13	0.011	0.029
10-Jun-2016	13:33:13	0.010	0.010
10-Jun-2016	13:37:13	0.010	0.010
10-Jun-2016	13:41:13	0.011	0.011
10-Jun-2016	13:45:13	0.011	0.010
10-Jun-2016	13:49:13	0.009	0.010
10-Jun-2016	13:53:13	0.009	0.021
10-Jun-2016	13:57:13	0.046	0.021
10-Jun-2016	14:01:13	0.008	0.022
10-Jun-2016	14:05:13	0.012	0.019
10-Jun-2016	14:09:13	0.038	0.020
10-Jun-2016	14:13:13	0.010	0.019
10-Jun-2016	14:17:13	0.009	0.009
10-Jun-2016	14:21:13	0.008	0.012
10-Jun-2016	14:25:13	0.019	0.013
10-Jun-2016	14:29:13	0.011	0.016
10-Jun-2016	14:33:13	0.018	0.013
10-Jun-2016	14:37:13	0.010	0.038
10-Jun-2016	14:41:13	0.086	0.039
10-Jun-2016	14:45:13	0.020	0.065
10-Jun-2016	14:49:13	0.089	0.044
10-Jun-2016	14:53:13	0.024	0.042
10-Jun-2016	14:57:13	0.012	0.022
10-Jun-2016	15:01:13	0.029	0.021
14-Jun-2016	07:15:40	0.028	0.031
14-Jun-2016	07:19:40	0.034	0.030
14-Jun-2016	07:23:40	0.029	0.031
14-Jun-2016	07:27:40	0.029	0.028
14-Jun-2016	07:31:40	0.027	0.029
14-Jun-2016	07:35:40	0.030	0.027

DUST MONITORING

June 2016

shading indicates values over the threshold

Monitor: 1

Threshold: 0.15 (mg/m^3)

Date	Time	Value (mg/m^3)	TWA (mg/m^3)
14-Jun-2016	07:39:40	0.025	0.027
14-Jun-2016	07:43:40	0.027	0.026
14-Jun-2016	07:47:40	0.025	0.025
14-Jun-2016	07:51:40	0.022	0.023
14-Jun-2016	07:55:40	0.023	0.023
14-Jun-2016	07:59:40	0.025	0.024
14-Jun-2016	08:03:40	0.025	0.023
14-Jun-2016	08:07:40	0.020	0.022
14-Jun-2016	08:11:40	0.022	0.023
14-Jun-2016	08:15:40	0.028	0.026
14-Jun-2016	08:19:40	0.029	0.028
14-Jun-2016	08:23:40	0.027	0.026
14-Jun-2016	08:27:40	0.023	0.025
14-Jun-2016	08:31:40	0.024	0.027
14-Jun-2016	08:35:40	0.033	0.030
14-Jun-2016	08:39:40	0.034	0.033
14-Jun-2016	08:43:40	0.033	0.033
14-Jun-2016	08:47:40	0.031	0.033
14-Jun-2016	08:51:40	0.036	0.036
14-Jun-2016	08:55:40	0.040	0.040
14-Jun-2016	08:59:40	0.043	0.041
14-Jun-2016	09:03:40	0.040	0.041
14-Jun-2016	09:07:40	0.040	0.041
14-Jun-2016	09:11:40	0.043	0.044
14-Jun-2016	09:15:40	0.048	0.048
14-Jun-2016	09:19:40	0.054	0.048
14-Jun-2016	09:23:40	0.043	0.056
14-Jun-2016	09:27:40	0.072	0.052
14-Jun-2016	09:31:40	0.040	0.051
14-Jun-2016	09:35:40	0.042	0.042
14-Jun-2016	09:39:40	0.045	0.043
14-Jun-2016	09:43:40	0.043	0.043
14-Jun-2016	09:47:40	0.042	0.042
14-Jun-2016	09:51:40	0.040	0.041
14-Jun-2016	09:55:40	0.042	0.041
14-Jun-2016	09:59:40	0.042	0.043
14-Jun-2016	10:03:40	0.044	0.045
14-Jun-2016	10:07:40	0.048	0.046
14-Jun-2016	10:11:40	0.045	0.046
14-Jun-2016	10:15:40	0.044	0.044
14-Jun-2016	10:19:40	0.042	0.043

DUST MONITORING

June 2016

shading indicates values over the threshold

Monitor: 1

Threshold: 0.15 (mg/m^3)

Date	Time	Value (mg/m^3)	TWA (mg/m^3)
14-Jun-2016	10:23:40	0.042	0.042
14-Jun-2016	10:27:40	0.042	0.042
14-Jun-2016	10:31:40	0.042	0.042
14-Jun-2016	10:35:40	0.042	0.042
14-Jun-2016	10:39:40	0.041	0.041
14-Jun-2016	10:43:40	0.040	0.040
14-Jun-2016	10:47:40	0.039	0.039
14-Jun-2016	10:51:40	0.037	0.038
14-Jun-2016	10:55:40	0.037	0.037
14-Jun-2016	10:59:40	0.038	0.038
14-Jun-2016	11:03:40	0.040	0.040
14-Jun-2016	11:07:40	0.041	0.041
14-Jun-2016	11:11:40	0.041	0.041
14-Jun-2016	11:15:40	0.041	0.041
14-Jun-2016	11:19:40	0.042	0.041
14-Jun-2016	11:23:40	0.040	0.041
14-Jun-2016	11:27:40	0.041	0.040
14-Jun-2016	11:31:40	0.040	0.040
14-Jun-2016	11:35:40	0.040	0.040
14-Jun-2016	11:39:40	0.040	0.040
14-Jun-2016	11:43:40	0.039	0.039
14-Jun-2016	11:47:40	0.039	0.040
14-Jun-2016	11:51:40	0.042	0.041
14-Jun-2016	11:55:40	0.041	0.041
14-Jun-2016	11:59:40	0.039	0.040
14-Jun-2016	12:03:40	0.039	0.040
14-Jun-2016	12:07:40	0.042	0.041
14-Jun-2016	12:11:40	0.042	0.042
14-Jun-2016	12:15:40	0.041	0.041
14-Jun-2016	12:19:40	0.041	0.041
14-Jun-2016	12:23:40	0.040	0.040
14-Jun-2016	12:27:40	0.040	0.040
14-Jun-2016	12:31:40	0.041	0.040
14-Jun-2016	12:35:40	0.040	0.043
14-Jun-2016	12:39:40	0.047	0.042
14-Jun-2016	12:43:40	0.040	0.042
14-Jun-2016	12:47:40	0.038	0.038
14-Jun-2016	12:51:40	0.036	0.037
14-Jun-2016	12:55:40	0.038	0.037
14-Jun-2016	12:59:40	0.037	0.038
14-Jun-2016	13:03:40	0.038	0.037

DUST MONITORING

June 2016

shading indicates values over the threshold

Monitor: 1

Threshold: 0.15 (mg/m^3)

Date	Time	Value (mg/m^3)	TWA (mg/m^3)
14-Jun-2016	13:07:40	0.037	0.037
14-Jun-2016	13:11:40	0.036	0.036
14-Jun-2016	13:15:40	0.036	0.036
14-Jun-2016	13:19:40	0.036	0.036
14-Jun-2016	13:23:40	0.037	0.037
14-Jun-2016	13:27:40	0.037	0.038
14-Jun-2016	13:31:40	0.040	0.039
14-Jun-2016	13:35:40	0.040	0.040
14-Jun-2016	13:39:40	0.039	0.039
14-Jun-2016	13:43:40	0.038	0.038
14-Jun-2016	13:47:40	0.038	0.038
14-Jun-2016	13:51:40	0.039	0.038
14-Jun-2016	13:55:40	0.038	0.038
14-Jun-2016	13:59:40	0.038	0.038
14-Jun-2016	14:03:40	0.037	0.037
14-Jun-2016	14:07:40	0.035	0.036
14-Jun-2016	14:11:40	0.036	0.036
14-Jun-2016	14:15:40	0.036	0.036
14-Jun-2016	14:19:40	0.036	0.036
14-Jun-2016	14:23:40	0.037	0.036
14-Jun-2016	14:27:40	0.036	0.037
14-Jun-2016	14:31:40	0.037	0.037
14-Jun-2016	14:35:40	0.037	0.037
14-Jun-2016	14:39:40	0.037	0.037
14-Jun-2016	14:43:40	0.038	0.037
14-Jun-2016	14:47:40	0.036	0.036
14-Jun-2016	14:51:40	0.034	0.034
14-Jun-2016	14:55:40	0.032	0.033
14-Jun-2016	14:59:40	0.034	0.034
14-Jun-2016	15:03:40	0.036	0.035
14-Jun-2016	15:07:40	0.036	0.037
14-Jun-2016	15:11:40	0.038	0.037
14-Jun-2016	15:15:40	0.038	0.037
14-Jun-2016	15:19:40	0.036	0.037
23-Jun-2016	08:25:48	0.067	0.072
23-Jun-2016	08:29:48	0.076	0.069
23-Jun-2016	08:33:48	0.064	0.066
23-Jun-2016	08:37:48	0.059	0.063
23-Jun-2016	08:41:48	0.065	0.062
23-Jun-2016	08:45:48	0.063	0.062
23-Jun-2016	08:49:48	0.059	0.062

DUST MONITORING

June 2016

shading indicates values over the threshold

Monitor: 1

Threshold: 0.15 (mg/m^3)

Date	Time	Value (mg/m^3)	TWA (mg/m^3)
23-Jun-2016	08:53:48	0.064	0.061
23-Jun-2016	08:57:48	0.059	0.061
23-Jun-2016	09:01:48	0.059	0.057
23-Jun-2016	09:05:48	0.053	0.056
23-Jun-2016	09:09:48	0.056	0.055
23-Jun-2016	09:13:48	0.055	0.057
23-Jun-2016	09:17:48	0.059	0.057
23-Jun-2016	09:21:48	0.056	0.058
23-Jun-2016	09:25:48	0.058	0.057
23-Jun-2016	09:29:48	0.056	0.055
23-Jun-2016	09:33:48	0.052	0.055
23-Jun-2016	09:37:48	0.058	0.058
23-Jun-2016	09:41:48	0.063	0.065
23-Jun-2016	09:45:48	0.075	0.065
23-Jun-2016	09:49:48	0.056	0.064
23-Jun-2016	09:53:48	0.060	0.061
23-Jun-2016	09:57:48	0.066	0.064
23-Jun-2016	10:01:48	0.067	0.062
23-Jun-2016	10:05:48	0.053	0.062
23-Jun-2016	10:09:48	0.066	0.061
23-Jun-2016	10:13:48	0.063	0.063
23-Jun-2016	10:17:48	0.060	0.063
23-Jun-2016	10:21:48	0.067	0.094
23-Jun-2016	10:25:48	0.156	0.096
23-Jun-2016	10:29:48	0.066	0.094
23-Jun-2016	10:33:48	0.061	0.064
23-Jun-2016	10:37:48	0.064	0.064
23-Jun-2016	10:41:48	0.066	0.064
23-Jun-2016	10:45:48	0.062	0.062
23-Jun-2016	10:49:48	0.059	0.060
23-Jun-2016	10:53:48	0.059	0.059
23-Jun-2016	10:57:48	0.060	0.060
23-Jun-2016	11:01:48	0.060	0.060
23-Jun-2016	11:05:48	0.060	0.060
23-Jun-2016	11:09:48	0.059	0.059
23-Jun-2016	11:13:48	0.059	0.058
23-Jun-2016	11:17:48	0.056	0.057
23-Jun-2016	11:21:48	0.056	0.056
23-Jun-2016	11:25:48	0.056	0.056
23-Jun-2016	11:29:48	0.055	0.056
23-Jun-2016	11:33:48	0.056	0.056

DUST MONITORING

June 2016

shading indicates values over the threshold

Monitor: 1

Threshold: 0.15 (mg/m^3)

Date	Time	Value (mg/m^3)	TWA (mg/m^3)
23-Jun-2016	11:37:48	0.057	0.057
23-Jun-2016	11:41:48	0.058	0.058
23-Jun-2016	11:45:48	0.058	0.060
23-Jun-2016	11:49:48	0.065	0.061
23-Jun-2016	11:53:48	0.060	0.062
23-Jun-2016	11:57:48	0.061	0.060
23-Jun-2016	12:01:48	0.060	0.062
23-Jun-2016	12:05:48	0.064	0.063
23-Jun-2016	12:09:48	0.064	0.066
23-Jun-2016	12:13:48	0.071	0.073
23-Jun-2016	12:17:48	0.084	0.075
23-Jun-2016	12:21:48	0.070	0.076
23-Jun-2016	12:25:48	0.074	0.069
23-Jun-2016	12:29:48	0.062	0.068
23-Jun-2016	12:33:48	0.069	0.066
23-Jun-2016	12:37:48	0.068	0.068
23-Jun-2016	12:41:48	0.066	0.066
23-Jun-2016	12:45:48	0.065	0.067
23-Jun-2016	12:49:48	0.070	0.068
23-Jun-2016	12:53:48	0.068	0.070
23-Jun-2016	12:57:48	0.073	0.070
23-Jun-2016	13:01:48	0.069	0.070
23-Jun-2016	13:05:48	0.068	0.068
23-Jun-2016	13:09:48	0.067	0.067
23-Jun-2016	13:13:48	0.065	0.066
23-Jun-2016	13:17:48	0.067	0.068
23-Jun-2016	13:21:48	0.071	0.068
23-Jun-2016	13:25:48	0.065	0.069
23-Jun-2016	13:29:48	0.070	0.068
23-Jun-2016	13:33:48	0.068	0.069
23-Jun-2016	13:37:48	0.068	0.069
23-Jun-2016	13:41:48	0.070	0.068
23-Jun-2016	13:45:48	0.066	0.069
23-Jun-2016	13:49:48	0.070	0.070
23-Jun-2016	13:53:48	0.073	0.070
23-Jun-2016	13:57:48	0.066	0.068
23-Jun-2016	14:01:48	0.066	0.066
23-Jun-2016	14:05:48	0.067	0.071
23-Jun-2016	14:09:48	0.081	0.071
23-Jun-2016	14:13:48	0.064	0.069
23-Jun-2016	14:17:48	0.062	0.062

DUST MONITORING

June 2016

shading indicates values over the threshold

Monitor: 1

Threshold: 0.15 (mg/m^3)

Date	Time	Value (mg/m^3)	TWA (mg/m^3)
23-Jun-2016	14:21:48	0.060	0.060
23-Jun-2016	14:25:48	0.059	0.060
23-Jun-2016	14:29:48	0.062	0.061
23-Jun-2016	14:33:48	0.061	0.062
23-Jun-2016	14:37:48	0.063	0.063
23-Jun-2016	14:41:48	0.064	0.065
23-Jun-2016	14:45:48	0.068	0.067
23-Jun-2016	14:49:48	0.068	0.070
23-Jun-2016	14:53:48	0.074	0.070
23-Jun-2016	14:57:48	0.069	0.071
23-Jun-2016	15:01:48	0.070	0.070
23-Jun-2016	15:05:48	0.072	0.070
23-Jun-2016	15:09:48	0.067	0.068
23-Jun-2016	15:13:48	0.066	0.065
23-Jun-2016	15:17:48	0.063	0.065
23-Jun-2016	15:21:48	0.066	0.065
23-Jun-2016	15:25:48	0.067	0.066
23-Jun-2016	15:29:48	0.065	0.065
23-Jun-2016	15:33:48	0.062	0.065
23-Jun-2016	15:37:48	0.067	0.068
23-Jun-2016	15:41:48	0.076	0.069
23-Jun-2016	15:45:48	0.064	0.067
23-Jun-2016	15:49:48	0.062	0.063
23-Jun-2016	15:53:48	0.062	0.062
23-Jun-2016	15:57:48	0.063	0.063
23-Jun-2016	16:01:48	0.063	0.063
23-Jun-2016	16:05:48	0.063	0.063
23-Jun-2016	16:09:48	0.063	0.063
23-Jun-2016	16:13:48	0.064	0.063
23-Jun-2016	16:17:48	0.062	0.063
23-Jun-2016	16:21:48	0.063	0.062
23-Jun-2016	16:25:48	0.060	0.061
23-Jun-2016	16:29:48	0.060	0.060
23-Jun-2016	16:33:48	0.061	0.061
23-Jun-2016	16:37:48	0.061	0.061
23-Jun-2016	16:41:48	0.060	0.060
23-Jun-2016	16:45:48	0.060	0.061
23-Jun-2016	16:49:48	0.062	0.061
23-Jun-2016	16:53:48	0.060	0.062
23-Jun-2016	16:57:48	0.063	0.061
23-Jun-2016	17:01:48	0.061	0.062

DUST MONITORING

June 2016

shading indicates values over the threshold

Monitor: 1

Threshold: 0.15 (mg/m^3)

Date	Time	Value (mg/m^3)	TWA (mg/m^3)
23-Jun-2016	17:05:48	0.061	0.061
23-Jun-2016	17:09:48	0.062	0.061
23-Jun-2016	17:13:48	0.060	0.060
23-Jun-2016	17:17:48	0.058	0.059
23-Jun-2016	17:21:48	0.060	0.059
23-Jun-2016	17:25:48	0.060	0.060
23-Jun-2016	17:29:48	0.060	0.061
23-Jun-2016	17:33:48	0.062	0.062
23-Jun-2016	17:37:48	0.064	0.063
23-Jun-2016	17:41:48	0.063	0.063
23-Jun-2016	17:45:48	0.063	0.063
23-Jun-2016	17:49:48	0.063	0.063
23-Jun-2016	17:53:48	0.062	0.063
23-Jun-2016	17:57:48	0.063	0.062
23-Jun-2016	18:01:48	0.062	0.063
23-Jun-2016	18:05:48	0.063	0.062
23-Jun-2016	18:09:48	0.060	0.061
23-Jun-2016	18:13:48	0.060	0.061
23-Jun-2016	18:17:48	0.063	0.062
23-Jun-2016	18:21:48	0.063	0.064
23-Jun-2016	18:25:48	0.065	0.065
23-Jun-2016	18:29:48	0.066	0.065
23-Jun-2016	18:33:48	0.064	0.065
23-Jun-2016	18:37:48	0.065	0.065
23-Jun-2016	18:41:48	0.066	0.066
23-Jun-2016	18:45:48	0.067	0.068
23-Jun-2016	18:49:48	0.070	0.068
23-Jun-2016	18:53:48	0.066	0.068
23-Jun-2016	18:57:48	0.067	0.066
23-Jun-2016	19:01:48	0.066	0.067
23-Jun-2016	19:05:48	0.067	0.067
23-Jun-2016	19:09:48	0.067	0.067
23-Jun-2016	19:13:48	0.067	0.066
23-Jun-2016	19:17:48	0.065	0.066
23-Jun-2016	19:21:48	0.065	0.065
23-Jun-2016	19:25:48	0.064	0.064
23-Jun-2016	19:29:48	0.064	0.064
23-Jun-2016	19:33:48	0.064	0.064
23-Jun-2016	19:37:48	0.064	0.064
23-Jun-2016	19:41:48	0.064	0.064
23-Jun-2016	19:45:48	0.064	0.064

DUST MONITORING

June 2016

shading indicates values over the threshold

Monitor: 1

Threshold: 0.15 (mg/m^3)

Date	Time	Value (mg/m^3)	TWA (mg/m^3)
23-Jun-2016	19:49:48	0.064	0.064
23-Jun-2016	19:53:48	0.064	0.064
23-Jun-2016	19:57:48	0.064	0.064
23-Jun-2016	20:01:48	0.065	0.065
23-Jun-2016	20:05:48	0.065	0.064
23-Jun-2016	20:09:48	0.061	0.061
23-Jun-2016	20:13:48	0.058	0.059
23-Jun-2016	20:17:48	0.058	0.058
23-Jun-2016	20:21:48	0.058	0.059
23-Jun-2016	20:25:48	0.061	0.060
23-Jun-2016	20:29:48	0.060	0.060
23-Jun-2016	20:33:48	0.058	0.160
23-Jun-2016	20:37:48	0.361	0.238
23-Jun-2016	20:41:48	0.294	0.239
23-Jun-2016	20:45:48	0.062	0.140
23-Jun-2016	20:49:48	0.065	0.064
23-Jun-2016	20:53:48	0.066	0.066
23-Jun-2016	20:57:48	0.067	0.066
23-Jun-2016	21:01:48	0.066	0.066
23-Jun-2016	21:05:48	0.066	0.066
23-Jun-2016	21:09:48	0.066	0.066
23-Jun-2016	21:13:48	0.065	0.064
23-Jun-2016	21:17:48	0.061	0.062
23-Jun-2016	21:21:48	0.060	0.060
23-Jun-2016	21:25:48	0.060	0.060
23-Jun-2016	21:29:48	0.061	0.061
23-Jun-2016	21:33:48	0.061	0.064
23-Jun-2016	21:37:48	0.070	1.427
23-Jun-2016	21:41:48	4.150	1.427
23-Jun-2016	21:45:48	0.060	1.423
23-Jun-2016	21:49:48	0.058	0.059
23-Jun-2016	21:53:48	0.058	0.058
23-Jun-2016	21:57:48	0.059	0.059
23-Jun-2016	22:01:48	0.060	0.060
23-Jun-2016	22:05:48	0.060	0.061
23-Jun-2016	22:09:48	0.064	0.063
23-Jun-2016	22:13:48	0.065	0.065
23-Jun-2016	22:17:48	0.065	0.065
23-Jun-2016	22:21:48	0.064	0.064
23-Jun-2016	22:25:48	0.064	0.064
23-Jun-2016	22:29:48	0.064	0.064

DUST MONITORING

June 2016

shading indicates values over the threshold

Monitor: 1

Threshold: 0.15 (mg/m^3)

Date	Time	Value (mg/m^3)	TWA (mg/m^3)
29-Jun-2016	13:58:33	0.100	0.083
29-Jun-2016	14:02:33	0.066	0.077
29-Jun-2016	14:06:33	0.064	0.065
29-Jun-2016	14:10:33	0.064	0.064
29-Jun-2016	14:14:33	0.065	0.065
29-Jun-2016	14:18:33	0.065	0.065
29-Jun-2016	14:22:33	0.064	0.064
29-Jun-2016	14:26:33	0.063	0.063
29-Jun-2016	14:30:33	0.062	0.062
29-Jun-2016	14:34:33	0.061	0.062
29-Jun-2016	14:38:33	0.062	0.062
29-Jun-2016	14:42:33	0.064	0.063
29-Jun-2016	14:46:33	0.063	0.064
29-Jun-2016	14:50:33	0.064	0.064
29-Jun-2016	14:54:33	0.064	0.066
29-Jun-2016	14:58:33	0.071	0.066
29-Jun-2016	15:02:33	0.064	0.067
29-Jun-2016	15:06:33	0.065	0.064
29-Jun-2016	15:10:33	0.063	0.065
29-Jun-2016	15:14:33	0.066	0.069
29-Jun-2016	15:18:33	0.077	0.069
29-Jun-2016	15:22:33	0.064	0.070
29-Jun-2016	15:26:33	0.068	0.074
29-Jun-2016	15:30:33	0.091	0.076
29-Jun-2016	15:34:33	0.070	0.078
29-Jun-2016	15:38:33	0.074	0.072

DUST MONITORING

July 2016

shading indicates values over the threshold

Monitor: 1

Threshold: 0.15 (mg/m^3)

Date	Time	Value (mg/m^3)	TWA (mg/m^3)
19-Jul-2016	09:25:51	0.098	0.122
19-Jul-2016	09:29:51	0.146	0.111
19-Jul-2016	09:33:51	0.090	0.110
19-Jul-2016	09:37:51	0.094	0.094
19-Jul-2016	09:41:51	0.097	0.094
19-Jul-2016	09:45:51	0.090	0.097
19-Jul-2016	09:49:51	0.103	0.094
19-Jul-2016	09:53:51	0.090	0.093
19-Jul-2016	09:57:51	0.087	0.088
19-Jul-2016	10:01:51	0.087	0.087
19-Jul-2016	10:05:51	0.086	0.096
19-Jul-2016	10:09:51	0.116	0.107
19-Jul-2016	10:13:51	0.120	0.108
19-Jul-2016	10:17:51	0.089	0.099
19-Jul-2016	10:21:51	0.087	0.098
19-Jul-2016	10:25:51	0.119	0.098
19-Jul-2016	10:29:51	0.088	0.097
19-Jul-2016	10:33:51	0.085	0.092
19-Jul-2016	10:37:51	0.102	0.104
19-Jul-2016	10:41:51	0.125	0.115
19-Jul-2016	10:45:51	0.118	0.269
19-Jul-2016	10:49:51	0.563	0.286
19-Jul-2016	10:53:51	0.177	0.403
19-Jul-2016	10:57:51	0.469	0.255
19-Jul-2016	11:01:51	0.118	0.277
19-Jul-2016	11:05:51	0.244	0.154
19-Jul-2016	11:09:51	0.100	0.144
19-Jul-2016	11:13:51	0.087	0.105
19-Jul-2016	11:17:51	0.129	0.100
19-Jul-2016	11:21:51	0.084	0.099
19-Jul-2016	11:25:51	0.084	0.086
19-Jul-2016	11:29:51	0.089	0.088
19-Jul-2016	11:33:51	0.091	0.089
19-Jul-2016	11:37:51	0.087	0.088
19-Jul-2016	11:41:51	0.085	0.112
19-Jul-2016	11:45:51	0.163	0.112
19-Jul-2016	11:49:51	0.088	0.120
19-Jul-2016	11:53:51	0.110	0.109
19-Jul-2016	11:57:51	0.130	0.124
19-Jul-2016	12:01:51	0.131	0.193
19-Jul-2016	12:05:51	0.317	0.181

DUST MONITORING

July 2016

shading indicates values over the threshold

Monitor: 1

Threshold: 0.15 (mg/m^3)

Date	Time	Value (mg/m^3)	TWA (mg/m^3)
19-Jul-2016	12:09:51	0.095	0.171
19-Jul-2016	12:13:51	0.102	0.100
19-Jul-2016	12:17:51	0.103	0.103
19-Jul-2016	12:21:51	0.104	0.099
19-Jul-2016	12:25:51	0.091	0.097
19-Jul-2016	12:29:51	0.095	0.101
19-Jul-2016	12:33:51	0.116	0.102
19-Jul-2016	12:37:51	0.096	0.104
19-Jul-2016	12:41:51	0.099	0.094
19-Jul-2016	12:45:51	0.087	0.104
19-Jul-2016	12:49:51	0.127	0.099
19-Jul-2016	12:53:51	0.084	0.098
19-Jul-2016	12:57:51	0.084	0.087
19-Jul-2016	13:01:51	0.092	0.093
19-Jul-2016	13:05:51	0.104	0.094
19-Jul-2016	13:09:51	0.085	0.117
19-Jul-2016	13:13:51	0.163	0.114
19-Jul-2016	13:17:51	0.095	0.214
19-Jul-2016	13:21:51	0.385	0.211
19-Jul-2016	13:25:51	0.154	0.208
19-Jul-2016	13:29:51	0.085	0.114
19-Jul-2016	13:33:51	0.103	0.094
19-Jul-2016	13:37:51	0.094	0.095
19-Jul-2016	13:41:51	0.089	0.101
19-Jul-2016	13:45:51	0.121	0.099
19-Jul-2016	13:53:51	0.088	0.099
19-Jul-2016	13:57:51	0.087	0.089
19-Jul-2016	14:01:51	0.091	0.089
19-Jul-2016	14:05:51	0.088	0.090
19-Jul-2016	14:09:51	0.091	0.100
19-Jul-2016	14:13:51	0.122	0.100
19-Jul-2016	14:17:51	0.088	0.139
19-Jul-2016	14:21:51	0.206	0.130
19-Jul-2016	14:25:51	0.095	0.137
19-Jul-2016	14:29:51	0.109	0.142
19-Jul-2016	14:33:51	0.221	0.148
19-Jul-2016	14:37:51	0.113	0.143
19-Jul-2016	14:41:51	0.094	0.416
19-Jul-2016	14:45:51	1.041	0.410
19-Jul-2016	14:49:51	0.095	0.776
19-Jul-2016	14:53:51	1.192	0.644

APPENDIX Y

CONSTRUCTION MATERIAL QUANTITY SUMMARY

ANNISTON PCB SITE - REMEDIAL ACTION COVER SYSTEMS PROJECT

FINAL MATERIAL QUANTITIES

BID ITEM NO.	DESCRIPTION	UNIT	FINAL QTY
DIVISION 01 – GENERAL REQUIREMENTS			
011100	General Requirements		
011100-01	Mobilization/Demobilization	LS	1
011100-02	Temporary Facilities	LS	1
011100-03	Site Security	LS	1
011900	Surveying		
011900-01	Surveying	LS	1
013529.13	Health, Safety, and Emergency Response Procedures		
013529.13-01	Contractor Health and Safety Officer	WK	58.03
013529.13-02	Safe Hours Worked	Hrs	41655
DIVISION 03 – CONCRETE			
033000	Cast-In-Place Concrete		
033000-01	Concrete Wall (24" or less)	LF	26
033000-02	Concrete Wall (24" to 36")	LF	589
033000-03	Concrete Wall (36" or greater)	LF	321
033000-04	Concrete Cover (Autoclave)	SF	6800
033000-05	Repair for Existing Retaining Wall	PS	1
033000-06	Concrete Cover (Area A)	SF	9328

ANNISTON PCB SITE - REMEDIAL ACTION COVER SYSTEMS PROJECT

FINAL MATERIAL QUANTITIES

BID ITEM NO.	DESCRIPTION	UNIT	FINAL QTY
DIVISION 02, 31 & 32 – EARTHWORK, GEOSYNTHETICS, AND EXTERIOR IMPROVEMENTS			
024100	Demolition		
024100-01	Removal of Existing Weather Station	LS	1
024100-02	Removal of Existing Fencing	LF	2192
024100-03	Cut and Remove Existing Guardrail for Areas C and D	LS	1
025613	HDPE Geomembrane		
025613-01	Supply and Install 40-mil textured HDPE Geomembrane	SF	504627.31
025613-02	Supply and Install Fire Hydrant and Water Valve Extensions	EA	5
026113	Excavation and Handling of PCB Impacted Materials		
026113-01	Excavation and Handling of PCB Impacted Materials	TON	1203
310001	Earthfill Materials		
310001-01	Bridging of Soft Subsurface	SF	5841
310001-02	Supply and Install Soil Cover	CY	19700
310001-03	Supply and Install Topsoil	CY	9703
310002	Granular Drainage Material		
310002-01	Supply and Install ALDOT No. 57 Stone (Drainage)	TON	390.4
310200	Rip Rap		
310200-01	Supply and Install ALDOT Class 1 Rip-Rap	TON	2897.34
310519	Geotextile		
310519-01	Supply and Install 6 oz. Geotextile (Drainage)	SF	8895
310519-02	Supply and Install 10 oz. Geotextile (Rip Rap)	SF	66246
310520	Geocomposite Drainage Net		
310520-01	Supply and Install Double Sided Geocomposite Drainage Net	SF	504627.31
311112	Grubbing		

ANNISTON PCB SITE - REMEDIAL ACTION COVER SYSTEMS PROJECT

FINAL MATERIAL QUANTITIES

BID ITEM NO.	DESCRIPTION	UNIT	FINAL QTY
311112-01	Clearing and Grubbing	AC	11.82
311113	Site Grading and Subgrade Preparation		
311113-01	Preparation of Subgrade with Soil	CY	11316
311113-02	Supply and Install Dense Graded Aggregate (subgrade prep)	TON	4791.48
313211	Erosion/Sediment Control		
313211-01	Silt Fence	LF	2960
313211-02	Straw Sediment Barriers (Wattles)	LF	2562
313211-03	Filter Ring	EA	1
313211-04	Temporary Seeding	AC	0.33
313211-05	Sediment Bags for De-Watering (includes required pumping)	EA	0.5
313211-06	Surface Water Management / E&S Controls Maintenance	LS	1
321123	Dense Graded Aggregate		
321123-01	Supply and Install Dense Graded Aggregate (12-inch Cover)	TON	15120.02
321123-02	Geocells	SF	160000
323113	Chain Link Fence and Gates		
323113-01	Chain Link Fence	LF	8197
323113-02	16-ft Manual Gates	EA	6
329219	Seeding and Mulching		
329219-01	Seeding and Mulching	AC	10.4
DIVISION 33 – PIPING			
336001	Pipes and Valves		
336001-01	2-inch Diameter HDPE Piping	LF	437
336001-02	24-inch CMP Culverts	LF	
336001-03	4-inch ADS Drain Pipe	LF	593
336001-04	PVC Drain Pipe and Rain Gutters	LS	1

APPENDIX Z

HEALTH, SAFETY, AND ENVIRONMENTAL ISSUES

APPENDIX Z1

Site Safety Audit

MEMORANDUM

TO: Ms. E. Gayle Macolly, Solutia Inc. November 5, 2015

FR: Charles Haury, Golder Associates Inc.

RE: SITE SAFETY AUDIT – OCTOBER 14 AND 15 (ANNISTON, ALABAMA)

Golder Associates Inc. (Golder) prepared this memorandum to summarize the findings of our Site Safety Audit (Audit) performed for the Operable Unit 3 (OU-3) Remedial Action (RA) Cover Systems Project. The audit was performed on October 14 and 15, 2015 with a closing meeting to present our findings on the morning of October 15, 2015.

INTRODUCTION

Taylor Corporation (Taylor) with their subcontractor, Brown Construction and Development, LLC (Brown) are performing a variety of civil construction tasks in support of the RA Cover Systems Project. The goal of the audit was twofold, first to observe the contractors performing their assigned tasks and second to review the implementation of Taylor's overall safety program. Along with field observations, Golder interviewed Mr. Jason Joiner, Taylor's safety manager.

The audit was performed in a manner to foster technical exchange and promote improvement of the safety culture. Hazards identified should be abated and implementation of the provided recommendations will enhance the safety program.

FIELD OBSERVATIONS

Brown

- Signage – Signs included on the barrels surrounding the work area near the administration building indicate that the area is an exclusion zone with permission required to enter. It was observed that personnel, including myself were not challenged when the area was entered. This should be changed to a normal construction area (enter with caution) or upgraded to meet hazardous waste exclusion zone criteria.
- Impalement hazards – Rebar was unprotected in many areas of the work area, including a walkway in and out of Area E.
- Fire hazard – Fuels for concrete saws were in use without nearby fire extinguishers. A fire extinguisher was produced upon request that was fully spent. Another had no record of inspection.
- Flexible cords – Cords were not marked to indicate inclusion in an assured grounding program.
- PPE – Several team members did not have Hi-Vis clothing and believed that its use was optional.
- Tools – A broken claw hammer was observed to be in use at the site.

Taylor

- Heavy equipment – The loader in the soil screening operation did not have a working back-up alarm.

- Heavy equipment – A loader with a fork attachment was used to unload the geocomposite rolls. This required workers to climb on the loaded truck, work at height and manually shift many of the rolls. Several rolls fell from the truck. A better solution would be to use a Load-All or similar piece of equipment with a single bar attachment that could remove all rolls from ground level.

Discussion with Jason Joiner

- Field operations – Jason needs to spend the majority of his day out in the operations to be visible, available and promoting the safety culture. Taylor management should ensure that other, non-safety related tasks are performed by others.
- Taylor should consider implementing a daily Job Safety Analysis (JSA) done jointly with the foreman and crew.
- Taylor should ensure that tools are marked to indicate inclusion in an assured grounding program.
- Heavy equipment – All heavy equipment needs to be inspected daily and the inspection recorded.
- Safety meetings – Meetings need to include all subcontractors to enhance the team culture and ensure the flow down of all safety program elements.
- Traffic management – Improvement of traffic management is critical to prevent a major incident. Stop signs, warning signals, and police presence are all options for both on and offsite roads. This should be a common theme for meetings and promotional signage.

All of the site personnel were fully supportive of my activities. Please let me know if you have questions or if more information is necessary.

APPENDIX Z2

Post-Cleanup Inspection and Examination of Incident Site

MEMORANDUM TO FILE

Date: November 17, 2015

To: File Company: Solutia, Inc.

From: R.S. Williams & Associates

Cc: Mr. John Loper, Mr. Mike Price, Mr. Donn Williams

RE: POST CLEAN-UP INSPECTION AND EXAMINATION OF INCIDENT SITE

On Tuesday, November 17, 2015, a physical inspection of the incident site involving an overturned articulating off-road dump truck operated by Taylor Corporation was conducted to determine effectiveness of the cleanup activity and to evaluate physical evidence of any potential residual environmental impacts from the incident which occurred on Monday morning, November 16, 2015.

Seven locations were randomly selected at the incident site biased toward residual accumulation potential and hand excavated to approximately six inches of native soil and examined for physical evidence of diesel fuel. The entry and exit points to the culvert pipe under the gravel roadway immediately down gradient of the incident site were also examined in the same manner. No detections of diesel fuel or other environmental impacts were determined by observation of physical evidence.

All possible drainage and migration pathways to waterways were inspected for physical evidence of visible sheen appearance and odor. These locations included both surface and piped sewer pathways from the catch basin energy dissipater down gradient of the incident site through the East Side Retention Basin and Tenth Street Dissipater discharge to the 11th Street / North Railroad Ditch which confluences with Snow Creek. No physical evidence was observed at any of the inspected locations to indicate any impact to waterways from the incident and potential for diesel fuel release. The promptness and efficiency of the clean-up appears to have been adequate to manage potential environmental impacts from the incident.

Jerry O. Hopper
R.S. Williams & Associates

APPENDIX Z3

Borrow Source Incident Report

Incident Report

*(use this form to report **non-employee** injuries and property damage)*
Please be as accurate as possible. We encourage reporting of all incidents.

Date: 8 SEP 15 Time of accident: UNKOWN

Name of person reporting incident (please print): JASON W. JOINER

Street Address 702 CLYDALE A

City ANNISTON State AL Phone #: 256-499-6948

COMPLETE THIS SECTION IF THERE WAS AN INJURY:

Type of Bodily Injury (If any): NON

The injured person(s) is a:

Location of ~~accident~~ INCIDENT: BORROW AREA ACROSS FROM SOLUTIA

Name(s) of Person(s) injured:

Describe exactly what happened: ON TUESDAY 8 SEP. IT WAS REPORTED THAT THE CHIPS STOCK PILE WAS ON FIRE. AFTER INVESTIGATING FURTHER. I WAS INFORMED THAT THE FIRE HAD BE FIRST NOTICED ON SAT. 5 SEP 15. BY THE FIRE DEPARTMENT. THE ANNISTON FIRE DEPT. WAS CALLED AND A REPORT HAD BEEN MADE FOR SAT, SUN AND ON MONDAY. THE REPORTS WILL BE READY FOR PICKUP BY WED. 9 SEPT. 15. NO DAMAGE WAS NOTICED ON ANY TC EQUIPMENT OR ANY OTHER ITEMS OTHER THAN THE CHIP PILE.

Signature: _____ **Date:** 8 SEPT. 15

SEE ATT.
REPORTS

Anniston Fire Department

Station: **4**
Shifts Or Platoon: **A Shift**

Location: **1836 Al Hwy 202** **Anniston AL 36203** Lat/Long: **N 33° 36' 36.39"** **W 85° 55' 43.35"** Zone: **3 - Ward 3** Location Type: **1 - Street address**		Incident Type: **561 - Unauthorized burning** FDID: **01101** Incident #: **2015-4371** Exposure ID: **13918987** Exposure #: **0** Incident Date: **09/06/2015**

Report Completed by:	Crider , Keith Lamar	**ID:** 42	**Date:** 09/06/2015	
Report Reviewed by:	Meherg , Katherine D	**ID:** 13	**Date:** 09/08/2015	
Report Printed by:	Collins, John C	**ID:** 5	**Date:** 9/9/2015	**Time:** 12:27

Structure Type:	Property Use: **936 - Vacant lot**		
Automatic Extinguishment System Present: ☐	Detectors Present: ☐	Cause of Ignition:	
Aid Given or Received: **None**	Primary action taken:	**86 - Investigate**	

Losses	**Pre-Incident Values**				
Property:	Property:	Civilian Injuries:	**0**	Fire Service Injuries:	**0**
Contents:	Contents:	Civilian Fatalities:	**0**	Fire Service Fatalities:	**0**
Total:	Total:	Total Casualties:	**0**	Total Fire Service Casualties:	**0**

Total # of apparatus on call: **2** Total # of personnel on call: **6**

NARRATIVE

Responded to a concern of smoke. Arrived on scene to find a large mulch pile burning in a construction area. There was a substantial fire brake around the pile and no hazards in the area. E-4 personnel did not extinguish fire. E-2 responded to the call first but stopped to assist a overturned tractor.

APPARATUS

Unit	E-4	**Unit**	E-2
Type:	Engine	**Type:**	Engine
Use:	Suppression	**Use:**	Suppression
Response Mode:	No Lights or Sirens	**Response Mode:**	No Lights or Sirens
# of People	3	**# of People**	3
Alarm	09 /06/2015 13:59:30	**Alarm**	09 /06/2015 13:59:30
Dispatched	09 /06/2015 14:04:44	**Dispatched**	09 /06/2015 13:59:33
Enroute	09 /06/2015 14:05:24	**Enroute**	09 /06/2015 14:00:23
Arrived	09 /06/2015 14:11:59	**Arrived**	-- / -- / -- -- : -- : --
Cancelled	-- / -- / -- -- : -- : --	**Cancelled**	09 /06/2015 14:04:39
Cleared Scene	09 /06/2015 14:34:52	**Cleared Scene**	-- / -- / -- -- : -- : --
In Quarters	-- / -- / -- -- : -- : --	**In Quarters**	-- / -- / -- -- : -- : --
In Service	-- / -- / -- -- : -- : --	**In Service**	-- / -- / -- -- : -- : --

Number Of People not on apparatus: 0

Member Making Report (Sergeant Keith Lamar Crider): _____

Anniston Fire Department
Station: **2**
Shifts Or Platoon: **B Shift**

Location: **1836 Al Hwy 202** **ANNISTON AL 36201** Lat/Long: **N 33° 36' 36.39"** **W 85° 55' 43.35"** Zone: **5 - Police Jurisdiction** Location Type: **1 - Street address**	Incident Type: **140 - Natural vegetation fire, other** FDID: **01101** Incident #: **2015-4405** Exposure ID: **13927087** Exposure #: **0** Incident Date: **09/08/2015**

Report Completed by:	Arnold , Eric B.	**ID:** 12	**Date:** 09/08/2015
Report Reviewed by:	Arnold , Eric B.	**ID:** 12	**Date:** 09/08/2015
Report Printed by:	Collins, John C	**ID:** 5	**Date:** 9/9/2015 **Time:** 12:28

Structure Type:	Property Use: **981 - Construction site**				
Automatic Extinguishment System Present: ☐		Detectors Present: ☐		Cause of Ignition: **Unintentional**	
Aid Given or Received:	**None**	Primary action taken:	**86 - Investigate**		
Losses	**Pre-Incident Values**				
Property:	Property:	Civilian Injuries:	**0**	Fire Service Injuries:	**0**
Contents:	Contents:	Civilian Fatalities:	**0**	Fire Service Fatalities:	**0**
Total:	Total:	Total Casualties:	**0**	Total Fire Service Casualties:	**0**
Total # of apparatus on call:		**1**	Total # of personnel on call:		**3**

NARRATIVE

E2 responded to unauthorized burn. Incident occurred on Eastman property being cleared. All wood from felled trees were run through a wood chipper, chips were piled on Friday (09/04/2015) afternoon in a large cleared area, void of debris. Over the weekend the wood chips appeared to have produced enough heat through vegetative decomposition to ignite the wood chips sometime on Sunday (09/06/2015). When the work crew arrived at work site Tuesday (09/08/2015) the smoldering wood chips were discovered. Due to the fact the pile of wood chips was approximately seventy-five feet in diameter and twenty feet high, with approximately two feet of ash covering the pile, it was determined that the best course of action was to allow the wood chips to burn themselves out. The work crew had a one thousand gallon tanker available on site and were going to monitor the pile throughout the day. They were instructed to notify Anniston Fire Dept. if they should require assistance at anytime with the situation.

APPARATUS	
Unit	E-2
Type:	Engine
Use:	Suppression
Response Mode:	No Lights or Sirens
# of People	3
Alarm	09 /08/2015 06:39:18
Dispatched	09 /08/2015 06:39:22
Enroute	09 /08/2015 06:39:30
Arrived	09 /08/2015 06:48:02
Cancelled	-- / -- / -- -- : -- : --
Cleared Scene	09 /08/2015 07:15:50
In Quarters	-- / -- / -- -- : -- : --
In Service	09 /08/2015 07:15:50
Number Of People not on apparatus: 0	

FIRE			
Acres Burned	None or Less Than One	**Acres Burn From Wildland Form**	False
Material			
Sawdust, wood chips			
Storage Use			
Bulk storage or warehousing			
Area Of Fire Origin	Construction/renovation area	**Heat Source**	Spontaneous combustion, chemical reaction
Item First Ignited	Organic materials, other	**Fire Is Confined To Object Of Origin**	
Type Of Material	Wood chips, sawdust, shavings	**Cause Of Ignition**	Unintentional
Factor Contributing To Ignition	Natural condition, other		
Human Factors Contributing	None		

PEOPLE -- PERSON 1			
Is Owner	False	**Business Name**	Eastman
Telephone Number		**Involvement**	Called for assistance
Address			

Member Making Report (Captain Eric B. Arnold): _____

Supervisor (Captain Eric B. Arnold): _____

Established in 1960, Golder Associates is a global, employee-owned organization that helps clients find sustainable solutions to the challenges of finite resources, energy and water supply and management, waste management, urbanization, and climate change. We provide a wide range of independent consulting, design, and construction services in our specialist areas of earth, environment, and energy. By building strong relationships and meeting the needs of clients, our people have created one of the most trusted professional services organizations in the world.

Africa	+ 27 11 254 4800
Asia	+ 852 2562 3658
Australasia	+ 61 3 8862 3500
Europe	+ 356 21 42 30 20
North America	+ 1 800 275 3281
South America	+ 56 2 2616 2000

solutions@golder.com
www.golder.com

Golder Associates Inc.
3730 Chamblee Tucker Road
Atlanta, GA 30341 USA
Tel: (770) 496-1893
Fax: (770) 934-9476

Golder Associates

Engineering Earth's Development, Preserving Earth's Integrity

Golder, Golder Associates and the GA globe design are trademarks of Golder Associates Corporation